WTC
Drawing Book 2

2-A1-1 thru 2-A1-13,
2-B1-1 thru 2-B1-13,
2-AB2-1 thru 2-AB2-36,
SA-125 thru SA-138,
SB-125 through SB-128

WORTHINGTON, SKILLING, HELLE & JACKSON · Civil & Structural Engineers

PROJECT: THE WORLD TRADE CENTER | TITLE: EXTERIOR WALL - TREE - SCHEDULE NOTES | DATE: 7-25-67

REVISIONS
1-3-69
2-3-69
3-3-69
4-1-69
Printed 5-1-69

PNL NO	LEVEL B COLUMN 1 TYPE	FYB1	FYB2	FYB6	WELD 3	LEVEL B COLUMN 2 TYPE	FYB1	FYB2	FYB6	WELD 3	LEVEL B COLUMN 3 TYPE	FYB1	FYB2	FYB6	WELD 3	UPPER COL. SPLICE COL.1	COL.2	COL.3
(1)	(2)	(3)	(4)	(3)	(5)	(2)	(3)	(4)	(3)	(5)	(2)	(3)	(4)	(3)	(5)	(6)	(6)	(6)

PNL NO	LEVEL C COL.1 TYPE	FYC1	FYC2	LEVEL C COL.2 TYPE	FYC1	FYC2	LEVEL C COL.3 TYPE	FYC1	FYC2
(1)	(7)	(3)	(3)	(7)	(3)	(3)	(7)	(3)	(3)

PNL NO	LEVEL D COLUMN 1 TYPE	FYD1	FYD2	FYD5	FYD6	WELD 2	LEVEL D COLUMN 2 TYPE	FYD1	FYD2	FYD5	WELD 2	LEVEL D COLUMN 3 TYPE	FYD1	FYD2	FYD5	FYD6	WELD 2
(1)	(8)	(3)	(3)	(3)	(3)	(9)	(8)	(3)	(3)	(3)	(9)	(8)	(3)	(3)	(3)	(3)	(9)

PNL NO	LEVEL E	TYPE	FYE1	FYE2	FYE3	FYE4	FYE5	FYE6	FYE7	FYE8	WELD 5	WELD 6	WELD 7	LEVEL F	TYPE	FYF1	FYF2	LCS
(1)		(10)	(3)	(3)	(3)	(3)	(3)	(3)	(3)	(3)	(11)	(11)	(11)		(12)	(3)	(3)	(13)

PNL NO	SPANDREL LEVEL B TB4	FYB4	SCL	SCR	SEAT DETAILS COL.1	COL.2	COL.3	SPANDREL LEVEL D TD4	FYD4	TD7	FYD7	TD8	FYD8	WELD 8	SCL	SCR	SEAT DETAILS COL.1	COL.2	COL.3
(1)	(14)	(3)	(15)	(16)	(17)	(17)	(17)	(18)	(3)	(18)	(3)	(18)	(3)	(19)	(20)	(21)	(17)	(17)	(17)

(1) PANEL NUMBER - IDENTIFIED BY COLUMN NUMBER FOR CENTER COLUMN OF PANEL AND TOWER DESIGNATION A OR B
(NOTE) PANELS ARE SHOWN FROM INSIDE OF BUILDING LOOKING OUT. FOR PANEL ELEVATION SEE 2-AB2-2
SCHEDULED COLUMN 1 IS THE LEFT COLUMN, COLUMN 2 THE MIDDLE COLUMN AND COLUMN 3 THE RIGHT COLUMN
(2) COLUMN TYPE. FOR DIMENSIONS, PLATE THICKNESSES AND WELDS - SEE 2-AB2-4 THRU 6
(3) REQUIRED YIELD STRENGTH FOR INDICATED PLATE (KSI)
(4) REQUIRED YIELD STRENGTH FOR PLATE B2 AND B3 (KSI)
(5) WELD SIZE (INCHES) SEE 2-AB2-4 FOR LOCATION
(6) DETAIL NUMBER FOR UPPER COLUMN SPLICE - SEE 2-AB2-25 THRU 27
(7) COLUMN TYPE. FOR DIMENSIONS, PLATE THICKNESSES AND WELDS - SEE 2-AB2-7
(8) COLUMN TYPE. FOR DIMENSIONS, PLATE THICKNESSES AND WELDS - SEE 2-AB2-8 THRU 11
(9) WELD SIZE (INCHES) SEE 2-AB2-8 FOR LOCATION
(10) ASSEMBLY TYPE. FOR DIMENSIONS, PLATE THICKNESSES AND WELDS - SEE 2-AB2-12 THRU 15
(11) WELD SIZE (INCHES) SEE 2-AB2-13 FOR LOCATION
(12) COLUMN TYPE. FOR DIMENSIONS, PLATE THICKNESSES AND WELDS - SEE 2-AB2-16
(13) DETAIL NUMBER FOR LOWER COLUMN SPLICE - SEE 2-AB2-29 AND 30
(14) THICKNESS OF PLATE B4 (INCHES) SEE 2-AB2-4 FOR DETAILS
(15) DETAIL NUMBER FOR LEFT SPANDREL CONNECTION - SEE 2-AB2-23
(16) DETAIL NUMBER FOR RIGHT SPANDREL CONNECTION - SEE 2-AB2-23
(17) DETAIL NUMBER FOR BEAM AND BRACING SEAT DETAILS - SEE 2-AB2-31 THRU 36
(18) THICKNESS OF PLATE INDICATED - SEE 2-AB2- 8 THRU 11 FOR DETAILS
(19) WELD SIZE (INCHES) SEE 2-AB2- 8 THRU 11 FOR LOCATION
(20) DETAIL NUMBER FOR LEFT SPANDREL CONNECTION - SEE 2-AB2-24
(21) DETAIL NUMBER FOR RIGHT SPANDREL CONNECTION - SEE 2-AB2-24

LICENSED PROFESSIONAL ENGINEER LESLIE E. ROBERTSON No. 34360 UNIVERSITY OF THE STATE OF NEW YORK

WTCI-12-LERA

54

SKILLING-HELLE-CHRISTIANSEN-ROBERTSON — **Civil & Structural Engineers**

PROJECT: THE WORLD TRADE CENTER

TITLE: EXTERIOR WALL - TREE - SCHEDULE WALL 100

DATE: 12-18-67

REVISIONS

PNL NO	LEVEL B COLUMN 1 TYPE	FYB1	FYB2	FYB6	WELD 3	LEVEL B COLUMN 2 TYPE	FYB1	FYB2	FYB6	WELD 3	LEVEL B COLUMN 3 TYPE	FYB1	FYB2	FYB6	WELD 3	UPPER COL. SPLICE COL.1	COL.2	COL.3
103A	B06	50	50	50	1/2	B08	42	42	42	1/2	B11	42	42	42	1/2	102	102	103
106A	B12	36	36	36	1/2	B13	36	36	36	1/2	B14	36	36	36	1/2	103	103	103
109A	B15	36	36	36	1/2	B16	36	36	36	1/2	B17	36	36	36	1/2	103	103	103
112A	B17	36	36	36	1/2	B17	36	36	36	1/2	B17	36	36	36	1/2	103	103	103
115A	B17	36	36	36	1/2	B17	36	36	36	1/2	B17	36	36	36	1/2	103	103	103
118A	B17	36	36	36	1/2	B17	36	36	36	1/2	B17	36	36	36	1/2	103	103	103

PNL NO	LEVEL C COL.1 TYPE	FYC1	FYC2	LEVEL C COL.2 TYPE	FYC1	FYC2	LEVEL C COL.3 TYPE	FYC1	FYC2
103A	C06	50	50	C08	42	42	C11	42	42
106A	C12	36	36	C13	36	36	C14	36	36
109A	C15	36	36	C16	36	36	C17	36	36
112A	C17	36	36	C17	36	36	C17	36	36
115A	C17	36	36	C17	36	36	C17	36	36
118A	C17	36	36	C17	36	36	C17	36	36

PNL NO	LEVEL D COLUMN 1 TYPE	FYD1	FYD2	FYD5	FYD6	WELD 2	LEVEL D COLUMN 2 TYPE	FYD1	FYD2	FYD5	WELD 2	LEVEL D COLUMN 3 TYPE	FYD1	FYD2	FYD5	FYD6	WELD 2
103A	D06	50	50	36	36	3/8	D06	45	45	36	3/8	D06	42	42	36	36	3/8
106A	D07	36	36	36	36	3/8	D07	36	36	36	3/8	D07	36	36	36	36	3/8
109A	D08	36	36	36	36	1/2	D08	36	36	36	1/2	D08	36	36	36	36	1/2
112A	D09	36	36	36	36	1/2	D09	36	36	36	1/2	D09	36	36	36	36	1/2
115A	D09	36	36	36	36	1/2	D09	36	36	36	1/2	D09	36	36	36	36	1/2
118A	D09	36	36	36	36	1/2	D09	36	36	36	1/2	D09	36	36	36	36	1/2

PNL NO	LEVEL E TYPE	FYE1	FYE2	FYE3	FYE4	FYE5	FYE6	FYE7	FYE8	WELD 5	WELD 6	WELD 7	LEVEL F TYPE	FYF1	FYF2	LCS
103A	E09	45	45	36	36	45	45	42	36	3/8	3/8	3/8	F09	45	45	702
106A	E13	42	42	36	36	42	42	36	36	3/8	3/8	3/8	F13	42	42	703
109A	E16	42	42	36	36	42	42	36	36	3/8	3/8	3/8	F16	42	42	704
112A	E17	42	42	36	36	42	42	36	36	3/8	3/8	3/8	F17	42	42	704
115A	E17	42	42	36	36	42	42	36	36	3/8	3/8	3/8	F17	42	42	704
118A	E17	36	36	36	36	36	36	36	36	3/8	3/8	3/8	F17	36	36	704

PNL NO	SPANDREL LEVEL B TB4	FYB4	SCL	SCR	SEAT DETAILS COL.1	COL.2	COL.3	SPANDREL LEVEL D TD4	FYD4	TD7	FYD7	TD8	FYD8	WELD 8	SCL	SCR	SEAT DETAILS COL.1	COL.2	COL.3
103A	1-3/8	36	B13	B12	94	95	98	1-1/2	42	1/2	36	3/4	36	3/8	D13	D12	76	74	76
106A	1-3/8	36	B12	B12	90	97	91	1-1/2	42	5/8	36	3/4	36	3/8	D12	D13	70	76	71
109A	1-3/8	36	B12	B12	98	91	98	1-1/2	42	3/4	36	7/8	36	3/8	D13	D13	76	71	76
112A	1-3/8	36	B12	B12	91	98	91	1-1/2	42	3/4	36	1	36	3/8	D13	D12	71	76	71
115A	1-3/8	36	B12	B12	97	91	97	1-1/2	42	3/4	36	1	36	3/8	D12	D12	76	71	76
118A	1-3/8	36	B12	B12	91	98	91	1-1/2	42	3/4	36	1	36	3/8	D12	D12	71	76	71

LICENSED PROFESSIONAL ENGINEER LESLIE E. ROBERTSON No. 34360 UNIVERSITY OF THE STATE OF NEW YORK

WORTHINGTON, SKILLING, HELLE & JACKSON — **Civil & Structural Engineers**

PROJECT: THE WORLD TRADE CENTER | TITLE: EXTERIOR WALL - TREE - SCHEDULE WALL 100 | DATE: 7-28-67

REVISIONS

PNL NO	LEVEL B COLUMN 1 TYPE	FYB1	FYB2	FYB6	WELD 3	LEVEL B COLUMN 2 TYPE	FYB1	FYB2	FYB6	WELD 3	LEVEL B COLUMN 3 TYPE	FYB1	FYB2	FYB6	WELD 3	UPPER COL. SPLICE COL.1	COL.2	COL.3
121A	B17	36	36	36	1/2	B17	36	36	36	1/2	B17	36	36	36	1/2	103	103	103
124A	B17	36	36	36	1/2	B17	36	36	36	1/2	B17	36	36	36	1/2	103	103	103
127A	B17	36	36	36	1/2	B17	36	36	36	1/2	B18	36	36	36	1/2	103	103	103
130A	B18	36	36	36	1/2	B19	36	36	36	1/2	B19	36	36	36	1/2	103	103	103
133A	B19	36	36	36	1/2	B19	36	36	36	1/2	B19	36	36	36	1/2	103	103	103
136A	B19	42	42	42	1/2	B19	42	42	42	1/2	B19	42	42	42	1/2	103	103	103
139A	B19	42	42	42	1/2	B19	42	42	42	1/2	B19	42	42	42	1/2	103	103	103

PNL NO	LEVEL C COL.1 TYPE	FYC1	FYC2	LEVEL C COL.2 TYPE	FYC1	FYC2	LEVEL C COL.3 TYPE	FYC1	FYC2
121A	C17	36	36	C17	36	36	C17	36	36
124A	C17	36	36	C17	36	36	C17	36	36
127A	C17	36	36	C17	36	36	C18	36	36
130A	C18	36	36	C19	36	36	C19	36	36
133A	C19	36	36	C19	36	36	C19	36	36
136A	C19	42	42	C19	42	42	C19	42	42
139A	C19	42	42	C19	42	42	C19	42	42

PNL NO	LEVEL D COLUMN 1 TYPE	FYD1	FYD2	FYD5	FYD6	WELD 2	LEVEL D COLUMN 2 TYPE	FYD1	FYD2	FYD5	WELD 2	LEVEL D COLUMN 3 TYPE	FYD1	FYD2	FYD5	FYD6	WELD 2
121A	D09	36	36	36	36	1/2	D09	36	36	36	1/2	D09	36	36	36	36	1/2
124A	D09	36	36	36	36	1/2	D09	36	36	36	1/2	D09	36	36	36	36	1/2
127A	D10	36	36	36	36	1/2	D10	36	36	36	1/2	D10	36	36	36	36	1/2
130A	D11	36	36	36	36	1/2	D11	36	36	36	1/2	D11	36	36	36	36	1/2
133A	D11	36	36	36	36	1/2	D11	36	36	36	1/2	D11	36	36	36	36	1/2
136A	D11	42	42	36	36	1/2	D11	42	42	36	1/2	D11	42	42	36	36	1/2
139A	D11	42	42	36	36	1/2	D11	42	42	36	1/2	D11	42	42	36	36	1/2

PNL NO	LEVEL E TYPE	FYE1	FYE2	FYE3	FYE4	FYE5	FYE6	FYE7	FYE8	WELD 5	WELD 6	WELD 7	LEVEL F TYPE	FYF1	FYF2	LCS
121A	E17	36	36	36	36	36	36	36	36	3/8	3/8	3/8	F17	36	36	704
124A	E17	36	36	36	36	36	36	36	36	3/8	3/8	3/8	F17	36	36	704
127A	E18	36	36	36	36	36	36	36	36	3/8	3/8	3/8	F18	36	36	704
130A	E19	36	36	36	36	36	36	36	36	3/8	3/8	3/8	F19	36	36	704
133A	E19	42	42	36	36	42	42	36	36	3/8	3/8	3/8	F19	42	42	704
136A	E19	42	42	36	36	42	42	36	36	3/8	3/8	3/8	F19	42	42	704
139A	E19	42	42	36	36	42	42	36	36	3/8	3/8	3/8	F19	42	42	704

PNL NO	SPANDREL LEVEL B T64	FYB4	SCL	SCR	SEAT DETAILS COL.1	COL.2	COL.3	SPANDREL LEVEL D TD4	FYD4	TD7	FYD7	TD8	FYD8	WELD 8	SCL	SCR	SEAT DETAILS COL.1	COL.2	COL.3
121A	1-3/8	36	B12	B12	98	91	98	1-1/2	42	3/4	36	1	36	3/8	D12	D12	76	71	76
124A	1-3/8	36	B12	B12	91	97	91	1-1/2	42	3/4	36	1	36	3/8	D12	D12	71	76	71
127A	1-3/8	36	B12	B12	97	91	98	1-1/2	42	3/4	36	1	36	3/8	D12	D12	76	71	76
130A	1-3/8	36	B12	B12	91	98	91	1-1/2	42	3/4	36	1	36	3/8	D12	D12	71	76	70
133A	1-3/8	36	B12	B12	98	91	97	1-1/2	42	3/4	36	1	36	3/8	D12	D12	76	70	76
136A	1-3/8	36	B12	B12	91	97	91	1-1/2	42	3/4	36	1	36	3/8	D12	D12	71	76	70
139A	1-3/8	36	B12	B12	98	91	98	1-1/2	42	3/4	36	1	36	3/8	D12	D12	76	70	76

LICENSED PROFESSIONAL ENGINEER LESLIE E. ROBERTSON No. 34360 UNIVERSITY OF THE STATE OF NEW YORK

SKILLING-HELLE-CHRISTIANSEN-ROBERTSON — **Civil & Structural Engineers**

PROJECT: THE WORLD TRADE CENTER

TITLE: EXTERIOR WALL - TREE - SCHEDULE WALL 100

DATE: 12-18-67

REVISIONS

PNL NO	LEVEL 8 COLUMN 1 TYPE	FY81	FYB2	FY86	WELD 3	LEVEL B COLUMN 2 TYPE	FY81	FYB2	FY86	WELD 3	LEVEL 8 COLUMN 3 TYPE	FY81	FYB2	FYB6	WELD 3	UPPER COL. SPLICE COL.1	COL.2	COL.3
142A	818	42	42	42	1/2	818	42	42	42	1/2	817	42	42	42	1/2	103	103	103
145A	817	36	36	36	1/2	B17	36	36	36	1/2	817	36	36	36	1/2	103	103	103
148A	817	36	36	36	1/2	B17	36	36	36	1/2	817	36	36	36	1/2	103	103	103
151A	817	36	36	36	1/2	B16	36	36	36	1/2	B15	36	36	36	1/2	103	103	103
154A	B14	36	36	36	1/2	B13	36	36	36	1/2	812	36	36	36	1/2	103	103	103
157A	B11	42	42	42	1/2	808	45	45	45	1/2	B06	50	50	50	1/2	103	102	102

PNL NO	LEVEL C COL.1 TYPE	FYC1	FYC2	LEVEL C COL.2 TYPE	FYC1	FYC2	LEVEL C COL.3 TYPE	FYC1	FYC2
142A	C18	42	42	C18	42	42	C17	42	42
145A	C17	36	36	C17	36	36	C17	36	36
148A	C17	36	36	C17	36	36	C17	36	36
151A	C17	36	36	C16	36	36	C15	36	36
154A	C14	36	36	C13	36	36	C12	36	36
157A	C11	42	42	C08	45	45	C06	50	50

PNL NO	LEVEL D COLUMN 1 TYPE	FYD1	FYD2	FYD5	FYD6	WELD 2	LEVEL D COLUMN 2 TYPE	FYD1	FYD2	FYD5	WELD 2	LEVEL D COLUMN 3 TYPE	FYD1	FYD2	FYD5	FYD6	WELD 2
142A	D10	42	42	36	36	1/2	D10	42	42	36	1/2	D10	42	42	36	36	1/2
145A	D09	36	36	36	36	1/2	D09	36	36	36	1/2	D09	36	36	36	36	1/2
148A	D09	36	36	36	36	1/2	D09	36	36	36	1/2	D09	36	36	36	36	1/2
151A	D08	36	36	36	36	1/2	D08	36	36	36	1/2	D08	36	36	36	36	1/2
154A	D07	36	36	36	36	3/8	D07	36	36	36	3/8	D07	36	36	36	36	3/8
157A	D06	42	42	36	36	3/8	D06	45	45	36	3/8	D06	50	50	36	36	3/8

PNL NO	LEVEL E TYPE	FYE1	FYE2	FYE3	FYE4	FYE5	FYE6	FYE7	FYE8	WELD 5	WELD 6	WELD 7	LEVEL F TYPE	FYF1	FYF2	LCS
142A	E18	42	42	36	36	42	42	36	36	3/8	3/8	3/8	F18	42	42	704
145A	E17	42	42	36	36	42	42	36	36	3/8	3/8	3/8	F17	42	42	704
148A	E17	42	42	36	36	42	42	36	36	3/8	3/8	3/8	F17	42	42	704
151A	E16	45	45	36	36	45	45	36	36	3/8	3/8	3/8	F16	45	45	704
154A	E13	45	45	36	36	45	45	36	36	3/8	3/8	3/8	F13	45	45	703
157A	E09	50	50	45	45	50	50	45	45	3/8	3/8	3/8	F09	50	50	702

PNL NO	SPANOREL LEVEL B T84	FY84	SCL	SCR	SEAT DETAILS COL.1	COL.2	COL.3	SPANDREL LEVEL D TD4	FYD4	TD7	FYD7	TD8	FYD8	WELD 8	SCL	SCR	SEAT DETAILS COL.1	COL.2	COL.3
142A	1-3/8	36	B12	B12	91	98	91	1-1/2	42	3/4	36	1	36	3/8	D12	D12	71	76	71
145A	1-3/8	36	812	812	97	91	97	1-1/2	42	3/4	36	1	36	3/8	D12	D12	76	71	76
148A	1-3/8	36	812	812	91	98	91	1-1/2	42	3/4	36	1	36	3/8	D12	D12	71	76	71
151A	1-3/8	36	B12	812	98	91	98	1-1/2	42	3/4	36	1	36	3/8	D12	D12	76	71	76
154A	1-3/8	36	B12	312	91	97	90	1-1/2	42	5/8	36	7/8	36	3/8	D12	D12	71	76	70
157A	1-3/8	36	B12	B13	98	95	94	1-1/2	42	1/2	36	3/4	36	3/8	D12	D13	76	74	76

LICENSED PROFESSIONAL ENGINEER LESLIE E. ROBERTSON No. 34360 UNIVERSITY OF THE STATE OF NEW YORK

SKILLING-HELLE-CHRISTIANSEN-ROBERTSON — **Civil & Structural Engineers**

PROJECT: THE WORLD TRADE CENTER

TITLE: EXTERIOR WALL - TREF - SCHEDULE WALL 200

DATE: 12-18-67

REVISIONS

PNL NO	LEVEL B COLUMN 1 TYPE	FYB1	FYB2	FYB6	WELD 3	LEVEL B COLUMN 2 TYPE	FYB1	FYB2	FYB6	WELD 3	LEVEL B COLUMN 3 TYPE	FYB1	FYB2	FYB6	WELD 3	UPPER COL. SPLICE COL.1	COL.2	COL.3
203A	B02	55	55	50	3/8	B03	50	50	50	3/8	B03	45	45	45	3/8	102	102	102
206A	B03	45	45	45	3/8	B03	45	45	45	3/8	B03	45	45	45	3/8	102	102	102
209A	B03	45	45	45	3/8	B03	45	45	45	3/8	B04	45	45	45	3/8	102	102	102
212A	B04	45	45	45	3/8	B05	45	45	45	3/8	B05	45	45	45	3/8	102	102	102
215A	B06	45	45	45	3/8	B07	45	45	45	3/8	B08	45	45	45	1/2	102	102	102
218A	B10	45	45	45	1/2	B10	45	45	45	1/2	B10	45	45	45	1/2	103	103	103

PNL NO	LEVEL C COL.1 TYPE	FYC1	FYC2	LEVEL C COL.2 TYPE	FYC1	FYC2	LEVEL C COL.3 TYPE	FYC1	FYC2
203A	C02	55	55	C03	50	50	C03	45	45
206A	C03	45	45	C03	45	45	C03	45	45
209A	C03	45	45	C03	45	45	C04	45	45
212A	C04	45	45	C05	45	45	C05	45	45
215A	C06	45	45	C07	45	45	C08	45	45
218A	C10	45	45	C10	45	45	C10	45	45

PNL NO	LEVEL D COLUMN 1 TYPE	FYD1	FYD2	FYD5	FYD6	WELD 2	LEVEL D COLUMN 2 TYPE	FYD1	FYD2	FYD5	WELD 2	LEVEL D COLUMN 3 TYPE	FYD1	FYD2	FYD5	FYD6	WELD 2
203A	D02	55	55	36	36	3/8	D02	50	50	36	3/8	D02	45	45	36	36	3/8
206A	D02	45	45	36	36	3/8	D02	45	45	36	3/8	D02	45	45	36	36	3/8
209A	D02	45	45	36	36	3/8	D02	45	45	36	3/8	D02	45	45	36	36	3/8
212A	D03	45	45	36	36	3/8	D03	45	45	36	3/8	D03	45	45	36	36	3/8
215A	D04	45	45	36	36	3/8	D04	45	45	36	3/8	D04	45	45	36	36	3/8
218A	D05	45	45	36	36	3/8	D05	45	45	36	3/8	D05	45	45	36	36	3/8

PNL NO	LEVEL E	TYPE	FYE1	FYE2	FYE3	FYE4	FYE5	FYE6	FYE7	FYE8	WELD 5	WELD 6	WELD 7	LEVEL F	TYPE	FYF1	FYF2	LCS
203A		E04	45	45	36	36	45	45	36	36	3/8	3/8	3/8		F04	45	45	701
206A		E05	45	45	36	36	45	45	36	36	3/8	3/8	3/8		F05	45	45	701
209A		E05	45	45	36	36	45	45	36	36	3/8	3/8	3/8		F05	45	45	701
212A		E06	45	45	36	36	45	45	36	36	3/8	3/8	3/8		F06	45	45	701
215A		E07	45	45	36	36	45	45	36	36	3/8	3/8	3/8		F07	45	45	701
218A		E11	45	45	36	36	45	45	36	36	3/8	3/8	3/8		F11	45	45	702

PNL NO	SPANOREL LEVEL B TB4	FYB4	SCL	SCR	SEAT DETAILS COL.1	COL.2	COL.3	SPANDREL LEVEL D TD4	FYD4	TD7	FYD7	TD8	FYD8	WELD 8	SCL	SCR	SEAT DETAILS COL.1	COL.2	COL.3
203A	1-3/8	36	B13	B12	93	98	96	1-1/2	42	1/2	36	5/8	36	3/8	D13	D12	73	76	73
206A	1-3/8	36	B12	B12	97	93	97	1-1/2	42	1/2	36	5/8	36	3/8	D12	D12	76	75	76
209A	1-3/8	36	B12	B12	96	98	93	1-1/2	42	1/2	36	5/8	36	3/8	D12	D11	73	76	73
212A	1-3/8	36	B12	B12	98	96	98	1-1/2	42	1/2	36	3/4	36	3/8	D11	D11	76	73	76
215A	1-3/8	36	B12	B12	93	97	96	1-1/2	42	1/2	36	3/4	36	3/8	D11	D11	73	76	73
218A	1-3/8	36	B12	B12	90	98	92	1-1/2	42	1/2	36	7/8	36	3/8	D11	D12	70	76	72A

LICENSED PROFESSIONAL ENGINEER LESLIE E. ROBERTSON No. 34360 UNIVERSITY OF THE STATE OF NEW YORK

SKILLING-HELLE-CHRISTIANSEN-ROBERTSON — **Civil & Structural Engineers**

PROJECT: THE WORLD TRADE CENTER

TITLE: EXTERIOR WALL - TREE - SCHEDULE WALL 200

DATE: 12-18-67

REVISIONS

PNL NO	LEVEL B COLUMN 1 TYPE	FYB1	FYB2	FYB6	WELD 3	LEVEL B COLUMN 2 TYPE	FYB1	FYB2	FYB6	WELD 3	LEVEL B COLUMN 3 TYPE	FYB1	FYB2	FYB6	WELD 3	UPPER COL. SPLICE COL.1	COL.2	COL.3
221A	B10	45	45	45	1/2	B09	45	45	45	1/2	B08	45	45	45	1/2	103	102	102
224A	B07	45	45	45	1/2	B07	45	45	45	1/2	B07	45	45	45	1/2	102	102	102
227A	B07	45	45	45	1/2	B07	45	45	45	1/2	B07	45	45	45	1/2	102	102	102
230A	B07	45	45	45	1/2	B07	45	45	45	1/2	B07	45	45	45	1/2	102	102	102
233A	B07	45	45	45	1/2	B07	45	45	45	1/2	B07	45	45	45	1/2	102	102	102
236A	B07	45	45	45	1/2	B07	45	45	45	1/2	B07	45	45	45	1/2	102	102	102
239A	B08	45	45	45	1/2	B09	45	45	45	1/2	B10	45	45	45	1/2	102	102	103

PNL NO	LEVEL C COL.1 TYPE	FYC1	FYC2	LEVEL C COL.2 TYPE	FYC1	FYC2	LEVEL C COL.3 TYPE	FYC1	FYC2
221A	C10	45	45	C09	45	45	C08	45	45
224A	C07	45	45	C07	45	45	C07	45	45
227A	C07	45	45	C07	45	45	C07	45	45
230A	C07	45	45	C07	45	45	C07	45	45
233A	C07	45	45	C07	45	45	C07	45	45
236A	C07	45	45	C07	45	45	C07	45	45
239A	C08	45	45	C09	45	45	C10	45	45

PNL NO	LEVEL D COLUMN 1 TYPE	FYD1	FYD2	FYD5	FYD6	WELD 2	LEVEL D COLUMN 2 TYPE	FYD1	FYD2	FYD5	WELD 2	LEVEL D COLUMN 3 TYPE	FYD1	FYD2	FYD5	FYD6	WELD 2
221A	D05	45	45	36	36	3/8	D05	45	45	36	3/8	D05	45	45	36	36	3/8
224A	D05	45	45	36	36	3/8	D05	45	45	36	3/8	D05	45	45	36	36	3/8
227A	D05	45	45	36	36	3/8	D05	45	45	36	3/8	D05	45	45	36	36	3/8
230A	D05	45	45	36	36	3/8	D05	45	45	36	3/8	D05	45	45	36	36	3/8
233A	D05	45	45	36	36	3/8	D05	45	45	36	3/8	D05	45	45	36	36	3/8
236A	D05	45	45	36	36	3/8	D05	45	45	36	3/8	D05	45	45	36	36	3/8
239A	D05	45	45	36	36	3/8	D05	45	45	36	3/8	D05	45	45	36	36	3/8

PNL NO	LEVEL E TYPE	FYE1	FYE2	FYE3	FYE4	FYE5	FYE6	FYE7	FYE8	WELD 5	WELD 6	WELD 7	LEVEL F TYPE	FYF1	FYF2	LCS
221A	E10	45	45	36	36	45	45	36	36	3/8	3/8	3/8	F10	45	45	702
224A	E08	50	50	45	45	50	50	45	45	3/8	3/8	3/8	F08	50	50	701
227A	E08	50	50	45	45	50	50	45	45	3/8	3/8	3/8	F08	50	50	701
230A	E08	50	50	45	45	50	50	45	45	3/8	3/8	3/8	F08	50	50	701
233A	E08	50	50	45	45	50	50	45	45	3/8	3/8	3/8	F08	50	50	701
236A	E08	50	50	45	45	50	50	45	45	3/8	3/8	3/8	F08	50	50	701
239A	E10	55	55	45	45	55	55	45	45	3/8	3/8	3/8	F10	55	55	702

PNL NO	SPANDREL LEVEL B TB4	FYB4	SCL	SCR	SEAT DETAILS COL.1	COL.2	COL.3	SPANDREL LEVEL D TD4	FYD4	TD7	FYD7	TD8	FYD8	WELD 8	SCL	SCR	SEAT DETAILS COL.1	COL.2	COL.3
221A	1-3/8	36	B12	B12	98	92	98	1-1/2	42	1/2	36	7/8	36	3/8	D12	D12	76	72A	76
224A	1-3/8	36	B12	B11	92	98	92	1-1/2	42	1/2	36	7/8	36	3/8	D12	D12	72A	76	72A
227A	1-3/8	36	B11	B11	97	92	98	1-1/2	42	1/2	36	7/6	36	3/8	D12	D12	76	72A	76
230A	1-3/8	36	B11	B11	92	98	92	1-1/2	42	1/2	36	7/8	36	3/8	D12	D12	72A	76	72A
233A	1-3/8	36	B11	B12	98	92	97	1-1/2	42	1/2	36	7/8	36	3/8	D12	D12	76	72A	76
236A	1-3/8	36	B12	B12	92	97	92	1-1/2	42	1/2	36	7/8	36	3/8	D12	D12	72A	76	72A
239A	1-3/8	36	B12	B12	98	92	98	1-1/2	42	1/2	36	7/8	36	3/8	D12	D12	76	72A	76

LICENSED PROFESSIONAL ENGINEER
LESLIE E. ROBERTSON
No. 34360
UNIVERSITY OF THE STATE OF NEW YORK

SKILLING-HELLE-CHRISTIANSEN-ROBERTSON — **Civil & Structural Engineers**

PROJECT: THE WORLD TRADE CENTER

TITLE: EXTERIOR WALL - TREE - SCHEDULE WALL 200

DATE: 12-18-67

REVISIONS

PNL NO	LEVEL B COLUMN 1 TYPE	FY81	FY82	FYB6	WELD 3	LEVEL B COLUMN 2 TYPE	FY81	FY82	FYB6	WELD 3	LEVEL B COLUMN 3 TYPE	FYB1	FY82	FY86	WELD 3	UPPER COL. SPLICE COL.1	COL.2	COL.3
242A	B10	45	45	45	1/2	B10	45	45	45	1/2	B10	45	45	45	1/2	103	103	103
245A	B08	45	45	45	1/2	B07	45	45	45	1/2	B06	45	45	45	3/8	102	102	102
248A	B05	45	45	45	3/8	B05	45	45	45	3/8	B04	45	45	45	3/8	102	102	102
251A	B04	45	45	45	3/8	B03	45	45	45	3/8	B03	45	45	45	3/8	102	102	102
254A	B03	45	45	45	3/8	B03	45	45	45	3/8	B03	45	45	45	3/8	102	102	102
257A	B03	45	45	45	3/8	B03	50	50	50	3/8	B02	55	55	55	3/8	102	102	102

PNL NO	LEVEL C COL.1 TYPE	FYC1	FYC2	LEVEL C COL.2 TYPE	FYC1	FYC2	LEVEL C COL.3 TYPE	FYC1	FYC2
242A	C10	45	45	C10	45	45	C10	45	45
245A	C08	45	45	C07	45	45	C06	45	45
248A	C05	45	45	C05	45	45	C04	45	45
251A	C04	45	45	C03	45	45	C03	45	45
254A	C03	45	45	C03	45	45	C03	45	45
257A	C03	45	45	C03	50	50	C02	55	55

PNL NO	LEVEL D COLUMN 1 TYPE	FYD1	FYD2	FYD5	FYD6	WELD 2	LEVEL D COLUMN 2 TYPE	FYD1	FYD2	FYD5	WELD 2	LEVEL D COLUMN 3 TYPE	FYD1	FYD2	FYD5	FYD6	WELD 2
242A	D05	45	45	36	36	3/8	D05	45	45	36	3/8	D05	45	45	36	36	3/8
245A	D04	45	45	36	36	3/8	D04	45	45	36	3/8	D04	45	45	36	36	3/8
248A	D03	45	45	36	36	3/8	D03	45	45	36	3/8	D03	45	45	36	36	3/8
251A	D02	45	45	36	36	3/8	D02	45	45	36	3/8	D02	45	45	36	36	3/8
254A	D02	45	45	36	36	3/8	D02	45	45	36	3/8	D02	45	45	36	36	3/8
257A	D02	45	45	36	36	3/8	D02	50	50	36	3/8	D02	55	55	36	36	3/8

PNL NO	LEVEL E TYPE	FYE1	FYE2	FYE3	FYE4	FYE5	FYE6	FYE7	FYE8	WELD 5	WELD 6	WELD 7	LEVEL F TYPE	FYF1	FYF2	LCS
242A	E11	55	55	45	45	55	55	45	45	3/8	3/8	3/8	F11	55	55	702
245A	E07	55	55	45	45	55	55	45	45	3/8	3/8	3/8	F07	55	55	701
248A	E06	60	60	45	45	60	60	45	45	3/8	3/8	3/8	F06	60	60	701
251A	E05	60	60	45	45	60	60	45	45	3/8	3/8	3/8	F05	60	60	701
254A	E05	60	60	45	45	60	60	45	45	3/8	3/8	3/8	F05	60	60	701
257A	E04	60	60	45	45	60	60	45	45	3/8	3/8	3/8	F04	60	60	701

PNL NO	SPANDREL LEVEL B TB4	FY84	SCL	SCR	SEAT DETAILS COL.1	COL.2	COL.3	SPANDREL LEVEL D TD4	FYD4	TD7	FYD7	TD8	FYD8	WELD 8	SCL	SCR	SEAT DETAILS COL.1	COL.2	COL.3
242A	1-3/8	36	B12	B12	92	98	90	1-1/2	42	1/2	36	7/8	36	3/8	D12	D11	72A	76	70
245A	1-3/8	36	B12	B12	96	97	93	1-1/2	42	1/2	36	3/4	36	3/8	D11	D11	73	76	73
248A	1-3/8	36	B12	B12	98	96	98	1-1/2	42	1/2	36	3/4	36	3/8	D11	D11	76	73	76
251A	1-3/8	36	B12	B12	93	98	96	1-1/2	42	1/2	36	5/8	36	3/8	D11	D13	73	76	73
254A	1-3/8	36	B12	B12	97	93	97	1-1/2	42	1/2	36	5/8	36	3/8	D13	D12	76	73	76
257A	1-3/8	36	B12	B13	96	98	93	1-1/2	42	1/2	36	5/8	36	3/8	D12	D12	73	76	73

LICENSED PROFESSIONAL ENGINEER LESLIE E. ROBERTSON No. 34360 UNIVERSITY OF THE STATE OF NEW YORK

WORTHINGTON, SKILLING, HELLE & JACKSON — Civil & Structural Engineers

PROJECT: THE WORLD TRADE CENTER | TITLE: EXTERIOR WALL - TYPE - SCHEDULE WALL 300 | DATE: 12-18-67

REVISIONS

PNL NO	LEVEL B COLUMN 1 TYPE	FYB1	FYB2	FYB6	WELD 3	LEVEL B COLUMN 2 TYPE	FYB1	FYB2	FYB6	WELD 3	LEVEL B COLUMN 3 TYPE	FYB1	FYB2	FYB6	WELD 3	UPPER COL. SPLICE COL.1	COL.2	COL.3
303A	B06	55	55	50	1/2	B06	50	50	50	1/2	B11	45	45	45	1/2	102	102	103
306A	B12	42	42	42	1/2	B13	42	42	42	1/2	B14	42	42	42	1/2	103	103	103
309A	B15	42	42	42	1/2	B16	42	42	42	1/2	B17	42	42	42	1/2	103	103	103
312A	B17	42	42	42	1/2	B17	42	42	42	1/2	B17	42	42	42	1/2	103	103	103
315A	B17	42	42	42	1/2	B17	42	42	42	1/2	B17	42	42	42	1/2	103	103	103
318A	B17	42	42	42	1/2	B17	42	42	42	1/2	B17	42	42	42	1/2	103	103	103

PNL NO	LEVEL C COL.1 TYPE	FYC1	FYC2	LEVEL C COL.2 TYPE	FYC1	FYC2	LEVEL C COL.3 TYPE	FYC1	FYC2
303A	C06	55	55	C06	50	50	C11	45	45
306A	C12	42	42	C13	42	42	C14	42	42
309A	C15	42	42	C16	42	42	C17	42	42
312A	C17	42	42	C17	42	42	C17	42	42
315A	C17	42	42	C17	42	42	C17	42	42
318A	C17	42	42	C17	42	42	C17	42	42

PNL NO	LEVEL D COLUMN 1 TYPE	FYD1	FYD2	FYD5	FYD6	WELD 2	LEVEL D COLUMN 2 TYPE	FYD1	FYD2	FYD5	WELD 2	LEVEL D COLUMN 3 TYPE	FYD1	FYD2	FYD5	FYD6	WELD 2
303A	D06	55	55	36	36	3/8	D06	50	50	36	3/8	D06	45	45	36	36	3/8
306A	D07	42	42	36	36	3/8	D07	42	42	36	3/8	D07	42	42	36	36	3/8
309A	D08	42	42	36	36	1/2	D08	42	42	36	1/2	D08	42	42	36	36	1/2
312A	D09	42	42	36	36	1/2	D09	42	42	36	1/2	D09	42	42	36	36	1/2
315A	D09	42	42	36	36	1/2	D09	42	42	36	1/2	D09	42	42	36	36	1/2
318A	D09	42	42	36	36	1/2	D09	42	42	36	1/2	D09	42	42	36	36	1/2

PNL NO	LEVEL E TYPE	FYE1	FYE2	FYE3	FYE4	FYE5	FYE6	FYE7	FYE8	WELD 5	WELD 6	WELD 7	LEVEL F TYPE	FYF1	FYF2	LCS
303A	E09	55	55	45	45	55	55	45	45	3/8	3/8	3/8	F09	55	55	702
306A	E13	55	55	45	45	55	55	45	45	3/8	3/8	3/8	F13	55	55	703
309A	E16	50	50	45	45	50	50	42	45	3/8	3/8	3/8	F16	50	50	704
312A	E17	50	50	45	45	50	50	42	45	3/8	3/8	3/8	F17	50	50	704
315A	E17	50	50	45	45	50	50	42	45	3/8	3/8	3/8	F17	50	50	704
318A	E17	45	45	36	36	45	45	36	36	3/8	3/8	3/8	F17	45	45	704

PNL NO	SPANDREL LEVEL B TB4	FYB4	SCL	SCR	SEAT DETAILS COL.1	COL.2	COL.3	SPANDREL LEVEL D TD4	FYD4	TD7	FYD7	TD8	FYD8	WELD 8	SCL	SCR	SEAT DETAILS COL.1	COL.2	COL.3
303A	1-3/8	36	B13	B12	94	95	98	1-1/2	42	1/2	36	3/4	36	3/8	D13	D11	76	74	76
306A	1-3/8	36	B12	B12	90	97	91	1-1/2	42	5/8	36	3/4	36	3/8	D11	D12	70	76	71
309A	1-3/8	36	B12	B12	96	91	98	1-1/2	42	3/4	36	7/8	36	3/8	D12	B12	76	71	76
312A	1-3/8	36	B12	B12	91	96	91	1-1/2	42	3/4	36	1	36	3/8	D12	D12	71	76	71
315A	1-3/8	36	B12	B12	97	91	97	1-1/2	42	3/4	36	1	36	3/8	D12	D12	76	71	76
318A	1-3/8	36	B12	B12	91	98	91	1-1/2	42	3/4	36	1	36	3/8	D12	D12	71	76	71

LICENSED PROFESSIONAL ENGINEER LESLIE E. ROBERTSON NO. 34360 UNIVERSITY OF THE STATE OF NEW YORK

WORTHINGTON, SKILLING, HELLE & JACKSON — Civil & Structural Engineers

PROJECT: THE WORLD TRADE CENTER | TITLE: EXTERIOR WALL - TREE - SCHEDULE WALL 300 | DATE: 7-28-67

REVISIONS

PNL NO	LEVEL B COLUMN 1 TYPE	FYB1	FYB2	FYB6	WELD 3	LEVEL B COLUMN 2 TYPE	FYB1	FYB2	FYB6	WELD 3	LEVEL B COLUMN 3 TYPE	FYB1	FYB2	FYB6	WELD 3	UPPER COL. SPLICE CDL.1	CDL.2	CDL.3
321A	B17	42	42	42	1/2	B17	42	42	42	1/2	B17	42	42	42	1/2	103	103	103
324A	B17	42	42	42	1/2	B17	42	42	42	1/2	B17	42	42	42	1/2	103	103	103
327A	B17	42	42	42	1/2	B17	42	42	42	1/2	B18	42	42	42	1/2	103	103	103
330A	B18	42	42	42	1/2	B19	42	42	42	1/2	B19	42	42	42	1/2	103	103	103
333A	B19	42	42	42	1/2	B19	42	42	42	1/2	B19	42	42	42	1/2	103	103	103
336A	B19	42	42	42	1/2	B19	42	42	42	1/2	B19	42	42	42	1/2	103	103	103
339A	B19	42	42	42	1/2	B19	42	42	42	1/2	B19	42	42	42	1/2	103	103	103

PNL NO	LEVEL C COL.1	TYPE	FYC1	FYC2	LEVEL C COL.2	TYPE	FYC1	FYC2	LEVEL C COL.3	TYPE	FYC1	FYC2
321A		C17	42	42		C17	42	42		C17	42	42
324A		C17	42	42		C17	42	42		C17	42	42
327A		C17	42	42		C17	42	42		C18	42	42
330A		C18	42	42		C19	42	42		C19	42	42
333A		C19	42	42		C19	42	42		C19	42	42
336A		C19	42	42		C19	42	42		C19	42	42
339A		C19	42	42		C19	42	42		C19	42	42

PNL NO	LEVEL D COLUMN 1 TYPE	FYD1	FYD2	FYD5	FYD6	WELD 2	LEVEL D COLUMN 2 TYPE	FYD1	FYD2	FYD5	WELD 2	LEVEL D COLUMN 3 TYPE	FYD1	FYD2	FYD5	FYD6	WELD 2
321A	D09	42	42	36	36	1/2	D09	42	42	36	1/2	D09	42	42	36	36	1/2
324A	D09	42	42	36	36	1/2	D09	42	42	36	1/2	D09	42	42	36	36	1/2
327A	D10	42	42	36	36	1/2	D10	42	42	36	1/2	D10	42	42	36	36	1/2
330A	D11	42	42	36	36	1/2	D11	42	42	36	1/2	D11	42	42	36	36	1/2
333A	D11	42	42	36	36	1/2	D11	42	42	36	1/2	D11	42	42	36	36	1/2
336A	D11	42	42	36	36	1/2	D11	42	42	36	1/2	D11	42	42	36	36	1/2
339A	D11	42	42	36	36	1/2	D11	42	42	36	1/2	D11	42	42	36	36	1/2

PNL NO	LEVEL E	TYPE	FYE1	FYE2	FYE3	FYE4	FYE5	FYE6	FYE7	FYE8	WELD 5	WELD 6	WELD 7	LEVEL F	TYPE	FYF1	FYF2	LCS
321A		E17	45	45	36	36	45	45	36	36	3/8	3/8	3/8		F17	45	45	704
324A		E17	45	45	36	36	45	45	36	36	3/8	3/8	3/8		F17	45	45	704
327A		E18	42	42	36	36	42	42	36	36	3/8	3/8	3/8		F18	42	42	704
330A		E19	42	42	36	36	42	42	36	36	3/8	3/8	3/8		F19	42	42	704
333A		E19	42	42	36	36	42	42	36	36	3/8	3/8	3/8		F19	42	42	704
336A		E19	42	42	36	36	42	42	36	36	3/8	3/8	3/8		F19	42	42	704
339A		E19	42	42	36	36	42	42	36	36	3/8	3/8	3/8		F19	42	42	704

PNL NO	SPANDREL LEVEL B TB4	FYB4	SCL	SCR	SEAT DETAILS COL.1	COL.2	COL.3	SPANDREL LEVEL D TD4	FYD4	TD7	FYD7	TD8	FYD8	WELD 8	SCL	SCR	SEAT DETAILS COL.1	COL.2	COL.3
321A	1-3/8	36	B12	B12	98	91	98	1-1/2	42	3/4	36	1	36	3/8	D12	D12	76	71	76
324A	1-3/8	36	B12	B12	91	97	91	1-1/2	42	3/4	36	1	36	3/8	D12	D12	71	76	71
327A	1-3/8	36	B12	B12	97	91	98	1-1/2	42	3/4	36	1	36	3/8	D12	D12	76	71	76
330A	1-3/8	36	B12	B12	91	98	91	1-1/2	42	3/4	36	1	36	3/8	D12	D12	71	76	70
333A	1-3/8	36	B12	B12	98	91	97	1-1/2	42	3/4	36	1	36	3/8	D12	D12	76	70	76
336A	1-3/8	36	B12	B12	91	97	91	1-1/2	42	3/4	36	1	36	3/8	D12	D12	71	76	70
339A	1-3/8	36	B12	B12	98	91	98	1-1/2	42	3/4	36	1	36	3/8	D12	D12	76	70	76

LICENSED PROFESSIONAL ENGINEER LESLIE E. ROBERTSON No. 34360 UNIVERSITY OF THE STATE OF NEW YORK

SKILLING-HELLE-CHRISTIANSEN-ROBERTSON — **Civil & Structural Engineers**

PROJECT: THE WORLD TRADE CENTER

TITLE: EXTERIOR WALL - TREE - SCHEDULE WALL 300

DATE: 12-18-67

REVISIONS

PNL ND	LEVEL 8 COLUMN 1 TYPE	FY81	FY82	FYB6	WELD 3	LEVEL B COLUMN 2 TYPE	FY81	FY82	FYB6	WELD 3	LEVEL 8 CDLUMN 3 TYPE	FYB1	FYB2	FYB6	WELD 3	UPPER COL. SPLICE COL.1	COL.2	COL.3
342A	B18	42	42	42	1/2	B18	42	42	42	1/2	817	42	42	42	1/2	103	1D3	103
345A	B17	42	42	42	1/2	B17	42	42	42	1/2	B17	42	42	42	1/2	1D3	1D3	103
348A	817	42	42	42	1/2	B17	42	42	42	1/2	817	42	42	42	1/2	1D3	1D3	103
351A	B17	42	42	42	1/2	B16	42	42	42	1/2	B15	42	42	42	1/2	1D3	1D3	103
354A	814	42	42	42	1/2	813	42	42	42	1/2	812	42	42	42	1/2	103	103	103
357A	B11	45	45	45	1/2	8D8	5D	50	50	1/2	BD6	55	55	55	1/2	103	1D2	102

PNL ND	LEVEL C COL.1 TYPE	FYC1	FYC2	LEVEL C COL.2 TYPE	FYC1	FYC2	LEVFL C COL.3 TYPE	FYC1	FYC2
342A	C18	42	42	C18	42	42	C17	42	42
345A	C17	42	42	C17	42	42	C17	42	42
348A	C17	42	42	C17	42	42	C17	42	42
351A	C17	42	42	C16	42	42	C15	42	42
354A	C14	42	42	C13	42	42	C12	42	42
357A	C11	45	45	CD8	5D	50	CD6	55	55

PNL ND	LEVEL D COLUMN 1 TYPE	FYD1	FYD2	FYD5	FYD6	WELD 2	LEVEL D COLUMN 2 TYPE	FYD1	FYD2	FYD5	WELD 2	LEVEL D CULUMN 3 TYPE	FYD1	FYD2	FYD5	FYD6	WELD 2
342A	D10	42	42	36	36	1/2	D10	42	42	36	1/2	D1D	42	42	36	36	1/2
345A	D09	42	42	36	36	1/2	D09	42	42	36	1/2	DD9	42	42	36	36	1/2
348A	D09	42	42	36	36	1/2	D09	42	42	36	1/2	DD9	42	42	36	36	1/2
351A	DD8	42	42	36	36	1/2	D08	42	42	36	1/2	DD8	42	42	36	36	1/2
354A	D07	42	42	36	36	3/8	DD7	42	42	36	3/8	D07	42	42	36	36	3/8
357A	D06	45	45	36	36	3/8	D06	5D	5D	36	3/8	D06	55	55	36	36	3/8

PNL ND	LEVEL E TYPE	FYE1	FYE2	FYE3	FYE4	FYE5	FYE6	FYE7	FYE8	WELD 5	WELD 6	WELD 7	LEVEL F TYPE	FYF1	FYF2	LCS
342A	E18	42	42	36	36	42	42	36	36	3/8	3/8	3/8	F18	42	42	7D4
345A	E17	42	42	36	36	42	42	36	36	3/8	3/8	3/8	F17	42	42	704
348A	E17	45	45	36	36	45	45	36	36	3/8	3/8	3/8	F17	45	45	704
351A	E16	45	45	36	36	45	45	36	36	3/8	3/8	3/8	F16	45	45	704
354A	E13	50	50	45	45	5D	50	45	45	3/8	3/8	3/8	F13	5D	50	703
357A	F09	5D	50	45	45	50	5D	45	45	3/8	3/8	3/8	F09	50	50	702

PNL ND	SPANDREL LEVEL B T84	FY84	SCL	SCR	SEAT DETAILS CDL.1	COL.2	COL.3	SPANDREL LEVEL D TD4	FYD4	TD7	FYD7	TD8	FYD8	WELD 8	SCL	SCR	SEAT DETAILS COL.1	CDL.2	COL.3
342A	1-3/8	36	812	B12	91	98	91	1-1/2	42	3/4	36	1	36	3/8	D12	D12	71	76	71
345A	1-3/8	36	B12	B12	97	91	97	1-1/2	42	3/4	36	1	36	3/8	D12	D12	76	71	76
348A	1-3/8	36	812	812	91	98	91	1-1/2	42	3/4	36	1	36	3/8	D12	D12	71	76	71
351A	1-3/8	36	B12	812	98	91	98	1-1/2	42	3/4	36	1	36	3/8	D12	D12	76	71	76
354A	1-3/8	36	B12	B12	91	97	90	1-1/2	42	5/8	36	7/8	36	3/8	D12	D11	71	76	70
357A	1-3/8	36	B12	B13	98	95	94	1-1/2	42	1/2	36	3/4	36	3/8	D11	D13	76	74	76

LICENSED PROFESSIONAL ENGINEER LESLIE E. ROBERTSON No. 34360 UNIVERSITY OF THE STATE OF NEW YORK

2-A1-10

SKILLING-HELLE-CHRISTIANSEN-ROBERTSON — **Civil & Structural Engineers**

PROJECT: THE WORLD TRADE CENTER

TITLE: EXTERIOR WALL - TREE - SCHEDULE WALL 400

DATE: 12-18-67

REVISIONS

PNL NO	LEVEL B COLUMN 1 TYPE	FYB1	FY82	FYB6	WELD 3	LEVEL B COLUMN 2 TYPE	FYB1	FYB2	FY86	WELD 3	LEVEL B COLUMN 3 TYPE	FY81	FYB2	FYB6	WELD 3	UPPER COL. SPLICE COL.1	COL.2	COL.3
403A	B02	50	50	50	3/8	B03	45	45	45	3/8	B03	42	42	42	3/8	102	102	102
406A	B03	42	42	42	3/8	B03	42	42	42	3/8	B03	42	42	42	3/8	102	102	102
409A	B03	42	42	42	3/8	B03	42	42	42	3/8	B04	42	42	42	3/8	102	102	102
412A	B04	42	42	42	3/8	B05	42	42	42	3/8	B05	42	42	42	3/8	102	102	102
415A	B06	42	42	42	3/8	B07	42	42	42	3/8	B08	42	42	42	1/2	102	102	102
418A	B10	42	42	42	1/2	B10	42	42	42	1/2	B10	42	42	42	1/2	103	103	103

PNL NO	LEVEL C COL.1	TYPE	FYC1	FYC2	LEVEL C COL.2	TYPE	FYC1	FYC2	LEVEL C COL.3	TYPE	FYC1	FYC2
403A		C02	50	50		C03	45	45		C03	42	42
406A		C03	42	42		C03	42	42		C03	42	42
409A		C03	42	42		C03	42	42		C04	42	42
412A		C04	42	42		C05	42	42		C05	42	42
415A		C06	42	42		C07	42	42		C08	42	42
418A		C10	42	42		C10	42	42		C10	42	42

PNL NO	LEVEL D COLUMN 1 TYPE	FYD1	FYD2	FYD5	FYD6	WELD 2	LEVEL D COLUMN 2 TYPE	FYD1	FYD2	FYD5	WELD 2	LEVEL D COLUMN 3 TYPE	FYD1	FYD2	FYD5	FYD6	WELD 2
403A	D02	50	50	36	36	3/8	D02	45	45	36	3/8	D02	42	42	36	36	3/8
406A	D02	42	42	36	36	3/8	D02	42	42	36	3/8	D02	42	42	36	36	3/8
409A	D02	42	42	36	36	3/8	D02	42	42	36	3/8	D02	42	42	36	36	3/8
412A	D03	42	42	36	36	3/8	D03	42	42	36	3/8	D03	42	42	36	36	3/8
415A	D04	42	42	36	36	3/8	D04	42	42	36	3/8	D04	42	42	36	36	3/8
418A	D05	42	42	36	36	3/8	D05	42	42	36	3/8	D05	42	42	36	36	3/8

PNL NO	LEVEL E	TYPE	FYE1	FYE2	FYE3	FYE4	FYE5	FYE6	FYE7	FYE8	WELD 5	WELD 6	WELD 7	LEVEL F	TYPE	FYF1	FYF2	LCS
403A		E04	55	55	45	45	55	55	45	45	3/8	3/8	3/8		F04	55	55	701
406A		E05	55	55	45	45	55	55	45	45	3/8	3/8	3/8		F05	55	55	701
409A		E05	55	55	45	45	55	55	45	45	3/8	3/8	3/8		F05	55	55	701
412A		E06	55	55	45	45	55	55	45	45	3/8	3/8	3/8		F06	55	55	701
415A		E07	55	55	45	45	55	55	45	45	3/8	3/8	3/8		F07	55	55	701
418A		E11	50	50	45	45	50	50	45	45	3/8	3/8	3/8		F11	50	50	702

PNL NO	SPANDREL LEVEL B TB4	FYB4	SCL	SCR	SEAT DETAILS COL.1	COL.2	COL.3	SPANDREL LEVEL D TD4	FYD4	TD7	FYD7	TD8	FYD8	WELD 8	SCL	SCR	SEAT DETAILS COL.1	COL.2	COL.3
403A	1-3/8	36	B13	B12	93	98	96	1-1/2	42	1/2	36	5/8	36	3/8	D12	D12	73	76	73
406A	1-3/8	36	B12	B12	97	93	97	1-1/2	42	1/2	36	5/8	36	3/8	D12	D12	76	73	76
409A	1-3/8	36	B12	B12	96	98	93	1-1/2	42	1/2	36	5/8	36	3/8	D12	D11	73	76	73
412A	1-3/8	36	B12	B12	98	96	98	1-1/2	42	1/2	36	3/4	36	3/8	D11	D11	76	73	76
415A	1-3/8	36	B12	B12	93	97	96	1-1/2	42	1/2	36	3/4	36	3/8	D11	D11	73	76	73
418A	1-3/8	36	B12	B12	90	98	92	1-1/2	42	1/2	36	7/8	36	3/8	D11	D12	70	76	72A

LICENSED PROFESSIONAL ENGINEER LESLIE E. ROBERTSON No. 34360 UNIVERSITY OF THE STATE OF NEW YORK

SKILLING-HELLE-CHRISTIANSEN-ROBERTSON — **Civil & Structural Engineers**

PROJECT: THE WORLD TRADE CENTER

TITLE: EXTERIOR WALL - TREE - SCHEDULE WALL 400

DATE: 12-18-67

REVISIONS

PNL NO	LEVEL B COLUMN 1 TYPE	FYB1	FYB2	FYB6	WELD 3	LEVEL B COLUMN 2 TYPE	FYB1	FYB2	FYB6	WELD 3	LEVEL B COLUMN 3 TYPE	FYB1	FYB2	FYB6	WELD 3	UPPER COL. SPLICE COL.1	COL.2	COL.3
421A	B10	42	42	42	1/2	B09	42	42	42	1/2	B08	42	42	42	1/2	103	102	102
424A	B07	42	42	42	1/2	B07	42	42	42	1/2	B07	42	42	42	1/2	102	102	102
427A	B07	42	42	42	1/2	B07	42	42	42	1/2	B07	42	42	42	1/2	102	102	102
430A	B07	42	42	42	1/2	B07	42	42	42	1/2	B07	42	42	42	1/2	102	102	102
433A	B07	42	42	42	1/2	B07	42	42	42	1/2	B07	42	42	42	1/2	102	102	102
436A	B07	42	42	42	1/2	B07	42	42	42	1/2	B07	42	42	42	1/2	102	102	102
439A	B08	42	42	42	1/2	B09	42	42	42	1/2	B10	42	42	42	1/2	102	102	103

PNL NO	LEVEL C COL.1 TYPE	FYC1	FYC2	LEVEL C COL.2 TYPE	FYC1	FYC2	LEVEL C COL.3 TYPE	FYC1	FYC2
421A	C10	42	42	C09	42	42	C08	42	42
424A	C07	42	42	C07	42	42	C07	42	42
427A	C07	42	42	C07	42	42	C07	42	42
430A	C07	42	42	C07	42	42	C07	42	42
433A	C07	42	42	C07	42	42	C07	42	42
436A	C07	42	42	C07	42	42	C07	42	42
439A	C08	42	42	C09	42	42	C10	42	42

PNL NO	LEVEL D COLUMN 1 TYPE	FYD1	FYD2	FYD5	FYD6	WELD 2	LEVEL D COLUMN 2 TYPE	FYD1	FYD2	FYD5	WELD 2	LEVEL D COLUMN 3 TYPE	FYD1	FYD2	FYD5	FYD6	WELD 2
421A	DD5	42	42	36	36	3/8	D05	42	42	36	3/8	DD5	42	42	36	36	3/8
424A	D05	42	42	36	36	3/8	DD5	42	42	36	3/8	D05	42	42	36	36	3/8
427A	DD5	42	42	36	36	3/8	DD5	42	42	36	3/8	D05	42	42	36	36	3/8
430A	D05	42	42	36	36	3/8	DD5	42	42	36	3/8	DD5	42	42	36	36	3/8
433A	D05	42	42	36	36	3/8	DD5	42	42	36	3/8	DD5	42	42	36	36	3/8
436A	D05	42	42	36	36	3/8	D05	42	42	36	3/8	D05	42	42	36	36	3/8
439A	D05	42	42	36	36	3/8	DD5	42	42	36	3/8	D05	42	42	36	36	3/8

PNL NO	LEVEL E	TYPE	FYE1	FYE2	FYE3	FYE4	FYE5	FYE6	FYE7	FYE8	WELD 5	WELD 6	WELD 7	LEVEL F	TYPE	FYF1	FYF2	LCS
421A		E10	50	50	45	45	50	50	42	45	3/8	3/8	3/8		F10	50	50	702
424A		E08	50	50	45	45	50	50	42	45	3/8	3/8	3/8		F08	50	50	701
427A		E08	50	50	45	45	50	50	42	45	3/8	3/8	3/8		F08	50	50	701
430A		E08	45	45	36	36	45	45	36	36	3/8	3/8	3/8		F08	45	45	701
433A		E08	45	45	36	36	45	45	36	36	3/8	3/8	3/8		F08	45	45	701
436A		ED8	45	45	36	36	45	45	36	36	3/8	3/8	3/8		F08	45	45	701
439A		E10	45	45	36	36	45	45	36	36	3/8	3/8	3/8		F10	45	45	702

PNL NO	SPANDREL LEVEL B TB4	FYB4	SCL	SCR	SEAT DETAILS COL.1	COL.2	COL.3	SPANDREL LEVEL D TD4	FYD4	TD7	FYD7	TD8	FYD8	WELD 8	SCL	SCR	SEAT DETAILS COL.1	COL.2	COL.3
421A	1-3/8	36	B12	B12	98	92	98	1-1/2	42	1/2	36	7/8	36	3/8	D12	D12	76	72A	76
424A	1-3/8	36	B12	B11	92	97	92	1-1/2	42	1/2	36	7/8	36	3/8	D12	D12	72A	76	72A
427A	1-3/8	36	B11	B11	97	92	98	1-1/2	42	1/2	36	7/8	36	3/8	D12	D12	76	72A	76
430A	1-3/8	36	B11	B11	92	98	92	1-1/2	42	1/2	36	7/8	36	3/8	D12	D12	72A	76	72A
433A	1-3/8	36	B11	B12	98	92	97	1-1/2	42	1/2	36	7/8	36	3/8	D12	D12	76	72A	76
436A	1-3/8	36	B12	B12	92	97	92	1-1/2	42	1/2	36	7/8	36	3/8	D12	D12	72A	76	72A
439A	1-3/8	36	B12	B12	98	92	98	1-1/2	42	1/2	36	7/8	36	3/8	D12	D12	76	72A	76

LICENSED PROFESSIONAL ENGINEER LESLIE E. ROBERTSON No. 34360 UNIVERSITY OF THE STATE OF NEW YORK

2-41-12

SKILLING-HELLE-CHRISTIANSEN-ROBERTSON **Civil & Structural Engineers**

PROJECT: THE WORLD TRADE CENTER | TITLE: EXTERIOR WALL - TREE - SCHEDULE WALL 400 | DATE: 12-18-67

REVISIONS

PNL NO	LEVEL B COLUMN 1 TYPE	FYB1	FYB2	FYB6	WELD 3	LEVEL B COLUMN 2 TYPE	FYB1	FYB2	FYB6	WELD 3	LEVEL B COLUMN 3 TYPE	FYB1	FYB2	FYB6	WELD 3	UPPER COL. SPLICE COL.1	COL.2	COL.3
442A	B10	42	42	42	1/2	B10	42	42	42	1/2	B10	42	42	42	1/2	103	103	103
445A	B08	42	42	42	1/2	B07	42	42	42	3/8	B06	42	42	42	3/8	102	102	102
448A	B05	42	42	42	3/8	B05	42	42	42	3/8	B04	42	42	42	3/8	102	102	102
451A	B04	42	42	42	3/8	B03	42	42	42	3/8	B03	42	42	42	3/8	102	102	102
454A	B03	42	42	42	3/8	B03	42	42	42	3/8	B03	42	42	42	3/8	102	102	102
457A	B03	42	42	42	3/8	B03	45	45	45	3/8	B02	50	50	50	3/8	102	102	102

PNL NO	LEVEL C COL.1 TYPE	FYC1	FYC2	LEVEL C COL.2 TYPE	FYC1	FYC2	LEVEL C COL.3 TYPE	FYC1	FYC2
442A	C10	42	42	C10	42	42	C10	42	42
445A	C08	42	42	C07	42	42	C06	42	42
448A	C05	42	42	C05	42	42	C04	42	42
451A	C04	42	42	C03	42	42	C03	42	42
454A	C03	42	42	C03	42	42	C03	42	42
457A	C03	42	42	C03	45	45	C02	50	50

PNL NO	LEVEL D COLUMN 1 TYPE	FYD1	FYD2	FYD5	FYD6	WELD 2	LEVEL D COLUMN 2 TYPE	FYD1	FYD2	FYD5	WELD 2	LEVEL D COLUMN 3 TYPE	FYD1	FYD2	FYD5	FYD6	WELD 2
442A	D05	42	42	36	36	3/8	D05	42	42	36	3/8	D05	42	42	36	36	3/8
445A	D04	42	42	36	36	3/8	D04	42	42	36	3/8	D04	42	42	36	36	3/8
448A	D03	42	42	36	36	3/8	D03	42	42	36	3/8	D03	42	42	36	36	3/8
451A	D02	42	42	36	36	3/8	D02	42	42	36	3/8	D02	42	42	36	36	3/8
454A	D02	42	42	36	36	3/8	D02	42	42	36	3/8	D02	42	42	36	36	3/8
457A	D02	42	42	36	36	3/8	D02	45	45	36	3/8	D02	50	50	36	36	3/8

PNL NO	LEVEL E	TYPE	FYE1	FYE2	FYE3	FYE4	FYE5	FYE6	FYE7	FYE8	WELD 5	WELD 6	WELD 7	LEVEL F	TYPE	FYF1	FYF2	LCS
442A		E11	45	45	36	36	45	45	36	36	3/8	3/8	3/8		F11	45	45	702
445A		E07	50	50	45	45	50	50	42	45	3/8	3/8	3/8		F07	50	50	701
448A		E06	50	50	45	45	50	50	42	45	3/8	3/8	3/8		F06	50	50	701
451A		E05	50	50	45	45	50	50	42	45	3/8	3/8	3/8		F05	50	50	701
454A		E05	50	50	45	45	50	50	42	45	3/8	3/8	3/8		F05	50	50	701
457A		E04	50	50	45	45	50	50	45	45	3/8	3/8	3/8		F04	50	50	701

PNL NO	SPANDREL LEVEL 8 T84	FYB4	SCL	SCR	SEAT DETAILS COL.1	COL.2	COL.3	SPANDREL LEVEL D TD4	FYD4	TD7	FYD7	TD8	FYD8	WELD 8	SCL	SCR	SEAT DETAILS COL.1	COL.2	COL.3
442A	1-3/8	36	B12	812	92	98	90	1-1/2	42	1/2	36	7/8	36	3/8	D12	D11	72A	76	70
445A	1-3/8	36	B12	812	96	97	93	1-1/2	42	1/2	36	3/4	36	3/8	D11	D11	73	76	73
448A	1-3/8	36	B12	812	98	96	98	1-1/2	42	1/2	36	3/4	36	3/8	D11	D11	76	73	76
451A	1-3/8	36	B12	812	93	98	96	1-1/2	42	1/2	36	5/8	36	3/8	D11	D12	73	76	73
454A	1-3/8	36	B12	B12	97	93	97	1-1/2	42	1/2	36	5/8	36	3/8	D12	D12	76	73	76
457A	1-3/8	36	B12	B13	96	98	93	1-1/2	42	1/2	36	5/8	36	3/8	D12	D12	73	76	73

LICENSED PROFESSIONAL ENGINEER LESLIE E. ROBERTSON No. 34360 UNIVERSITY OF THE STATE OF NEW YORK

WORTHINGTON, SKILLING, HELLE & JACKSON — *Civil & Structural Engineers*

PROJECT: THE WORLD TRADE CENTER | TITLE: EXTERIOR WALL - TREE - SCHEDULE NOTES | DATE: 7-25-67

REVISIONS
1-3-69
2-3-69
3-3-69
4-1-69
Printed 5-1-69

PNL NO	LEVEL B COLUMN 1 TYPE	FYB1	FYB2	FYB6	WELD 3	LEVEL B COLUMN 2 TYPE	FYB1	FYB2	FYB6	WELD 3	LEVEL B COLUMN 3 TYPE	FYB1	FYB2	FYB6	WELD 3	UPPER COL. SPLICE COL.1	COL.2	COL.3
(1)	(2)	(3)	(4)	(3)	(5)	(2)	(3)	(4)	(3)	(5)	(2)	(3)	(4)	(3)	(5)	(6)	(6)	(6)

PNL NO	LEVEL C COL.1 TYPE	FYC1	FYC2	LEVEL C COL.2 TYPE	FYC1	FYC2	LEVEL C COL.3 TYPE	FYC1	FYC2
(1)	(7)	(3)	(3)	(7)	(3)	(3)	(7)	(3)	(3)

PNL NO	LEVEL D COLUMN 1 TYPE	FYD1	FYD2	FYD5	FYD6	WELD 2	LEVEL D COLUMN 2 TYPE	FYD1	FYD2	FYD5	WELD 2	LEVEL D COLUMN 3 TYPE	FYD1	FYD2	FYD5	FYD6	WELD 2
(1)	(8)	(3)	(3)	(3)	(3)	(9)	(8)	(3)	(3)	(3)	(9)	(8)	(3)	(3)	(3)	(3)	(9)

PNL NO	LEVEL E	TYPE	FYE1	FYE2	FYE3	FYE4	FYE5	FYE6	FYE7	FYE8	WELD 5	WELD 6	WELD 7	LEVEL F	TYPE	FYF1	FYF2	LCS
(1)		(10)	(3)	(3)	(3)	(3)	(3)	(3)	(3)	(3)	(11)	(11)	(11)		(12)	(3)	(3)	(13)

PNL NO	SPANDREL LEVEL B TB4	FYB4	SCL	SCR	SEAT DETAILS COL.1	COL.2	COL.3	SPANDREL LEVEL D TD4	FYD4	TD7	FYD7	TD8	FYD8	WELD 8	SCL	SCR	SEAT DETAILS COL.1	COL.2	COL.3
(1)	(14)	(3)	(15)	(16)	(17)	(17)	(17)	(18)	(3)	(18)	(3)	(18)	(3)	(19)	(20)	(21)	(17)	(17)	(17)

(1) PANEL NUMBER - IDENTIFIED BY COLUMN NUMBER FOR CENTER COLUMN OF PANEL AND TOWER DESIGNATION A OR B
(NOTE) PANELS ARE SHOWN FROM INSIDE OF BUILDING LOOKING OUT. FOR PANEL ELEVATION SEE 2-AB2-2
SCHEDULED COLUMN 1 IS THE LEFT COLUMN, COLUMN 2 THE MIDDLE COLUMN AND COLUMN 3 THE RIGHT COLUMN
(2) COLUMN TYPE. FOR DIMENSIONS, PLATE THICKNESSES AND WELDS - SEE 2-AB2-4 THRU 6
(3) REQUIRED YIELD STRENGTH FOR INDICATED PLATE (KSI)
(4) REQUIRED YIELD STRENGTH FOR PLATE B2 AND B3 (KSI)
(5) WELD SIZE (INCHES) SEE 2-AB2-4 FOR LOCATION
(6) DETAIL NUMBER FOR UPPER COLUMN SPLICE - SEE 2-AB2-25 THRU 27
(7) COLUMN TYPE. FOR DIMENSIONS, PLATE THICKNESSES AND WELDS - SEE 2-AB2-7
(8) COLUMN TYPE. FOR DIMENSIONS, PLATE THICKNESSES AND WELDS - SEE 2-AB2-8 THRU 11
(9) WELD SIZE (INCHES) SEE 2-AB2-8 FOR LOCATION
(10) ASSEMBLY TYPE. FOR DIMENSIONS, PLATE THICKNESSES AND WELDS - SEE 2-AB2-12 THRU 15
(11) WELD SIZE (INCHES) SEE 2-AB2-13 FOR LOCATION
(12) COLUMN TYPE. FOR DIMENSIONS, PLATE THICKNESSES AND WELDS - SEE 2-AB2-16
(13) DETAIL NUMBER FOR LOWER COLUMN SPLICE - SEE 2-AB2-29 AND 30
(14) THICKNESS OF PLATE B4 (INCHES) SEE 2-AB2-4 FOR DETAILS
(15) DETAIL NUMBER FOR LEFT SPANDREL CONNECTION - SEE 2-AB2-23
(16) DETAIL NUMBER FOR RIGHT SPANDREL CONNECTION - SEE 2-AB2-23
(17) DETAIL NUMBER FOR BEAM AND BRACING SEAT DETAILS - SEE 2-AB2-31 THRU 36
(18) THICKNESS OF PLATE INDICATED - SEE 2-AB2- 8 THRU 11 FOR DETAILS
(19) WELD SIZE (INCHES) SEE 2-AB2- 8 THRU 11 FOR LOCATION
(20) DETAIL NUMBER FOR LEFT SPANDREL CONNECTION - SEE 2-AB2-24
(21) DETAIL NUMBER FOR RIGHT SPANDREL CONNECTION - SEE 2-AB2-24

LICENSED PROFESSIONAL ENGINEER LESLIE E. ROBERTSON No. 34360 UNIVERSITY OF THE STATE OF NEW YORK

SKILLING-HELLE-CHRISTIANSEN-ROBERTSON — **Civil & Structural Engineers**

PROJECT: THE WORLD TRADE CENTER

TITLE: EXTERIOR WALL - TREE - SCHEDULE WALL 100

DATE: 12-18-67

REVISIONS

7-25-68

8-20-68

PNL NO	LEVEL B COLUMN 1 TYPE	FYB1	FYB2	FYB6	WELD 3	LEVEL B COLUMN 2 TYPE	FYB1	FYB2	FYB6	WELD 3	LEVEL B COLUMN 3 TYPE	FYB1	FYB2	FYB6	WELD 3	UPPER COL. SPLICE COL.1	COL.2	COL.3
103B	B06	55	55	50	1/2	B08	50	50	50	1/2	B11	45	45	45	1/2	102	102	103
106B	B12	45	45	45	1/2	B13	45	45	45	1/2	B14	45	45	45	1/2	103	103	103
109B	B15	45	45	45	1/2	B16	45	45	45	1/2	B17	45	45	45	1/2	103	103	103
112B	B17	45	45	45	1/2	B17	45	45	45	1/2	B17	45	45	45	1/2	103	103	103
115B	B17	45	45	45	1/2	B17	45	45	45	1/2	B17	45	45	45	1/2	103	103	103
118B	B17	45	45	45	1/2	B17	45	45	45	1/2	B17	45	45	45	1/2	103	103	103

PNL NO	LEVEL C COL.1 TYPE	FYC1	FYC2	LEVEL C COL.2 TYPE	FYC1	FYC2	LEVEL C COL.3 TYPE	FYC1	FYC2
103B	C06	55	55	C08	50	50	C11	45	45
106B	C12	45	45	C13	45	45	C14	45	45
109B	C15	45	45	C16	45	45	C17	45	45
112B	C17	45	45	C17	45	45	C17	45	45
115B	C17	45	45	C17	45	45	C17	45	45
118B	C17	45	45	C17	45	45	C17	45	45

PNL NO	LEVEL D COLUMN 1 TYPE	FYD1	FYD2	FYD5	FYD6	WELD 2	LEVEL D COLUMN 2 TYPE	FYD1	FYD2	FYD5	WELD 2	LEVEL D COLUMN 3 TYPE	FYD1	FYD2	FYD5	FYD6	WELD 2
103B	D06	55	55	36	45	3/8	D06	50	50	36	3/8	D06	45	45	36	45	3/8
106B	D07	45	45	36	45	3/8	D07	45	45	36	3/8	D07	45	45	36	45	3/8
109B	D08	45	45	36	45	1/2	D08	45	45	36	1/2	D08	45	45	36	45	1/2
112B	D09	45	45	36	45	1/2	D09	45	45	36	1/2	D09	45	45	36	45	1/2
115B	D09	45	45	36	45	1/2	D09	45	45	36	1/2	D09	45	45	36	45	1/2
118B	D09	45	45	36	45	1/2	D09	45	45	36	1/2	D09	45	45	36	45	1/2

PNL NO	LEVEL E	TYPE	FYE1	FYE2	FYE3	FYE4	FYE5	FYE6	FYE7	FYE8	WELD 5	WELD 6	WELD 7	LEVEL F	TYPE	FYF1	FYF2	LCS
103B		E09	60	60	45	45	60	60	45	42	3/8	3/8	3/8		F09	60	60	702
106B		E13	55	55	45	45	55	55	42	42	3/8	3/8	3/8		F13	55	55	703
109B		E16	55	55	45	45	55	55	42	42	3/8	3/8	3/8		F16	55	55	704
112B		E17	50	50	45	45	50	50	42	42	3/8	3/8	3/8		F17	50	50	704
115B		E17	50	50	45	45	50	50	42	42	3/8	3/8	3/8		F17	50	50	704
118B		F17	50	50	45	45	50	50	42	42	3/8	3/8	3/8		F17	50	50	704

PNL NO	SPANDREL LEVEL B T84	FYB4	SCL	SCR	SEAT DETAILS COL.1	COL.2	COL.3
103B	1-3/8	36	B13	B13	95	89	89
106B	1-3/8	36	B12	B13	90	89	91
109B	1-3/8	36	B13	B13	89	91	98
112B	1-3/8	36	B13	B13	91	98	91
115B	1-3/8	36	B13	B13	97	91	97
118B	1-3/8	36	B13	B13	91	98	91

PNL NO	SPANDREL LEVEL D TD4	FYD4	TD7	FYD7	TD8	FYD8	WELD 8	SCL	SCR	SEAT DETAILS COL.1	COL.2	COL.3
103B	1-1/2	42	1/2	36	3/4	36	3/8	D13	D12	76	74	76
106B	1-1/2	42	5/8	36	3/4	36	3/8	D12	D13	70	76	71
109B	1-1/2	42	3/4	36	7/8	36	3/8	D13	D13	76	71	76
112B	1-1/2	42	3/4	36	1	36	3/8	D13	D13	71	76	71
115B	1-1/2	42	3/4	36	1	36	3/8	D13	D13	76	71	76
118B	1-1/2	42	3/4	36	1	36	3/8	D13	D13	71	76	71

LICENSED PROFESSIONAL ENGINEER LESLIE E. ROBERTSON No. 34360 UNIVERSITY OF THE STATE OF NEW YORK

WORTHINGTON, SKILLING, HELLE & JACKSON — Civil & Structural Engineers

PROJECT: THE WORLD TRADE CENTER | TITLE: EXTERIOR WALL - TREE - SCHEDULE WALL 100 | DATE: 7-28-67

REVISIONS

PNL NO	LEVEL B COLUMN 1 TYPE	FYB1	FYB2	FYB6	WELD 3	LEVEL B COLUMN 2 TYPE	FYB1	FYB2	FYB6	WELD 3	LEVEL B COLUMN 3 TYPE	FYB1	FYB2	FYB6	WELD 3	UPPER COL. SPLICE COL.1	COL.2	COL.3
121B	B17	45	45	45	1/2	B17	45	45	45	1/2	B17	45	45	45	1/2	103	103	103
124B	B17	45	45	45	1/2	B17	45	45	45	1/2	B17	45	45	45	1/2	103	103	103
127B	B17	45	45	45	1/2	B17	45	45	45	1/2	B18	45	45	45	1/2	103	103	103
130B	B18	45	45	45	1/2	B19	45	45	45	1/2	B19	45	45	45	1/2	103	103	103
133B	B19	45	45	45	1/2	B19	45	45	45	1/2	B19	45	45	45	1/2	103	103	103
136B	B19	45	45	45	1/2	B19	45	45	45	1/2	B19	45	45	45	1/2	103	103	103
139B	B19	45	45	45	1/2	B19	45	45	45	1/2	B19	45	45	45	1/2	103	103	103

PNL NO	LEVEL C COL.1 TYPE	FYC1	FYC2	LEVEL C COL.2 TYPE	FYC1	FYC2	LEVEL C COL.3 TYPE	FYC1	FYC2
121B	C17	45	45	C17	45	45	C17	45	45
124B	C17	45	45	C17	45	45	C17	45	45
127B	C17	45	45	C17	45	45	C18	45	45
130B	C18	45	45	C19	45	45	C19	45	45
133B	C19	45	45	C19	45	45	C19	45	45
136B	C19	45	45	C19	45	45	C19	45	45
139B	C19	45	45	C19	45	45	C19	45	45

PNL NO	LEVEL D COLUMN 1 TYPE	FYD1	FYD2	FYD5	FYD6	WELD 2	LEVEL D COLUMN 2 TYPE	FYD1	FYD2	FYD5	WELD 2	LEVEL D COLUMN 3 TYPE	FYD1	FYD2	FYD5	FYD6	WELD 2
121B	D09	45	45	36	45	1/2	D09	45	45	36	1/2	D09	45	45	36	45	1/2
124B	D09	45	45	36	45	1/2	D09	45	45	36	1/2	D09	45	45	36	45	1/2
127B	D10	45	45	36	45	1/2	D10	45	45	36	1/2	D10	45	45	36	45	1/2
130B	D11	45	45	36	45	1/2	D11	45	45	36	1/2	D11	45	45	36	45	1/2
133B	D11	45	45	36	45	1/2	D11	45	45	36	1/2	D11	45	45	36	45	1/2
136B	D11	45	45	36	45	1/2	D11	45	45	36	1/2	D11	45	45	36	45	1/2
139B	D11	45	45	36	45	1/2	D11	45	45	36	1/2	D11	45	45	36	45	1/2

PNL. NO.	LEVEL E TYPE	FYE1	FYE2	FYE3	FYE4	FYE5	FYE6	FYE7	FYE8	WELD 5	WELD 6	WELD 7	LEVEL F TYPE	FYF1	FYF2	LCS
121B	E17	50	50	45	45	50	50	42	42	3/8	3/8	3/8	F17	50	50	704
124B	E17	50	50	45	45	50	50	42	42	3/8	3/8	3/8	F17	50	50	704
127B	E18	45	45	36	36	45	45	42	42	3/8	3/8	3/8	F18	45	45	704
130B	E19	45	45	36	36	45	45	42	42	3/8	3/8	3/8	F19	45	45	704
133B	E19	45	45	36	36	45	45	42	42	3/8	3/8	3/8	F19	45	45	704
136B	E19	45	45	36	36	45	45	42	42	3/8	3/8	3/8	F19	45	45	704
139B	E19	45	45	36	36	45	45	42	42	3/8	3/8	3/8	F19	45	45	704

PNL NO	SPANDREL LEVEL B TB4	FYB4	SCL	SCR	SEAT DETAILS COL.1	COL.2	COL.3	SPANDREL LEVEL D TD4	FYD4	TD7	FYD7	TD8	FYD8	WELD 8	SCL	SCR	SEAT DETAILS COL.1	COL.2	COL.3
121B	1-3/8	36	B13	B13	98	91	96	1-1/2	42	3/4	36	1	36	3/8	D13	D13	76	71	76
124B	1-3/8	36	B13	B13	91	97	91	1-1/2	42	3/4	36	1	36	3/8	D13	D13	71	76	71
127B	1-3/8	36	B13	B13	97	91	98	1-1/2	42	3/4	36	1	36	3/8	D13	D13	76	71	76
130B	1-3/8	36	B13	B13	91	98	91	1-1/2	42	3/4	36	1	36	3/8	D13	D13	71	76	70
133B	1-3/8	36	B13	B13	98	91	97	1-1/2	42	3/4	36	1	36	3/8	D13	D13	76	70	76
136B	1-3/8	36	B13	B13	91	97	91	1-1/2	42	3/4	36	1	36	3/8	D13	D14	71	76	70
139B	1-3/8	36	B13	B13	98	91	98	1-1/2	42	3/4	36	1	36	3/8	D14	D13	76	70	76

LICENSED PROFESSIONAL ENGINEER LESLIE E. ROBERTSON No. 34360 UNIVERSITY OF THE STATE OF NEW YORK

SKILLING-HELLE-CHRISTIANSEN-ROBERTSON — **Civil & Structural Engineers**

PROJECT: THE WORLD TRADE CENTER

TITLE: EXTERIOR WALL - TREE - SCHEDULE WALL 100

DATE: 12-18-67

REVISIONS

7-25-68

8-20-68

PNL NO	LEVEL B COLUMN 1 TYPE	FYB1	FYB2	FYB6	WELD 3	LEVEL B COLUMN 2 TYPE	FYB1	FYB2	FYB6	WELD 3	LEVEL B COLUMN 3 TYPE	FYB1	FYB2	FYB6	WELD 3	UPPER COL. SPLICE COL.1	COL.2	COL.3
142B	B18	45	45	45	1/2	B18	45	45	45	1/2	B17	45	45	45	1/2	103	103	103
145B	B17	45	45	45	1/2	B17	45	45	45	1/2	B17	45	45	45	1/2	103	103	103
148B	B17	45	45	45	1/2	B17	45	45	45	1/2	B17	45	45	45	1/2	103	103	103
151B	B17	45	45	45	1/2	B16	45	45	45	1/2	B15	45	45	45	1/2	103	103	103
154B	B14	45	45	45	1/2	B13	45	45	45	1/2	B12	45	45	45	1/2	103	103	103
157B	B11	45	45	45	1/2	B08	50	50	50	1/2	B06	55	55	50	1/2	103	102	102

PNL NO	LEVEL C COL.1 TYPE	FYC1	FYC2	LEVEL C COL.2 TYPE	FYC1	FYC2	LEVEL C COL.3 TYPE	FYC1	FYC2
142B	C18	45	45	C18	45	45	C17	45	45
145B	C17	45	45	C17	45	45	C17	45	45
148B	C17	45	45	C17	45	45	C17	45	45
151B	C17	45	45	C16	45	45	C15	45	45
154B	C14	45	45	C13	45	45	C12	45	45
157B	C11	45	45	C08	50	50	C06	55	55

PNL NO	LEVEL D COLUMN 1 TYPE	FYD1	FYD2	FYD5	FYD6	WELD 2	LEVEL D COLUMN 2 TYPE	FYD1	FYD2	FYD5	WELD 2	LEVEL D COLUMN 3 TYPE	FYD1	FYD2	FYD5	FYD6	WELD 2
142B	D10	45	45	36	45	1/2	D10	45	45	36	1/2	D10	45	45	36	45	1/2
145B	D09	45	45	36	45	1/2	D09	45	45	36	1/2	D09	45	45	36	45	1/2
148B	D09	45	45	36	45	1/2	D09	45	45	36	1/2	D09	45	45	36	45	1/2
151B	D08	45	45	36	45	1/2	D08	45	45	36	1/2	D08	45	45	36	45	1/2
154B	D07	45	45	36	45	3/8	D07	45	45	36	3/8	D07	45	45	36	45	3/8
157B	D06	45	45	36	45	3/8	D06	50	50	36	3/8	D06	55	55	36	45	3/8

PNL NO	LEVEL E TYPE	FYE1	FYE2	FYE3	FYE4	FYE5	FYE6	FYE7	FYE8	WELD 5	WELD 6	WELD 7	LEVEL F TYPE	FYF1	FYF2	LCS
142B	E18	50	50	45	45	50	50	42	42	3/8	3/8	3/8	F20	42	42	705
145B	E17	50	50	45	45	50	50	42	42	3/8	3/8	3/8	F20	42	42	705
148B	E17	45	45	45	45	45	45	42	42	3/8	3/8	3/8	F17	45	45	704
151B	E16	55	55	45	45	55	55	42	42	3/8	3/8	3/8	F16	55	55	704
154B	E13	55	55	45	45	55	55	42	42	3/8	3/8	3/8	F13	55	55	703
157B	E09	60	60	45	45	60	60	42	42	3/8	3/8	3/8	F09	60	60	702

PNL NO	SPANDREL LEVEL B TB4	FYB4	SCL	SCR	SEAT DETAILS COL.1	COL.2	COL.3	SPANDREL LEVEL D TD4	FYD4	TD7	FYD7	TD8	FYD8	WELD 8	SCL	SCR	SEAT DETAILS COL.1	COL.2	COL.3
142B	1-3/8	36	B13	B13	91	98	91	1-1/2	42	3/4	36	1	36	3/8	D13	D14	71	76	71
145B	1-3/8	36	B13	B13	97	91	97	1-1/2	42	3/4	36	1	36	3/8	D14	D13	76	71	76
148B	1-3/8	36	B13	B13	91	98	91	1-1/2	42	3/4	36	1	36	3/8	D13	D12	71	76	71
151B	1-3/8	36	B13	B13	98	91	89	1-1/2	42	3/4	36	1	36	3/8	D12	D12	76	71	76
154B	1-3/8	36	B13	B13	91	89	90	1-1/2	42	5/8	36	7/8	36	3/8	D12	D12	71	76	71
157B	1-3/8	36	B13	B13	89	89	86	1-1/2	42	1/2	36	3/4	36	3/8	D12	D14	76	74	76

LICENSED PROFESSIONAL ENGINEER LESLIE E. ROBERTSON No. 34360 UNIVERSITY OF THE STATE OF NEW YORK

SKILLING-HELLE-CHRISTIANSEN-ROBERTSON — **Civil & Structural Engineers**

PROJECT: THE WORLD TRADE CENTER

TITLE: EXTERIOR WALL - TREE - SCHEDULE WALL 200

DATE: 12-18-67

REVISIONS

7-25-68

8-20-68

PNL NO	LEVEL B COLUMN 1 TYPE	FYB1	FYB2	FYB6	WELD 3	LEVEL B COLUMN 2 TYPE	FYB1	FYB2	FYB6	WELD 3	LEVEL B COLUMN 3 TYPE	FYB1	FYB2	FYB6	WELD 3	UPPER COL. SPLICE COL.1	COL.2	COL.3
203B	B02	60	60	50	3/8	B03	55	55	50	3/8	B03	50	50	50	3/8	102	102	102
206B	B03	50	50	50	3/8	B03	50	50	50	3/8	B03	50	50	50	3/8	102	102	102
209B	B03	50	50	50	3/8	B03	50	50	50	3/8	B04	50	50	50	3/8	102	102	102
212B	B04	50	50	50	3/8	B05	50	50	50	3/8	B05	50	50	50	3/8	102	102	102
215B	B06	50	50	50	3/8	B07	50	50	50	3/8	B08	50	50	50	1/2	102	102	102
218B	B10	50	50	50	1/2	B10	50	50	50	1/2	B10	50	50	50	1/2	103	103	103

PNL NO	LEVEL C COL.1 TYPE	FYC1	FYC2	LEVEL C COL.2 TYPE	FYC1	FYC2	LEVEL C COL.3 TYPE	FYC1	FYC2
203B	C02	60	60	C03	55	55	C03	50	50
206B	C03	50	50	C03	50	50	C03	50	50
209B	C03	50	50	C03	50	50	C04	50	50
212B	C04	50	50	C05	50	50	C05	50	50
215B	C06	50	50	C07	50	50	C08	50	50
218B	C10	50	50	C10	50	50	C10	50	50

PNL NO	LEVEL D COLUMN 1 TYPE	FYD1	FYD2	FYD5	FYD6	WELD 2	LEVEL D COLUMN 2 TYPE	FYD1	FYD2	FYD5	WELD 2	LEVEL D COLUMN 3 TYPE	FYD1	FYD2	FYD5	FYD6	WELD 2
203B	D02	60	60	36	36	3/8	D02	55	55	36	3/8	D02	50	50	36	36	3/8
206B	D02	50	50	36	36	3/8	D02	50	50	36	3/8	D02	50	50	36	36	3/8
209B	D02	50	50	36	36	3/8	D02	50	50	36	3/8	D02	50	50	36	36	3/8
212B	D03	50	50	36	36	3/8	D03	50	50	36	3/8	D03	50	50	36	36	3/8
215B	D04	50	50	36	36	3/8	D04	50	50	36	3/8	D04	50	50	36	36	3/8
218B	D05	50	50	36	36	3/8	D05	50	50	36	3/8	D05	50	50	36	36	3/8

PNL NO	LEVEL E TYPE	FYE1	FYE2	FYE3	FYE4	FYE5	FYE6	FYE7	FYE8	WELD 5	WELD 6	WELD 7	LEVEL F TYPE	FYF1	FYF2	LCS
203B	E04	60	60	45	45	60	60	45	42	3/8	3/8	3/8	F04	60	60	701
206B	E05	60	60	45	45	60	60	45	42	3/8	3/8	3/8	F05	60	60	701
209B	E05	55	55	45	45	55	55	45	42	3/8	3/8	3/8	F05	55	55	701
212B	E06	55	55	45	45	55	55	45	42	3/8	3/8	3/8	F06	55	55	701
215B	F07	55	55	45	45	55	55	45	42	3/8	3/8	3/8	F07	55	55	701
218B	E11	55	55	45	45	55	55	45	42	3/8	3/8	3/8	F11	55	55	702

PNL NO	SPANDREL LEVEL B TB4	FYB4	SCL	SCR	SEAT DETAILS COL.1	COL.2	COL.3	SPANDREL LEVEL D TD4	FYD4	TD7	FYD7	TD8	FYD8	WELD 8	SCL	SCR	SEAT DETAILS COL.1	COL.2	COL.3
203B	1-3/8	36	B13	B13	93	89	89	1-1/2	42	1/2	36	5/8	36	3/8	D14	D14	73	76	73
206B	1-3/8	36	B13	B13	89	93	96	1-1/2	42	1/2	36	5/8	36	3/8	D14	D14	76	75	76
209B	1-3/8	36	B13	B13	88	98	93	1-1/2	42	1/2	36	5/8	36	3/8	D14	D11	73	76	73
212B	1-3/8	36	B13	B13	98	88	88	1-1/2	42	1/2	36	3/4	36	3/8	D11	D11	76	73	76
215B	1-3/8	36	B13	B12	93	98	96	1-1/2	42	1/2	36	3/4	36	3/8	D11	D12	73	76	73
218B	1-3/8	36	B12	B12	90	96	92	1-1/2	42	1/2	36	7/8	36	3/8	D12	D12	70	76	72½

LICENSED PROFESSIONAL ENGINEER LESLIE E. ROBERTSON No. 34360 UNIVERSITY OF THE STATE OF NEW YORK

SKILLING-HELLE-CHRISTIANSEN-ROBERTSON — **Civil & Structural Engineers**

PROJECT: THE WORLD TRADE CENTER

TITLE: EXTERIOR WALL - TREE - SCHEDULE WALL 200

DATE: 12-18-67

REVISIONS

PNL NO	LEVEL B COLUMN 1 TYPE	FYB1	FYB2	FYB6	WELD 3	LEVEL B COLUMN 2 TYPE	FYB1	FYB2	FYB6	WELD 3	LEVEL B COLUMN 3 TYPE	FYB1	FYB2	FYB6	WELD 3	UPPER COL. SPLICE COL.1	COL.2	COL.3
221B	B10	50	50	50	1/2	B09	50	50	50	1/2	B08	50	50	50	1/2	103	102	102
224B	B07	50	50	50	1/2	B07	50	50	50	1/2	B07	50	50	50	1/2	102	102	102
227B	B07	50	50	50	1/2	B07	50	50	50	1/2	B07	50	50	50	1/2	102	102	102
230B	B07	50	50	50	1/2	B07	50	50	50	1/2	B07	50	50	50	1/2	102	102	102
233B	B07	50	50	50	1/2	B07	50	50	50	1/2	B07	50	50	50	1/2	102	102	102
236B	B07	50	50	50	1/2	B07	50	50	50	1/2	B07	50	50	50	1/2	102	102	102
239B	B08	50	50	50	1/2	B09	50	50	50	1/2	B10	50	50	50	1/2	102	102	103

PNL NO	LEVEL C COL.1 TYPE	FYC1	FYC2	LEVEL C COL.2 TYPE	FYC1	FYC2	LEVEL C COL.3 TYPE	FYC1	FYC2
221B	C10	50	50	C09	50	50	C08	50	50
224B	C07	50	50	C07	50	50	C07	50	50
227B	C07	50	50	C07	50	50	C07	50	50
230B	C07	50	50	C07	50	50	C07	50	50
233B	C07	50	50	C07	50	50	C07	50	50
236B	C07	50	50	C07	50	50	C07	50	50
239B	C08	50	50	C09	50	50	C10	50	50

PNL NO	LEVEL D COLUMN 1 TYPE	FYD1	FYD2	FYD5	FYD6	WELD 2	LEVEL D COLUMN 2 TYPE	FYD1	FYD2	FYD5	WELD 2	LEVEL D COLUMN 3 TYPE	FYD1	FYD2	FYD5	FYD6	WELD 2
221B	D05	50	50	36	36	3/8	D05	50	50	36	3/8	D05	50	50	36	36	3/8
224B	D05	50	50	36	36	3/8	D05	50	50	36	3/8	D05	50	50	36	36	3/8
227B	D05	50	50	36	36	3/8	D05	50	50	36	3/8	D05	50	50	36	36	3/8
230B	D05	50	50	36	36	3/8	D05	50	50	36	3/8	D05	50	50	36	36	3/8
233B	D05	50	50	36	36	3/8	D05	50	50	36	3/8	D05	50	50	36	36	3/8
236B	D05	50	50	36	36	3/8	D05	50	50	36	3/8	D05	50	50	36	36	3/8
239B	D05	50	50	36	36	3/8	D05	50	50	36	3/8	D05	50	50	36	36	3/8

PNL NO	LEVEL E TYPE	FYE1	FYE2	FYE3	FYE4	FYE5	FYE6	FYE7	FYE8	WELD 5	WELD 6	WELD 7	LEVEL F TYPE	FYF1	FYF2	LCS
221B	E10	50	50	45	45	50	50	42	42	3/8	3/8	3/8	F10	50	50	702
224B	E08	50	50	45	45	50	50	42	42	3/8	3/8	3/8	F08	50	50	701
227B	E08	45	45	45	45	45	45	42	42	3/8	3/8	3/8	F08	45	45	701
230B	E08	55	55	45	45	55	55	42	42	3/8	3/8	3/8	F15	42	42	704
233B	E08	55	55	45	45	55	55	42	42	3/8	3/8	3/8	F15	42	42	704
236B	E08	45	45	36	36	45	45	42	42	3/8	3/8	3/8	F08	45	45	701
239B	E10	45	45	36	36	45	45	42	42	3/8	3/8	3/8	F10	45	45	702

PNL NO	SPANDREL LEVEL B TB4	FYB4	SCL	SCR	SEAT DETAILS COL.1	COL.2	COL.3	SPANDREL LEVEL D TD4	FYD4	TD7	FYD7	TD8	FYD8	WELD 8	SCL	SCR	SEAT DETAILS COL.1	COL.2	COL.3
221B	1-3/8	36	B12	B12	98	92	98	1-1/2	42	1/2	36	7/8	36	3/8	D12	D13	76	72A	76
224B	1-3/8	36	B12	B12	92	97	92	1-1/2	42	1/2	36	7/8	36	3/8	D13	D13	72A	76	72A
227B	1-3/8	36	B12	B12	97	92	98	1-1/2	42	1/2	36	7/8	36	3/8	D13	D12	76	72A	76
230B	1-3/8	36	B12	B12	92	98	92	1-1/2	42	1/2	36	7/8	36	3/8	D12	D14	72A	76	72A
233B	1-3/8	36	B12	B12	98	92	97	1-1/2	42	1/2	36	7/8	36	3/8	D14	D12	76	72A	76
236B	1-3/8	36	B12	B12	92	97	92	1-1/2	42	1/2	36	7/8	36	3/8	D12	D14	72A	76	72A
239B	1-3/8	36	B12	B12	98	92	98	1-1/2	42	1/2	36	7/8	36	3/8	D14	D14	76	72A	76

LICENSED PROFESSIONAL ENGINEER LESLIE E. ROBERTSON No. 34360 UNIVERSITY OF THE STATE OF NEW YORK

2-31-A

SKILLING, HELLE, CHRISTIANSEN, ROBERTSON — **Structural & Civil Engineers**

PROJECT	TITLE	DATE
THE WORLD TRADE CENTER	DRAWING BOOK 2 - EXTERIOR WALL TREE	10/ 6/72

REVISIONS

PRINTED 5/18/73

2-AB0- 0	5/18/73	2-A1- 13	12-18-67	2-B1- 13	8/20/68	2-AB2- 36	10/16/68
2-A1- 1	[redacted]	2-B1 - 1	5/ 1/69	2-AB2- 1	5/ 1/69	SA-125	4- 7-67
2-A1- 2	12-18-67	2-B1- 2	8/20/68	2-AB2- 2	4- 7-67	SA-126	5- 8-67
2-A1- 3	7-28-67	2-B1- 3	7-28-67	2-AB2- 3	4- 7-67	SA-127	4- 7-67
2-A1- 4	12-18-67	2-B1- 4	8/20/68	2-AB2- 4	7-28-67	SA- 128	5/ 8/71
2-A1- 5	12-18-67	2-B1- 5	8/20/68	2-AB2- 5	7-28-67	SB-125	2/15/68
2-A1- 6	12-18-67	2-B1- 6	12-18-67	2-AB2- 6	7-17-67	SB-126	2/15/68
2-A1- 7	12-18-67	2-B1- 7	8/20/68	2-AB2- 7	4- 7-67	SB-127	2/15/68
2-A1- 8	12-18-67	2-B1- 8	8/20/68	2-AB2- 8	4- 7-67	SB-128	2/15/68
2-A1- 9	7-28-67	2-B1- 9	7-28-67	2-AB2- 9	4- 7-67		
2-A1- 10	12-18-67	2-B1- 10	8/20/68	2-AB2- 10	4- 7-67		
2-A1- 11	12-18-67	2-B1- 11	8/20/68	2-AB2- 11	4- 7-67		
2-A1- 12	12-18-67	2-B1- 12	12-18-67	2-AB2- 12	12-18-67		
				2-AB2- 13	4- 7-67		
				2-AB2- 14	4- 7-67		
				2-AB2- 15	12-18-67		
				2-AB2- 16	4- 7-67		
				2-AB2- 17	7-25-67		
				2-AB2- 18	12-18-67		
				2-AB2- 19	7-25-67		
				2-AB2- 20	7-25-67		
				2-AB2- 21	7-25-67		
				2-AB2- 22	8/20/68		
				2-AB2- 23	1- 2-68		
				2-AB2- 24	12-18-67		
				2-AB2- 25	12-18-67		
				2-AB2- 28	7-28-67		
				2-AB2- 29	4- 7-67		
				2-AB2- 30	4- 7-67		
				2-AB2- 31	12-18-67		
				2-AB2- 32	12-18-67		
				2-AB2- 33	12-18-67		
				2-AB2- 34	8/20/68		
				2-AB2- 35	8/20/68		

SKILLING-HELLE-CHRISTIANSEN-ROBERTSON — **Civil & Structural Engineers**

PROJECT: THE WORLD TRADE CENTER

TITLE: EXTERIOR WALL - TREE - SCHEDULE WALL 200

DATE: 12-18-67

REVISIONS

7-25-68

8-20-68

PNL NO	LEVEL B COLUMN 1 TYPE	FYB1	FYB2	FYB6	WELD 3	LEVEL B COLUMN 2 TYPE	FYB1	FYB2	FYB6	WELD 3	LEVEL B COLUMN 3 TYPE	FYB1	FYB2	FYB6	WELD 3	UPPER COL. SPLICE COL.1	COL.2	COL.3
242B	B10	50	50	50	1/2	B10	50	50	50	1/2	B10	50	50	50	1/2	103	103	103
245B	B08	50	50	50	1/2	B07	50	50	50	3/8	B06	50	50	50	3/8	102	102	102
248B	B05	50	50	50	3/8	B05	50	50	50	3/8	B04	50	50	50	3/8	102	102	102
251B	B04	50	50	50	3/8	B03	50	50	50	3/8	B03	50	50	50	3/8	102	102	102
254B	B03	50	50	50	3/8	B03	50	50	50	3/8	B03	50	50	50	3/8	102	102	102
257B	B03	50	50	50	3/8	B03	55	55	50	3/8	B02	60	60	50	3/8	102	102	102

PNL NO	LEVEL C COL.1 TYPE	FYC1	FYC2	LEVEL C COL.2 TYPE	FYC1	FYC2	LEVEL C COL.3 TYPE	FYC1	FYC2
242B	C10	50	50	C10	50	50	C10	50	50
245B	C08	50	50	C07	50	50	C06	50	50
248B	C05	50	50	C05	50	50	C04	50	50
251B	C04	50	50	C03	50	50	C03	50	50
254B	C03	50	50	C03	50	50	C03	50	50
257B	C03	50	50	C03	55	55	C02	60	60

PNL NO	LEVEL D COLUMN 1 TYPE	FYD1	FYD2	FYD5	FYD6	WELD 2	LEVEL D COLUMN 2 TYPE	FYD1	FYD2	FYD5	WELD 2	LEVEL D COLUMN 3 TYPE	FYD1	FYD2	FYD5	FYD6	WELD 2
242B	D05	50	50	36	36	3/8	D05	50	50	36	3/8	D05	50	50	36	36	3/8
245B	D04	50	50	36	36	3/8	D04	50	50	36	3/8	D04	50	50	36	36	3/8
248B	D03	50	50	36	36	3/8	D03	50	50	36	3/8	D03	50	50	36	36	3/8
251B	D02	50	50	36	36	3/8	D02	50	50	36	3/8	D02	50	50	36	36	3/8
254B	D02	50	50	36	36	3/8	D02	50	50	36	3/8	D02	50	50	36	36	3/8
257B	D02	50	50	36	36	3/8	D02	55	55	36	3/8	D02	60	60	36	36	3/8

PNL NO	LEVEL E TYPE	FYE1	FYE2	FYE3	FYE4	FYE5	FYE6	FYE7	FYE8	WELD 5	WELD 6	WELD 7	LEVEL F TYPE	FYF1	FYF2	LCS
242B	E11	50	50	45	45	50	50	45	42	3/8	3/8	3/8	F11	50	50	702
245B	E07	60	60	45	45	60	60	45	42	3/8	3/8	3/8	F14	45	45	704
248B	E06	50	50	45	45	50	50	45	42	3/8	3/8	3/8	F06	50	50	701
251B	E05	65	65	45	45	65	65	45	42	3/8	3/8	3/8	F11	45	45	702
254B	E05	50	50	45	45	50	50	45	42	3/8	3/8	3/8	F05	50	50	701
257B	E04	50	50	45	45	50	50	45	42	3/8	3/8	3/8	F04	50	50	701

PNL NO	SPANDREL LEVEL B T84	FYB4	SCL	SCR	SEAT DETAILS COL.1	COL.2	COL.3	SPANDREL LEVEL D TD4	FYD4	TD7	FYD7	TD8	FYD8	WELD 8	SCL	SCR	SEAT DETAILS COL.1	COL.2	COL.3
242B	1-3/8	36	B12	B12	92	98	90	1-1/2	42	1/2	36	7/8	36	3/8	D14	D12	72A	76	70
245B	1-3/8	36	B12	B12	96	98	93	1-1/2	42	1/2	36	3/4	36	3/8	D12	D12	73	76	73
248B	1-3/8	36	B12	B12	88	88	98	1-1/2	42	1/2	36	3/4	36	3/8	D12	D14	76	73	76
251B	1-3/8	36	B12	B12	93	98	88	1-1/2	42	1/2	36	5/8	36	3/8	D14	D14	73	76	73
254B	1-3/8	36	B12	B13	96	93	89	1-1/2	42	1/2	36	5/8	36	3/8	D14	D13	76	75	76
257B	1-3/8	36	B13	B13	89	89	93	1-1/2	42	1/2	36	5/8	36	3/8	D13	D13	73	76	73

LICENSED PROFESSIONAL ENGINEER
LESLIE E. ROBERTSON
No. 24360
UNIVERSITY OF THE STATE OF NEW YORK

SKILLING-HELLE-CHRISTIANSEN-ROBERTSON — **Civil & Structural Engineers**

PROJECT: THE WORLD TRADE CENTER

TITLE: EXTERIOR WALL - TREE - SCHEDULE WALL 300

DATE: 12-18-67

REVISIONS

7-25-68

8-20-68

PNL NO	LEVEL B COLUMN 1 TYPE	FYB1	FYB2	FYB6	WELD 3	LEVEL B COLUMN 2 TYPE	FYB1	FYB2	FYB6	WELD 3	LEVEL B COLUMN 3 TYPE	FYB1	FYB2	FYB6	WELD 3	UPPER COL. SPLICE COL.1	COL.2	COL.3
3038	B06	60	60	50	1/2	B08	55	55	50	1/2	B11	50	50	50	1/2	102	102	103
306B	B12	45	45	45	1/2	B13	45	45	45	1/2	B14	45	45	45	1/2	103	103	103
309B	B15	45	45	45	1/2	B16	45	45	45	1/2	B17	45	45	45	1/2	103	103	103
312B	B17	45	45	45	1/2	B17	45	45	45	1/2	B17	45	45	45	1/2	103	103	103
315B	B17	45	45	45	1/2	B17	45	45	45	1/2	B17	45	45	45	1/2	103	103	103
318B	B17	45	45	45	1/2	B17	42	42	42	1/2	B17	42	42	42	1/2	103	103	103

PNL NO	LEVEL C COL.1 TYPE	FYC1	FYC2	LEVEL C COL.2 TYPE	FYC1	FYC2	LEVEL C COL.3 TYPE	FYC1	FYC2
303B	C06	60	60	C08	55	55	C11	50	50
306B	C12	45	45	C13	45	45	C14	45	45
309B	C15	45	45	C16	45	45	C17	45	45
312B	C17	45	45	C17	45	45	C17	45	45
315B	C17	45	45	C17	45	45	C17	45	45
318B	C17	45	45	C17	42	42	C17	42	42

PNL NO	LEVEL D COLUMN 1 TYPE	FYD1	FYD2	FYD5	FYD6	WELD 2	LEVEL D COLUMN 2 TYPE	FYD1	FYD2	FYD5	WELD 2	LEVEL D COLUMN 3 TYPE	FYD1	FYD2	FYD5	FYD6	WELD 2
303B	D06	60	60	36	45	3/8	D06	55	55	36	3/8	D06	50	50	36	45	3/8
306B	D07	45	45	36	45	3/8	D07	45	45	36	3/8	D07	45	45	36	45	3/8
309B	D08	45	45	36	45	1/2	D08	45	45	36	1/2	D08	45	45	36	45	1/2
312B	D09	45	45	36	45	1/2	D09	45	45	36	1/2	D09	45	45	36	45	1/2
315B	D09	45	45	36	45	1/2	D09	45	45	36	1/2	D09	45	45	36	45	1/2
318B	D09	45	45	36	45	1/2	D09	42	42	36	1/2	D09	42	42	36	45	1/2

PNL NO	LEVEL E TYPE	FYE1	FYE2	FYE3	FYE4	FYE5	FYE6	FYE7	FYE8	WELD 5	WELD 6	WELD 7	LEVEL F TYPE	FYF1	FYF2	LCS
303B	E09	55	55	45	45	55	55	45	42	3/8	3/8	3/8	F09	55	55	707
306B	E13	55	55	45	45	55	55	42	42	3/8	3/8	3/8	F13	55	55	703
309B	E16	50	50	45	45	50	50	42	42	3/8	3/8	3/8	F16	50	50	704
312B	E17	45	45	45	45	45	45	42	42	3/8	3/8	3/8	F17	45	45	704
315B	E17	50	50	45	45	50	50	42	42	3/8	3/8	3/8	F21	42	42	705
318B	E17	50	50	45	45	50	50	42	42	3/8	3/8	3/8	F21	42	42	705

PNL NO	SPANDREL LEVEL B TB4	FYB4	SCL	SCR	SEAT DETAILS COL.1	COL.2	COL.3	SPANDREL LEVEL D TD4	FYD4	TD7	FYD7	TD8	FYD8	WELD 8	SCL	SCR	SEAT DETAILS COL.1	COL.2	COL.3
303B	1-3/8	36	B13	B13	86	89	89	1-1/2	42	1/2	36	3/4	36	3/8	D13	D12	76	74	76
3068	1-3/8	36	B13	B13	90	89	91	1-1/2	42	5/8	36	3/4	36	3/8	D12	D13	70	76	71
309B	1-3/8	36	B13	B13	89	91	98	1-1/2	42	3/4	36	7/8	36	3/8	D13	D14	76	71	76
312B	1-3/8	36	B13	B13	91	98	91	1-1/2	42	3/4	36	1	36	3/8	D14	D14	71	76	71
315B	1-3/8	36	B13	B13	97	91	97	1-1/2	42	3/4	36	1	36	3/8	D14	D14	76	71	76
318B	1-3/8	36	B13	B13	91	98	91	1-1/2	42	3/4	36	1	36	3/8	D14	D13	71	76	71

LICENSED PROFESSIONAL ENGINEER
LESLIE E. ROBERTSON
No. 34360
UNIVERSITY OF THE STATE OF NEW YORK

WORTHINGTON, SKILLING, HELLE & JACKSON — Civil & Structural Engineers

PROJECT: THE WORLD TRADE CENTER | TITLE: EXTERIOR WALL - TREE - SCHEDULE WALL 300 | DATE: 7-28-67

REVISIONS

PNL NO	LEVEL B COLUMN 1 TYPE	FYB1	FYB2	FYB6	WELD 3	LEVEL B COLUMN 2 TYPE	FYB1	FYB2	FYB6	WELD 3	LEVEL B COLUMN 3 TYPE	FYB1	FYB2	FYB6	WELD 3	UPPER COL. SPLICE COL.1	COL.2	COL.3
321B	B17	42	42	42	1/2	B17	42	42	42	1/2	B17	42	42	42	1/2	103	103	103
324B	B17	42	42	42	1/2	B17	42	42	42	1/2	B17	42	42	42	1/2	103	103	103
327B	B17	42	42	42	1/2	B17	42	42	42	1/2	B18	42	42	42	1/2	103	103	103
330B	B18	42	42	42	1/2	B19	42	42	42	1/2	B19	42	42	42	1/2	103	103	103
333B	B19	42	42	42	1/2	B19	42	42	42	1/2	B19	42	42	42	1/2	103	103	103
336B	B19	42	42	42	1/2	B19	42	42	42	1/2	B19	42	42	42	1/2	103	103	103
339B	B19	42	42	42	1/2	B19	42	42	42	1/2	B19	42	42	42	1/2	103	103	103

PNL NO	LEVEL C COL.1 TYPE	FYC1	FYC2	LEVEL C COL.2 TYPE	FYC1	FYC2	LEVEL C COL.3 TYPE	FYC1	FYC2
321B	C17	42	42	C17	42	42	C17	42	42
324B	C17	42	42	C17	42	42	C17	42	42
327B	C17	42	42	C17	42	42	C18	42	42
330B	C18	42	42	C19	42	42	C19	42	42
333B	C19	42	42	C19	42	42	C19	42	42
336B	C19	42	42	C19	42	42	C19	42	42
339B	C19	42	42	C19	42	42	C19	42	42

PNL NO	LEVEL D COLUMN 1 TYPE	FYD1	FYD2	FYD5	FYD6	WELD 2	LEVEL D COLUMN 2 TYPE	FYD1	FYD2	FYD5	WELD 2	LEVEL D COLUMN 3 TYPE	FYD1	FYD2	FYD5	FYD6	WELD 2
321B	D09	42	42	36	42	1/2	D09	42	42	36	1/2	D09	42	42	36	42	1/2
324B	D09	42	42	36	42	1/2	D09	42	42	36	1/2	D09	42	42	36	42	1/2
327B	D10	42	42	36	42	1/2	D10	42	42	36	1/2	D10	42	42	36	42	1/2
330B	D11	42	42	36	42	1/2	D11	42	42	36	1/2	D11	42	42	36	42	1/2
333B	D11	42	42	36	42	1/2	D11	42	42	36	1/2	D11	42	42	36	42	1/2
336B	D11	42	42	36	42	1/2	D11	42	42	36	1/2	D11	42	42	36	42	1/2
339B	D11	42	42	36	42	1/2	D11	42	42	36	1/2	D11	42	42	36	42	1/2

PNL NO	LEVEL E TYPE	FYE1	FYE2	FYE3	FYE4	FYE5	FYE6	FYE7	FYE8	WELD 5	WELD 6	WELD 7	LEVEL F TYPE	FYF1	FYF2	LCS
321B	E17	42	42	36	36	42	42	36	36	3/8	3/8	3/8	F17	42	42	704
324B	E17	42	42	36	36	42	42	36	36	3/8	3/8	3/8	F17	42	42	704
327B	E18	42	42	36	36	42	42	36	36	3/8	3/8	3/8	F18	42	42	704
330B	E19	42	42	36	36	42	42	36	36	3/8	3/8	3/8	F19	42	42	704
333B	E19	42	42	36	36	42	42	36	36	3/8	3/8	3/8	F19	42	42	704
336B	E19	42	42	36	36	42	42	36	36	3/8	3/8	3/8	F19	42	42	704
339B	E19	42	42	36	36	42	42	36	36	3/8	3/8	3/8	F19	42	42	704

PNL NO	SPANDREL LEVEL B TB4	FYB4	SCL	SCR	SEAT DETAILS COL.1	COL.2	COL.3	SPANDREL LEVEL D TD4	FYD4	TD7	FYD7	TD8	FYD8	WELD 8	SCL	SCR	SEAT DETAILS COL.1	COL.2	COL.3
321B	1-3/8	36	B13	B13	98	91	98	1-1/2	42	3/4	36	1	36	3/8	D13	D13	76	71	76
324B	1-3/8	36	B13	B13	91	97	91	1-1/2	42	3/4	36	1	36	3/8	D13	D13	71	76	71
327B	1-3/8	36	B13	B13	97	91	98	1-1/2	42	3/4	36	1	36	3/8	D13	D13	76	71	76
330B	1-3/8	36	B13	B13	91	98	91	1-1/2	42	3/4	36	1	36	3/8	D13	D13	71	76	70
333B	1-3/8	36	B13	B13	98	91	97	1-1/2	42	3/4	36	1	36	3/8	D13	D13	76	70	76
336B	1-3/8	36	B13	B13	91	97	91	1-1/2	42	3/4	36	1	36	3/8	D13	D13	71	76	70
339B	1-3/8	36	B13	B13	98	91	98	1-1/2	42	3/4	36	1	36	3/8	D13	D13	76	70	76

LICENSED PROFESSIONAL ENGINEER LESLIE E. ROBERTSON No. 34360 UNIVERSITY OF THE STATE OF NEW YORK

SKILLING-HELLE-CHRISTIANSEN-ROBERTSON — **Civil & Structural Engineers**

PROJECT: THE WORLD TRADE CENTER

TITLE: EXTERIOR WALL - TREE - SCHEDULE WALL 300

DATE: 12-18-67

REVISIONS
7-25-68
8-20-68

PNL NO	LEVEL B COLUMN 1 TYPE	FYB1	FYB2	FYB6	WELD 3	LEVEL B COLUMN 2 TYPE	FYB1	FYB2	FYB6	WELD 3	LEVEL B COLUMN 3 TYPE	FYB1	FYB2	FYB6	WELD 3	UPPER COL. SPLICE COL.1	COL.2	COL.3
342B	B18	42	42	42	1/2	B18	42	42	42	1/2	B17	42	42	42	1/2	103	103	103
345B	B17	42	42	42	1/2	B17	42	42	42	1/2	B17	42	42	42	1/2	103	103	103
348B	B17	42	42	42	1/2	B17	42	42	42	1/2	B17	42	42	42	1/2	103	103	103
351B	B17	42	42	42	1/2	B16	42	42	42	1/2	B15	42	42	42	1/2	103	103	103
354B	B14	42	42	42	1/2	B13	42	42	42	1/2	B12	42	42	42	1/2	103	103	103
357B	B11	45	45	45	1/2	B08	50	50	50	1/2	B06	55	55	50	1/2	103	102	102

PNL NO	LEVEL C COL.1 TYPE	FYC1	FYC2	LEVEL C COL.2 TYPE	FYC1	FYC2	LEVEL C COL.3 TYPE	FYC1	FYC2
342B	C18	42	42	C18	42	42	C17	42	42
345B	C17	42	42	C17	42	42	C17	42	42
348B	C17	42	42	C17	42	42	C17	42	42
351B	C17	42	42	C16	42	42	C15	42	42
354B	C14	42	42	C13	42	42	C12	42	42
357B	C11	45	45	C08	50	50	C06	55	55

PNL NO	LEVEL D COLUMN 1 TYPE	FYD1	FYD2	FYD5	FYD6	WELD 2	LEVEL D COLUMN 2 TYPE	FYD1	FYD2	FYD5	WELD 2	LEVEL D COLUMN 3 TYPE	FYD1	FYD2	FYD5	FYD6	WELD 2
342B	D10	42	42	36	42	1/2	D10	42	42	36	1/2	D10	42	42	36	42	1/2
345B	D09	42	42	36	42	1/2	D09	42	42	36	1/2	D09	42	42	36	42	1/2
348B	D09	42	42	36	36	1/2	D09	42	42	36	1/2	D09	42	42	36	36	1/2
351B	D08	42	42	36	36	1/2	D08	42	42	36	1/2	D08	42	42	36	36	1/2
354B	D07	42	42	36	36	3/8	D07	42	42	36	3/8	D07	42	42	36	36	3/8
357B	D06	45	45	36	36	3/8	D06	50	50	36	3/8	D06	55	55	36	36	3/8

PNL NO	LEVEL E	TYPE	FYE1	FYE2	FYE3	FYE4	FYE5	FYE6	FYE7	FYE8	WELD 5	WELD 6	WELD 7	LEVEL F	TYPE	FYF1	FYF2	LCS
342B		E18	42	42	36	36	42	42	36	36	3/8	3/8	3/8		F18	42	42	704
345B		E17	42	42	36	36	42	42	36	36	3/8	3/8	3/8		F17	42	42	704
348B		E17	42	42	36	36	42	42	36	36	3/8	3/8	3/8		F17	42	42	704
351B		E16	42	42	36	36	42	42	36	36	3/8	3/8	3/8		F16	42	42	704
354B		E13	42	42	36	36	42	42	36	36	3/8	3/8	3/8		F13	42	42	703
357B		E09	45	45	36	36	45	45	42	36	3/8	3/8	3/8		F09	45	45	702

PNL NO	SPANDREL LEVEL B TB4	FYB4	SCL	SCR	SEAT DETAILS COL.1	COL.2	COL.3	SPANDREL LEVEL D TD4	FYD4	TD7	FYD7	TDB	FYDB	WELD 8	SCL	SCR	SEAT DETAILS COL.1	COL.2	COL.3
342B	1-3/8	36	B13	B13	91	98	91	1-1/2	42	3/4	36	1	36	3/8	D13	D14	71	76	71
345B	1-3/8	36	B13	B13	97	91	97	1-1/2	42	3/4	36	1	36	3/8	D14	D13	76	71	76
348B	1-3/8	36	B13	B13	91	98	91	1-1/2	42	3/4	36	1	36	3/8	D13	D13	71	76	71
351B	1-3/8	36	B13	B13	98	91	89	1-1/2	42	3/4	36	1	36	3/8	D13	D13	76	71	76
354B	1-3/8	36	B13	B13	91	89	85	1-1/2	42	5/8	36	7/8	36	3/8	D13	D12	71	76	71
357B	1-3/8	36	B13	B13	89	89	94	1-1/2	42	1/2	36	3/4	36	3/8	D12	D13	76	74	76

LICENSED PROFESSIONAL ENGINEER LESLIE E. ROBERTSON No. 34360 UNIVERSITY OF THE STATE OF NEW YORK

2-21-70

SKILLING-HELLE-CHRISTIANSEN-ROBERTSON — **Civil & Structural Engineers**

PROJECT: THE WORLD TRADE CENTER

TITLE: EXTERIOR WALL - TREE - SCHEDULE WALL 400

DATE: 12-18-67

REVISIONS

7-25-68

8-20-68

PNL NO	LEVEL B COLUMN 1 TYPE	FYB1	FYB2	FYB6	WELD 3	LEVEL B COLUMN 2 TYPE	FYB1	FYB2	FYB6	WELD 3	LEVEL B COLUMN 3 TYPE	FYB1	FYB2	FYB6	WELD 3	UPPER COL. SPLICE COL.1	COL.2	COL.3
403B	B02	60	60	50	3/8	B03	55	55	50	3/8	B03	50	50	50	3/8	102	102	102
406B	B03	50	50	50	3/8	B03	50	50	50	3/8	B03	50	50	50	3/8	102	102	102
409B	B03	50	50	50	3/8	B03	50	50	50	3/8	B04	50	50	50	3/8	102	102	102
412B	B04	50	50	50	3/8	B05	50	50	50	3/8	B05	50	50	50	3/8	102	102	102
415B	B06	50	50	50	3/8	B07	50	50	50	3/8	B08	50	50	50	1/2	102	102	102
418B	B10	50	50	50	1/2	B10	50	50	50	1/2	B10	50	50	50	1/2	103	103	103

PNL NO	LEVEL C COL.1 TYPE	FYC1	FYC2	LEVEL C COL.2 TYPE	FYC1	FYC2	LEVEL C COL.3 TYPE	FYC1	FYC2
403B	C02	60	60	C03	55	55	C03	50	50
406B	C03	50	50	C03	50	50	C03	50	50
409B	C03	50	50	C03	50	50	C04	50	50
412B	C04	50	50	C05	50	50	C05	50	50
415B	C06	50	50	C07	50	50	C08	50	50
418B	C10	50	50	C10	50	50	C10	50	50

PNL NO	LEVEL D COLUMN 1 TYPE	FYD1	FYD2	FYD5	FYD6	WELD 2	LEVEL D COLUMN 2 TYPE	FYD1	FYD2	FYD5	WELD 2	LEVEL D COLUMN 3 TYPE	FYD1	FYD2	FYD5	FYD6	WELD 2
403B	D02	60	60	36	36	3/8	D02	55	55	36	3/8	D02	50	50	36	36	3/8
406B	D02	50	50	36	36	3/8	D02	50	50	36	3/8	D02	50	50	36	36	3/8
409B	D02	50	50	36	36	3/8	D02	50	50	36	3/8	D02	50	50	36	36	3/8
412B	D03	50	50	36	36	3/8	D03	50	50	36	3/8	D03	50	50	36	36	3/8
415B	D04	50	50	36	36	3/8	D04	50	50	36	3/8	D04	50	50	36	36	3/8
418B	D05	50	50	36	36	3/8	D05	50	50	36	3/8	D05	50	50	36	36	3/8

PNL NO	LEVEL E	TYPE	FYE1	FYE2	FYE3	FYE4	FYE5	FYE6	FYE7	FYE8	WELD 5	WELD 6	WELD 7	LEVEL F	TYPE	FYF1	FYF2	LCS
403B		E04	45	45	36	36	45	45	45	36	3/8	3/8	3/8		F04	45	45	701
406B		E05	42	42	36	36	42	42	42	36	3/8	3/8	3/8		F05	42	42	701
409B		E05	55	55	45	45	55	55	42	36	3/8	3/8	3/8		F11	42	42	702
412B		E06	42	42	36	36	42	42	42	36	3/8	3/8	3/8		F06	42	42	701
415B		E07	42	42	36	36	42	42	42	36	3/8	3/8	3/8		F07	42	42	701
418B		E11	45	45	36	36	45	45	42	36	3/8	3/8	3/8		F11	45	45	702

PNL NO	SPANDREL LEVEL B TB4	FYB4	SCL	SCR	SEAT DETAILS COL.1	COL.2	COL.3	SPANDREL LEVEL D TD4	FYD4	TD7	FYD7	TD8	FYD8	WELD 8	SCL	SCR	SEAT DETAILS COL.1	COL.2	COL.3
403B	1-3/8	36	B13	B13	93	89	89	1-1/2	42	1/2	36	5/8	36	3/8	D13	D12	73	76	73
406B	1-3/8	36	B13	B13	89	93	96	1-1/2	42	1/2	36	5/8	36	3/8	D12	D14	76	75	76
409B	1-3/8	36	B13	B12	88	98	93	1-1/2	42	1/2	36	5/8	36	3/8	D14	D14	73	76	73
412B	1-3/8	36	B12	B13	98	88	98	1-1/2	42	1/2	36	3/4	36	3/8	D14	D11	76	73	76
415B	1-3/8	36	B13	B12	93	97	96	1-1/2	42	1/2	36	3/4	36	3/8	D11	D13	73	76	73
418B	1-3/8	36	B12	B12	90	98	92	1-1/2	42	1/2	36	7/8	36	3/8	D13	D13	70	76	72A

LICENSED PROFESSIONAL ENGINEER LESLIE E. ROBERTSON No. 34360 UNIVERSITY OF THE STATE OF NEW YORK

SKILLING-HELLE-CHRISTIANSEN-ROBERTSON — **Civil & Structural Engineers**

PROJECT	TITLE	DATE
THE WORLD TRADE CENTER	EXTERIOR WALL – TREE – SCHEDULE WALL 400	12-14-67

REVISIONS

PNL NO	LEVEL A COLUMN 1 TYPE	FYB1	FYB2	FYB6	WELD 3	LEVEL A COLUMN 2 TYPE	FYB1	FYB2	FYB6	WELD 3	LEVEL A COLUMN 3 TYPE	FYB1	FYB2	FYB6	WELD 3	COL. SPLICE COL.1	COL.2	COL.3
421B	B10	50	50	50	1/2	B09	50	50	50	1/2	B08	50	50	50	1/2	103	102	102
424B	B07	50	50	50	1/2	B07	50	50	50	1/2	B07	50	50	50	1/2	102	102	102
427B	B07	50	50	50	1/2	B07	50	50	50	1/2	B07	50	50	50	1/2	102	102	102
430B	B07	50	50	50	1/2	B07	50	50	50	1/2	B07	50	50	50	1/2	102	102	102
433B	B07	50	50	50	1/2	B07	50	50	50	1/2	B07	50	50	50	1/2	102	102	102
436B	B07	50	50	50	1/2	B07	50	50	50	1/2	B07	50	50	50	1/2	102	102	102
439B	B08	50	50	50	1/2	B09	50	50	50	1/2	B10	50	50	50	1/2	[illegible]	102	[illegible]

PNL NO	LEVEL C COL.1 TYPE	FYC1	FYC2	LEVEL C COL.2 TYPE	FYC1	FYC2	LEVEL C COL.3 TYPE	FYC1	FYC2
421B	C10	50	50	C09	50	50	C08	50	50
424B	C07	50	50	C07	50	50	C07	50	50
427B	C07	50	50	C07	50	50	C07	50	50
430B	C07	50	50	C07	50	50	C07	50	50
433B	C07	50	50	C07	50	50	C07	50	50
436B	C07	50	50	C07	50	50	C07	50	50
439B	C08	50	50	C09	50	50	C10	[illegible]	[illegible]

PNL NO	LEVEL D COLUMN 1 TYPE	FYD1	FYD2	FYD5	FYD6	WELD 2	LEVEL D COLUMN 2 TYPE	FYD1	FYD2	FYD5	WELD 2	LEVEL D COLUMN 3 TYPE	FYD1	FYD2	FYD5	FYD6	WELD 2
421B	D05	50	50	36	36	3/8	D05	50	50	36	3/8	D05	50	50	36	36	3/8
424B	D05	50	50	36	36	3/8	D05	50	50	36	3/8	D05	50	50	36	36	3/8
427B	D05	50	50	36	36	3/8	D05	50	50	36	3/8	D05	50	50	36	36	3/8
430B	D05	50	50	36	36	3/8	D05	50	50	36	3/8	D05	50	50	36	36	3/8
433B	D05	50	50	36	36	3/8	D05	50	50	36	3/8	D05	50	50	36	36	3/8
436B	D05	50	50	36	36	3/8	D05	50	50	36	3/8	D05	50	50	36	36	3/8
439B	D05	50	50	36	36	3/8	D05	50	50	36	3/8	D05	50	50	36	36	3/8

PNL NO	LEVEL E TYPE	FYE1	FYE2	FYE3	FYE4	FYE5	FYE6	FYE7	FYE8	WELD 5	WELD 6	WELD 7	LEVEL F TYPE	FYF1	FYF2	LIS
421B	E10	45	45	36	36	45	45	42	36	3/8	3/8	3/8	F10	45	45	702
424B	E08	50	50	45	45	50	50	42	42	3/8	3/8	3/8	F06	50	50	703
427B	E08	60	60	45	45	60	60	45	42	3/8	3/8	3/8	F15	45	45	[illegible]
430B	E08	60	60	45	45	60	60	45	42	3/8	3/8	3/8	F15	45	45	[illegible]
433B	E08	50	50	45	45	50	50	42	42	3/8	3/8	3/8	F08	50	50	[illegible]
436B	E08	50	50	45	45	50	50	42	42	3/8	3/8	3/8	F09	50	50	[illegible]
439B	E10	55	55	45	45	55	55	45	42	3/8	3/8	3/8	F10	50	50	[illegible]

PNL NO	SPANDREL LEVEL B TB4	FYB4	SCL	SCR	SEAT DETAILS COL.1	COL.2	COL.3	SPANDREL LEVEL D TD4	FYD4	TD7	FYD7	TD8	FYD8	WELD 8	SCL	SCR	SEAT DETAILS COL.1	COL.2	COL.3
421B	1-3/8	36	B12	B12	98	92	98	1-1/2	42	1/2	36	7/8	36	3/8	D13	D13	76	72A	76
424B	1-3/8	36	B12	B12	92	97	92	1-1/2	42	1/2	36	7/8	36	3/8	D13	D13	72A	76	72A
427B	1-3/8	36	B12	B12	97	92	98	1-1/2	42	1/2	36	7/8	36	3/8	D13	D14	76	72A	76
430B	1-3/8	36	B12	B12	[illegible]	98	92	1-1/2	42	1/2	36	7/8	36	3/8	D14	D12	72A	76	72A
433B	1-3/8	36	B12	B12	92	92	97	1-1/2	42	1/2	36	7/8	36	3/8	D12	D12	76	72A	76
436B	1-3/8	36	B12	B13	92	97	92	1-1/2	42	1/2	36	7/8	36	3/8	D12	D12	72A	76	72A
439B	1-3/8	36	B13	B13	98	92	98	1-1/2	42	1/2	36	7/8	36	3/8	[illegible]	[illegible]	[illegible]	[illegible]	76

LICENSED PROFESSIONAL ENGINEER
LESLIE E. ROBERTSON
No. 34360
STATE OF NEW YORK

SKILLING-HELLE-CHRISTIANSEN-ROBERTSON — **Civil & Structural Engineers**

PROJECT: THE WORLD TRADE CENTER

TITLE: EXTERIOR WALL - TREE - SCHEDULE WALL 400

DATE: 12-18-67

REVISIONS
7-25-68
8-20-68

PNL NO	LEVEL A COLUMN 1 TYPE	FYB1	FYB2	FYB6	WELD 3	LEVEL A COLUMN 2 TYPE	FYB1	FYB2	FYB6	WELD 3	LEVEL A COLUMN 3 TYPE	FYB1	FYB2	FYB6	WELD 3	UPPER COL. SPLICE COL.1	COL.2	COL.3
4428	B10	50	50	50	1/2	B10	50	50	50	1/2	B10	50	50	50	1/2	103	103	103
4458	B08	50	50	50	1/2	B07	50	50	50	3/8	B06	50	50	50	3/8	102	102	102
4488	B05	50	50	50	3/8	B05	50	50	50	3/8	B04	50	50	50	3/8	102	102	102
4518	B04	50	50	50	3/8	B03	50	50	50	3/8	B03	50	50	50	3/8	102	102	102
4548	B03	50	50	50	3/8	B03	50	50	50	3/8	B03	50	50	50	3/8	102	102	102
4578	B03	50	50	50	3/8	B03	50	50	50	3/8	B02	50	50	50	3/8	102	102	102

PNL NO	LEVEL C COL.1 TYPE	FYC1	FYC2	LEVEL C COL.2 TYPE	FYC1	FYC2	LEVEL C COL.3 TYPE	FYC1	FYC2
4425	C10	50	50	C10	50	50	C10	50	50
4458	C08	50	50	C07	50	50	C06	50	50
4488	C05	50	50	C05	50	50	C04	50	50
4518	C04	50	50	C03	50	50	C03	50	50
4548	C03	50	50	C03	50	50	C03	50	50
4578	C03	50	50	C03	50	50	C02	55	55

PNL NO	LEVEL D COLUMN 1 TYPE	FYD1	FYD2	FYD5	FYD6	WELD 2	LEVEL D COLUMN 2 TYPE	FYD1	FYD2	FYD5	WELD 2	LEVEL D COLUMN 3 TYPE	FYD1	FYD2	FYD5	FYD6	WELD 2
4428	D05	50	50	36	36	3/8	D05	50	50	36	3/8	D05	50	50	36	36	3/8
4458	D04	50	50	36	36	3/8	D04	50	50	36	3/8	D04	50	50	36	36	3/8
4488	D03	50	50	36	36	3/8	D03	50	50	36	3/8	D03	50	50	36	36	3/8
4518	D02	50	50	36	36	3/8	D02	50	50	36	3/8	D02	50	50	36	36	3/8
4548	D02	50	50	36	36	3/8	D02	50	50	36	3/8	D02	50	50	36	36	3/8
4578	D02	50	50	36	36	3/8	D02	50	50	36	3/8	D02	55	55	36	36	3/8

PNL NO	LEVEL E	TYPE	FYE1	FYE2	FYE3	FYE4	FYE5	FYE6	FYE7	FYE8	WELD 5	WELD 6	WELD 7	LEVEL F	TYPE	FYF1	FYF2	LCS
4428		E11	55	55	45	45	55	55	45	42	3/8	3/8	3/8		F11	55	55	702
4458		E07	60	60	45	45	60	60	45	42	3/8	3/8	3/8		F07	60	60	701
4488		E06	60	60	45	45	60	60	45	42	3/8	3/8	3/8		F06	60	60	701
4518		E05	60	60	45	45	60	60	45	42	3/8	3/8	3/8		F05	60	60	701
4548		E05	60	60	45	45	60	60	45	42	3/8	3/8	3/8		F05	60	60	701
4578		E04	60	60	45	45	60	60	45	42	3/8	3/8	3/8		F04	60	60	701

PNL NO	SPANDREL LEVEL B TB4	FYB4	SCL	SCR	SEAT DETAILS COL.1	COL.2	COL.3	SPANDREL LEVEL D TD4	FYD4	TD7	FYD7	TD8	FYD8	WELD 8	SCL	SCR	SEAT DETAILS COL.1	COL.2	COL.3
4428	1-3/8	36	B12	B12	92	98	90	1-1/2	42	1/2	36	7/8	36	3/8	D12	D11	72A	76	70
4458	1-3/8	36	B12	B12	96	97	93	1-1/2	42	1/2	36	3/4	36	3/8	D11	D11	73	76	73
4488	1-3/8	36	B12	B12	98	88	98	1-1/2	42	1/2	36	3/4	36	3/8	D11	D12	76	73	76
4518	1-3/8	36	B12	B12	93	98	88	1-1/2	42	1/2	36	3/4	36	3/8	D12	D12	73	78	73
4548	1-3/8	36	B12	B12	96	93	89	1-1/2	42	1/2	36	3/4	36	3/8	D12	D13	77	75	76
4578	1-3/8	36	B12	B12	89	89	93	1-1/2	42	1/2	36	3/4	36	3/8	D12	D13	73	76	73

LICENSED PROFESSIONAL ENGINEER
LESLIE E. ROBERTSON
No. 34360
UNIVERSITY OF THE STATE OF NEW YORK

WORTHINGTON, SKILLING, HELLE & JACKSON — Civil & Structural Engineers

PROJECT: THE WORLD TRADE CENTER | TITLE: EXTERIOR WALL - TREE - INDEX | DATE: 4-7-67

REVISIONS
7-28-67
1-3-69
2-3-69
3-3-69
4-1-69
Printed 5-1-69

2-AB2-1 INDEX
2-AB2-2 PANEL ELEVATION
2-AB2-3 WELDING ELECTRODES & NOTES
2-AB2-4 LEVEL B
2-AB2-5 LEVEL B
2-AB2-6 LEVEL B - DETAILS
2-AB2-7 LEVEL C
2-AB2-8 LEVEL D
2-AB2-9 LEVEL D
2-AB2-10 LEVEL D - DETAILS
2-AB2-11 LEVEL D - DETAILS
2-AB2-12 LEVEL E
2-AB2-13 LEVEL E
2-AB2-14 LEVEL E
2-AB2-15 LEVEL E - DETAILS
2-AB2-16 LEVEL F
2-AB2-17 CORNER PANEL ELEVATION
2-AB2-18 CORNER PANEL DETAILS
2-AB2-19 CORNER PANEL DETAILS
2-AB2-20 CORNER PANEL DETAILS
2-AB2-21 CORNER PANEL DETAILS
2-AB2-22 CORNER PANEL SCHEDULE
2-AB2-23 SPANDREL SPLICE B
2-AB2-24 SPANDREL SPLICE D
2-AB2-25 COLUMN SPLICE DETAIL 102 & 103
2-AB2-26 VOID
2-AB2-27 VOID
2-AB2-28 COLUMN SPLICE DETAIL 41
2-AB2-29 COLUMN SPLICE DETAILS 700
2-AB2-30 COLUMN SPLICE DETAIL 501
2-AB2-31 SEAT DETAILS
2-AB2-32 SEAT DETAILS
2-AB2-33 SEAT DETAILS
2-AB2-34 SEAT DETAILS
2-AB2-35 SEAT DETAILS
2-AB2-36 SEAT DETAILS

SA-125 EXTERIOR WALL ELEVATION TO FL.9 - WALL 100
SA-126 " " " " - WALL 200
SA-127 " " " " - WALL 300
SA-128 " " " " - WALL 400

SB-125 EXTERIOR WALL ELEVATION TO FL.9 - WALL 100
SB-126 " " " " - WALL 200
SB-127 " " " " - WALL 300
SB-128 " " " " - WALL 400

LICENSED PROFESSIONAL ENGINEER
LESLIE E. ROBERTSON
No. 34360
UNIVERSITY OF THE STATE OF NEW YORK

WORTHINGTON, SKILLING, HELLE & JACKSON — Civil & Structural Engineers

PROJECT: THE WORLD TRADE CENTER | TITLE: EXTERIOR WALL - TREE - PANEL ELEVATION | DATE: 4-7-67

REVISIONS

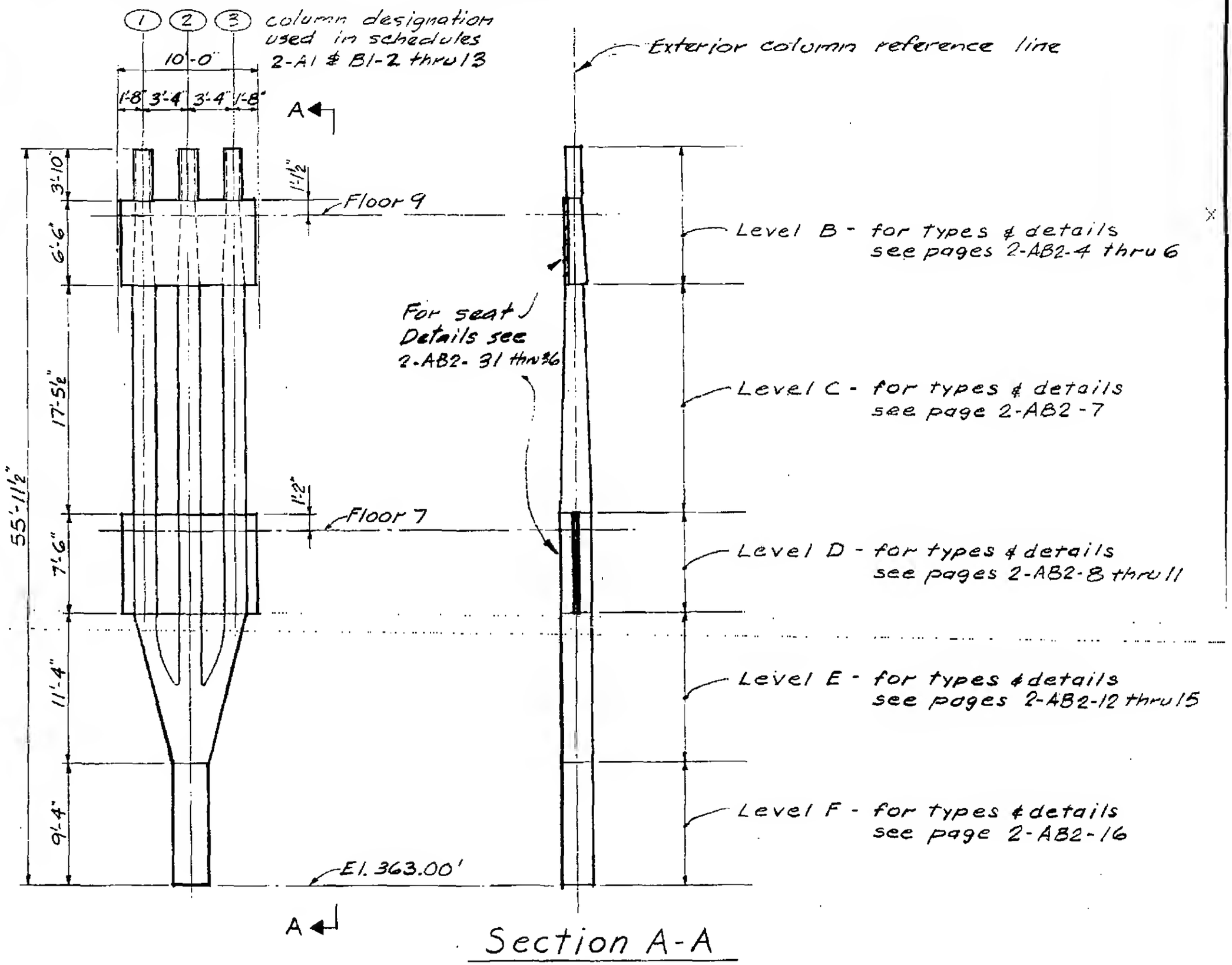

Section A-A

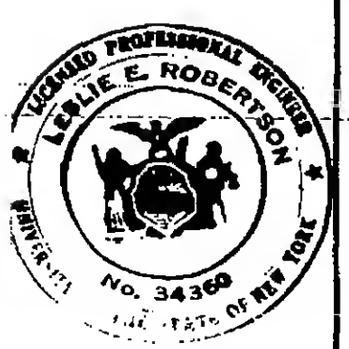

WORTHINGTON, SKILLING, HELLE & JACKSON — Civil & Structural Engineers

PROJECT: THE WORLD TRADE CENTER | TITLE: EXTERIOR WALL - TREE - WELDING ELECTRODES & NOTES | DATE: 4-7-67

REVISIONS

SCHEDULE OF WELDING ELECTRODES**

≠ For F_y = 36 ksi
1.) ASTM A233 class E70xx electrodes
2.) Grade SAW-2 Submerged Arc Welding
$36 < F_y \leq 50$
1.) ASTM A233 class E70xx electrodes
2.) Grade SAW-2 Submerged Arc Welding
$50 \leq F_y \leq 55$
1.) ASTM A233 class E70xx electrodes
2.) Submerged Arc Welding *
$55 \leq F_y \leq 60$
1.) ASTM A316 class E80xx electrodes
2.) Submerged Arc Welding *
$60 \leq F_y \leq 65$
1.) ASTM A316 class E80xx electrodes
2.) Submerged Arc Welding *
$65 \leq F_y \leq 70$
1.) ASTM A316 class E80xx electrodes
2.) Submerged Arc Welding *
$70 \leq F_y \leq 80$
1.) ASTM A316 class E90xx electrodes
2.) Submerged Arc Welding *
$80 \leq F_y \leq 90$
1.) ASTM A316 class E100xx electrodes
2.) Submerged Arc Welding *
$90 \leq F_y \leq 100$
1.) ASTM A316 class E110xx electrodes
2.) Submerged Arc Welding *

* Submerged arc welding shall conform to the specifications.
** Low hydrogen electrodes shall be used for all manual arc welding.

≠ F_y indicated is the lower F_y of the plates joined

GENERAL NOTES

1. All welding to be done using electrodes as scheduled this sheet.
2. F.P.⟩— indicates full penetration weld.

LICENSED PROFESSIONAL ENGINEER
LESLIE E. ROBERTSON
No. 34360
UNIVERSITY OF THE STATE OF NEW YORK

2-AB2-3

WORTHINGTON, SKILLING, HELLE & JACKSON — Civil & Structural Engineers

PROJECT: THE WORLD TRADE CENTER | TITLE: EXTERIOR WALL - TREE - LEVEL B | DATE: 4-7-67

REVISIONS

7-17-67
7-28-67

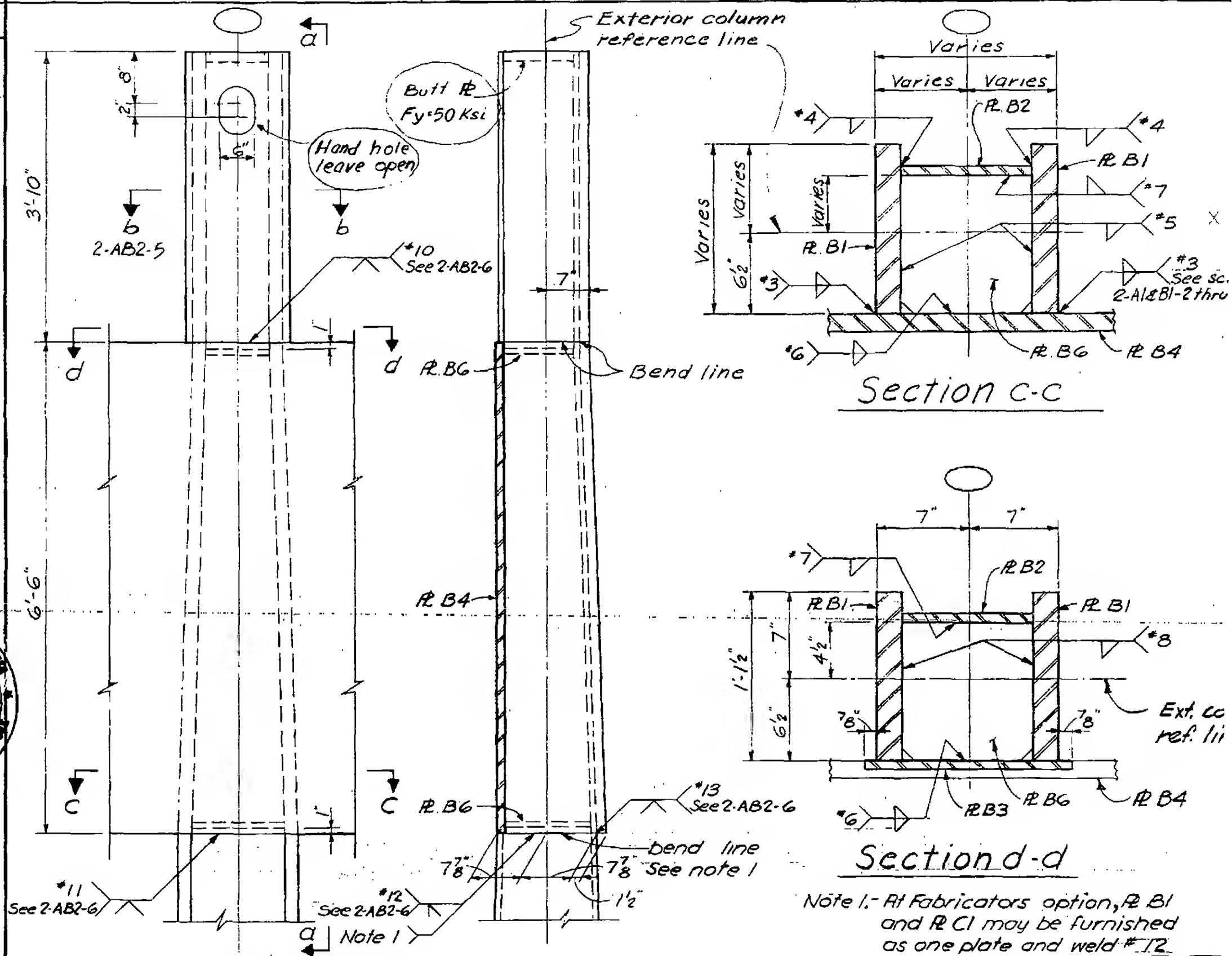

Note 1.- At Fabricators option, PL B1 and PL C1 may be furnished as one plate and weld #12 omitted.

2-AB2-4

WORTHINGTON, SKILLING, HELLE & JACKSON — Civil & Structural Engineers

PROJECT: THE WORLD TRADE CENTER | TITLE: EXTERIOR WALL - TREE - LEVEL 13 | DATE: 4-7-67

REVISIONS

7-28-67

COLUMN TYPE	PLATE B1	PLATE B2	PLATE B3		PLATE B6	WELD #1	WELD #2	WELD #4	WELD #5	WELD #6	WELD #7	WELD #8	
B02	1 9/16"	7/16"	7/16"		3/4"	3/8"	3/8"	3/8"	3/8"	3/8"	3/8"	3/8"	
B03	1 5/8"	1/2"	1/2"		3/4"	3/8"	3/8"	3/8"	3/8"	3/8"	3/8"	3/8"	
B04	1 11/16"	1/2"	1/2"		3/4"	3/8"	3/8"	3/8"	3/8"	3/8"	3/8"	3/8"	
B05	1 7/8"	9/16"	9/16"		3/4"	3/8"	3/8"	3/8"	3/8"	3/8"	3/8"	3/8"	
B06	2 1/16"	5/8"	5/8"		3/4"	3/8"	3/8"	3/8"	3/8"	3/8"	3/8"	3/8"	
B07	2 3/16"	5/8"	5/8"		7/8"	3/8"	3/8"	3/8"	3/8"	3/8"	3/8"	3/8"	
B08	2 5/16"	11/16"	11/16"		7/8"	1/2"	1/2"	1/2"	1/2"	1/2"	1/2"	3/8"	
B09	2 3/8"	11/16"	11/16"		7/8"	1/2"	1/2"	1/2"	1/2"	1/2"	1/2"	3/8"	
B10	2 7/16"	11/16"	11/16"		7/8"	1/2"	1/2"	1/2"	1/2"	1/2"	1/2"	3/8"	
B11	2 1/2"	3/4"	3/4"		7/8"	1/2"	1/2"	1/2"	1/2"	1/2"	1/2"	3/8"	
B12	2 3/4"	13/16"	13/16"		1"	1/2"	1/2"	1/2"	1/2"	1/2"	1/2"	1/2"	
B13	2 15/16"	7/8"	7/8"		1"	1/2"	1/2"	1/2"	1/2"	1/2"	1/2"	1/2"	
B14	3	7/8"	7/8"		1"	1/2"	1/2"	1/2"	1/2"	1/2"	1/2"	1/2"	
B15	3 1/8"	15/16"	15/16"		1"	1/2"	1/2"	1/2"	1/2"	1/2"	1/2"	1/2"	
B16	3 1/4"	15/16"	15/16"		1"	1/2"	1/2"	1/2"	1/2"	1/2"	1/2"	1/2"	
B17	3 3/8"	1"	1"		1"	1/2"	1/2"	1/2"	1/2"	1/2"	1/2"	1/2"	
B18	3 7/16"	1"	1"		1"	1/2"	1/2"	1/2"	1/2"	1/2"	1/2"	1/2"	
B19	3 1/2"	1"	1"		1"	1/2"	1/2"	1/2	1/2"	1/2"	1/2"	1/2"	

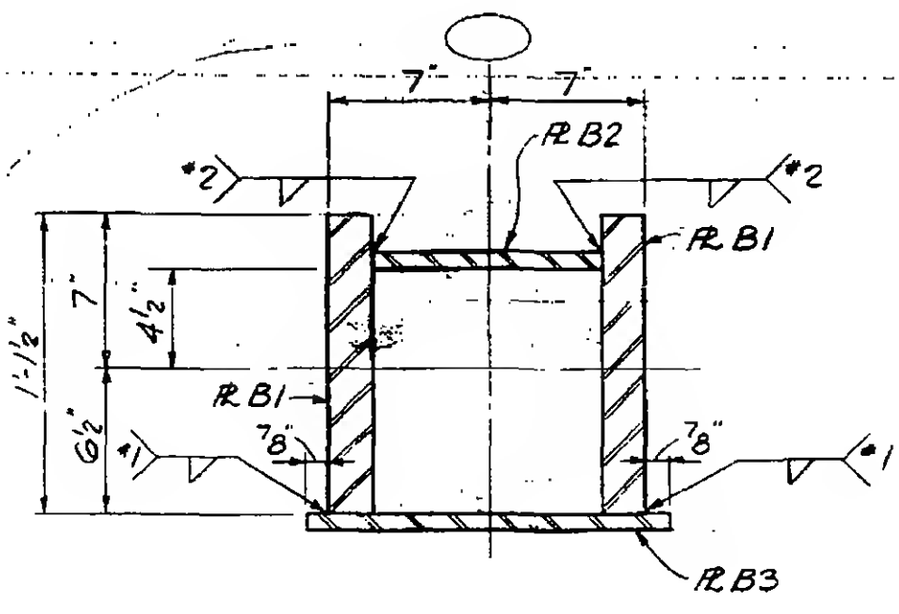

Section b-b

2-AB2-5

LICENSED PROFESSIONAL ENGINEER
LESLIE E. ROBERTSON
No. 34360
UNIVERSITY OF THE STATE OF NEW YORK

WORTHINGTON, SKILLING, HELLE & JACKSON · Civil & Structural Engineers

PROJECT THE WORLD TRADE CENTER | TITLE EXTERIOR WALL-TREE-LEVEL B DETAILS | DATE 4-7-67

REVISIONS

7-17-67

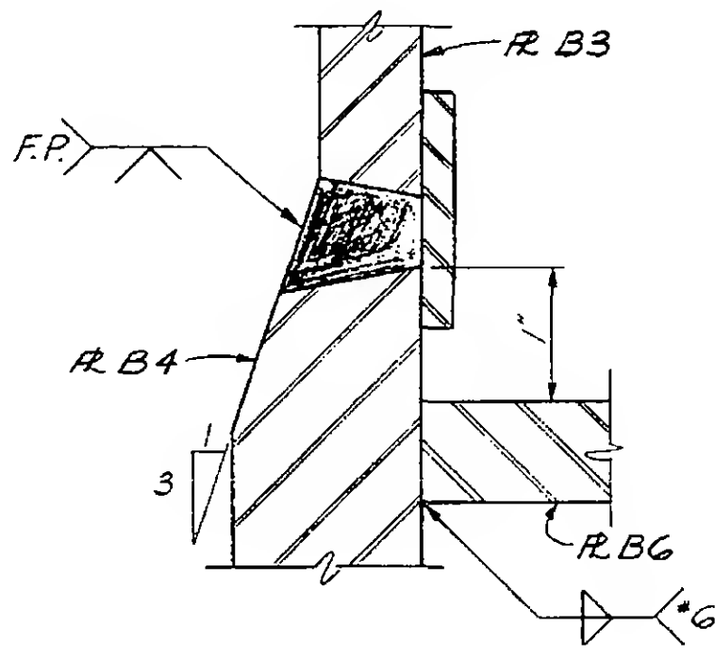

Detail-Weld #10

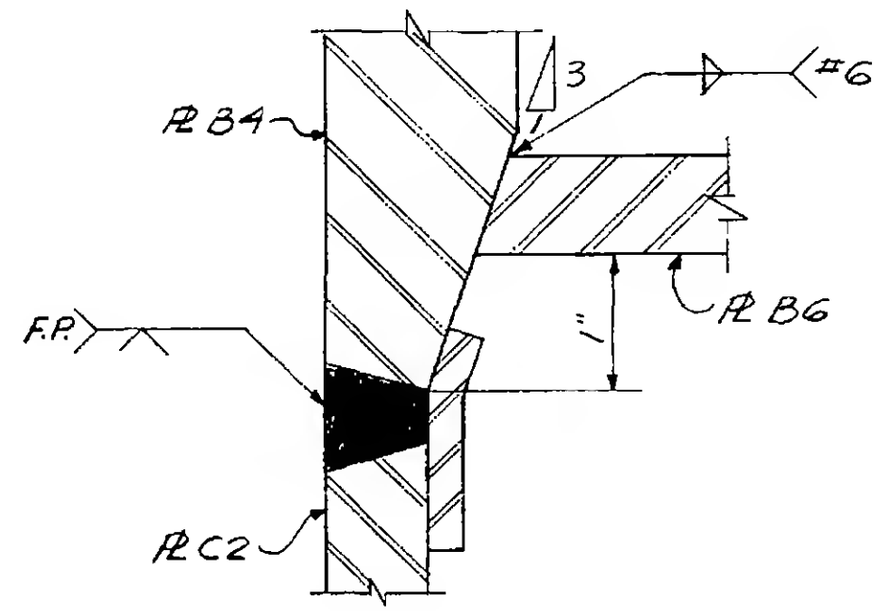

Detail-Weld #11

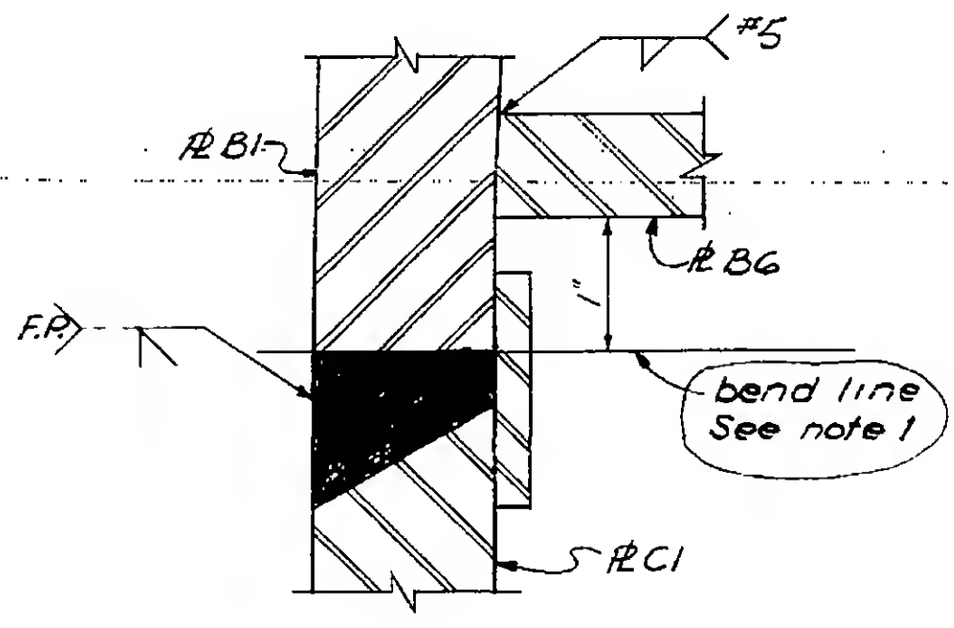

Detail-Weld #12

Note 1:- At Fabricators option, PL B1 and PL C1 may be furnished as one plate and weld #12 omitted.

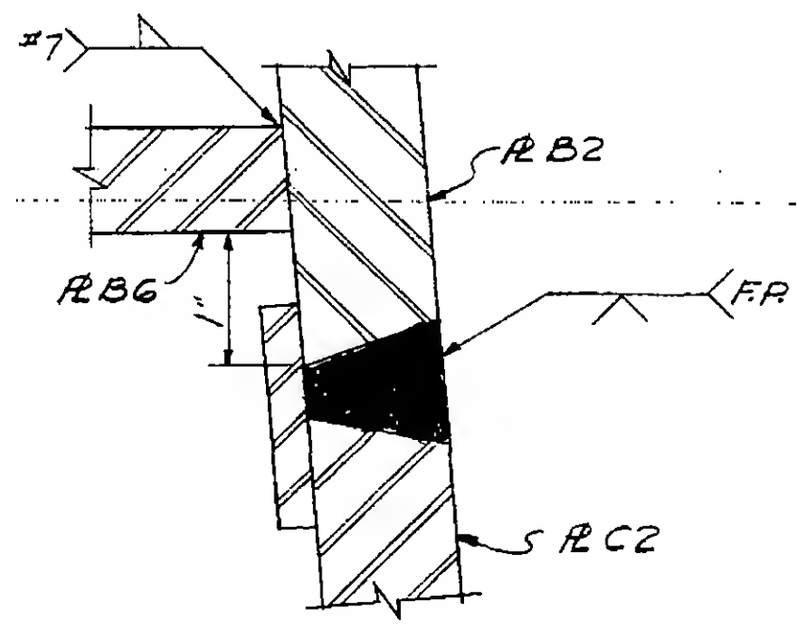

Detail-Weld #13

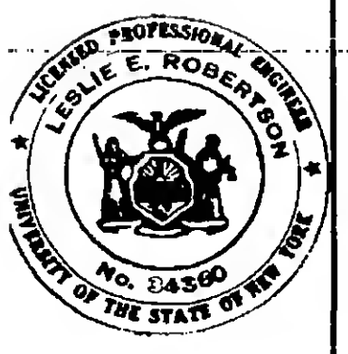

2-AB2-6

WORTHINGTON, SKILLING, HELLE & JACKSON — Civil & Structural Engineers

PROJECT: THE WORLD TRADE CENTER | TITLE: EXTERIOR WALL-TREE-LEVEL C | DATE: 4-7-67

REVISIONS

COLUMN TYPE	PLATE C1	PLATE C2	WELD #1
C02	1 9/16"	7/16"	7/16"
C03	1 5/8"	1/2"	1/2"
C04	1 11/16"	1/2"	1/2"
C05	1 7/8"	9/16"	1/2"
C06	2 1/16"	5/8"	1/2"
C07	2 3/16"	5/8"	1/2"
C08	2 5/16"	11/16"	1/2"
C09	2 3/8"	11/16"	1/2"
C10	2 7/16"	11/16"	1/2"
C11	2 1/2"	3/4"	1/2"
C12	2 3/4"	13/16"	9/16"
C13	2 15/16"	7/8"	9/16"
C14	3	7/8"	9/16"
C15	3 1/8"	15/16"	9/16"
C16	3 1/4"	15/16"	9/16"
C17	3 3/8"	1"	9/16"
C18	3 7/16"	1"	9/16"
C19	3 1/2"	1"	9/16"

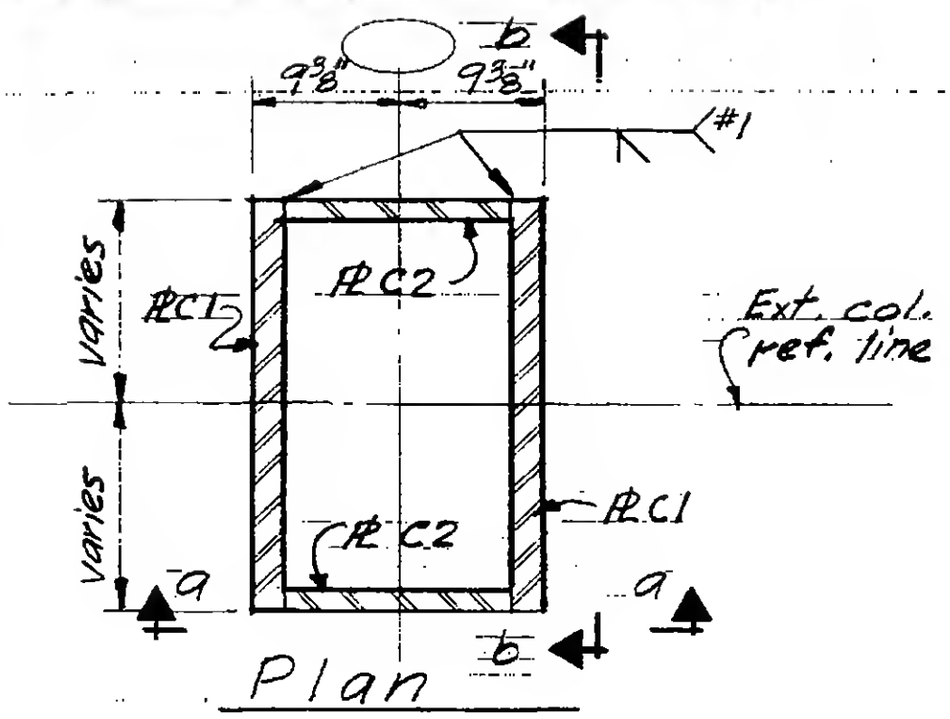

Plan

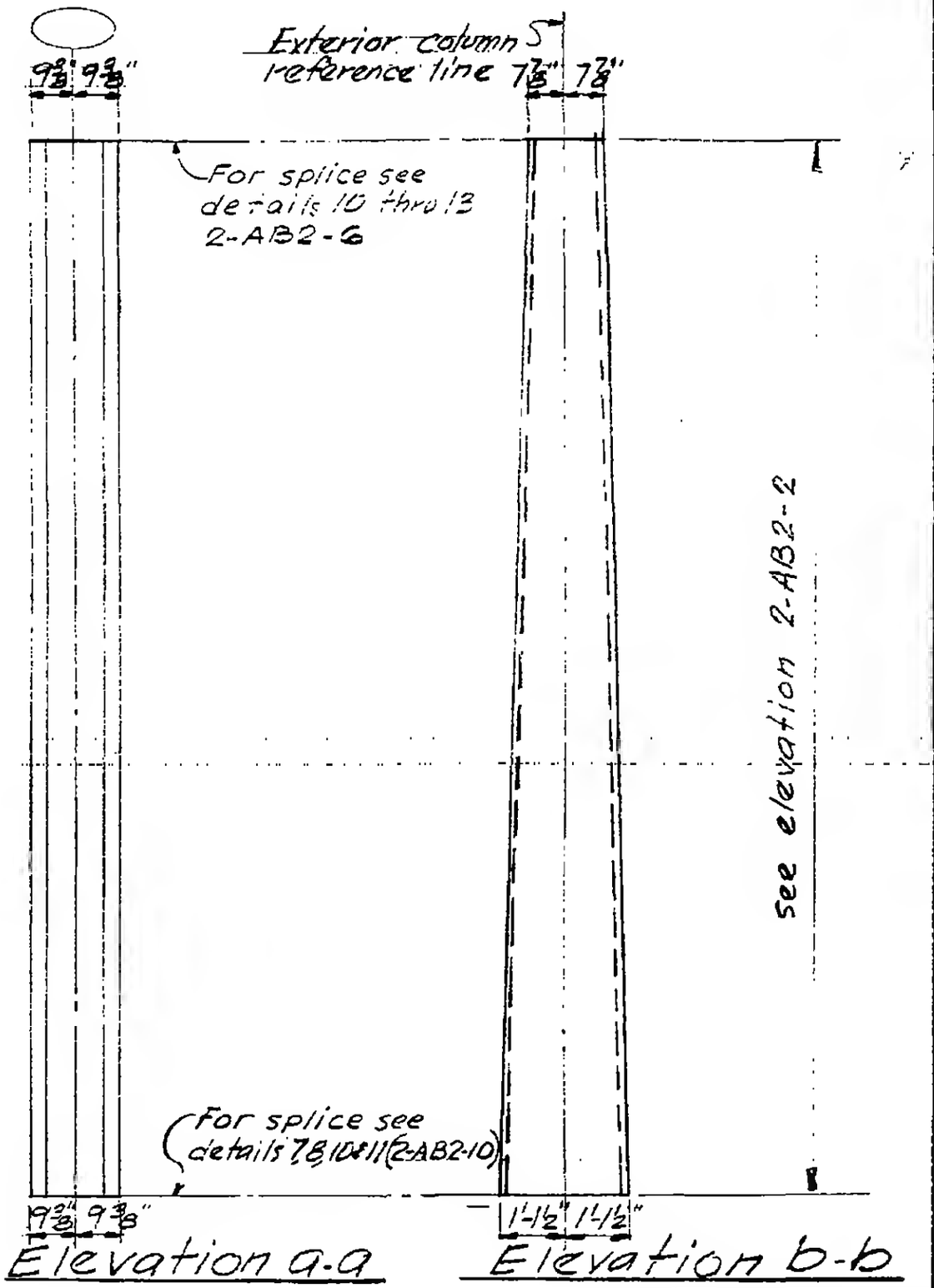

Elevation a-a

Elevation b-b

2-AB2-7

LICENSED PROFESSIONAL ENGINEER — LESLIE E. ROBERTSON — No. 34360 — UNIVERSITY OF THE STATE OF NEW YORK

WORTHINGTON, SKILLING, HELLE & JACKSON — Civil & Structural Engineers

PROJECT: THE WORLD TRADE CENTER | TITLE: EXTERIOR WALL - TREE - LEVEL D | DATE: 4-7-67

REVISIONS

COLUMN TYPE	PLATE D1	PLATE D2	PLATE D5	PLATE D6	WELD #1	WELD #3	WELD #4	WELD #5
D02	1 1/4"	1/2"	1/2	5/8	1/2	3/8	3/8	3/8
D03	1 3/8"	9/16"	1/2	3/4	1/2	3/8		3/8
D04	1 3/4"	5/8"	1/2	3/4	1/2	3/8		3/8
D05	1 3/4"	11/16"	1/2	7/8	1/2	3/8		3/8
D06	1 3/4"	3/4"	1/2	3/4"	1/2	3/8		3/8
D07	2 1/4"	7/8"	5/8	3/4"	9/16	3/8		3/8
D08	2 1/2"	15/16"	3/4	7/8"	9/16	1/2		1/2
D09	2 5/8"	1"	3/4	1"	9/16	1/2		1/2
D10	2 3/4"	1"	3/4	1"	9/16	1/2		1/2
D11	2 7/8"	1"	3/4	1"	9/16	1/2	3/8	1/2

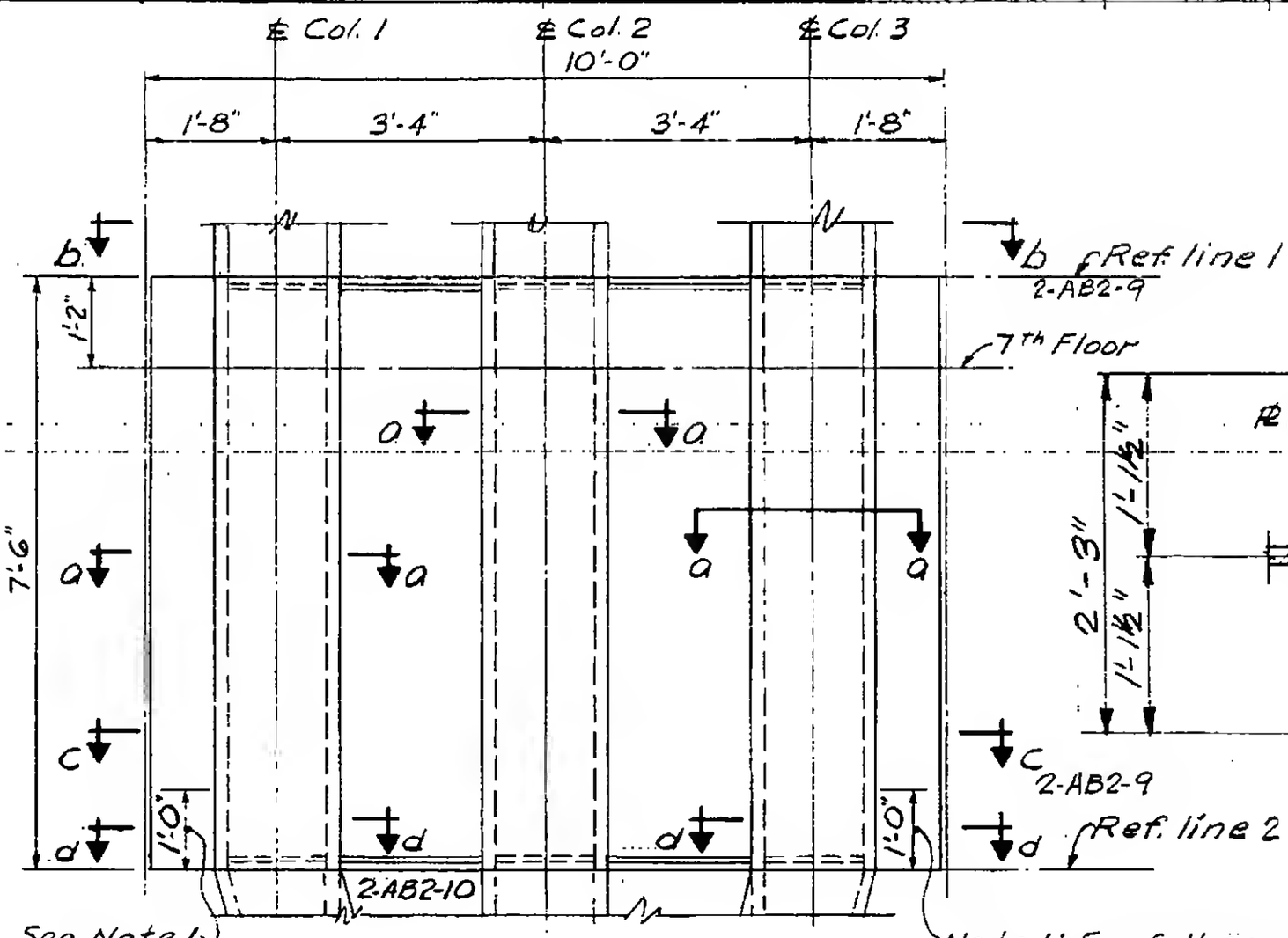

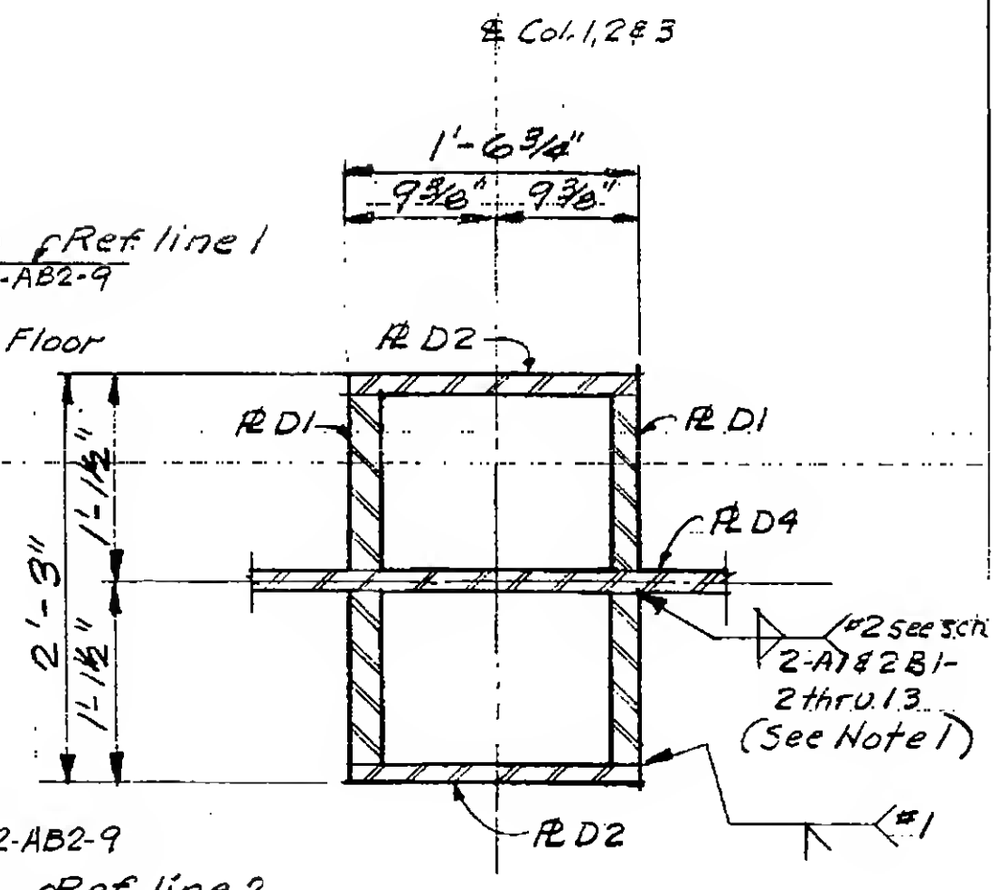

Section a-a

Note 1: For full penetration weld 12" long between PL's D1 & D4 see sect. d-d, 2-AB2-10 Applies cols 1 & 3 only

2-AB2-8

WORTHINGTON, SKILLING, HELLE & JACKSON — Civil & Structural Engineers

PROJECT: THE WORLD TRADE CENTER | TITLE: EXTERIOR WALL-TREE- LEVEL D | DATE: 4-7-67

REVISIONS

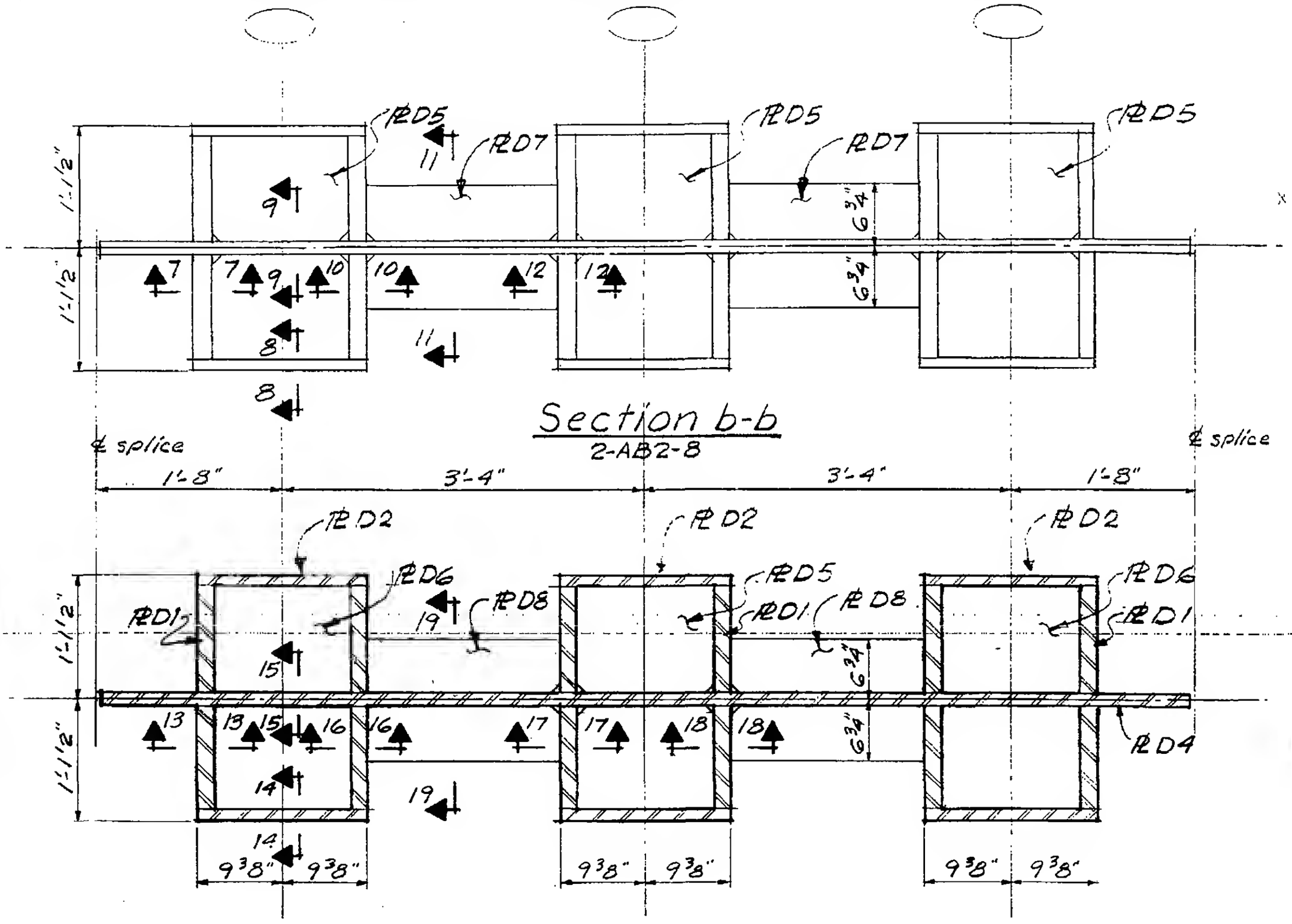

Section b-b
2-AB2-8

Section c-c
2-AB2-8

2-AB2-9

WORTHINGTON, SKILLING, HELLE & JACKSON — Civil & Structural Engineers

PROJECT: THE WORLD TRADE CENTER

TITLE: EXTERIOR WALL TREE-LEVEL D DETAILS

DATE: 4-7-67

REVISIONS

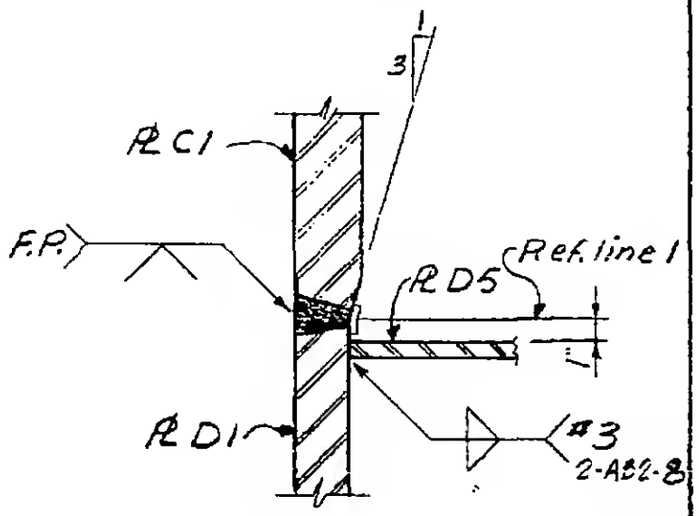

Detail 7

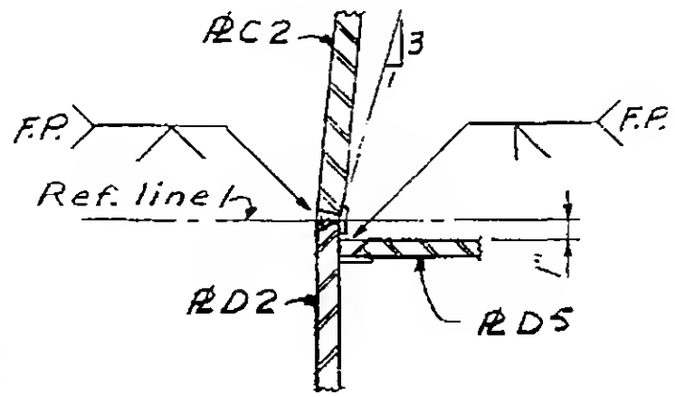

Detail 8

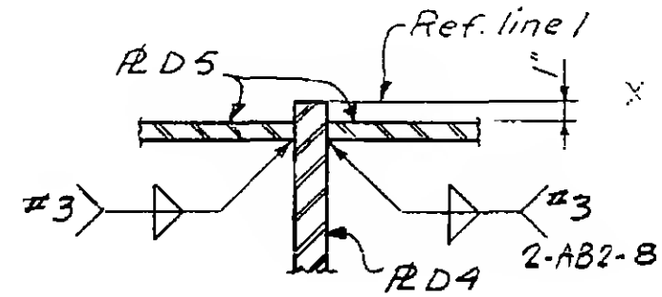

Detail 9

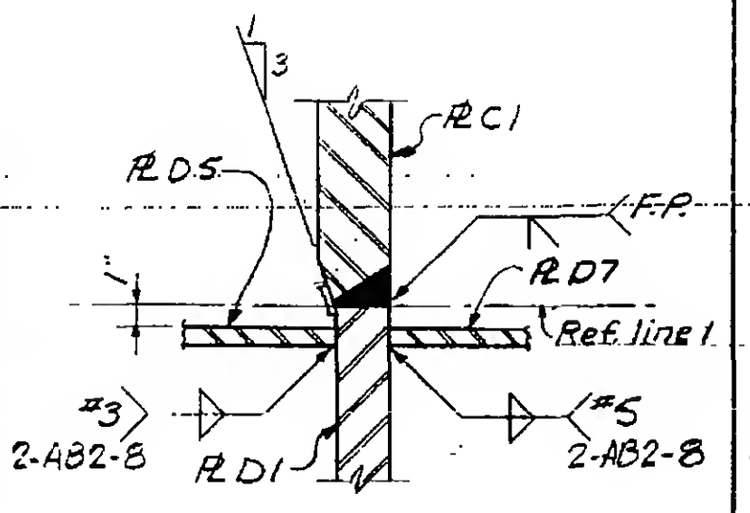

Detail 10
Detail 12 opp. hand

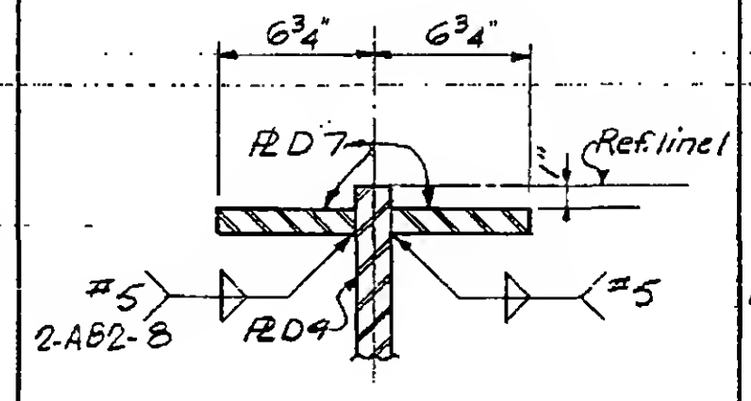

Detail 11

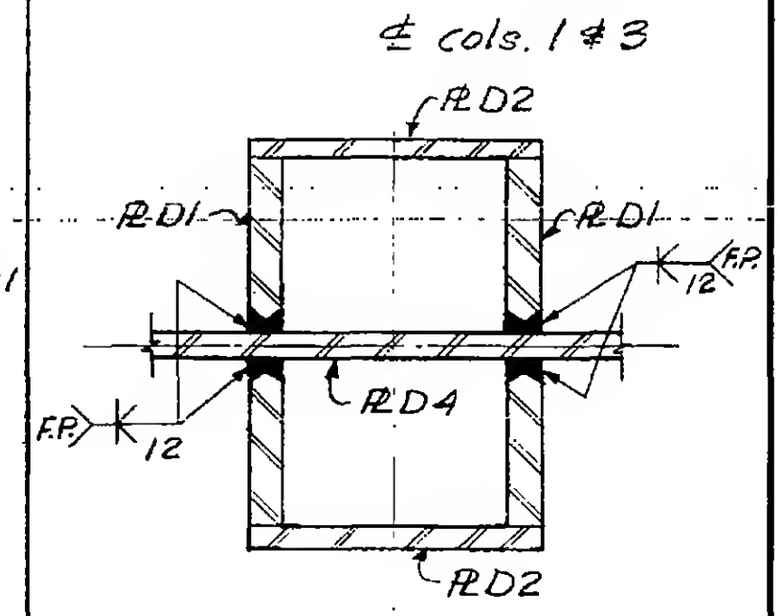

Section d-d

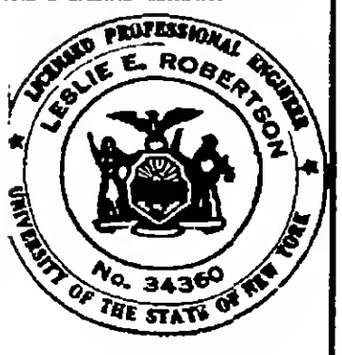

2-AB2-10

WORTHINGTON, SKILLING, HELLE & JACKSON — Civil & Structural Engineers

PROJECT: THE WORLD TRADE CENTER | TITLE: EXTERIOR WALL TREE-LEVEL D DETAILS | DATE: 4-7-67

REVISIONS

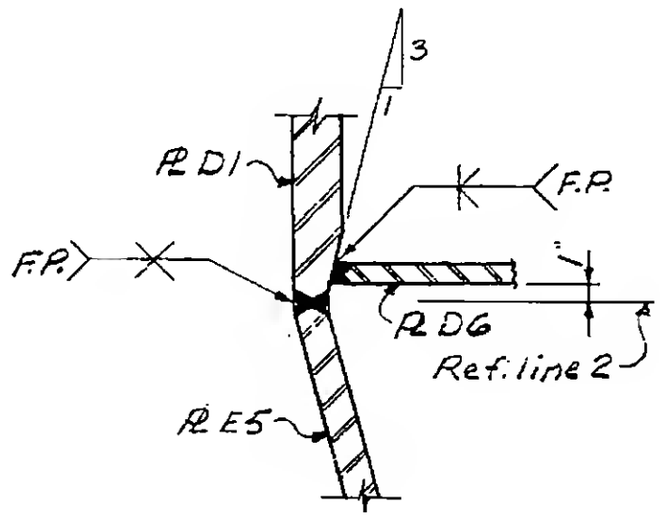

Detail 13

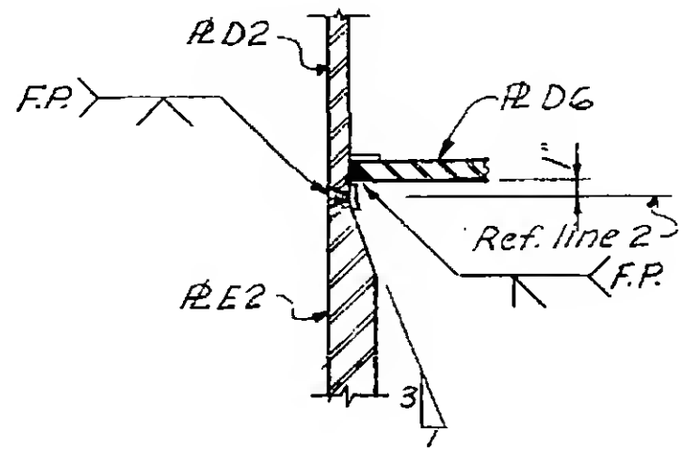

Detail 14

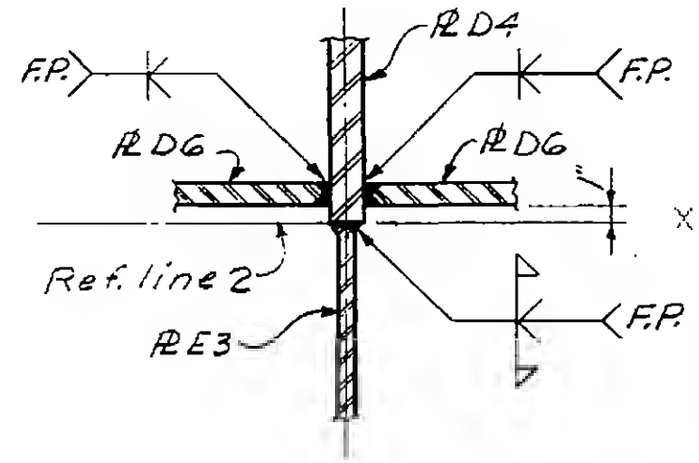

Detail 15

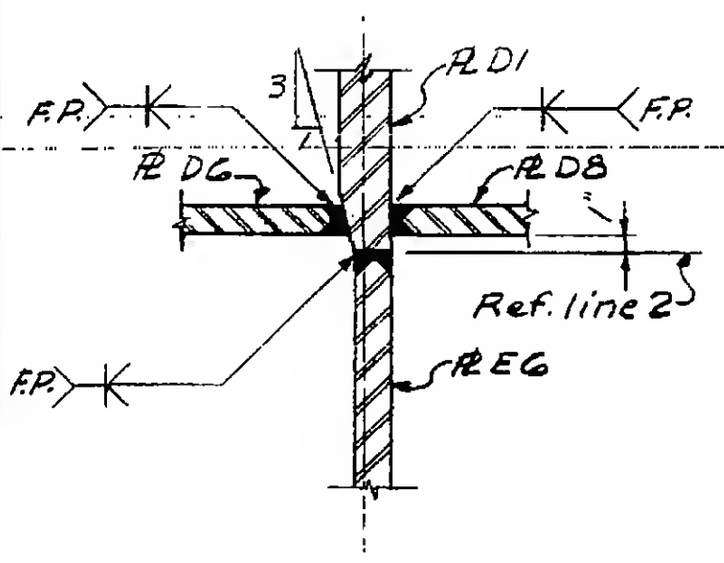

Detail 16

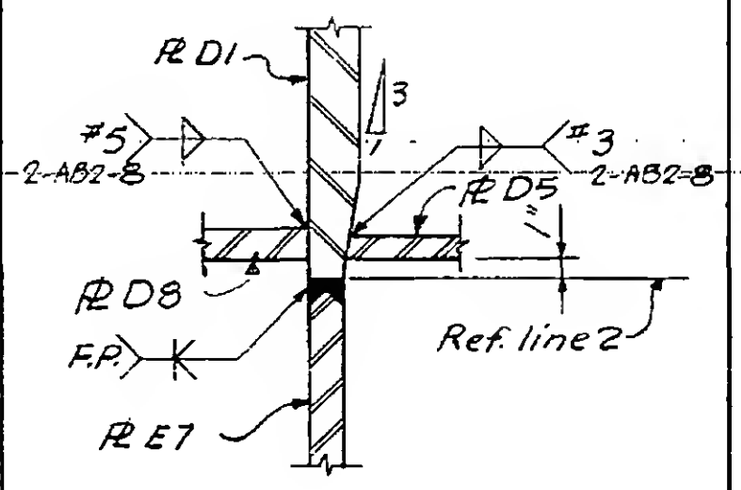

Detail 17
Detail 18 opp. hand

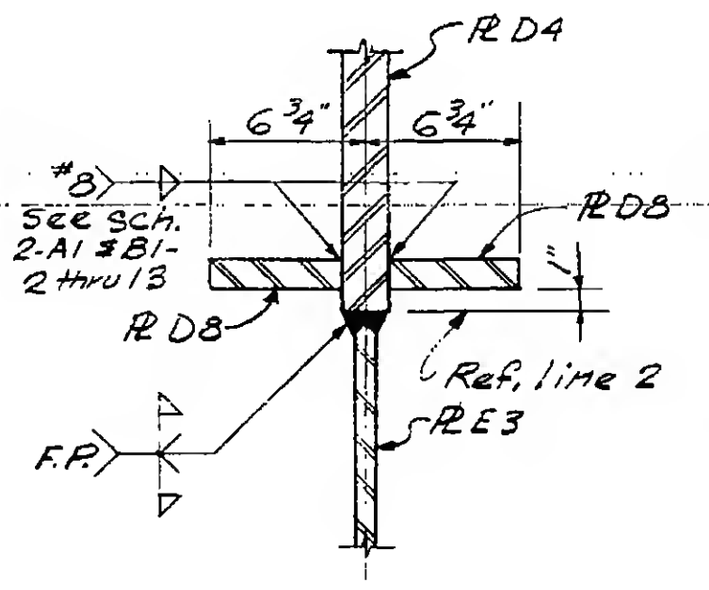

Detail 19

LICENSED PROFESSIONAL ENGINEER
LESLIE E. ROBERTSON
No. 34360
UNIVERSITY OF THE STATE OF NEW YORK

2-AB2-11

WORTHINGTON, SKILLING, HELLE & JACKSON — Civil & Structural Engineers

PROJECT: THE WORLD TRADE CENTER | TITLE: EXTERIOR WALL-TREE-LEVEL E | DATE: 4-7-67

REVISIONS

12-18-67

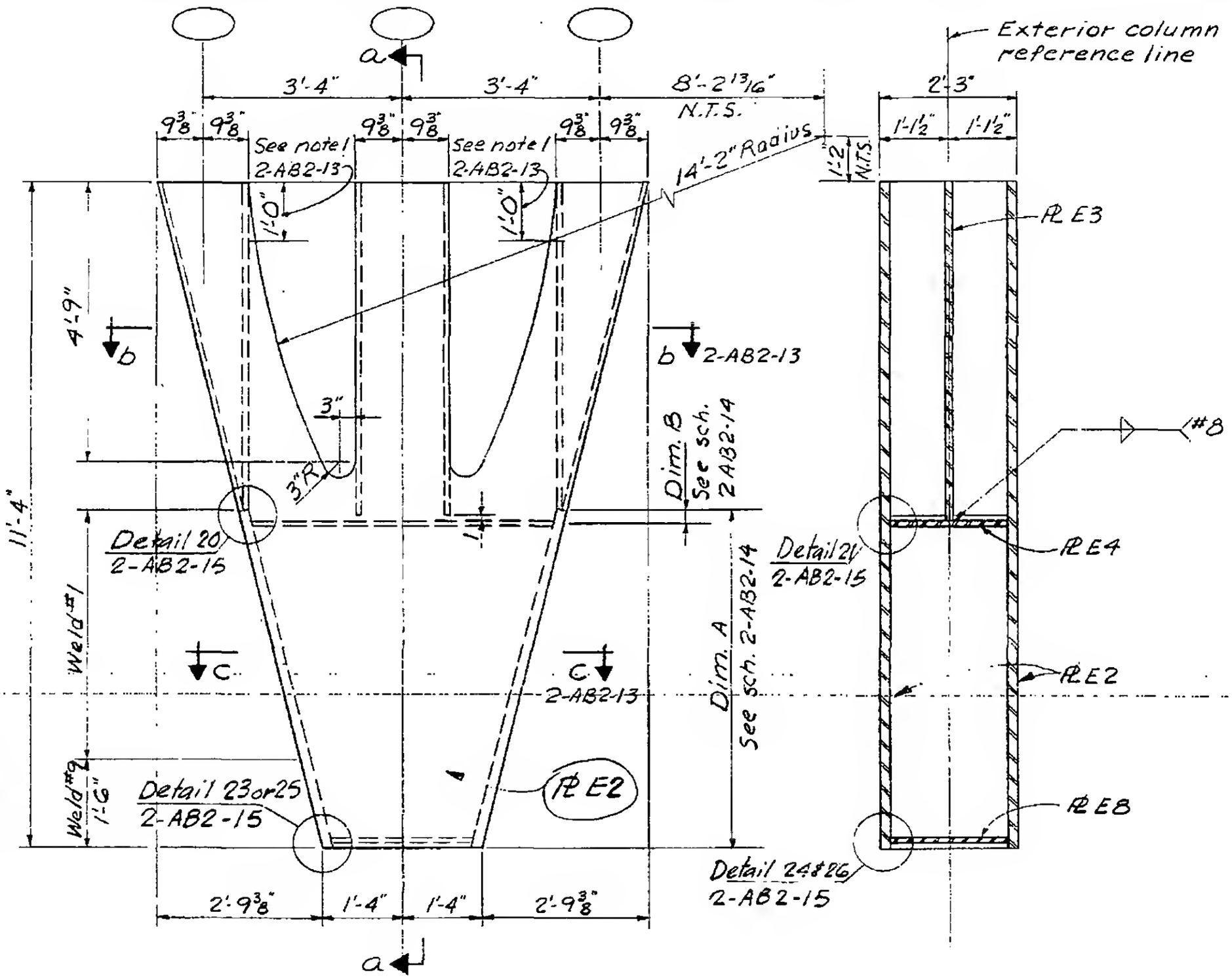

Section a-a

2-AB2-12

WORTHINGTON, SKILLING, HELLE & JACKSON — Civil & Structural Engineers

PROJECT: THE WORLD TRADE CENTER | TITLE: EXTERIOR WALL-TREE - LEVEL E | DATE: 4-7-67

REVISIONS

Note: For welds #1 thru #4, #8 & #9 see 2-AB2-14
For welds #5 thru #7 see sch. 2-A1 & B1-2 thru 13

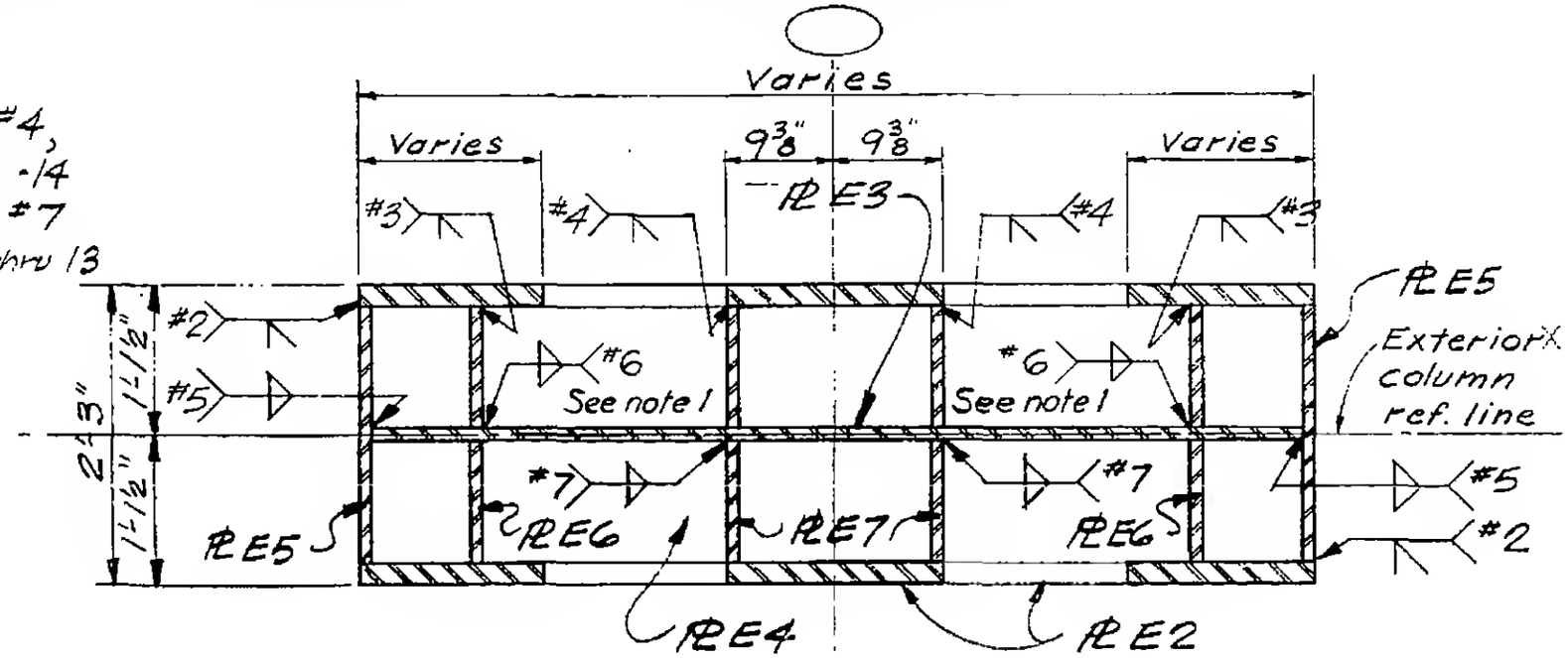

Section b-b

Note 1
Double bevel complete penetration groove weld 12" long at top.

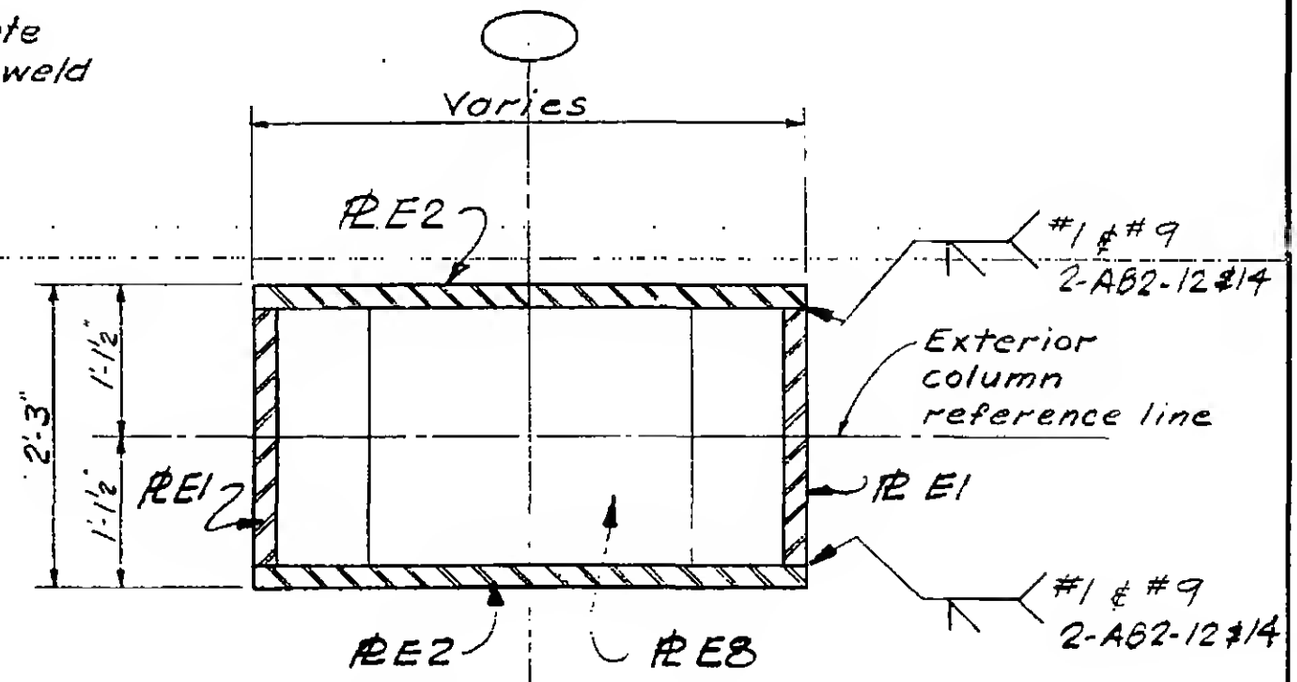

Section C-C

2-AB2-13

N, SKILLING, HELLE & JACKSON — Civil & Structural Engineers

RLD TRADE CENTER | TITLE EXTERIOR WALL-TREE - LEVEL E | DATE 4-7-67

weld's #1 thru #4,
& #9 see 2-AB2-14
welds #5 thru #7
sch. 2-A1 & B1-2 thru 13

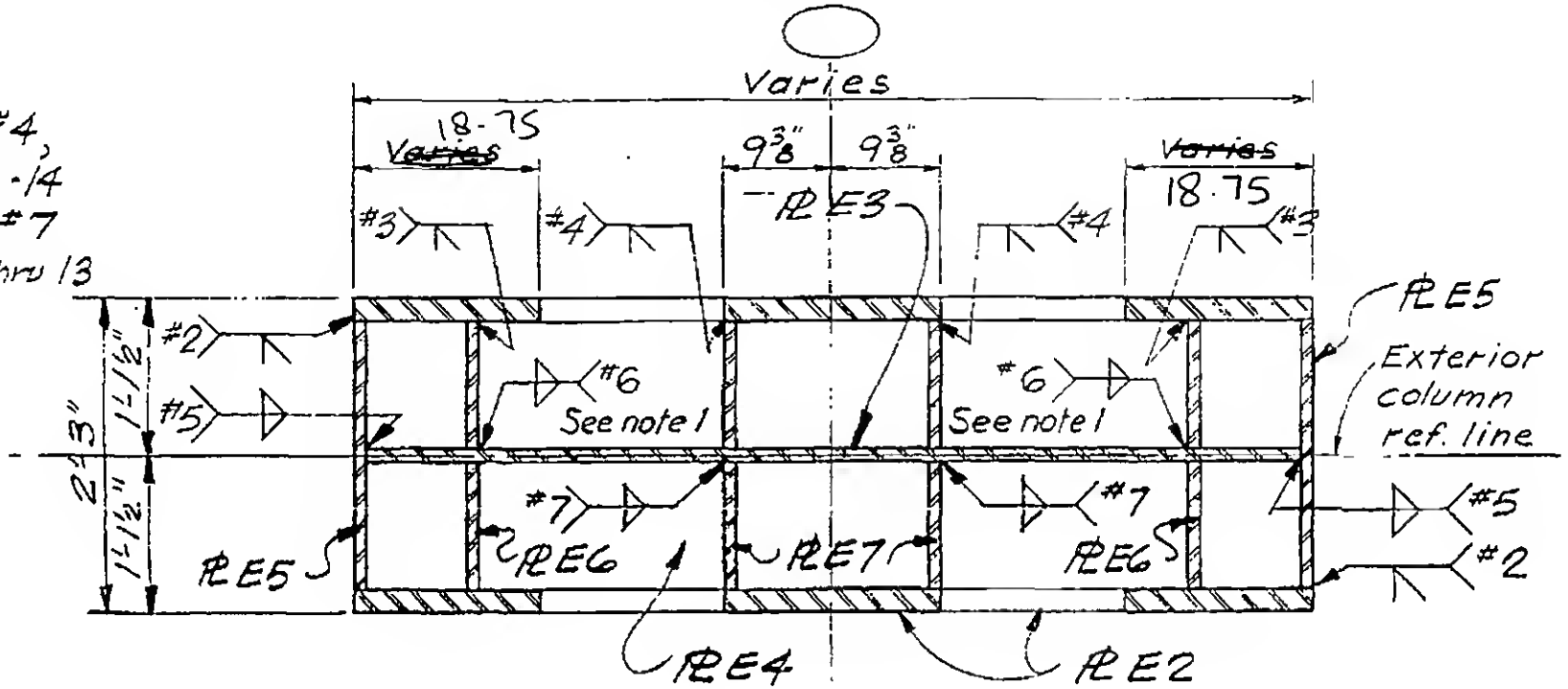

Section b-b

Note 1
Double bevel complete penetration groove weld 12" long at top.

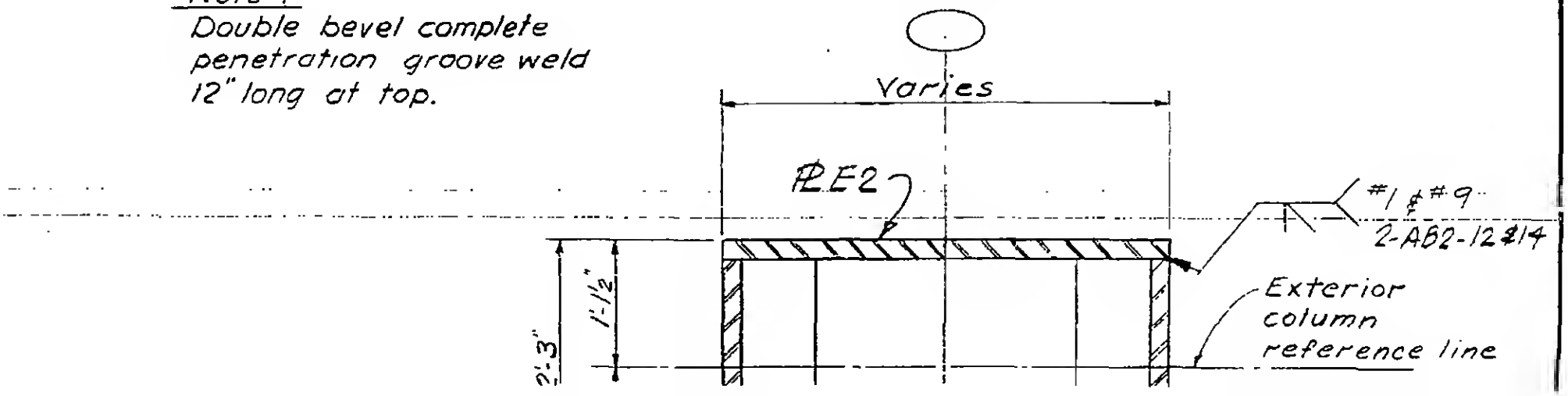

WORTHINGTON, SKILLING, HELLE & JACKSON — Civil & Structural Engineers

PROJECT: THE WORLD TRADE CENTER | TITLE: EXTERIOR WALL - TREE - LEVEL E | DATE: 4-7-67

REVISIONS

TYPE	℞ E1	℞ E2	℞ E3	℞ E4	℞ E5	℞ E6	℞ E7	℞ E8	WELD #1	WELD #2	WELD #3	WELD #4	WELD #8	WELD #9	DIM. A	DIM B
E04	2¼"	1"	¾	½	13/16	13/16	13/16	⅞	⅝	9/16	9/16	9/16	⅜	¾	5'-9"	1"
E05	2⅜"	1"	↑	½	⅞	⅞	⅞	⅞	⅝	9/16	9/16	9/16	↑	¾	5'-9½"	1"
E06	2⅝"	1⅛"		¾	⅞	⅞	⅞	1	⅝	9/16	9/16	9/16		¾	5'-10½"	1"
E07	3¼"	1⅜"		¾	13/16	13/16	13/16	1¼	⅝	⅝	⅝	⅝		⅞	6'-1⅛"	1"
E08	3⅜"	1⅜"		¾	13/16	13/16	13/16	1¼	⅝	⅝	⅝	⅝		⅞	6'-1¾"	1"
E09	3⅜"	1½"		¾	13/16	13/16	13/16	1¼	11/16	⅝	⅝	⅝		⅞	6'-1¾"	1"
E10	3½"	1½"	↓	¾	13/16	13/16	13/16	1⅜	11/16	⅝	⅝	⅝	↓	⅞	6'-2¼"	1"
E11	3⅝"	1½"	¾	¾	13/16	13/16	13/16	1⅜	11/16	⅝	⅝	⅝	⅜	⅞	6'-2¾"	1"
E13	4¼"	1⅞"	¾	¾	1½	1½	1½	1½	¾	11/16	11/16	11/16	⅜	1	6'-5⅜"	2⅜"
E14	4¼"	2½"	↑	¾	13/16	13/16	13/16	1½	13/16	⅝	⅝	⅝	↑	1	6'-5⅜"	2⅜"
E15	4½"	2½"		⅞	13/16	13/16	13/16	1½	13/16	⅝	⅝	⅝		1	6'-6⅜"	2⅜"
E16	4¾"	2¼"		⅞	1¾	1¾	1¾	1⅝	¾	¾	¾	¾		1	6'-7½"	4½"
E17	5"	2¾"		1	1¾	1¾	1¾	1¾	⅞	¾	¾	¾		1⅛	6'-8½"	5½"
E18	5"	2⅞"	↓	1	1¾	1¾	1¾	1¾	⅞	¾	¾	¾	↓	1⅛	6'-8½"	5½"
E19	5"	3"	¾	1	1⅞	1⅞	1⅞	1¾	⅞	¾	¾	¾	⅜	1⅛	6'-8½"	5½"

LICENSED PROFESSIONAL ENGINEER
LESLIE E. ROBERTSON
No. 34360
UNIVERSITY OF THE STATE OF NEW YORK

2-AB2-14

WORTHINGTON, SKILLING, HELLE & JACKSON — Civil & Structural Engineers

PROJECT: THE WORLD TRADE CENTER | TITLE: EXTERIOR WALL-TREE - LEVEL E DETAILS | DATE: 4-7-67

REVISIONS

12-18-67

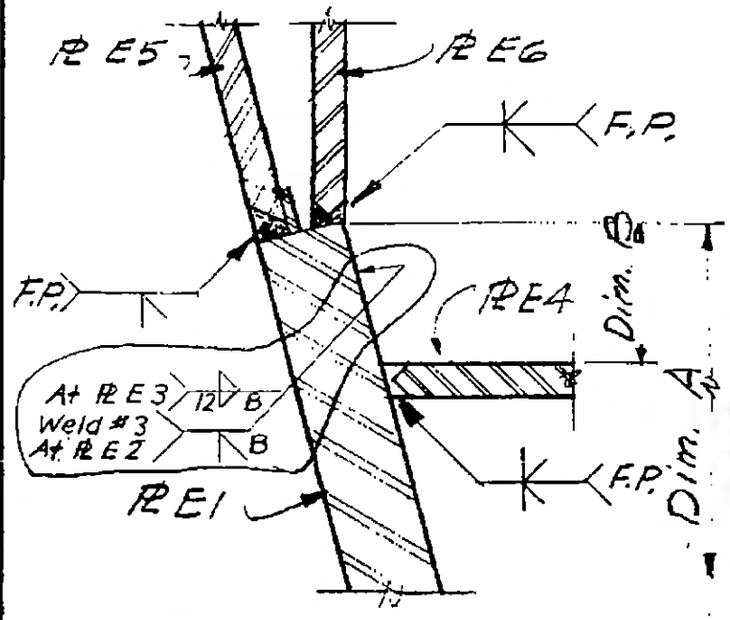

Note: See 2-AB2-12 for plates and dim. A & B

DETAIL 20

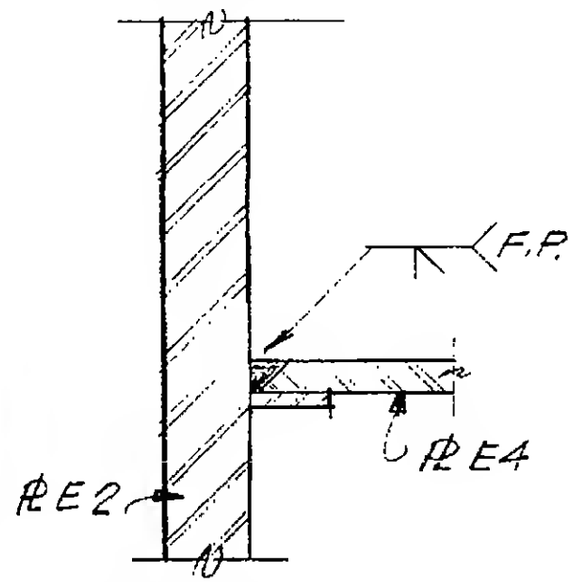

Note: There is no weld inside center colomn

DETAIL 21

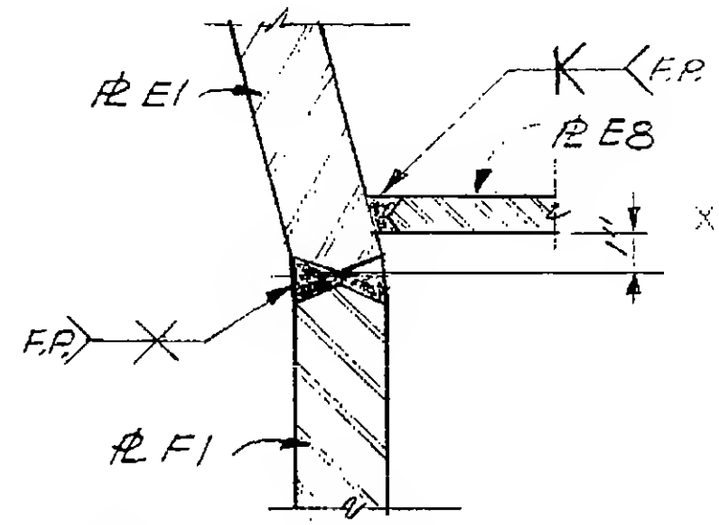

Note: PL E1 & PL F1 may be furnished as one PL bent.

DETAIL 23

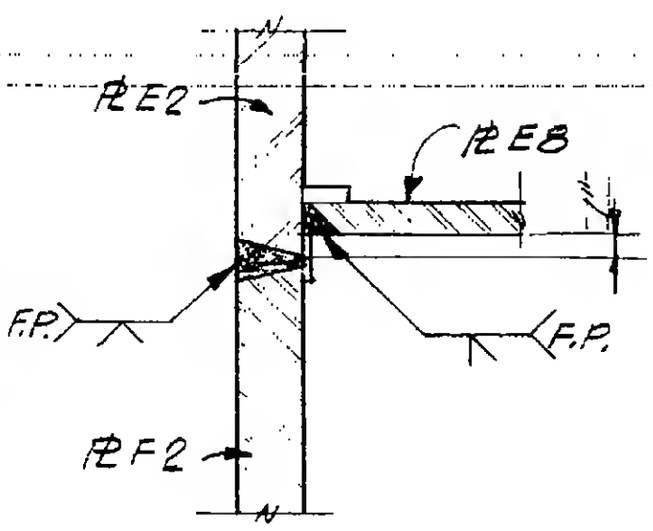

DETAIL 24

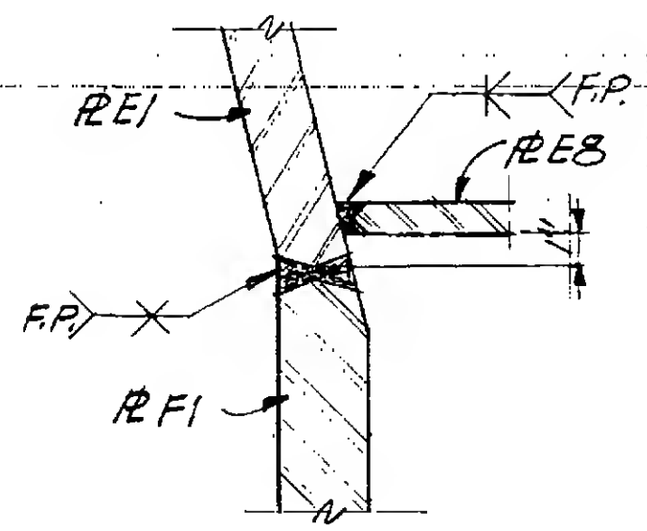

DETAIL 25

Use for type F20 & F21 only

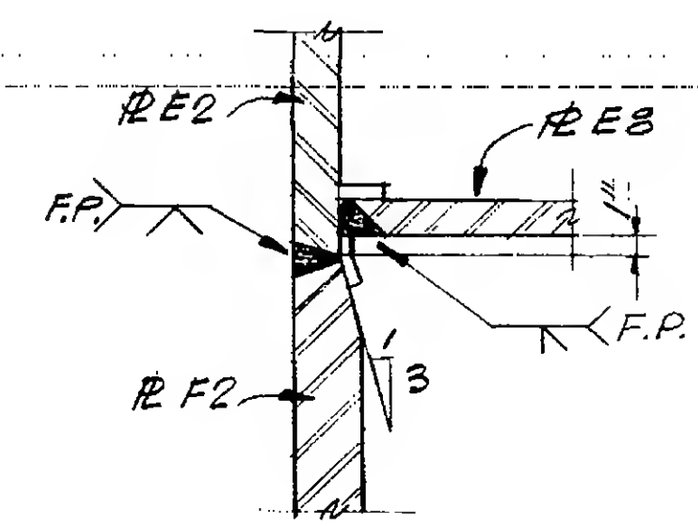

DETAIL 26

Use for type F20 & F21 only

LICENSED PROFESSIONAL ENGINEER LESLIE E. ROBERTSON No. 34360 STATE OF NEW YORK

2-AB2-15

WORTHINGTON, SKILLING, HELLE & JACKSON — Civil & Structural Engineers

PROJECT: THE WORLD TRADE CENTER | TITLE: EXTERIOR WALL - TREE - LEVEL F | DATE: 4-7-67

REVISIONS

COLUMN TYPE	PLATE F1	PLATE F2		WELD #1	WELD #2
F04	2 1/4"	1"		5/8"	3/4
F05	2 3/8"	1"		5/8"	3/4
F06	2 5/8"	1 1/8"		5/8"	3/4
F07	3 1/4"	1 3/8"		5/8"	7/8
F08	3 3/8"	1 3/8"		5/8"	7/8
F09	3 3/8"	1 1/2"		11/16"	7/8
F10	3 1/2"	1 1/2"		11/16"	7/8
F11	3 5/8"	1 1/2"		11/16"	7/8
F13	4 1/4"	1 7/8"		3/4"	1
F14	4 1/4"	2 1/2"		13/16"	1
F15	4 1/2"	2 1/2"		13/16"	1
F16	4 3/4"	2 1/4"		3/4"	1
F17	5"	2 3/4"		7/8"	1 1/8
F18	5"	2 7/8"		7/8"	1 1/8
F19	5"	3"		7/8"	1 1/8
F20	6"	5"		1 1/8"	1 3/8
F21	6"	5 3/8"		1 1/8"	1 3/8

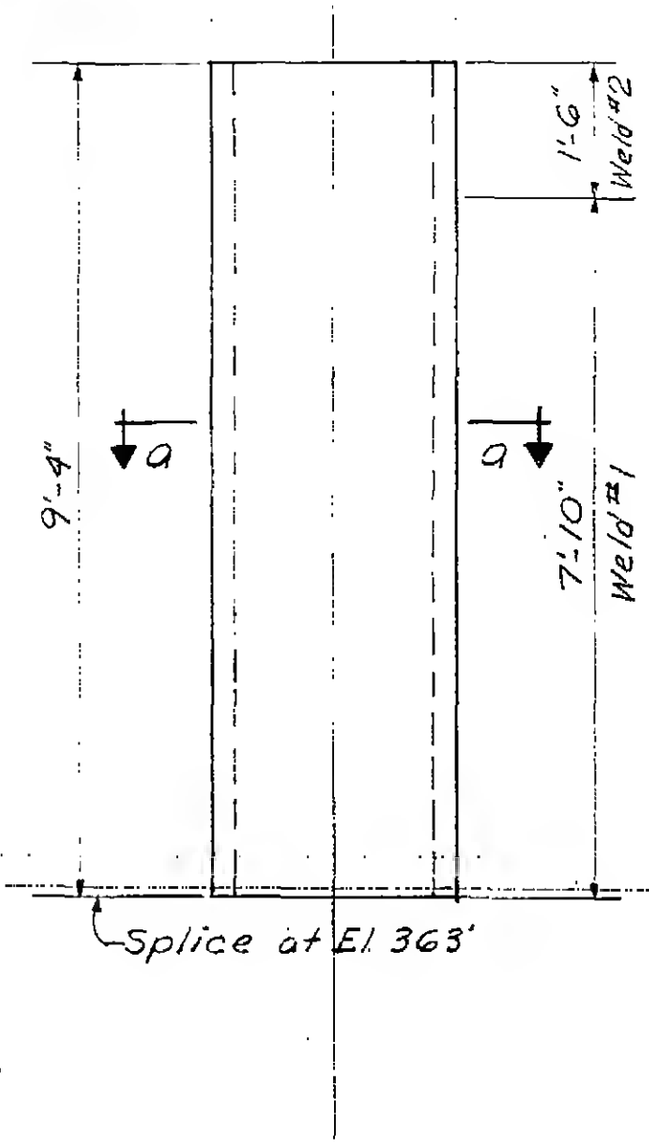

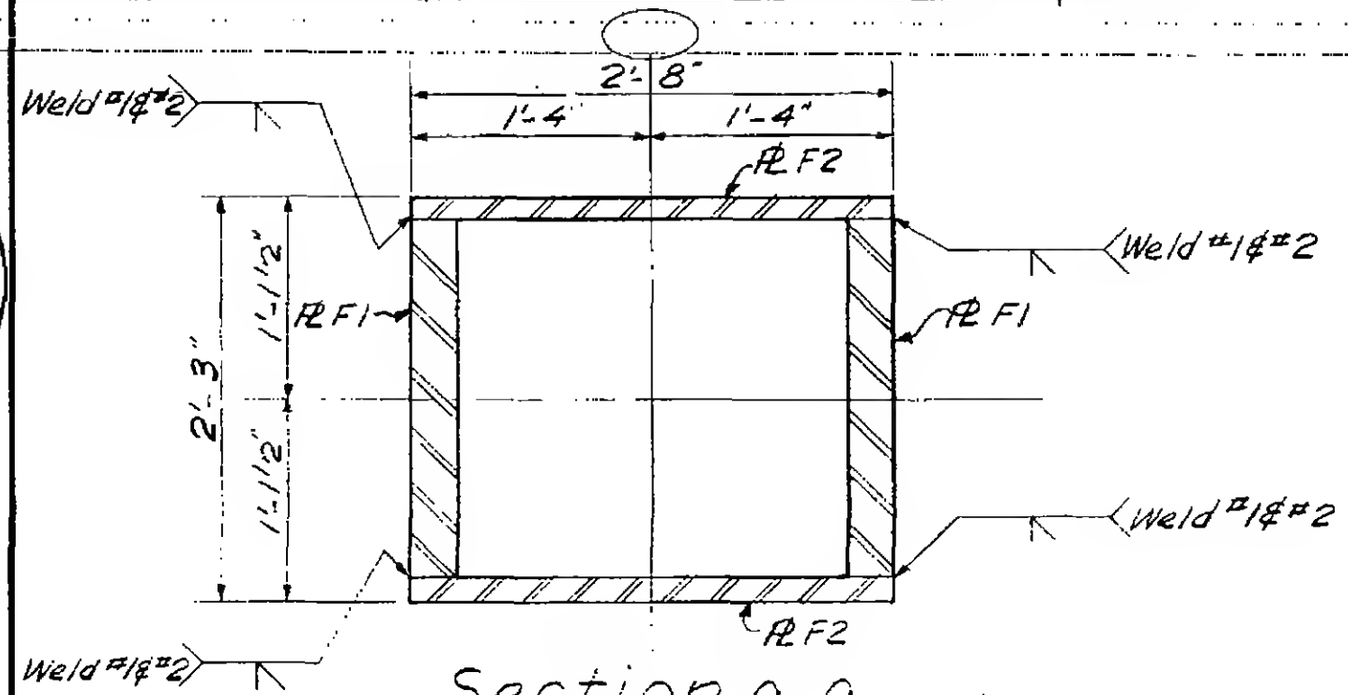

Section a-a

2-AB2-16

WORTHINGTON, SKILLING, HELLE & JACKSON — Civil & Structural Engineers

PROJECT: THE WORLD TRADE CENTER | TITLE: EXTERIOR WALL-TREE-CORNER PANEL ELEVATIONS | DATE: 4-7-67

REVISIONS

7-25-67

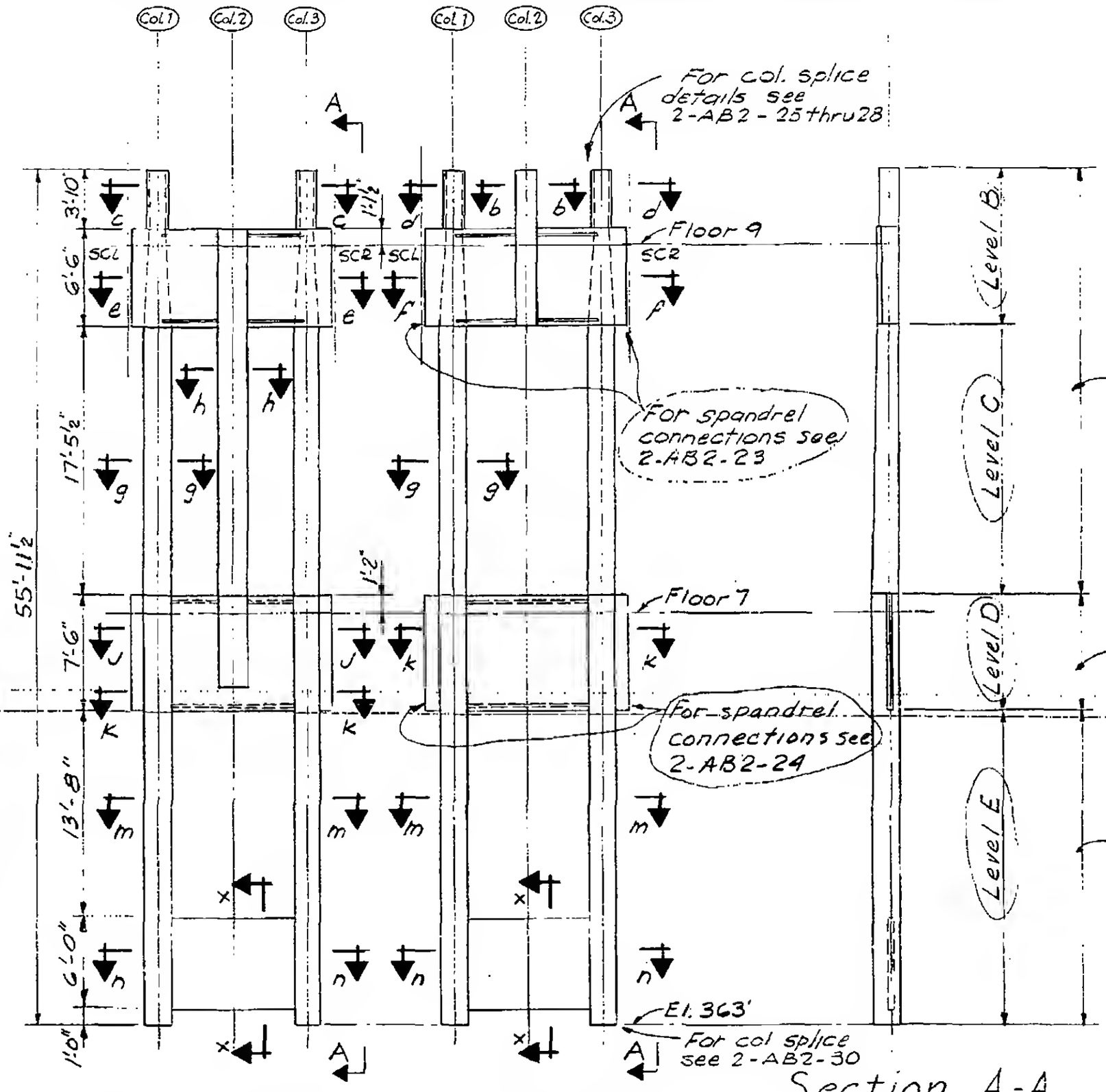

Section A-A

Panels 100A & 300A
100B & 300B

Panels 200A & 400A
200B & 400B

Note: See schedule 2-AB2-22

2-AB2-17

WORTHINGTON, SKILLING, HELLE & JACKSON — Civil & Structural Engineers

PROJECT: THE WORLD TRADE CENTER | TITLE: EXTERIOR WALL - TREE - CORNER PANEL SECTIONS | DATE: 4-7-67

REVISIONS
7-25-67
12-18-67

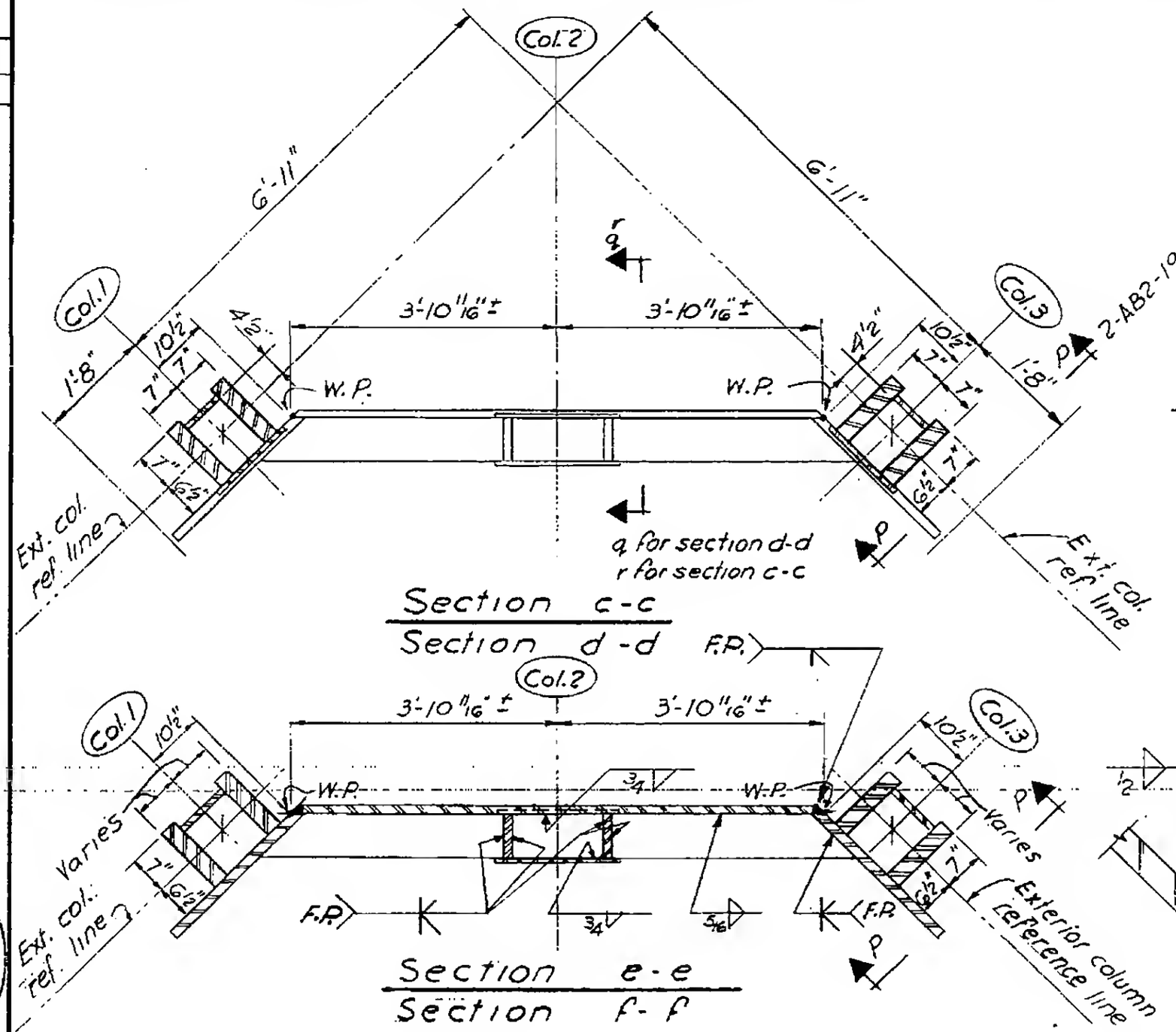

Section c-c

Section d-d

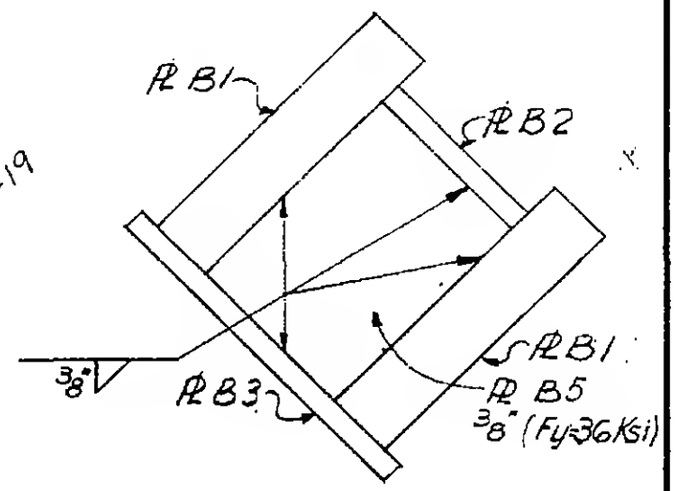

Section 1-1

Section e-e

Section f-f

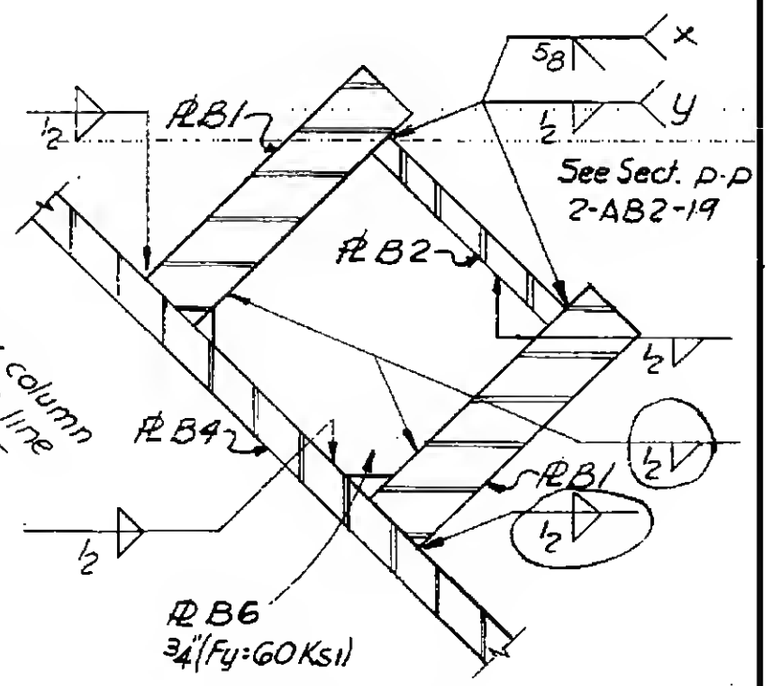

Section 2-2

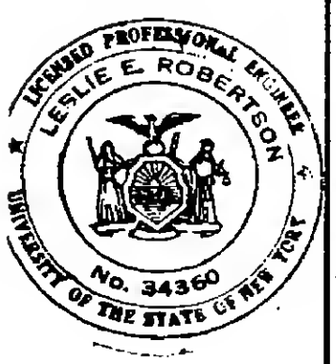

2-AB2-18

WORTHINGTON, SKILLING, HELLE & JACKSON — Civil & Structural Engineers

PROJECT: THE WORLD TRADE CENTER | TITLE: EXT. WALL-TREE-CORNER PANEL SECTIONS | DATE: 4-7-67

REVISIONS

7-25-67

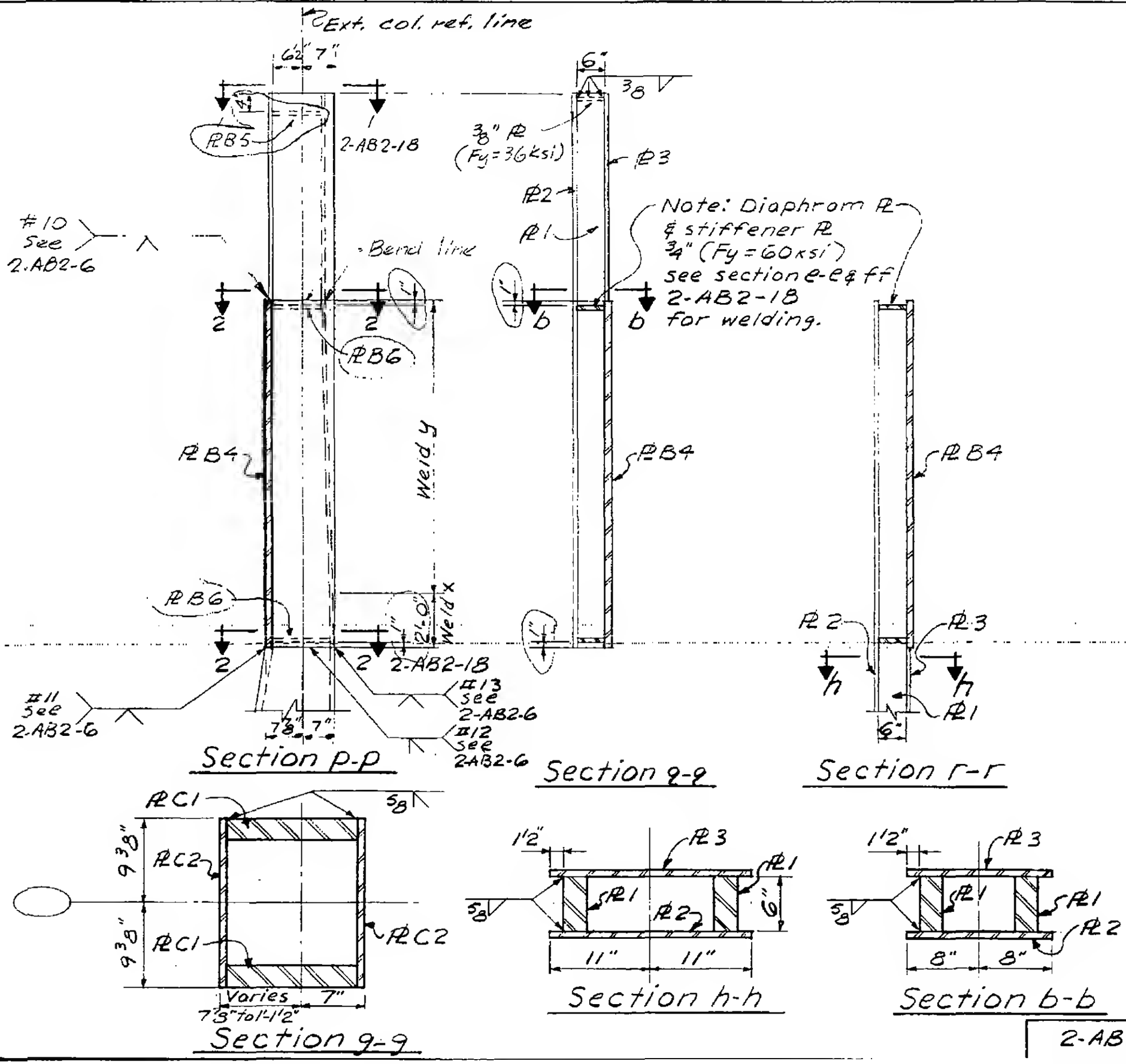

2-AB2-19

WORTHINGTON, SKILLING, HELLE & JACKSON — Civil & Structural Engineers

PROJECT: THE WORLD TRADE CENTER | TITLE: EXTERIOR WALL-TREE-CORNER PANEL SECTIONS | DATE: 4-7-67

REVISIONS

7-25-67

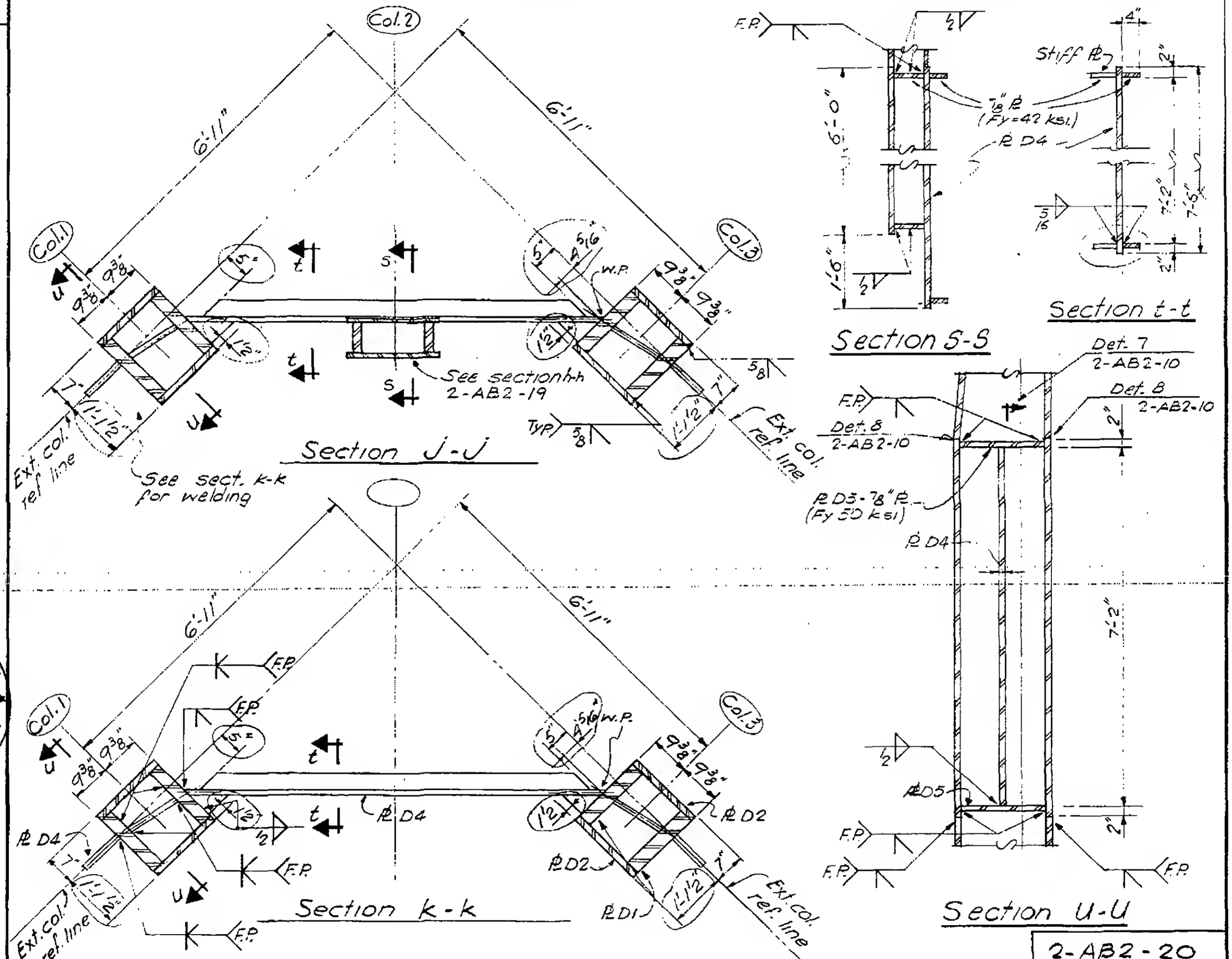

2-AB2-20

WORTHINGTON, SKILLING, HELLE & JACKSON — Civil & Structural Engineers

PROJECT: THE WORLD TRADE CENTER

TITLE: EXTERIOR WALL - TREE - CORNER PANEL SECTIONS

DATE: 4-7-67

REVISIONS

7-25-67

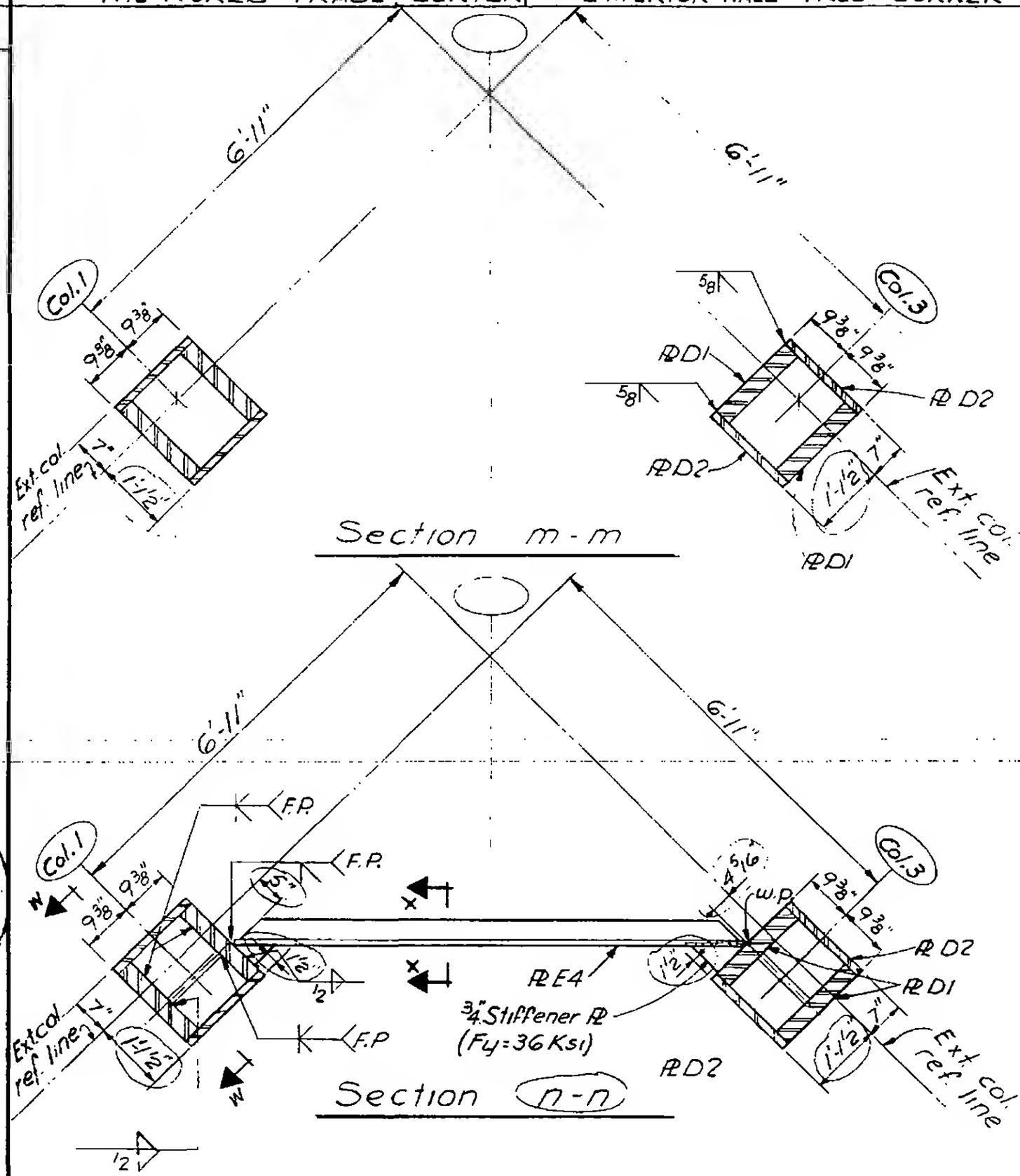

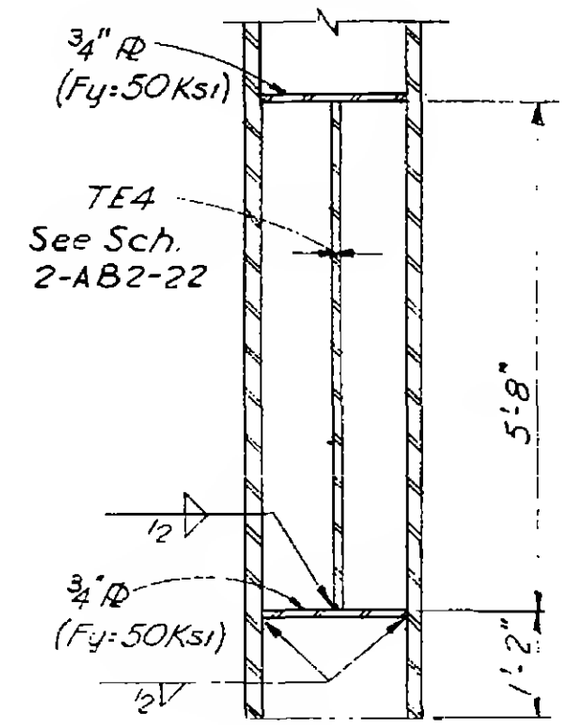

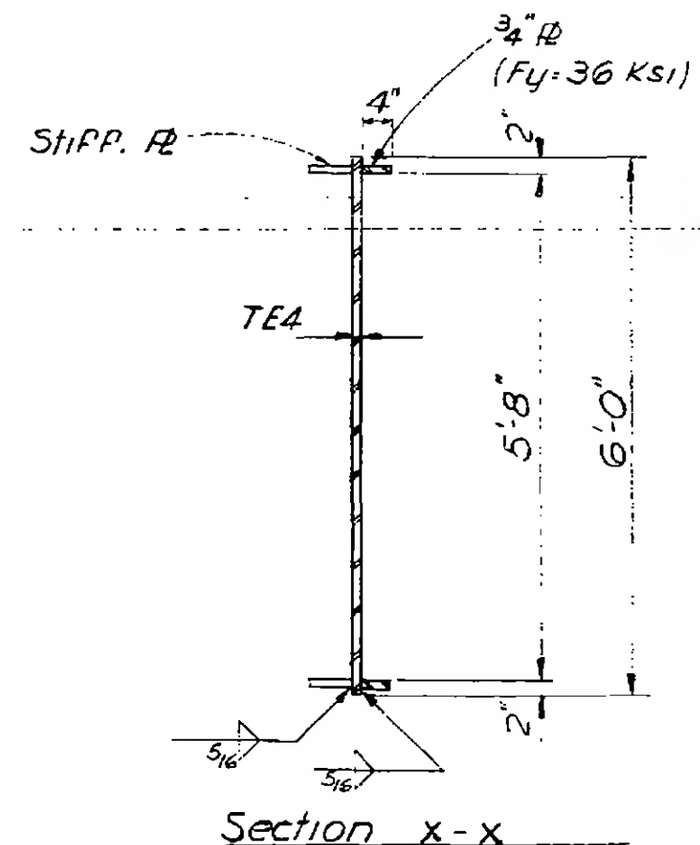

PANELS 100, 200, 300 & 400

2-AB2-21

LICENSED PROFESSIONAL ENGINEER — LESLIE E. ROBERTSON — No. 34360 — STATE OF NEW YORK

WORTHINGTON, SKILLING, HELLE & JACKSON — Civil & Structural Engineers

PROJECT: THE WORLD TRADE CENTER

TITLE: EXTERIOR WALL - TREE - CORNER PANEL SCH.

DATE: 4-7-67

REVISIONS: 7-25-67; 8-20-68

	COLUMN 1													COLUMN 2					COLUMN 3												UPPER SPLICE			LOWER SPLICE	
	PL B1	FY B1	PL B2	PL B3	FY B2&3	PL C1	FY C1	PL C2	FY C2	PL D1	FY D1	PL D2	FY D2	PL 1	FY 1	PL 2	PL 3	FY 2&3	PL B1	FY B1	PL B2	PL B3	FY B2&3	PL C1	FY C1	PL C2	FY C2	PL D1	FY D1	PL D2	FY D2	COL 1	COL 2	COL 3	COL 1	COL 3
100A	2 3/16	60	11/16	11/16	60	2 3/16	60	11/16	60	1 7/16	65	5/8	65	2 1/2	60	3/4	3/4	60	2 1/2	60	3/4	3/4	60	2 1/2	60	3/4	60	1 3/4	60	5/8	60	102	-	103	501	501
200A	2 1/2	60	3/4	3/4	60	2 1/2	60	3/4	60	1 3/4	60	5/8	60	2 1/2	60	3/4	3/4	60	2 3/16	60	11/16	11/16	60	2 3/16	60	11/16	60	1 7/16	65	5/8	65	103	41	102	501	501
300A	2 3/16	60	11/16	11/16	60	2 3/16	60	11/16	60	1 7/16	75	5/8	75	2 1/2	60	3/4	3/4	60	2 1/2	60	3/4	3/4	60	2 1/2	60	3/4	60	1 3/4	55	5/8	55	102	-	103	501	501
400A	2 1/2	60	3/4	3/4	60	2 1/2	60	3/4	60	1 3/4	55	5/8	55	2 1/2	60	3/4	3/4	60	2 3/16	60	11/16	11/16	60	2 3/16	60	11/16	60	1 7/16	70	5/8	70	103	41	102	501	501
100B	2 3/16	60	11/16	11/16	60	2 3/16	60	11/16	60	1 7/16	70	5/8	70	2 1/2	60	3/4	3/4	60	2 1/2	60	3/4	3/4	60	2 1/2	60	3/4	60	1 3/4	70	5/8	70	102	-	103	501	501
200B	2 1/2	60	3/4	3/4	60	2 1/2	60	3/4	60	1 3/4	70	5/8	70	2 1/2	65	3/4	3/4	65	2 3/16	65	11/16	11/16	65	2 3/16	65	11/16	65	1 7/16	65	5/8	65	103	41	102	501	501
300B	2 3/16	65	11/16	11/16	65	2 3/16	65	11/16	65	1 7/16	65	5/8	65	2 1/2	65	3/4	3/4	65	2 1/2	65	3/4	3/4	65	2 1/2	65	3/4	65	1 3/4	70	5/8	70	102	-	103	501	501
400B	2 1/2	60	3/4	3/4	60	2 1/2	60	3/4	60	1 3/4	65	5/8	65	2 1/2	65	3/4	3/4	65	2 3/16	65	11/16	11/16	65	2 3/16	65	11/16	65	1 7/16	75	5/8	75	103	41	102	501	501

	SPANDREL LEVEL B							SPANDREL LEVEL D							SPANDREL LEVEL E		
	TB4	FY B4	SCL	SCR	SEAT DETAILS Col. 1	Col. 2	Col. 3	TD4	FY D4	SCL	SCR	SEAT DETAILS Col. 1	Col. 2	Col. 3	TE4	FY E4	
100A	1 3/8	36	B13	B13	97	99	97	1 1/2	42	D12	D13	76	99	76	3/4	50	
200A	1 3/8	36	B13	B13	97	99	97	1 1/2	42	D13	D13	76	-	76	3/4	50	
300A	1 3/8	36	B13	B13	97	99	97	1 1/2	42	D12	D13	76	99	76	3/4	50	
400A	1 3/8	36	B13	B13	97	99	97	1 1/2	42	D13	D12	76	-	76	3/4	50	
100B	1 3/8	36	B13	B13	97	99	97	1 1/2	42	D13	D13	76	99	76	3/4	50	
200B	1 3/8	36	B13	B13	89	87	89	1 1/2	42	D14	D14	76	-	76	3/4	50	
300B	1 3/8	36	B13	B13	89	87	89	1 1/2	42	D13	D13	76	99	76	3/4	50	
400B	1 3/8	36	B13	B13	97	99	97	1 1/2	42	D13	D13	76	-	76	3/4	50	

LICENSED PROFESSIONAL ENGINEER LESLIE E. ROBERTSON No. 34360 UNIVERSITY OF THE STATE OF NEW YORK

2-AB2-22

WORTHINGTON, SKILLING, HELLE & JACKSON — Civil & Structural Engineers

PROJECT: THE WORLD TRADE CENTER | TITLE: EXTERIOR WALL - TREE - SPANDREL SPLICE B | DATE: 4-7-67

REVISIONS

1-2-68

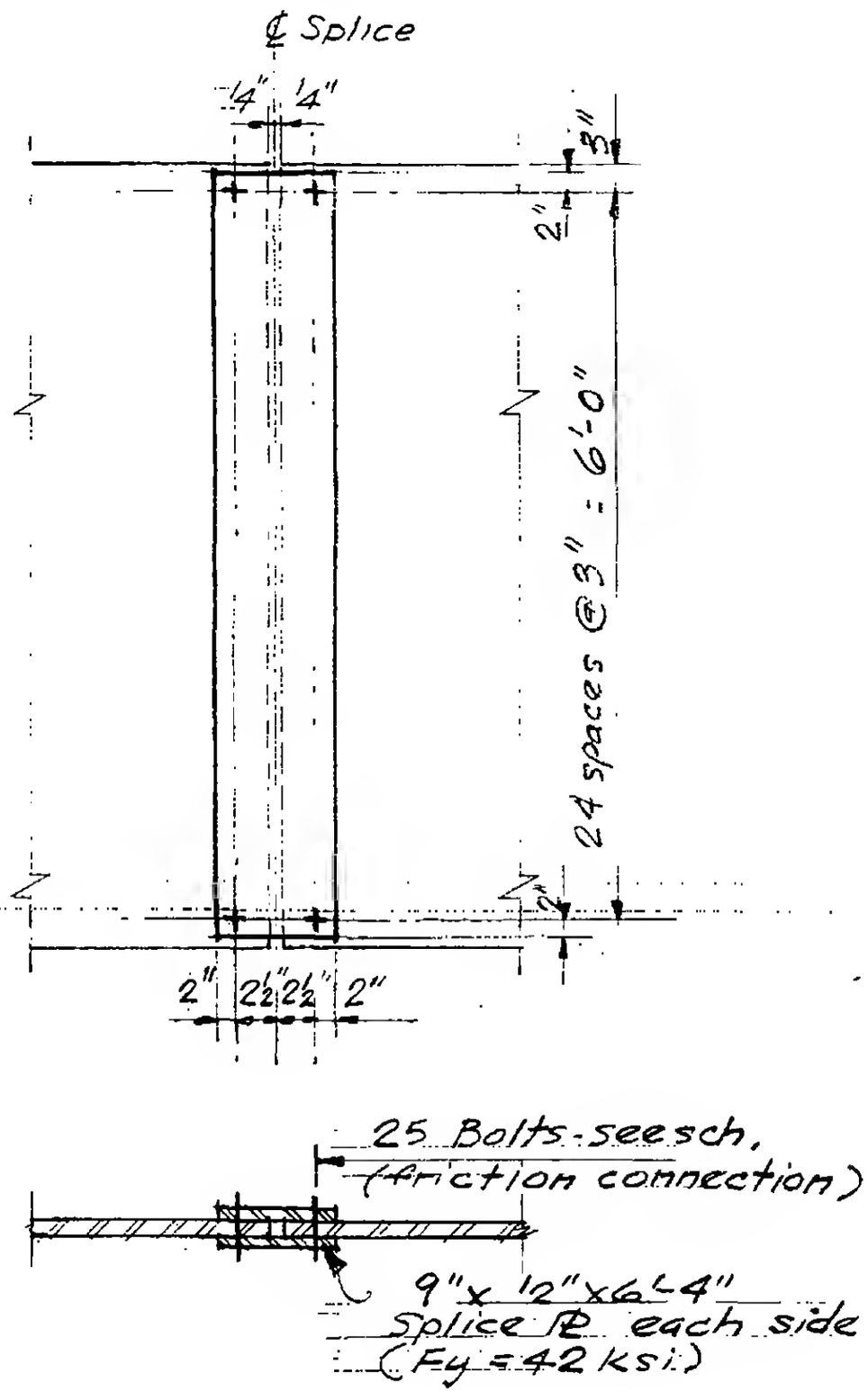

SPLICE DETAIL	BOLTS
B11	25-⅞"φ A325
B12	25-1"φ A325
B13	25-1⅛"φ A325

NOTE

1. Bolts shall be H.S. bolts - grade as shedule, with heads placed on the outside face of the spandrel. Holes in spandrel PL to be 3/16" larger in diameter than the schedule bolt. Holes in splice PL 1/16" larger than the schedule bolt.

2-AB2-23

WORTHINGTON, SKILLING, HELLE & JACKSON — Civil & Structural Engineers

PROJECT: THE WORLD TRADE CENTER | TITLE: EXTERIOR WALL-TREE-SPANDREL SPLICE D | DATE: 4-7-67

REVISIONS

12-18-67

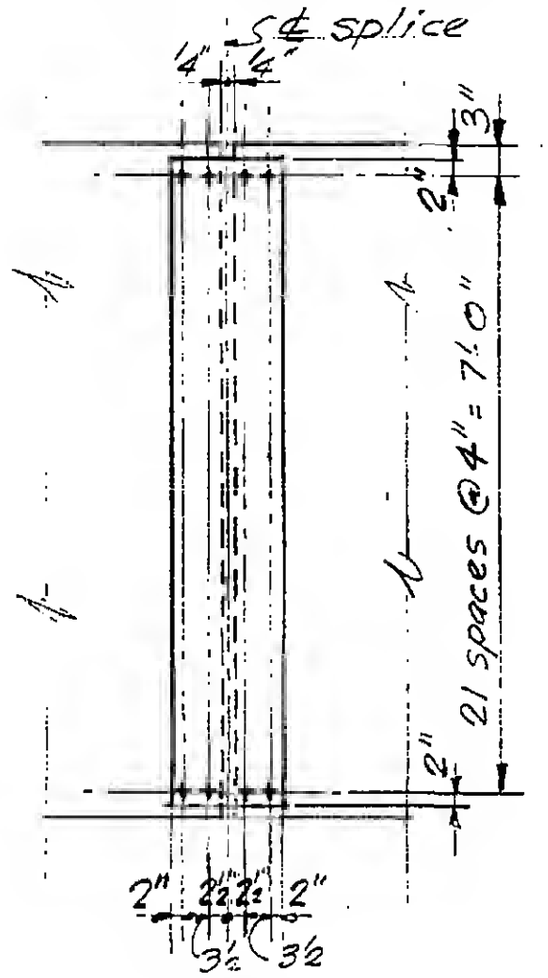

SPLICE DETAIL	BOLTS	t
D11	44 - 1"ϕ A325	1/2"
D12	44 - 1 1/8"ϕ A325	1/2"
D13	44 - 1 1/8"ϕ A490	5/8"
D14	44 - 1 1/4"ϕ A490	3/4"

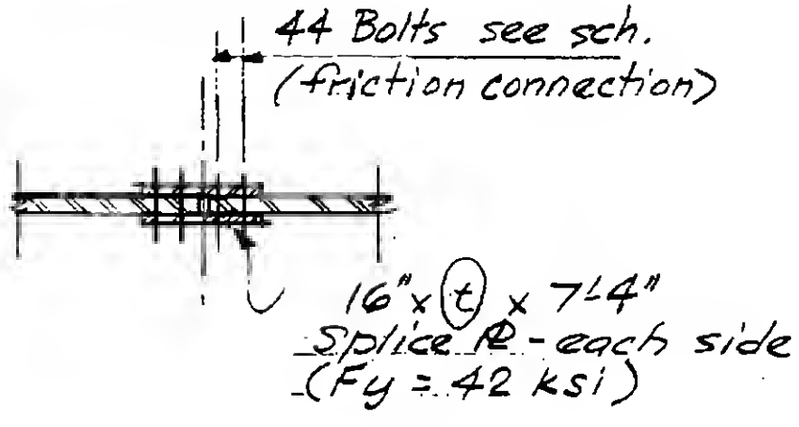

See Note 1, 2-AB2-23

LICENSED PROFESSIONAL ENGINEER
LESLIE E. ROBERTSON
No. 34360
UNIVERSITY OF THE STATE OF NEW YORK

2-AB2-24

WORTHINGTON, SKILLING, HELLE & JACKSON — Civil & Structural Engineers

PROJECT: THE WORLD TRADE CENTER | TITLE: EXTERIOR WALL-TREE-COLUMN SPLICE 102 & 103 | DATE: 4-7-67

REVISIONS
7-28-67
12-18-67

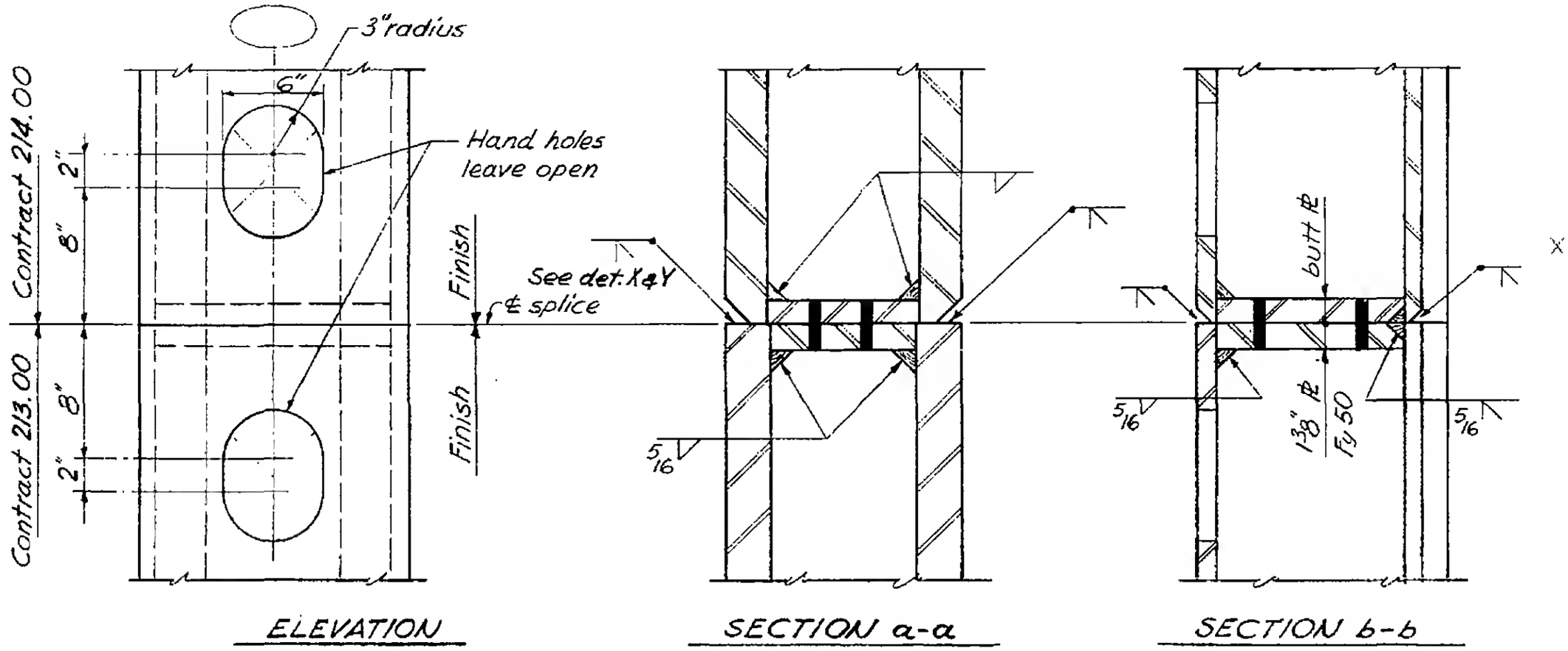

ELEVATION — SECTION a-a — SECTION b-b

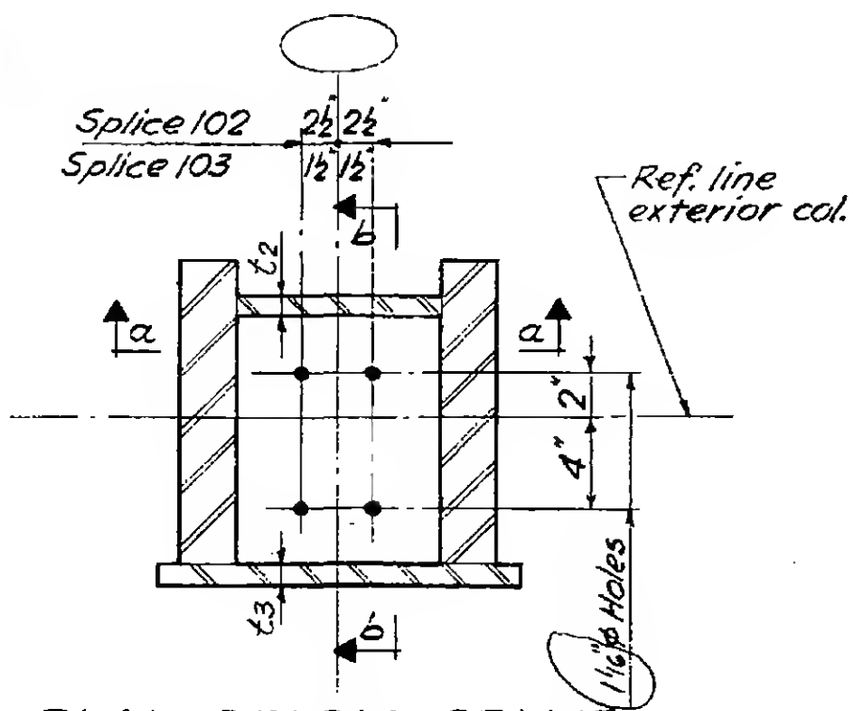

PLAN BELOW SPLICE

2-AB2-25

WORTHINGTON, SKILLING, HELLE & JACKSON — Civil & Structural Engineers

PROJECT: THE WORLD TRADE CENTER | TITLE: EXTERIOR WALL - TREE - COLUMN SPLICE DETAIL 41 | DATE: 4-7-67

REVISIONS

7-28-67

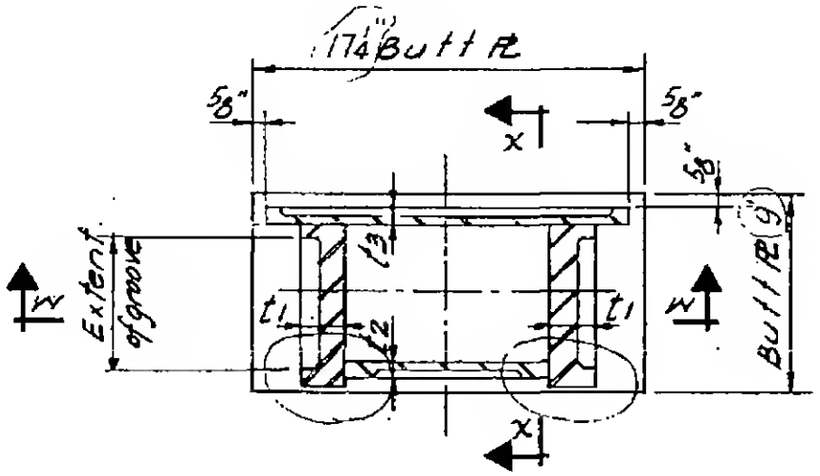

PLAN ABOVE SPLICE

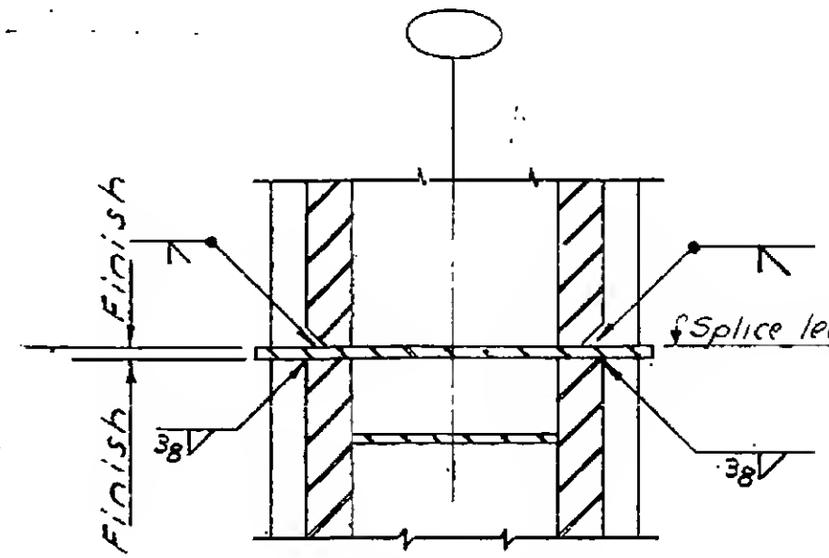

SECTION W-W

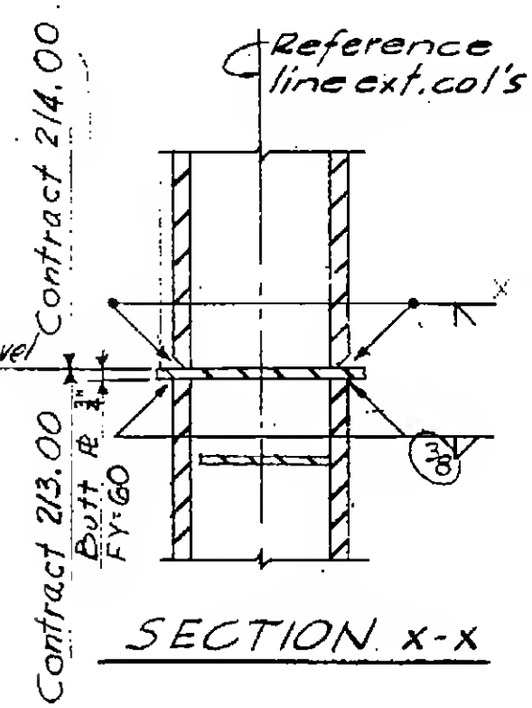

SECTION X-X

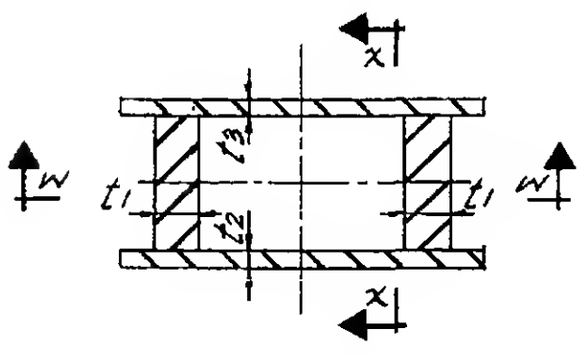

PLAN BELOW SPLICE

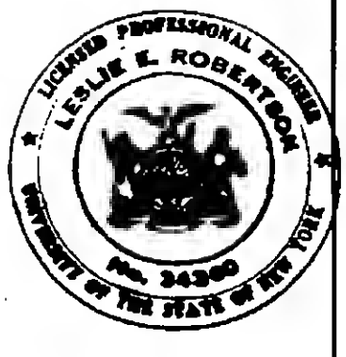

2-AB2-28

WORTHINGTON, SKILLING, HELLE & JACKSON — Civil & Structural Engineers

PROJECT: THE WORLD TRADE CENTER | TITLE: EXTERIOR WALL - TREE - COL. SPLICE DETS. 700 | DATE: 4-7-67

REVISIONS

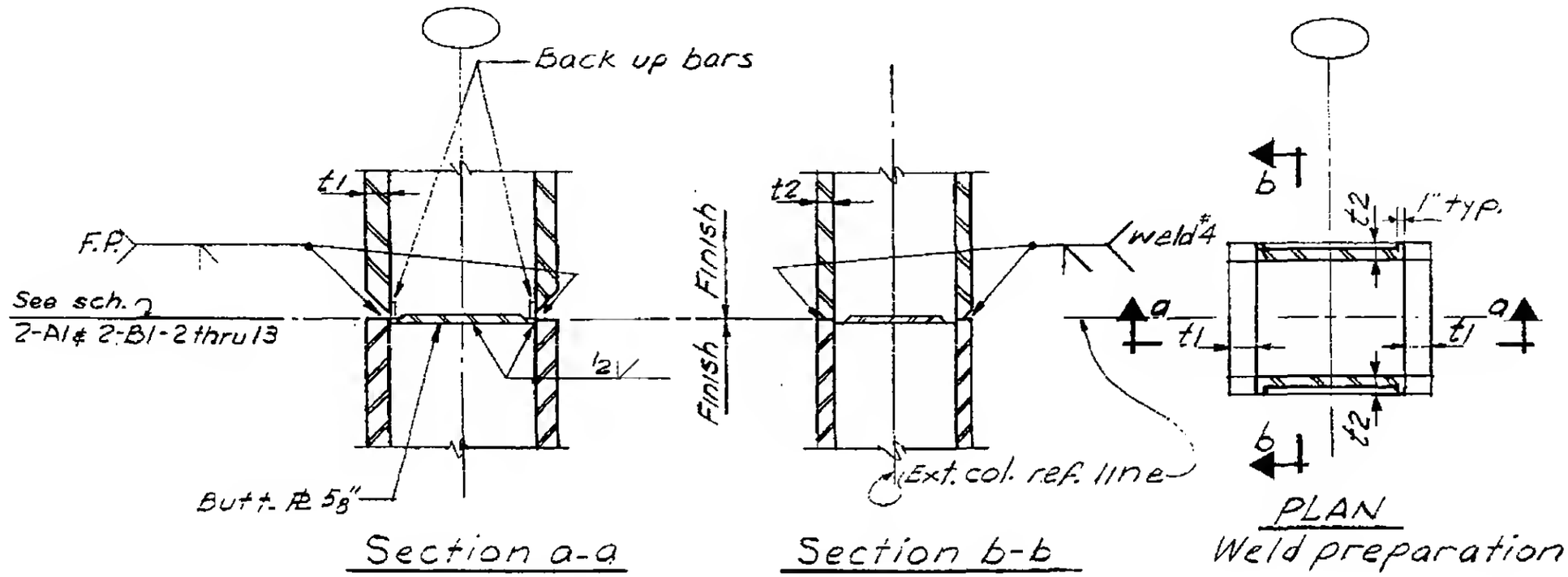

Splice detail	Weld #4
701	3/4
702	1
703	1 1/8
704	1 1/4
705	1 1/2

2-AB2-29

WORTHINGTON, SKILLING, HELLE & JACKSON — Civil & Structural Engineers

PROJECT: THE WORLD TRADE CENTER | TITLE: EXTERIOR WALL - TREE - COL. SPLICE DET. 501 | DATE: 4-7-67

REVISIONS

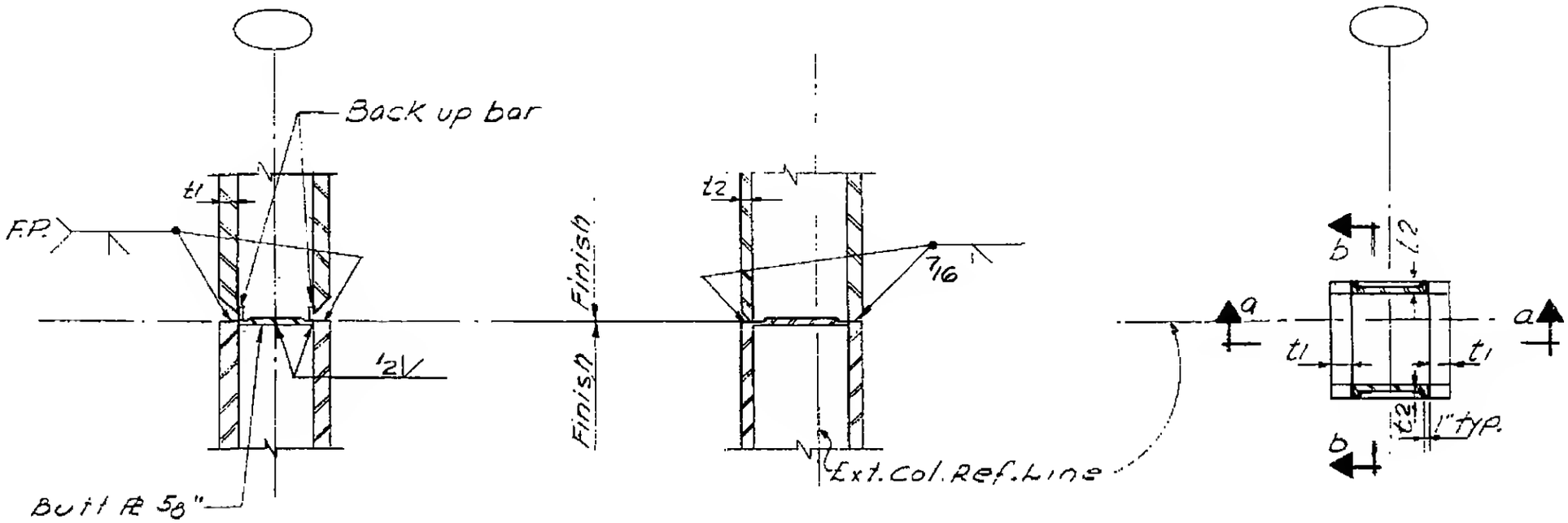

Section a-a

Section b-b

PLAN
Weld-preparation

2-AB2-30

WORTHINGTON, SKILLING, HELLE & JACKSON — Civil & Structural Engineers

PROJECT: THE WORLD TRADE CENTER | TITLE: EXTERIOR WALL - TREE - SEAT DETAILS 70 - 73 | DATE: 7-25-67

REVISIONS: 12-18-67

Det. No	Plate A	B	C	D	E
70	12 × 1	19½	22¾	2¾	½
71	11 × ⅞	17	22¾	2¾	⅜
72	9 × ⅝	12	24¼	1¾	5/16
73	8 × ½	8	24¼	1¾	5/16
72A	9 × ⅝	12	24¼	2¾	5/16

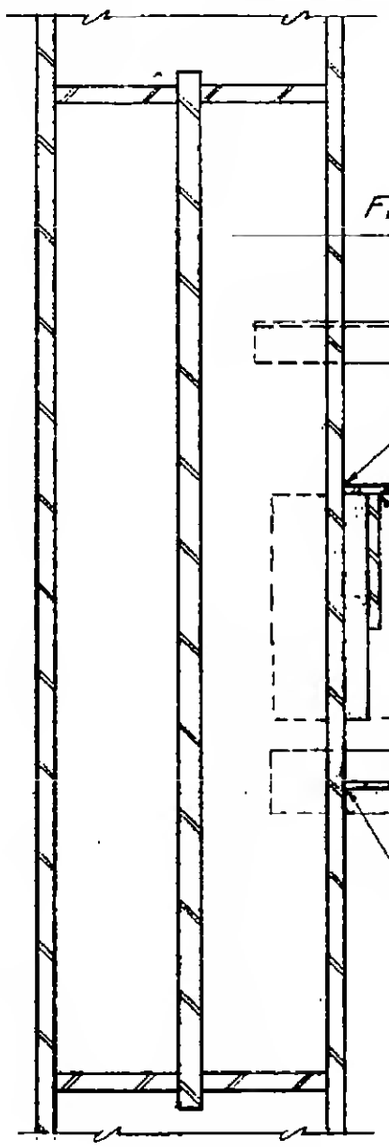

SECTION a-a

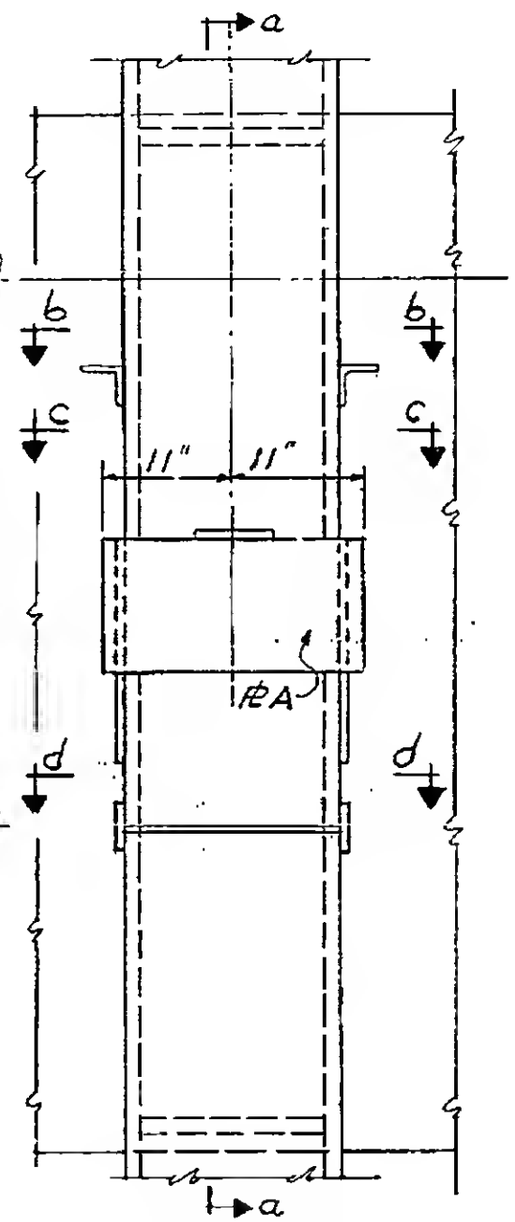

ELEVATION

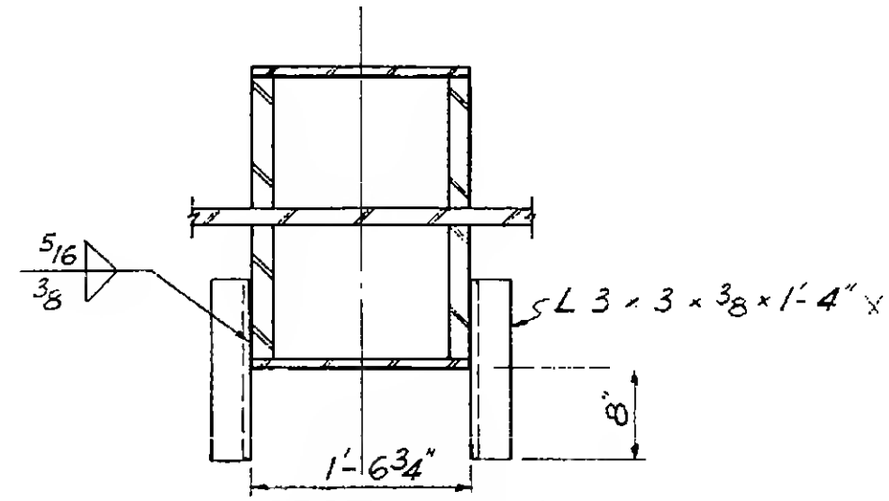

SECTION b-b

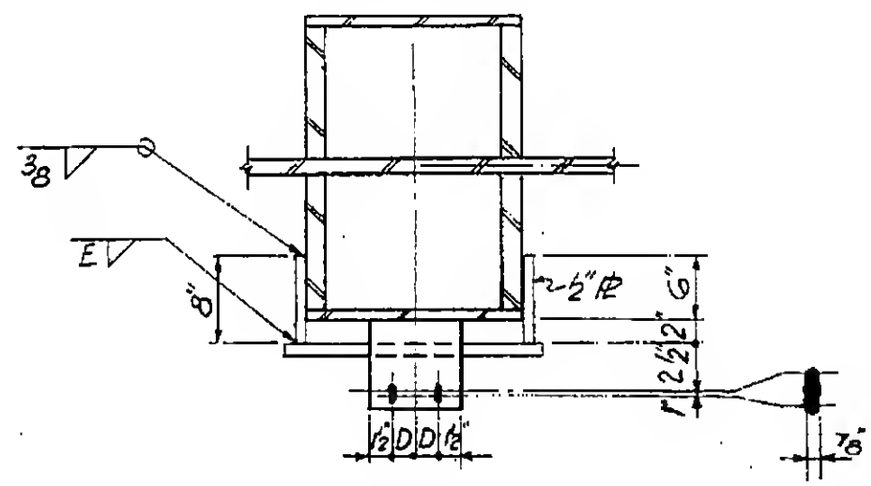

SECTION c-c

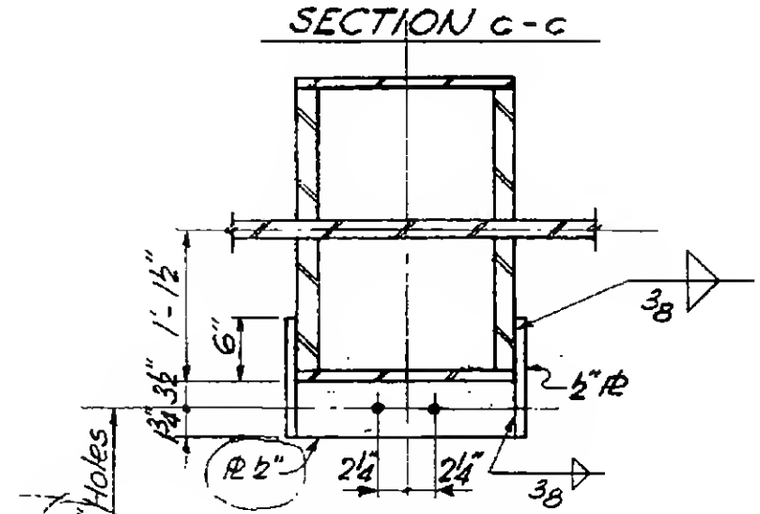

SECTION d-d

1. See 2-A1 and 2-B1-2 thru -13 for schedule
2. Grind weld #1 (2-AB2-8) flush in area of detail material welded along side column
3. Thickness of PL same as PL A

LICENSED PROFESSIONAL ENGINEER — LESLIE E. ROBERTSON — No. 34360 — UNIVERSITY OF THE STATE OF NEW YORK

2-AB2-31

WORTHINGTON, SKILLING, HELLE & JACKSON — Civil & Structural Engineers

PROJECT: THE WORLD TRADE CENTER | TITLE: EXTERIOR WALL - TREE - SEAT DETAILS 74 & 75 | DATE: 7-25-67

REVISIONS

12-18-67

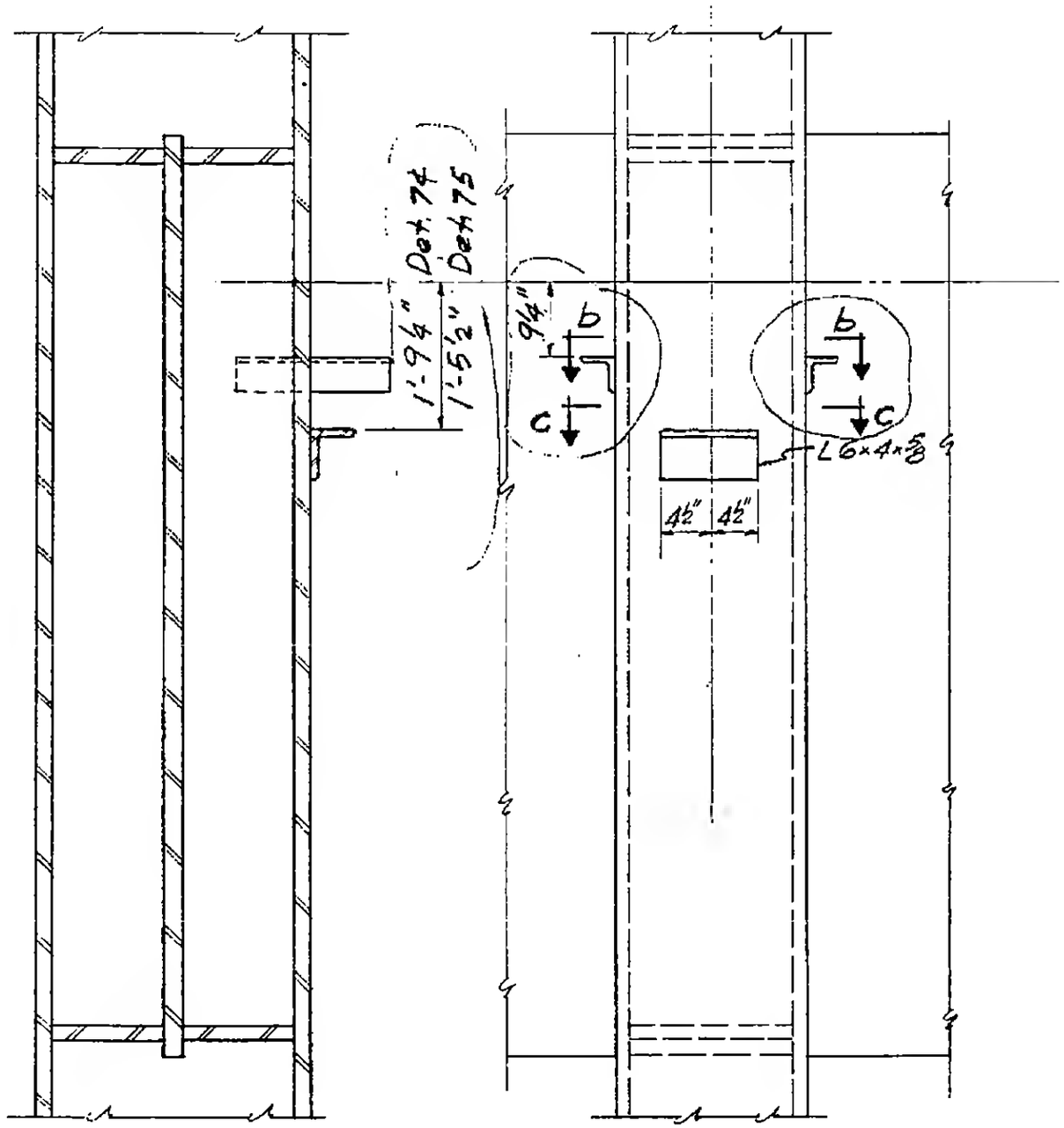

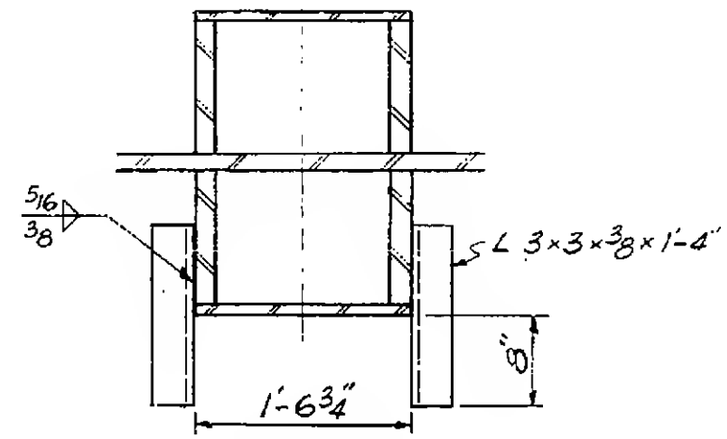

SECTION b-b

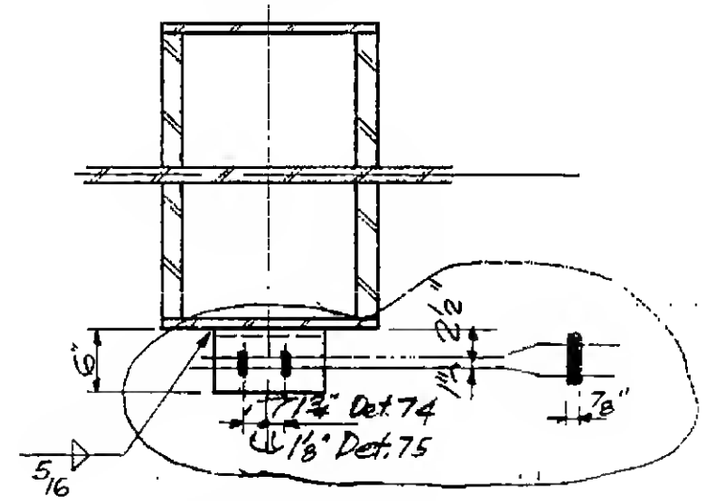

SECTION c-c

2-AB2-32

WORTHINGTON, SKILLING, HELLE & JACKSON — Civil & Structural Engineers

PROJECT: THE WORLD TRADE CENTER | TITLE: EXTERIOR WALL - TREE - SEAT DETAIL 76 | DATE: 7-25-67

REVISIONS

12-18-67

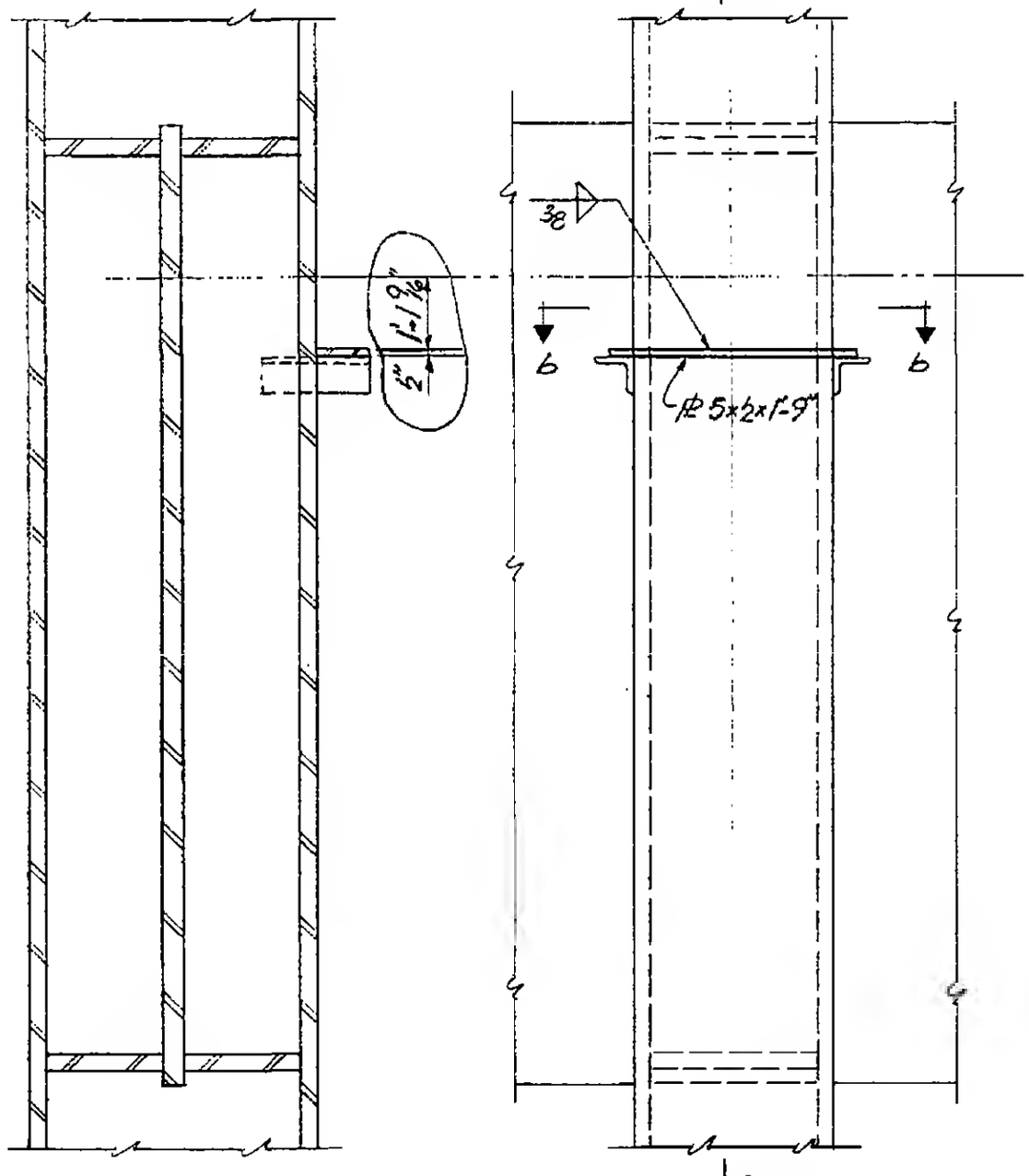

SECTION a-a

ELEVATION

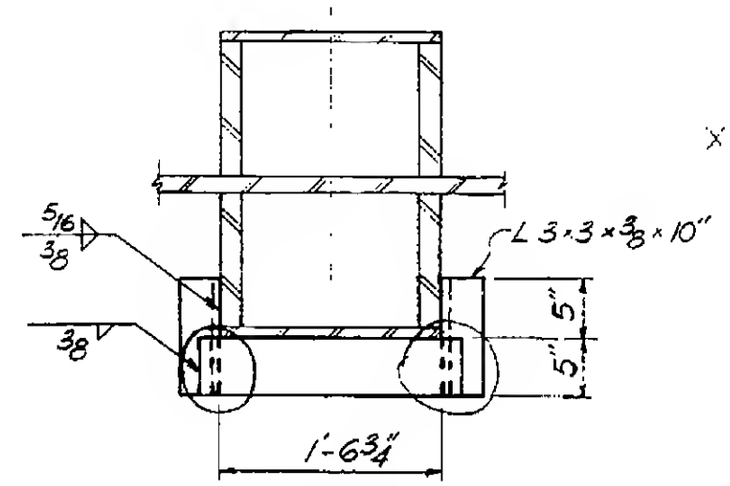

SECTION b-b

2-AB2-33

WORTHINGTON, SKILLING, HELLE & JACKSON — Civil & Structural Engineers

PROJECT: THE WORLD TRADE CENTER | TITLE: EXTERIOR WALL-TREE-SEAT DETAILS 90-93, 85 | DATE: 7-25-67

REVISIONS
12-18-67
8-20-68

① See 2-A1 and 2-B1-2 thru-13 for schedule
② Thickness of PL same as PL A
③ These surfaces to line up using theoretical column width
④ Stiffener plate at option of contractor

Det	Plate A	B	C	D
90	12 × 1	20	22¾	2¾
91	11 × ⅞	17	22¾	2¾
92	9 × ⅝	12	26¼	1¾
93	8 × ½	8	23¾	1¾
85	14 × 1	20	22¾	2¾

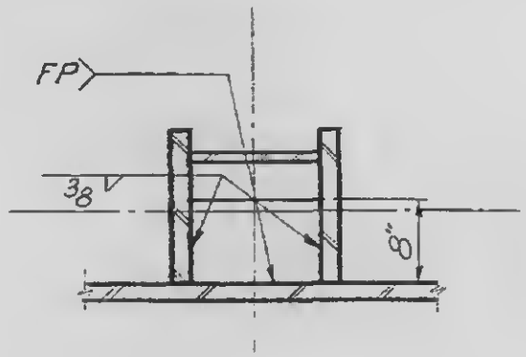

SECTION 6-6

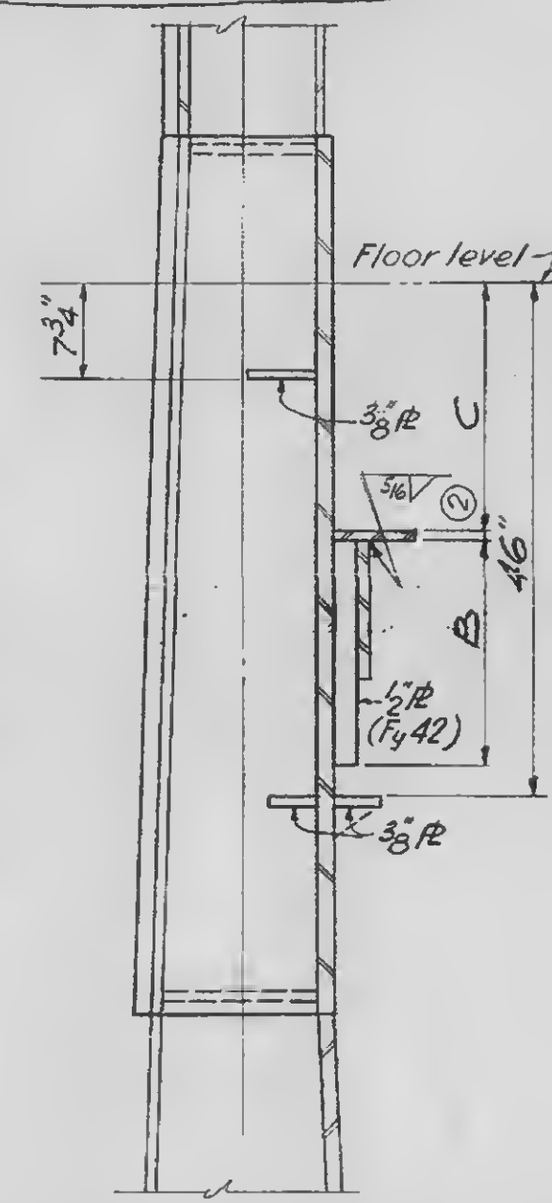

SECTION a-a

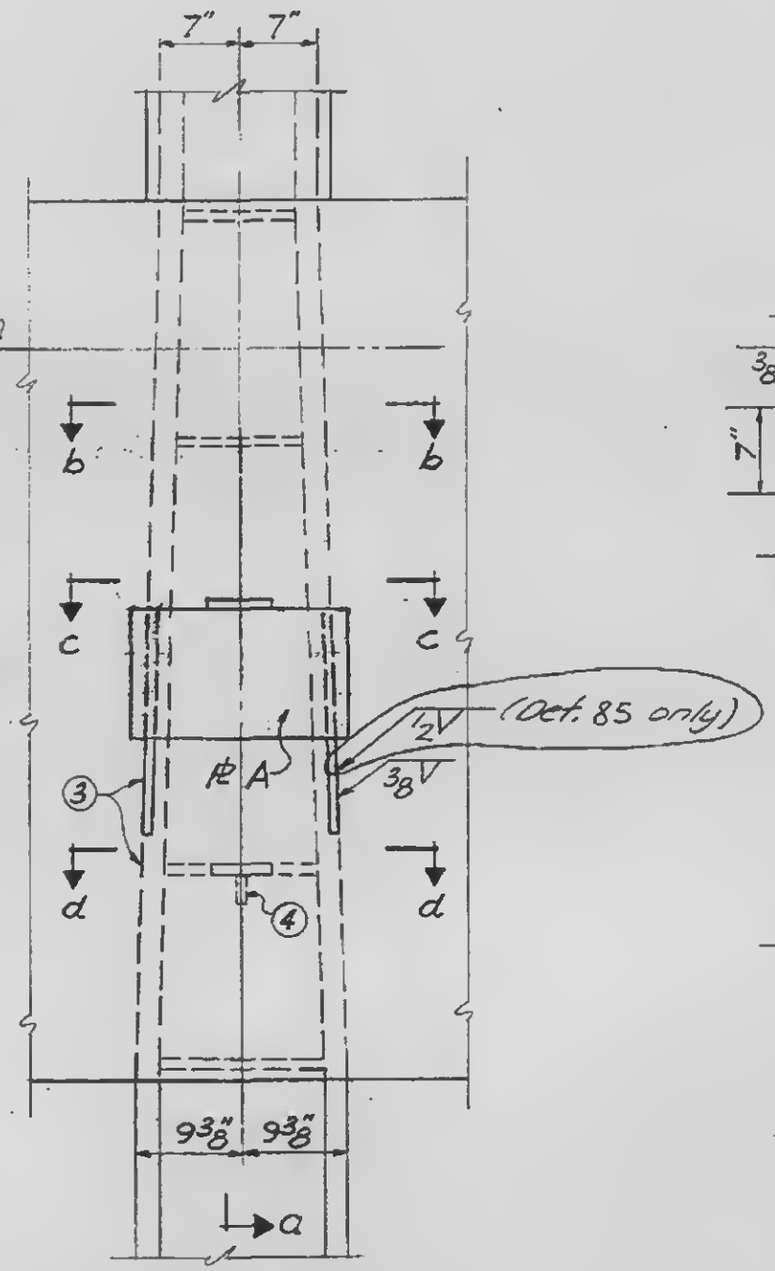

ELEVATION

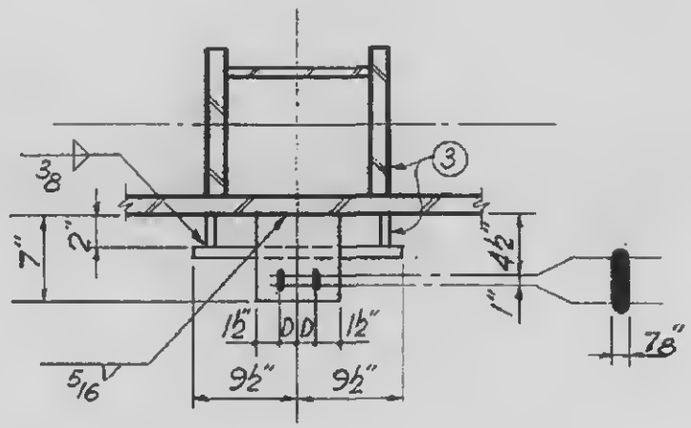

SECTION c-c

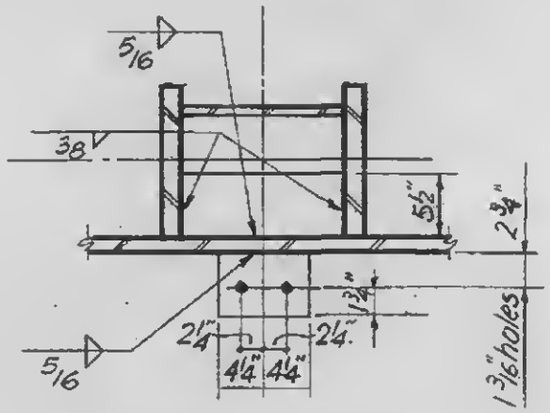

SECTION d-d

LICENSED PROFESSIONAL ENGINEER
LESLIE E. ROBERTSON
No. 34360
UNIVERSITY OF THE STATE OF NEW YORK

2-AB2-34

WORTHINGTON, SKILLING, HELLE & JACKSON — Civil & Structural Engineers

PROJECT: THE WORLD TRADE CENTER | TITLE: EXTERIOR WALL - TREE - SEAT DETAILS 86-89, 94, 95 | DATE: 7-25-67

REVISIONS
12-18-67
8-20-68

Det. No	A	B
94	21¾	1¾
95	21¾	1¾
89	15¾	–
88	17¼	–
87	15¾	–
86	20¼	1¾

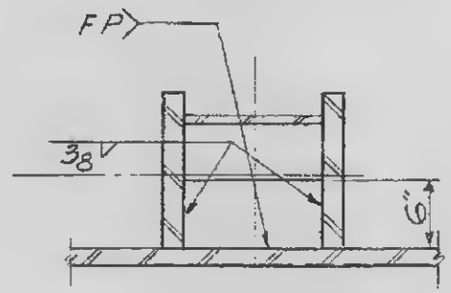

SECTION b-b

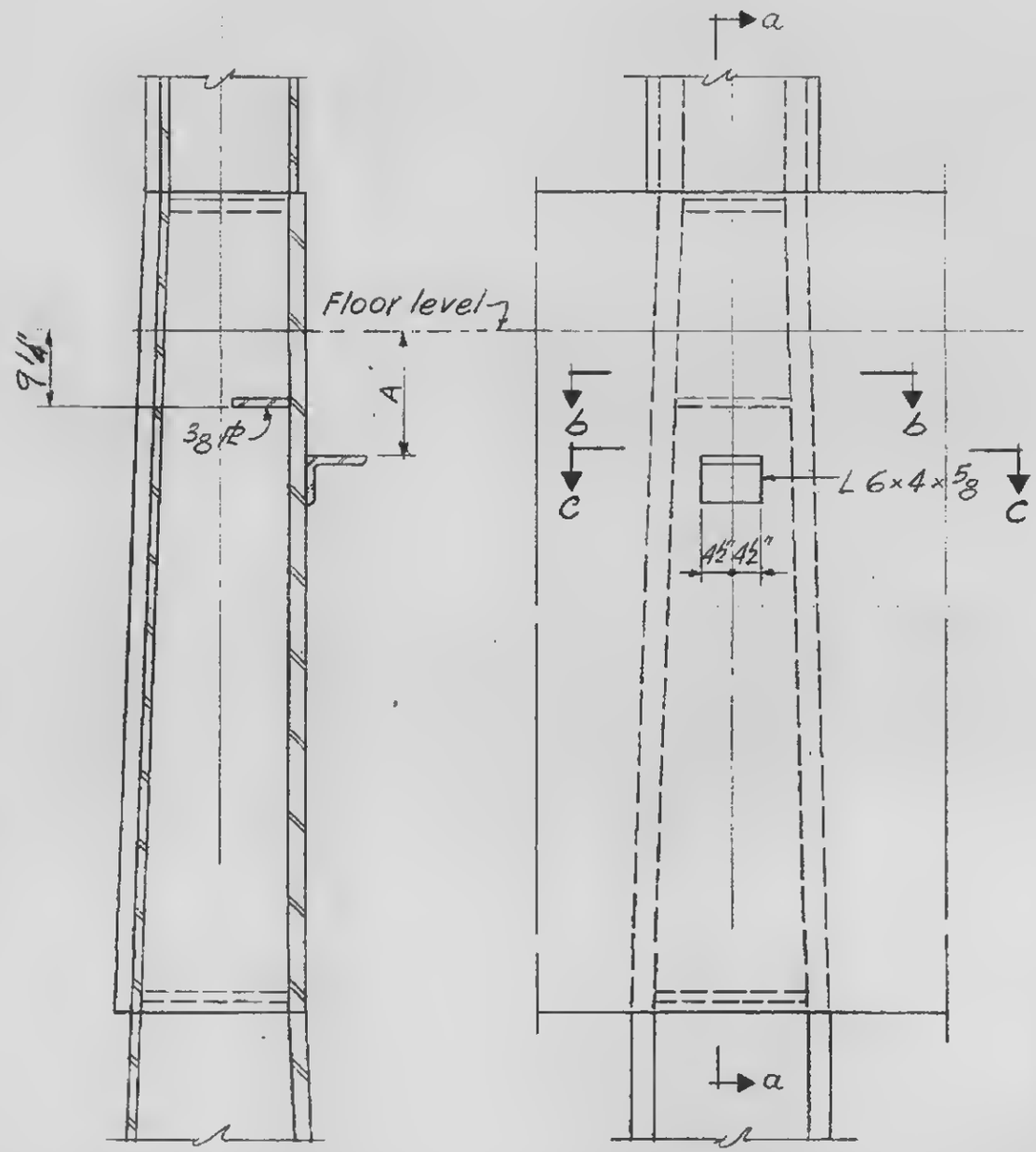

SECTION a-a

ELEVATION

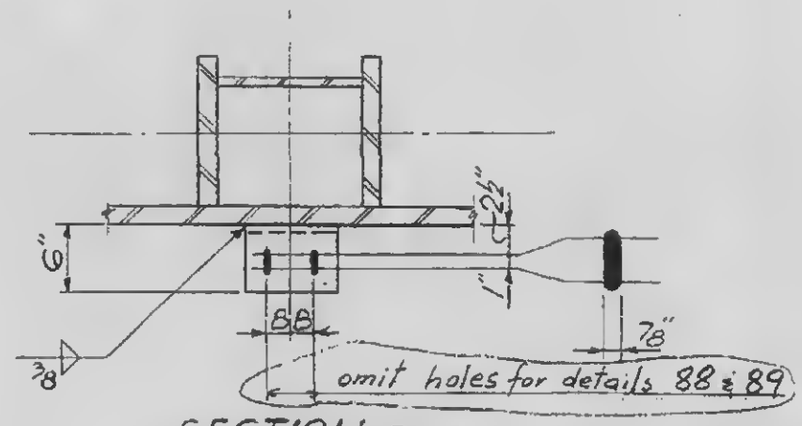

SECTION c-c

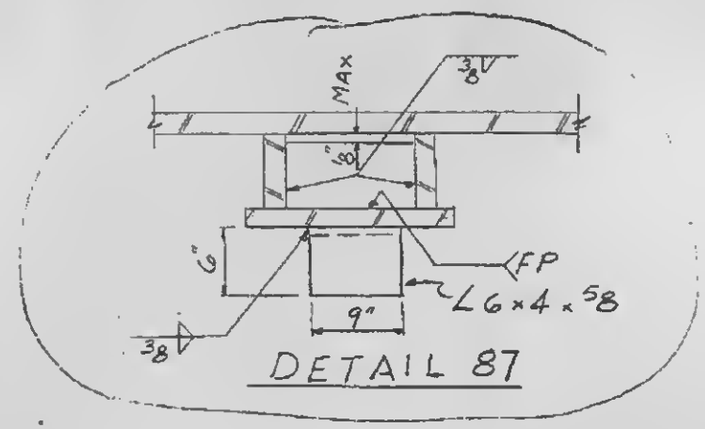

DETAIL 87

LICENSED PROFESSIONAL ENGINEER
LESLIE E. ROBERTSON
No. 34360
UNIVERSITY OF THE STATE OF NEW YORK

2-AB2-35

WORTHINGTON, SKILLING, HELLE & JACKSON — Civil & Structural Engineers

PROJECT: THE WORLD TRADE CENTER | TITLE: EXTERIOR WALL - TREE - SEAT DETAILS 96 - 99 | DATE: 7-25-67

REVISIONS
12-18-67
8-20-68
10-16-68

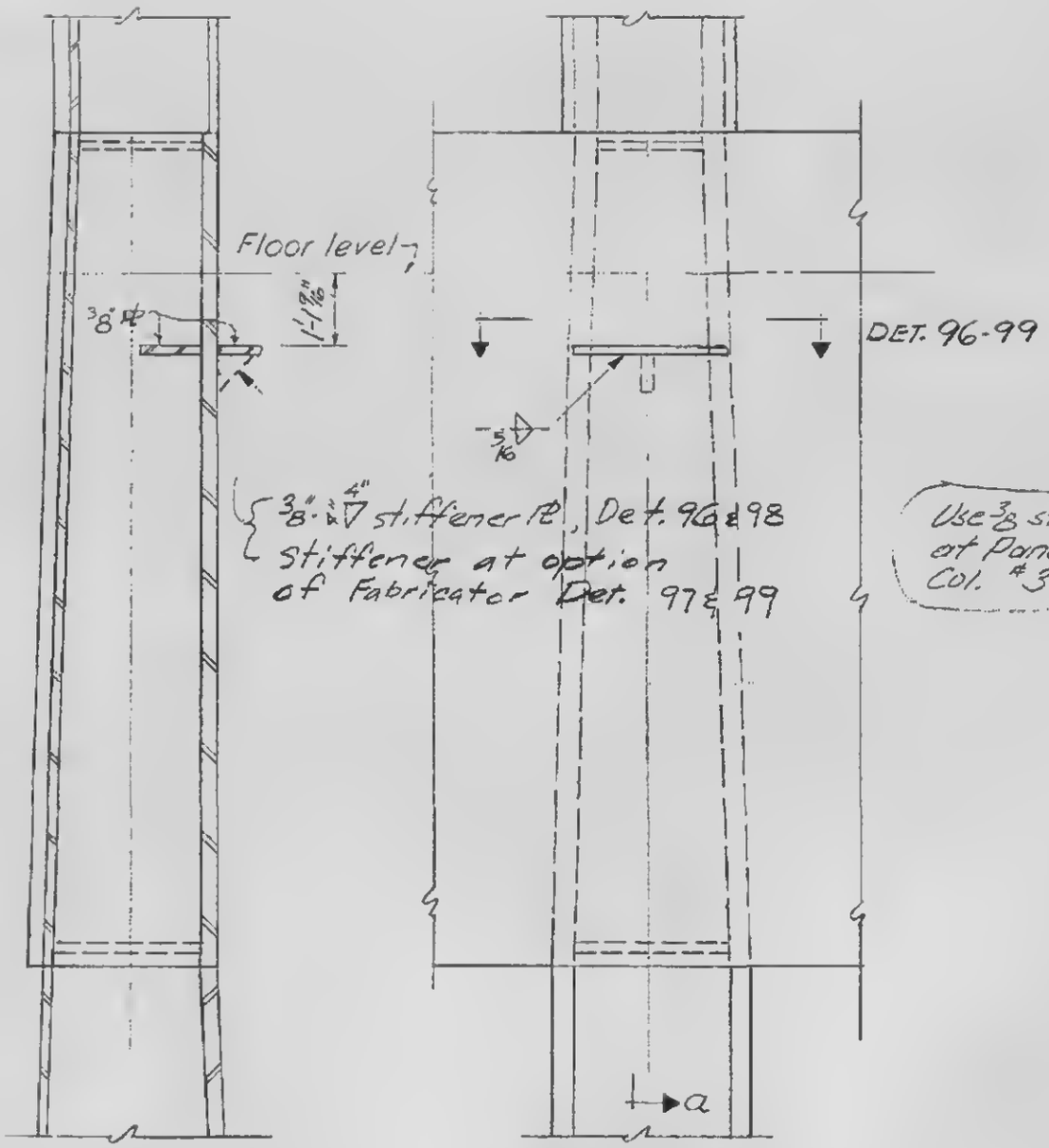

SECTION a-a

ELEVATION

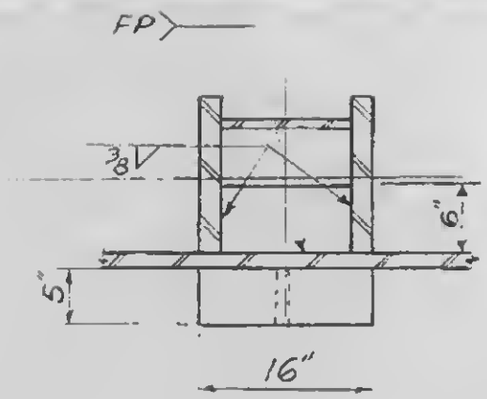

DETAIL 96 & 97

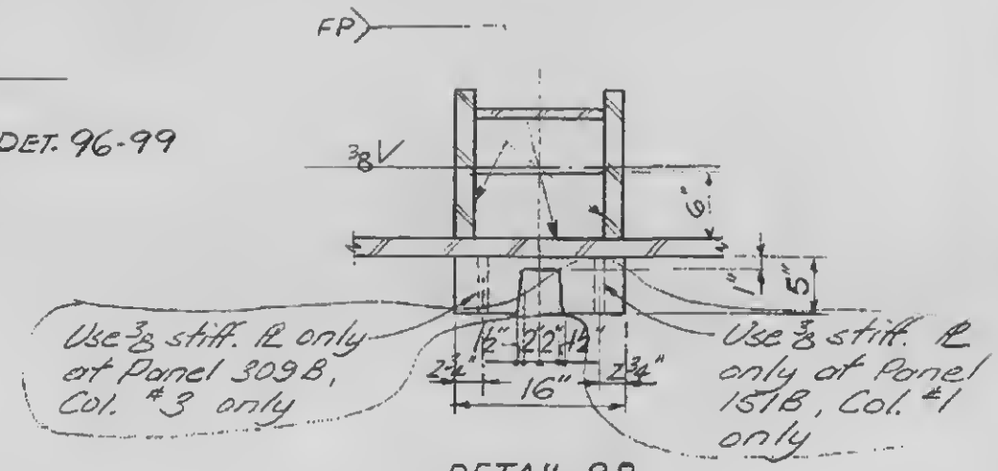

DETAIL 98

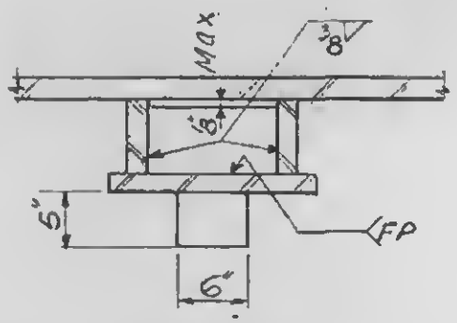

DETAIL 99

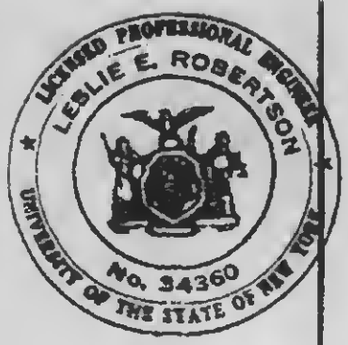

2-AB2-36

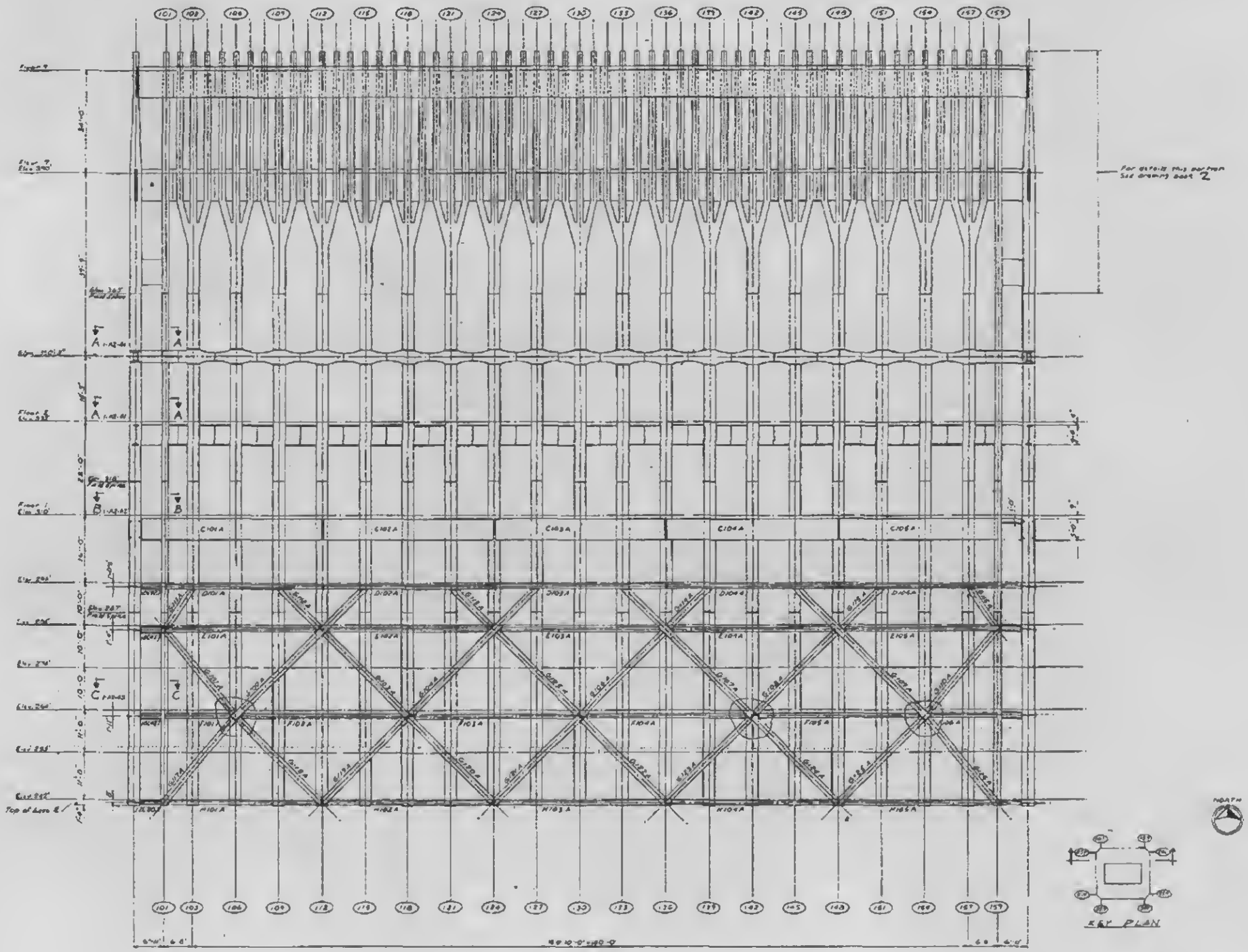

4-7-67

X

Note:
See drawing book section A2 for layout, general for ceiling, structural & section.

THE WORLD TRADE CENTER
THE PORT OF NEW YORK AUTHORITY

EXTERIOR WALL TO FLOOR 9 ELEVATION WALL 100

SA-125

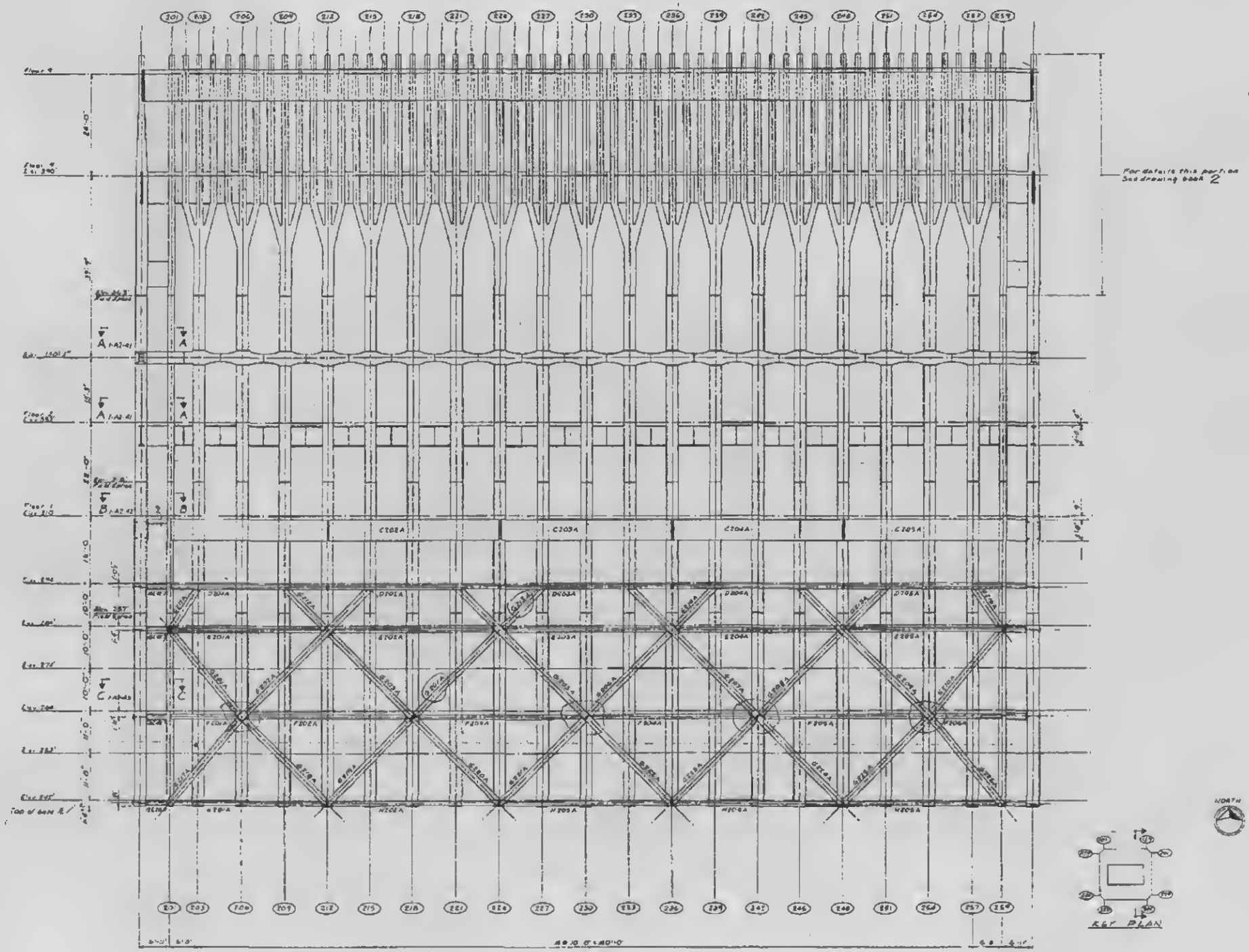

Note: See drawing book 1, Section A2 for Column, Lowerfloor & bracing schedule & details

THE WORLD TRADE CENTER
THE PORT OF NEW YORK AUTHORITY

MINORU YAMASAKI & ASSOCIATES
ARCHITECTS

EMERY ROTH & SONS
STRUCTURAL ENGINEERS

JAROS, BAUM & BOLLES
MECHANICAL ENGINEERS

JOSEPH R. LOSKIE & ASSOCIATES
ELECTRICAL ENGINEERS

THE PORT OF NEW YORK AUTHORITY
PERMANENT PROJECTS DEPARTMENT

EXTERIOR WALL
TO FLOOR 9
ELEVATION WALL 200

SA-126

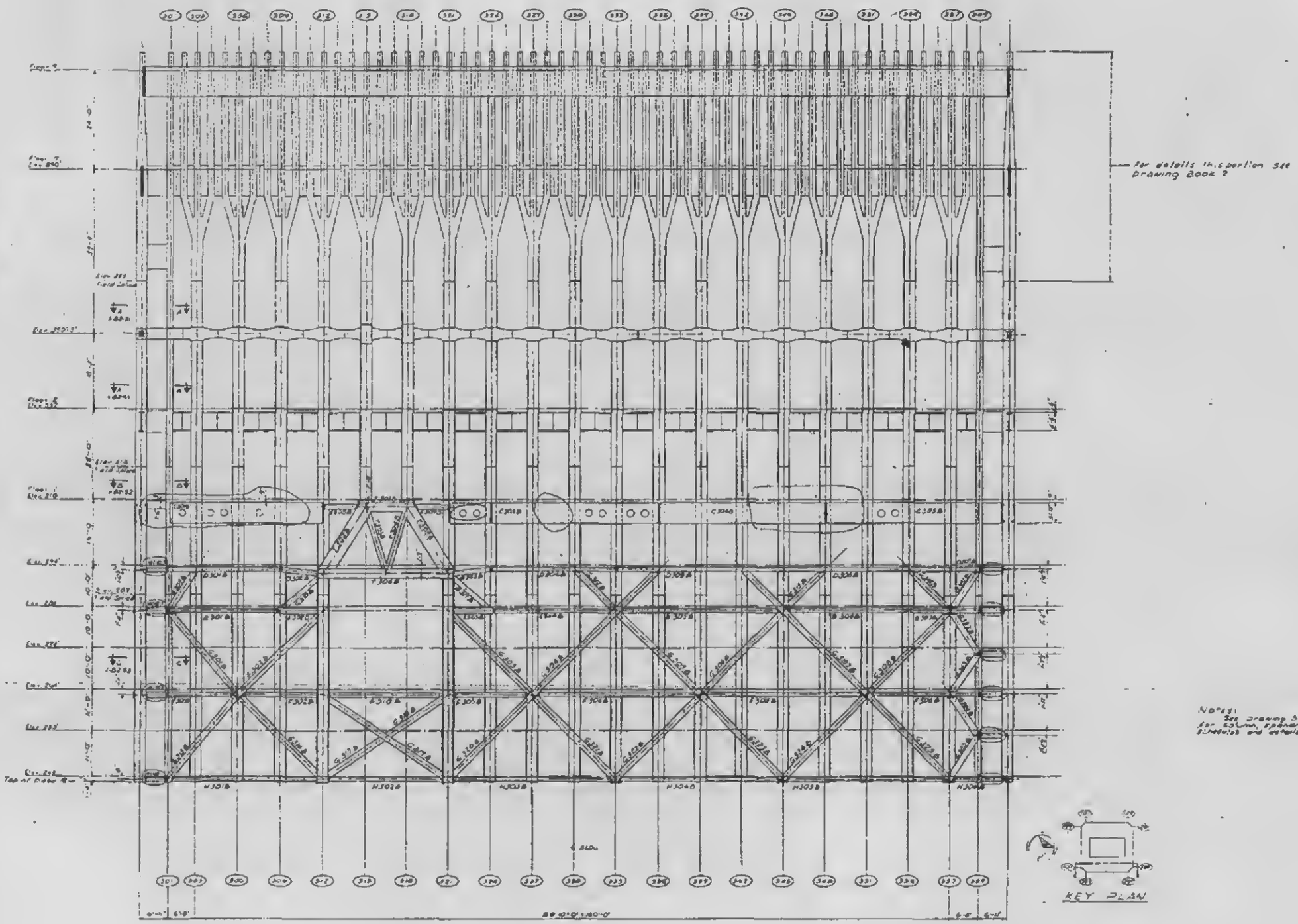

NOTES:
See Drawing Book 1, Section B.5 for column, spandrel, bracing & truss schedules and details.

THE WORLD TRADE CENTER
THE PORT OF NEW YORK AUTHORITY

EXTERIOR WALL TO FLOOR 9
ELEVATION WALL 300

53-127

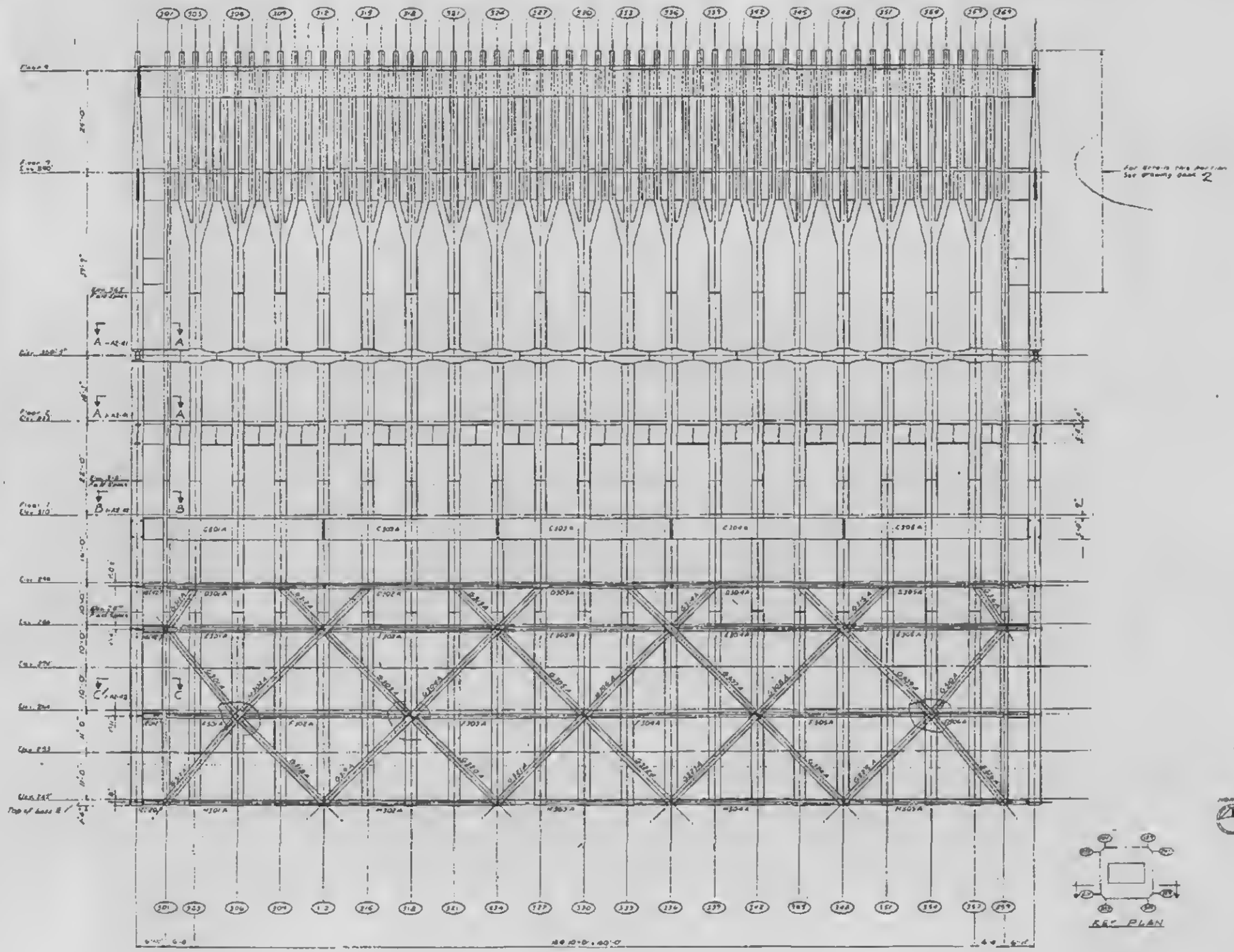

KEY PLAN

THE WORLD TRADE CENTER

THE PORT OF NEW YORK AUTHORITY

EXTERIOR WALL TO FLOOR 9 ELEVATION WALL 300

SA-127

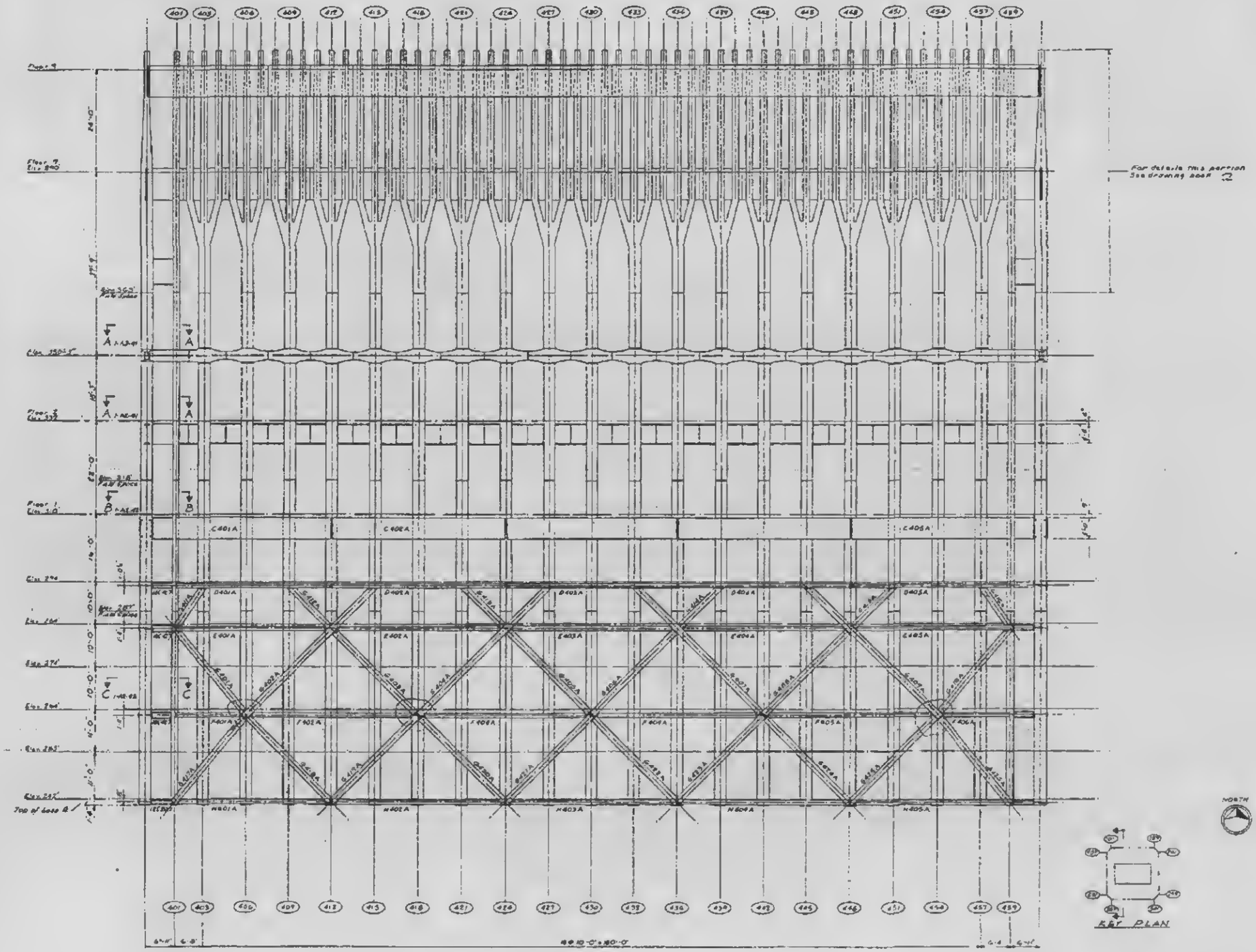

Note: See dwg sheet 1, Section A2 for Column, Spandrel & Bracing schedules & details

THE WORLD TRADE CENTER
THE PORT OF NEW YORK AUTHORITY

EXTERIOR WALL - TO FLOOR 9 ELEVATION WALL 400

SA-128

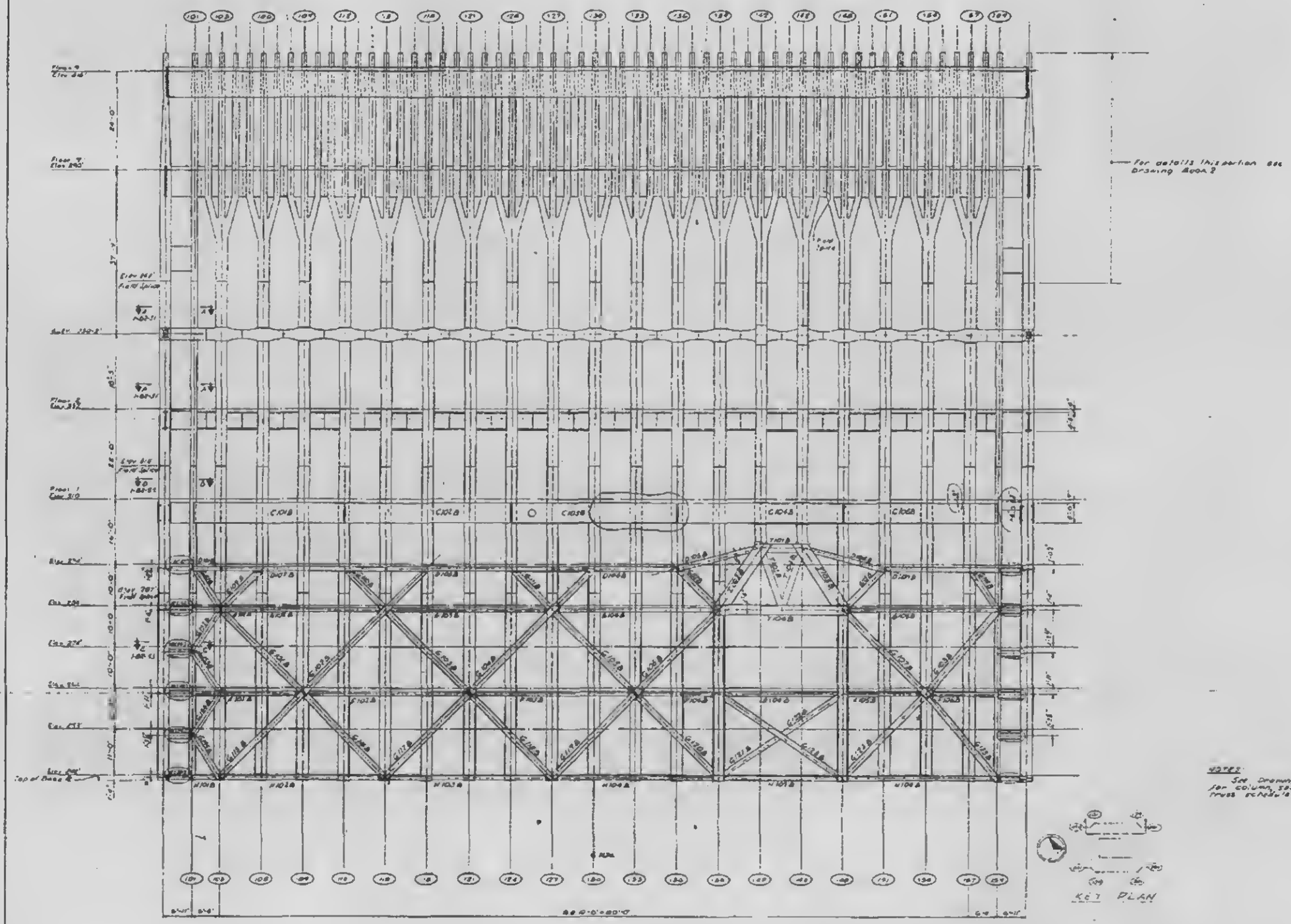

NOTES
See Drawing Book 1 Section D7 for column, standard, anchoring and truss schedules and details.

THE WORLD TRADE CENTER
THE PORT OF NEW YORK AUTHORITY

EXTERIOR WALL TO FLOOR 9
ELEVATION WALL 100

SB-125

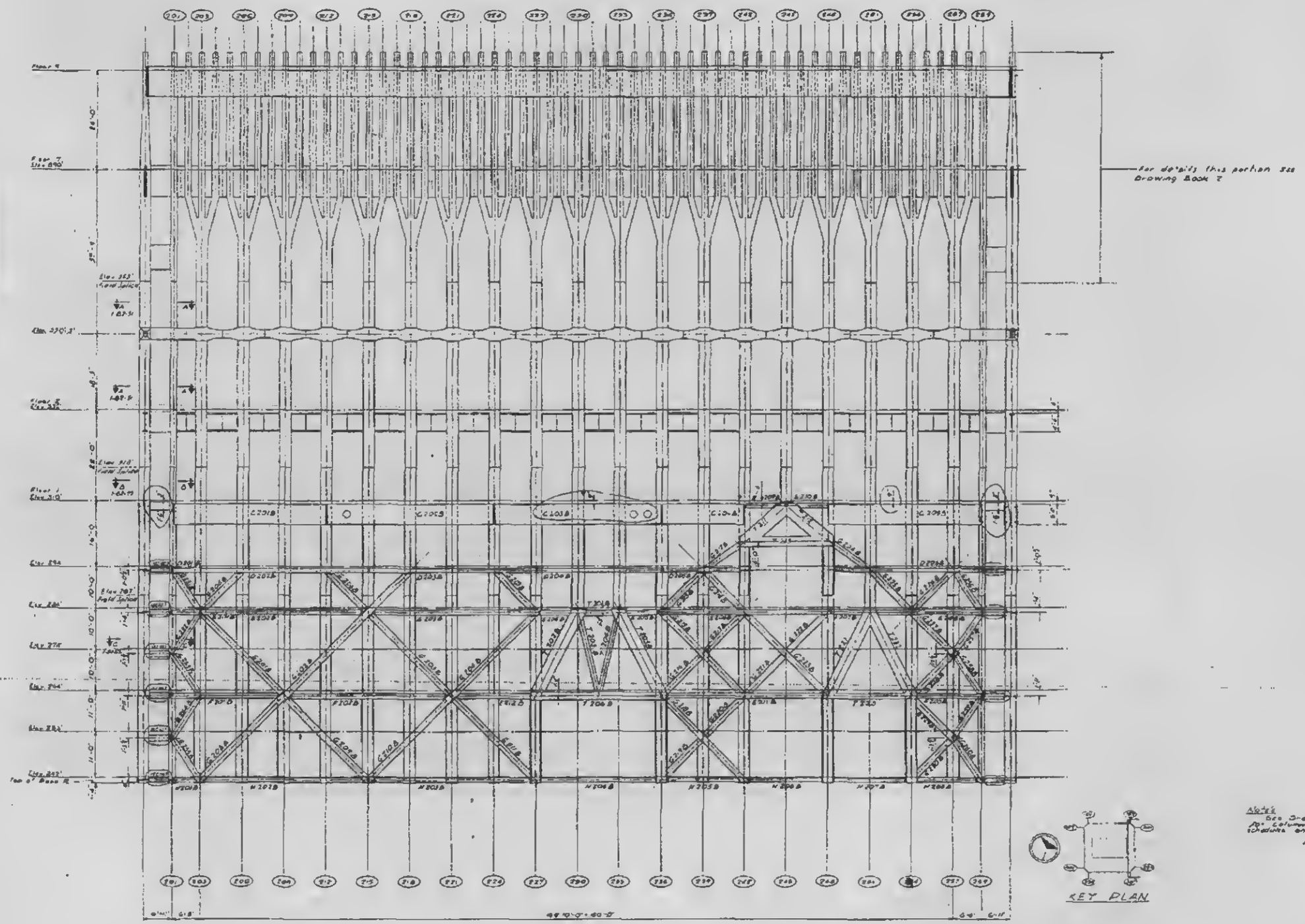

Note:
See Drawing Book 1 Section 3.
All columns, spandrel, drawing and floor schedules and details

THE WORLD TRADE CENTER
THE PORT OF NEW YORK AUTHORITY

EXTERIOR WALL TO FLOOR 9
ELEVATION WAL 200

SS-126

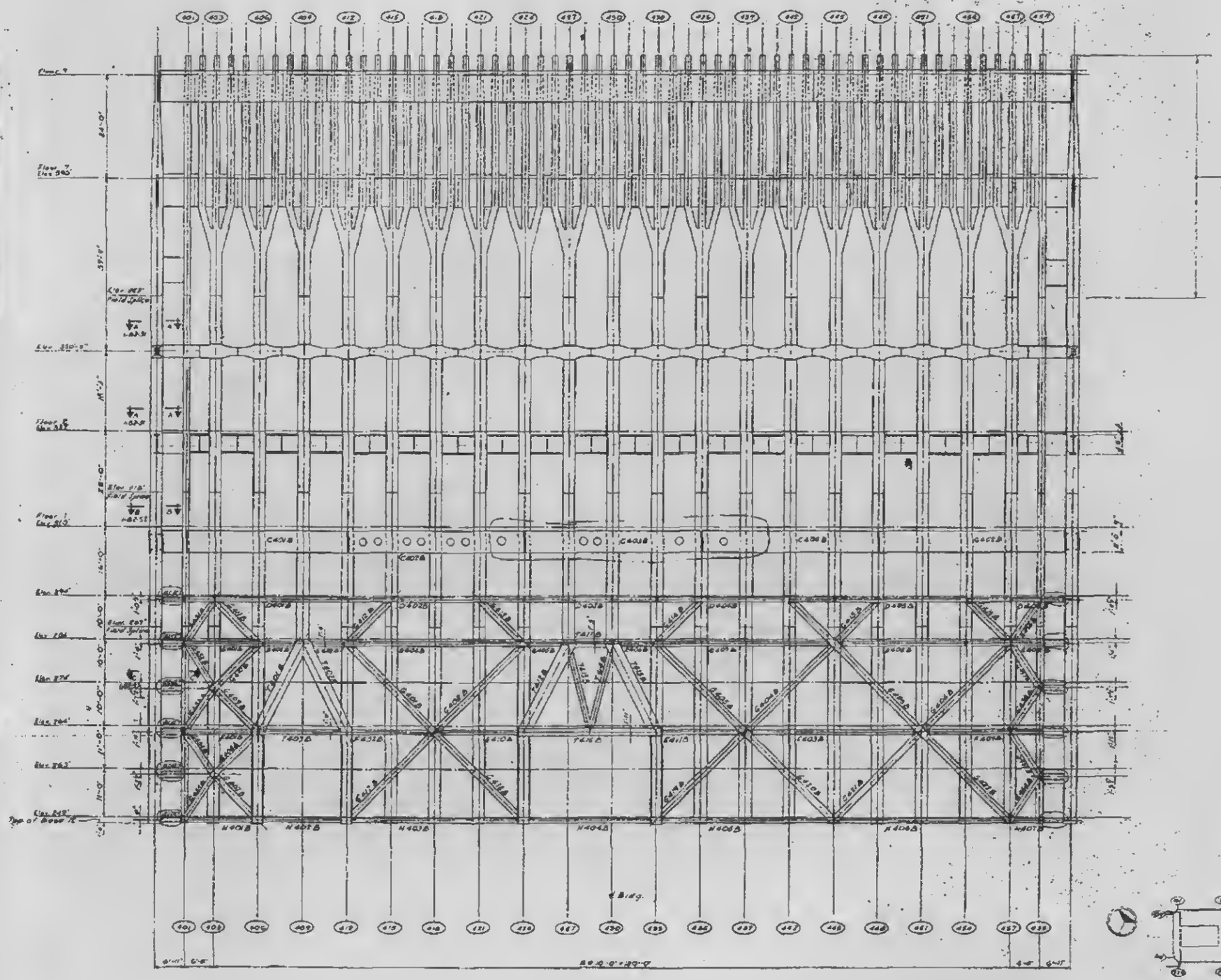

NOTES
1. See Drawing Book 1, Section B3 for column, spandrel, specialty and typical schedules and details.

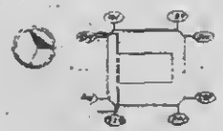

KEY PLAN

THE WORLD TRADE CENTER
THE PORT OF NEW YORK AUTHORITY

EXTERIOR WALL TO FLOOR 9 ELEVATION, WALL 400

SB-128