REV.

LERA LESLIE E. ROBERTSON ASSOCIATES, RLLP
CONSULTING STRUCTURAL ENGINEERS

P

DRAWING NO.

DRAFT

DESIGN

CHECK

WTC
DRAWING
BOOK

13

BOY 05A

BOOK 13

SKILLING, HELLE, CHRISTIANSEN, ROBERTSON — Structural & Civil Engineers

PROJECT THE WORLD TRADE CENTER | TITLE DRAWING BOOK 13 - CONTENTS | DATE 11-3-72

REVISIONS

Released for construction 11/20/72

2-5-73

5-7-73

BOOK	CHAPTER	CONTENT
13	K1.1	CONTENTS & DATE PAGE
	K1.2	GENERAL NOTES
	K1.3	PIPE OPENINGS IN BEAMS
	K1.4	TYPICAL STUD DETAILS
	K1.5	EXISTING BEAMS TO BE REMOVED
13	K2.1	GIRDER & COLUMN ELEVATIONS
	K2.2	COLUMN BASE DETAILS
	K2.3	TYPICAL GIRDER DETAILS
	K2.4	GIRDER COLUMN DETAILS
	K2.5	GIRDER FUTURE COLUMN DETS.
13	K3.1	GIRDER ELEVATIONS
	K3.2	TYPICAL GIRDER DETAILS
	K3.3	GIRDER CONNECTION DETAILS
	K3.4	GIRDER DETS. AT FUTURE COLS.
	K3.5	BEAM CONNECTIONS AT GIRDERS
13	K4.1	BALLROOM GIRDER ELEVATIONS
	K4.2	BALLROOM GIRDER TYPICAL DETS.
	K4.3	BALLROOM GIRDER END CONN.
13	K5.1	CONNECTIONS AT COLUMN
	K5.2	CONNECTION AT CANTILEVER
	K5.3	CONNECTIONS AT CANOPY
	K5.4	GIRDERS AT CANOPY
	K5.5	CONNECTIONS FUTURE CANOPY
13	K6.1	SLIDE CONNECTIONS TOWER B
	K6.2	DETAILS AT STAIR
13	K7.1	BEAM CONN. AT. EXISTING
	K7.2	BEAM END NOTCHES
	K7.3	BEAM NOTCHES EXISTING
13	K8.1	HANGER DETS. ABOVE MECH. PLATFORM
	K8.2	HANGER DETS. MECH. PLATFORM
	K8.3	DETAILS INTERMEDIATE LEVEL
13	K9.1	BRACING 310-332 ELEVATIONS
	K9.2	BRACING 310 332 DETAILS
13	K10.1	NOTCH & NEW SUPPORT FOR EXIST. BM.
	K10.2	SECTIONS AT ESCALATOR - EL. 294
	K10.3	DETAIL AT COL HS/2 - EL. 284
13	K11.1	EL. 310, ZONE K3 — CONN. DET.
	K11.2	EL. 310, ZONE K5 - CONN. DET.
	K11.3	EL. 310, ZONE K3 & 5 - FIRE DAMAGE - C.D.
	K11.4	EL. 310/303, ZONE K5 - MECH. - C.D.
13	K12	EL. 320, ZONE K3 & K5 PLATFORM DET.
13	K13	SECTIONS AT AUTO LIFT - EL. 284.

LICENSED PROFESSIONAL ENGINEER — LESLIE E. ROBERTSON — No. 34360 — UNIVERSITY OF THE STATE OF NEW YORK

DESIGNED

DRAWN

REVIEWED

SKILLING, HELLE, CHRISTIANSEN, ROBERTSON — **Structural & Civil Engineers**

PROJECT: THE WORLD TRADE CENTER | TITLE: DRAWING BOOK 13 - DATE PAGE | DATE: 11/ 3/72

REVISIONS

5-6-73
5-7-73
6-4-73

6/20/73

13- K1.1- 1	5/ 7/73
13- K1.1- 2	6/ 4/73
13- K1.1- 3	6/ 4/73
13- K1.2- 1	12/11/72
13- K1.3- 1	11/20/72
13- K1.3- 2	2/28/73
13- K1.4- 1	11/20/72
13- K1.5- 1	12/11/72
13- K2.1- 1	4/ 2/73
13- K2.1- 2	2/ 5/73
13- K2.1- 3	2/ 5/73
13- K2.1- 4	12/11/72
13- K2.1- 5	11/20/72
13- K2.1- 6	4/20/73
13- K2.1- 7	4/20/73
13- K2.1- 8	6/ 4/73
13- K2.1- 9	12/11/72
13- K2.1-10	4/20/73
13- K2.1-11	4/20/73
13- K2.1-12	4/20/73
13- K2.1-13	11/20/72
13- K2.1-14	12/11/72
13- K2.1-15	12/11/72
13- K2.2- 1	2/ 5/73
13- K2.2- 2	2/ 5/73
13- K2.2- 3	2/ 5/73
13- K2.2- 4	11/20/72
13- K2.2- 5	12/11/72
13- K2.3- 1	11/20/72
13- K2.3- 2	12/11/72
13- K2.3- 3	6/ 4/73

13- K2.4- 1	11/20/72
13- K2.4- 2	11/20/72
13- K2.4- 3	2/ 5/73
13- K2.4- 4	2/ 5/73
13- K2.4- 5	2/ 5/73
13- K2.4- 6	11/20/72
13- K2.4- 7	2/ 5/73
13- K2.4- 8	11/20/72
13- K2.4- 9.1	11/20/72
13- K2.4- 9.2	11/20/72
13- K2.4-10	11/20/72
13- K2.4-11	11/20/72
13- K2.4-12	11/20/72
13- K2.4-13	4/20/73
13- K2.4-14	4/20/73
13- K2.4-15	12/11/72
13- K2.4-16	4/20/73
13- K2.5- 1	11/20/72
13- K2.5- 2	11/20/72
13- K2.5- 3.1	11/20/72
13- K2.5- 3.2	11/20/72
13- K2.5- 4	[redacted]
13- K2.5- 5	[redacted]
13- K2.5- 6	4/20/73
13- K2.5- 7	11/20/72
13- K3.1- 1	11/20/72
13- K3.1- 2	12/11/72
13- K3.1- 3	12/11/72
13- K3.1- 4	11/20/72
13- K3.1- 5	12/11/72
13- K3.1- 6	6/ 4/73
13- K3.1- 7	[redacted]
13- K3.1- 8	12/11/72
13- K3.1- 9	6/ 4/73
13- K3.1-10	4/20/73
13- K3.1-11	11/20/72
13- K3.1-12	4/20/73
13- K3.2- 1	11/20/72

13- K3.3- 1	11/20/72
13- K3.3- 2	11/20/72
13- K3.3- 3	12/11/72
13- K3.3- 4	11/20/72
13- K3.3- 5	11/20/72
13- K3.3- 6	11/20/72
13- K3.3- 7	11/20/72
13- K3.3- 8	11/20/72
13- K3.3- 9	11/20/72
13- K3.3-10	11/20/72
13- K3.3-11	11/20/72
13- K3.3-12	6/ 4/73
13- K3.3-13	11/20/72
13- K3.3-14	6/ 4/73
13- K3.3-15	2/ 5/73
13- K3.3-16	11/20/72
13- K3.3-17	11/20/72
13- K3.4- 1	2/ 5/73
13- K3.4- 2	2/ 5/73
13- K3.4- 3	2/ 5/73
13- K3.4- 4	11/24/72
13- K3.4- 5.1	2/ 5/73
13- K3.4- 5.2	11/24/72
13- K3.4- 6	2/ 5/73
13- K3.4- 7	11/24/72
13- K3.4- 8	[redacted] R
13- K3.4- 9	11/24/72
13- K3.4-10	6/ 4/73
13- K3.4-11	11/24/72
13- K3.4-12.1	11/24/72
13- K3.4-12.2	6/ 4/73
13- K3.5- 1	2/ 5/73
13- K3.5- 2	11/20/72

LICENSED PROFESSIONAL ENGINEER
LESLIE E. ROBERTSON
No. 34350
THE STATE OF NEW YORK

SKILLING, HELLE, CHRISTIANSEN, ROBERTSON — **Structural & Civil Engineers**

PROJECT	TITLE	DATE
THE WORLD TRADE CENTER	DRAWING BOOK 13 - DATE PAGE	11/ 3/72

REVISIONS

5-6-73

5-7-73

6-4-73

13- K1.1- 1	5/ 7/73
13- K1.1- 2	6/ 4/73
13- K1.1- 3	6/ 4/73
13- K1.2- 1	12/11/72
13- K1.3- 1	11/20/72
13- K1.3- 2	2/28/73
13- K1.4- 1	11/20/72
13- K1.5- 1	12/11/72
13- K2.1- 1	4/ 2/73
13- K2.1- 2	2/ 5/73
13- K2.1- 3	2/ 5/73
13- K2.1- 4	12/11/72
13- K2.1- 5	11/20/72
13- K2.1- 6	4/20/73
13- K2.1- 7	4/20/73
13- K2.1- 8	6/ 4/73
13- K2.1- 9	12/11/72
13- K2.1-10	4/20/73
13- K2.1-11	4/20/73
13- K2.1-12	4/20/73
13- K2.1-13	11/20/72
13- K2.1-14	12/11/72
13- K2.1-15	12/11/72
13- K2.2- 1	2/ 5/73
13- K2.2- 2	2/ 5/73
13- K2.2- 3	2/ 5/73
13- K2.2- 4	11/20/72
13- K2.2- 5	12/11/72
13- K2.3- 1	11/20/72
13- K2.3- 2	12/11/72
13- K2.3- 3	6/ 4/73

13- K2.4- 1	11/20/72
13- K2.4- 2	11/20/72
13- K2.4- 3	2/ 5/73
13- K2.4- 4	2/ 5/73
13- K2.4- 5	2/ 5/73
13- K2.4- 6	11/20/72
13- K2.4- 7	2/ 5/73
13- K2.4- 8	11/20/72
13- K2.4- 9.1	11/20/72
13- K2.4- 9.2	11/20/72
13- K2.4-10	11/20/72
13- K2.4-11	11/20/72
13- K2.4-12	11/20/72
13- K2.4-13	4/20/73
13- K2.4-14	4/20/73
13- K2.4-15	12/11/72
13- K2.4-16	4/20/73
13- K2.5- 1	11/20/72
13- K2.5- 2	11/20/72
13- K2.5- 3.1	11/20/72
13- K2.5- 3.2	11/20/72
13- K2.5- 4	11/20/72
13- K2.5- 5	4/20/73
13- K2.5- 6	4/20/73
13- K2.5- 7	11/20/72
13- K3.1- 1	11/20/72
13- K3.1- 2	12/11/72
13- K3.1- 3	12/11/72
13- K3.1- 4	11/20/72
13- K3.1- 5	12/11/72
13- K3.1- 6	6/ 4/73
13- K3.1- 7	6/ 4/73
13- K3.1- 8	12/11/72
13- K3.1- 9	6/ 4/73
13- K3.1-10	4/20/73
13- K3.1-11	11/20/72
13- K3.1-12	4/20/73
13- K3.2- 1	11/20/72

13- K3.3- 1	11/20/72
13- K3.3- 2	11/20/72
13- K3.3- 3	12/11/72
13- K3.3- 4	11/20/72
13- K3.3- 5	11/20/72
13- K3.3- 6	11/20/72
13- K3.3- 7	11/20/72
13- K3.3- 8	11/20/72
13- K3.3- 9	11/20/72
13- K3.3-10	11/20/72
13- K3.3-11	11/20/72
13- K3.3-12	6/ 4/73
13- K3.3-13	11/20/72
13- K3.3-14	6/ 4/73
13- K3.3-15	2/ 5/73
13- K3.3-16	11/20/72
13- K3.3-17	11/20/72
13- K3.4- 1	2/ 5/73
13- K3.4- 2	2/ 5/73
13- K3.4- 3	2/ 5/73
13- K3.4- 4	11/24/72
13- K3.4- 5.1	2/ 5/73
13- K3.4- 5.2	11/24/72
13- K3.4- 6	2/ 5/73
13- K3.4- 7	11/24/72
13- K3.4- 8	11/24/72
13- K3.4- 9	11/24/72
13- K3.4-10	6/ 4/73
13- K3.4-11	11/24/72
13- K3.4-12.1	11/24/72
13- K3.4-12.2	6/ 4/73
13- K3.5- 1	2/ 5/73
13- K3.5- 2	11/20/72

LICENSED PROFESSIONAL ENGINEER
LESLIE E. ROBERTSON
NO. 34360
STATE OF NEW YORK

SKILLING, HELLE, CHRISTIANSEN, ROBERTSON — **Structural & Civil Engineers**

PROJECT	TITLE	DATE
THE WORLD TRADE CENTER	DRAWING BOOK 13 - DATE PAGE	2/ 5/73

REVISIONS

11-24-72
12-11-72
2-5-73
5-7-73
6-4-73

13- K4.1- 1	6/ 4/73
13- K4.1- 2	6/ 4/73
13- K4.2- 1	6/ 4/73
13- K4.3- 1	11/24/72
13- K4.3- 2	11/24/72
13- K4.3- 3	11/20/72
13- K4.3- 4	11/20/72
13- K5.1- 1	11/24/72
13- K5.1- 2	11/24/72
13- K5.2- 1	4/20/73
13- K5.3- 1.1	11/24/72
13- K5.3- 1.2	11/24/72
13- K5.3- 1.3	2/ 5/73
13- K5.3- 2	11/24/72
13- K5.3- 3.1	11/24/72
13- K5.3- 3.2	4/20/73
13- K5.3- 4	11/24/72
13- K5.3- 5	11/24/72
13- K5.3- 6	11/24/72
13- K5.3- 7	11/24/72
13- K5.4- 1	11/24/72
13- K5.5- 1	11/24/72
13- K6.1- 1	11/20/72
13- K6.1- 2	11/20/72
13- K6.1- 3	11/20/72
13- K6.1- 4	11/20/72
13- K6.1- 5	4/20/73
13- K6.2- 1	11/20/72
13- K6.2- 2	11/20/72
13- K6.2- 3	11/20/72
13- K6.2- 4	2/ 5/73
13- K7.1- 1	2/ 5/73
13- K7.2- 1	11/20/72
13- K7.3- 1	11/20/72
13- K8.1- 1	11/24/72
13- K8.1- 2	11/24/72
13- K8.1- 3	6/ 4/73
13- K8.2- 1	2/ 5/73
13- K8.2- 2	2/ 5/73
13- K8.3- 1	2/ 5/73
13- K8.3- 2	11/24/72
13- K8.3- 3	11/24/72
13- K9.1- 1	12/11/72
13- K9.1- 2	4/20/73
13- K9.2- 1	11/20/72
13- K9.2- 2	4/20/73
13- K9.2- 3	11/20/72
13- K9.2- 4	11/20/72
13- K10.1-1	5/ 7/73
13- K10.1-2	3/15/73
13- K10.1-3	3/15/73
13- K10.1-4	3/15/73
13- K10.2-1	3/15/73
13- K10.2-2	3/15/73
13- K10.3-4	3/15/73
13- K11.1-1	5/ 7/73
13- K11.1-2	5/ 7/73
13- K11.1-3.1	5/ 7/73
13- K11.1-3.2	5/ 7/73
13- K11.1-3.3	5/ 7/73
13- K11.1-3.4	5/ 7/73
13- K11.1-4	5/ 7/73
13- K11.1-5.1	5/ 7/73
13- K11.1-5.2	5/ 7/73
13- K11.2-1	5/ 7/73
13- K11.2-2.1	5/ 7/73
13- K11.2-2.2	5/ 7/73
13- K11.2-2.3	5/ 7/73
13- K11.2-3.1	5/ 7/73
13- K11.2-3.2	5/ 7/73
13- K11.2-4.1	5/ 7/73
13- K11.2-4.2	5/ 7/73
13- K11.2-5.1	5/ 7/73
13- K11.2-5.2	5/ 7/73
13- K11.3-1	5/ 7/73
13- K11.3-2	5/ 7/73
13- K11.4-1	5/ 7/73
13- K11.4-2	5/ 7/73
13- K11.4-3	6/ 4/73
13- K12 -1	5/ 7/73
13- K12 -2	5/ 7/73
13- K13-1	1/12/73
13- K13-2	1/12/73
13- K13-3	1/12/73
13- K13-4	1/12/73

LICENSED PROFESSIONAL ENGINEER
LESLIE E. ROBERTSON
No 34360
OF THE STATE OF NEW YORK

REVISIONS

Released for construction 11/20/72
12/11/72

GENERAL NOTES

The following provisions apply to all Drawing Book 13 drawings, unless specifically shown as noted otherwise in Drawing Book 13 drawings or in the plans.

A. Specification

1. All material, fabrication and erection shall be in accordance with Basic Project Specifications.

B. Dimensions

1. Contractor will be furnished field measurement for existing column locations and splice elevations prior to submitting mill orders.
2. Shop Drawings must indicate these field measurements prior to approval.
3. Columns shall be installed vertical above existing columns, with girder lengths adjusted to fit; however, detail material for future columns shall be installed in its theoretical location.

C. Materials

1. All steel sections, plates, detail materials and other members shall be ASTM A36, unless specifically shown otherwise.
2. Members indicated in the Drwings as "tube" are rectangular seamless structural tubing and shall conform to ASTM A501.

D. Bolted Connections

1. All bolted connections shall be high strength friction type, except where specifically noted as A307, or A490X (Bearing Type with threads excluded in shear plane).
2. A minimum of 2-3/4" Ø bolts shall be used at each member connected except where specifically noted in the Drawings.

E. Welded Connections

1. All manual welded electrodes shall be E70XX low hydrogen type.
2. All submerged arc welding shall be Grade SAW-2.
3. Studs shall be applied using a stud welding system providing a minimum current of 2000 amperes.
4. Where the symbols are shown in the drawings the fabricator shall provide a complete penetration weld. The fabricator may provide single or double bevel, V, U or J groove welds conforming to approved welding procedure specifications.

F. Erection Sequence

1. Character of two-way girder connections require sequenced erection of girders including shoring of one end prior to installing perpendicular supporting girder; therefore, Contractor to submit Erection Sequence and shoring to the Engineer for approval.

F. Miscellaneous

1. Specific details and notes shall prevail over general details and notes.

   Any conflict or apparent conflict between drawings and/or notes shall be submitted to the Engineer for his decision before construction or preparation of shop drawings has begun.
2. Section/details indicated 3.3-10E means Section/Detail E in Drawing Book 13 page 13-K3.3-10.
3. Page numbers in Drawing Book 13 which include more than one page are numbered 2.1, 2.2, 2.3, etc. Page numbers which include only one page are numbered 2 with no decimal. Where reference is made to page numbers with more than one page, the decimal portion of the page number is not included. Therefore, a section or detail indicated 3-2 may be 13-K3-2.1, 2.3, etc.

G. Finishing

1. Compression joints depending upon contact bearing are indicated thus in the drawings.
2. Where surfaces are finished by milling, plate thickness shown in the Drawings shall be reduced a maximum of 1/8 inch for plates up to and including 2 inches thick, a maximum of 1/4 inch for plates over 2 inches thick, except that plates indicated thus (1.2-1G) in the Drawings shall be increased in thickness to allow for milling.
3. Top of Base Plates at future columns shall be at elevation shown in the Drawings, after erection. Base Plates shall be thickened as required for milling operation in order to achieve this elevation.
4. The surface of each girder flange in contact with a cap plate or base plate may be considered finished without further work where the following criteria is met: Contact bearing surfaces shall have at least 75% of the entire contact area in full bearing and the separation of the remaining portion shall not exceed 0.01 inch except adjacent to toes of flanges or corners of plates where a localized separation not exceeding 0.025 inch is permissible.

LICENSED PROFESSIONAL ENGINEER — LESLIE E. ROBERTSON — No. 34360 — UNIVERSITY OF THE STATE OF NEW YORK

DESIGNED

DRAWN

REVIEWED

SKILLING, HELLE, CHRISTIANSEN, ROBERTSON — Structural & Civil Engineers

PROJECT: THE WORLD TRADE CENTER | TITLE: PIPE OPENINGS IN BEAMS | DATE: 11-3-72

REVISIONS

Released for Construction 11-20-72

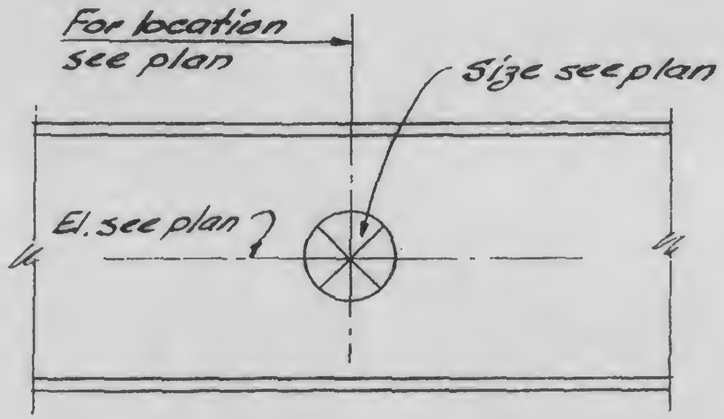

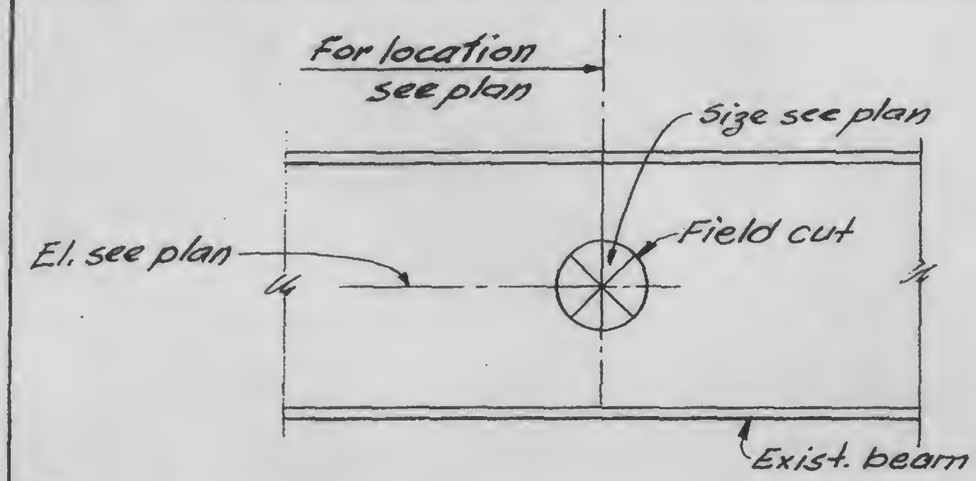

A | E

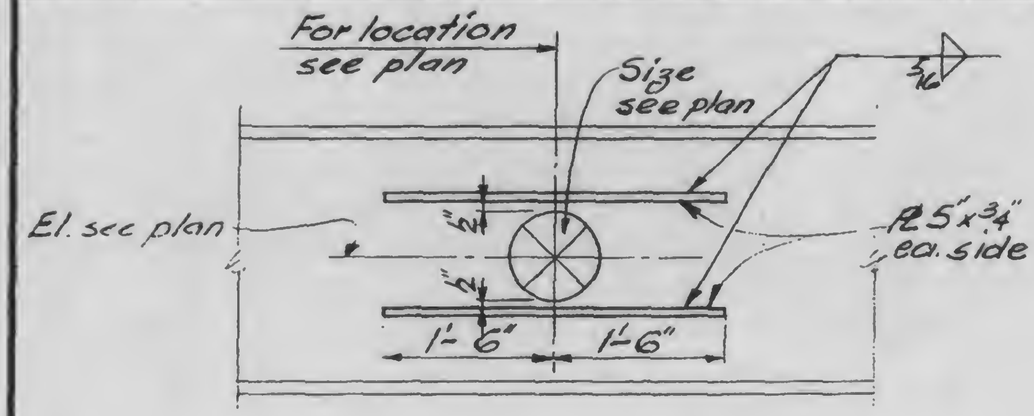

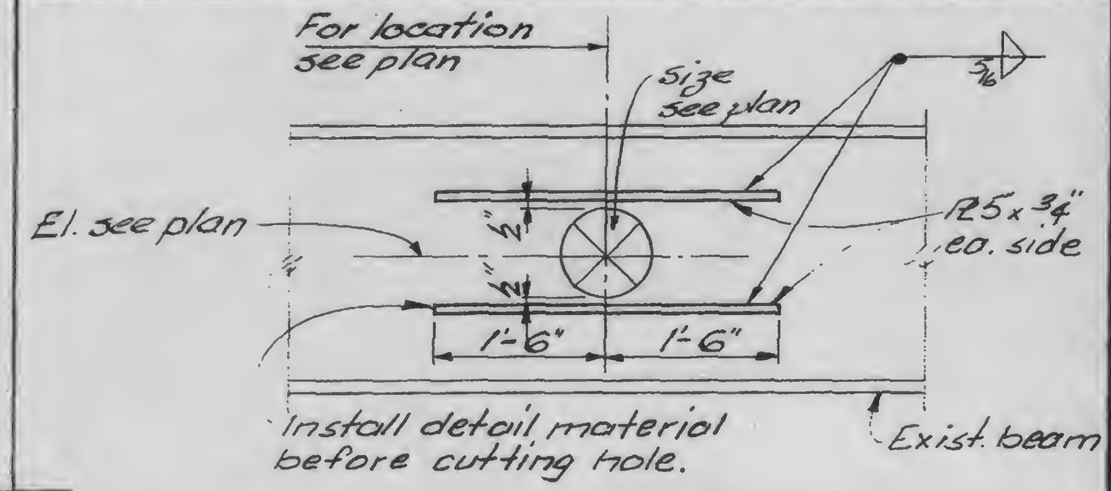

B | F

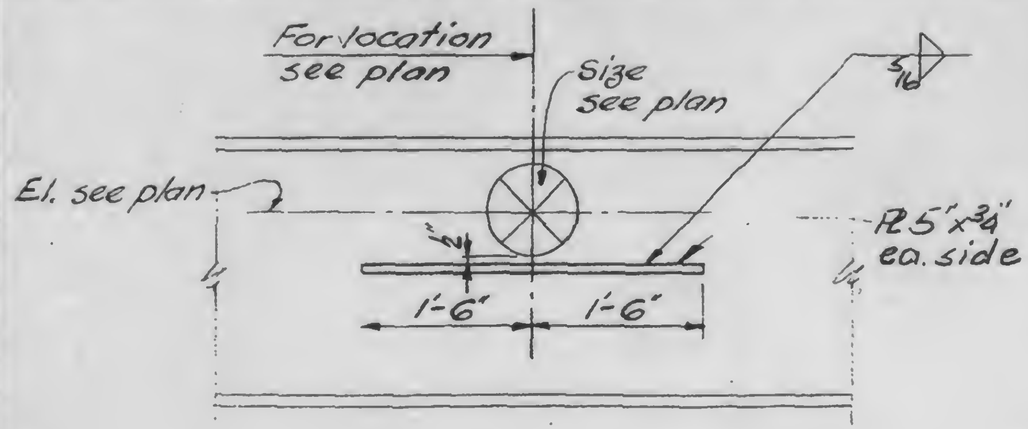

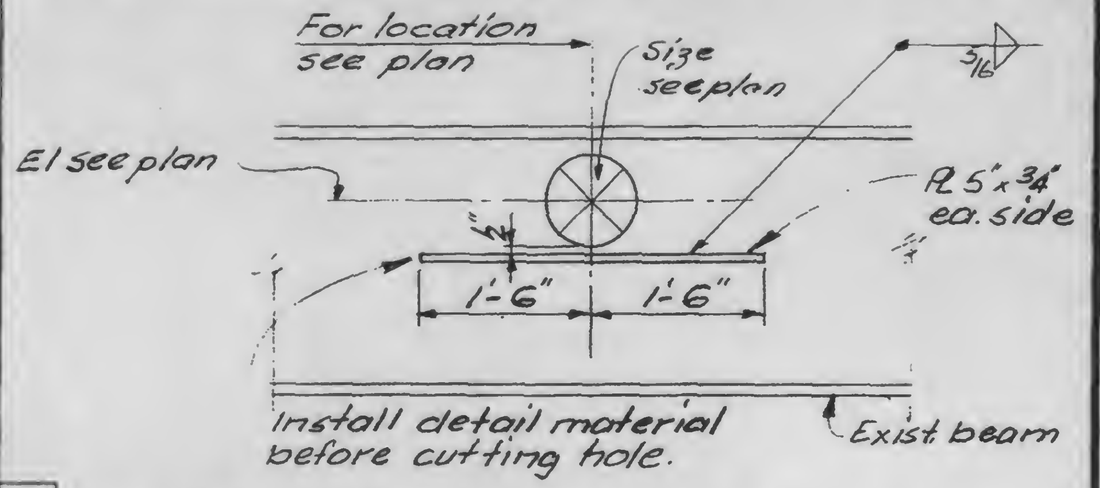

C as shown
D upside down

C	G
D	H

G as shown
H upside down

LICENSED PROFESSIONAL ENGINEER — LESLIE E. ROBERTSON — No. 34360 — UNIVERSITY OF THE STATE OF NEW YORK

DESIGNED

DRAWN John Gnieny

REVIEWED

13-K1.3-1

SKILLING, HELLE, CHRISTIANSEN, ROBERTSON — Structural & Civil Engineers

PROJECT: THE WORLD TRADE CENTER

TITLE: PIPE OPENINGS IN BEAMS

DATE: 2-12-73

REVISIONS

2-26-73

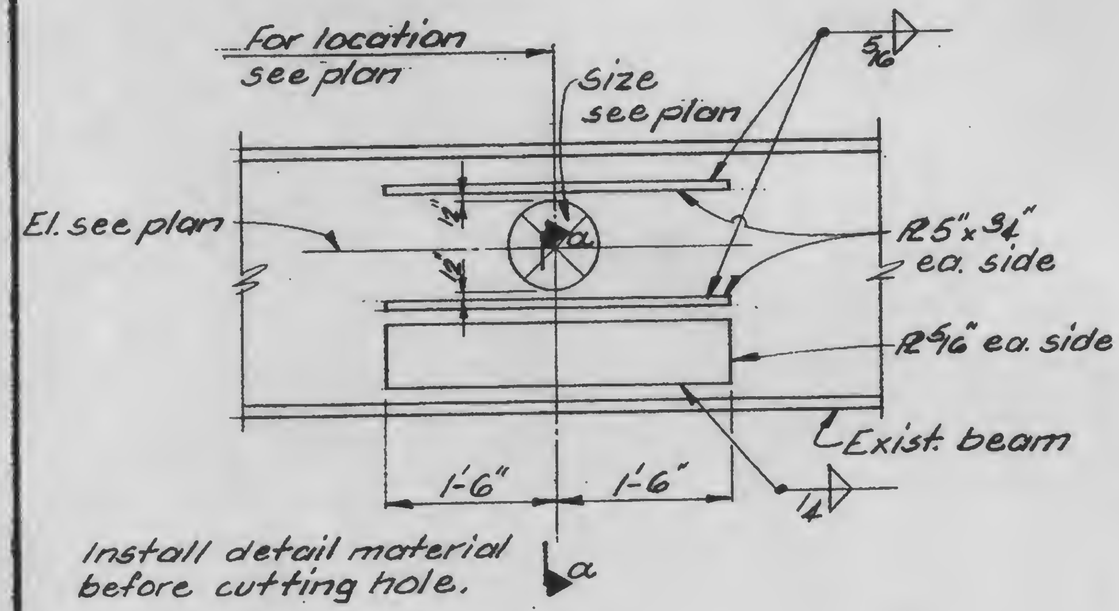

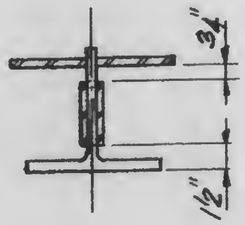

A a

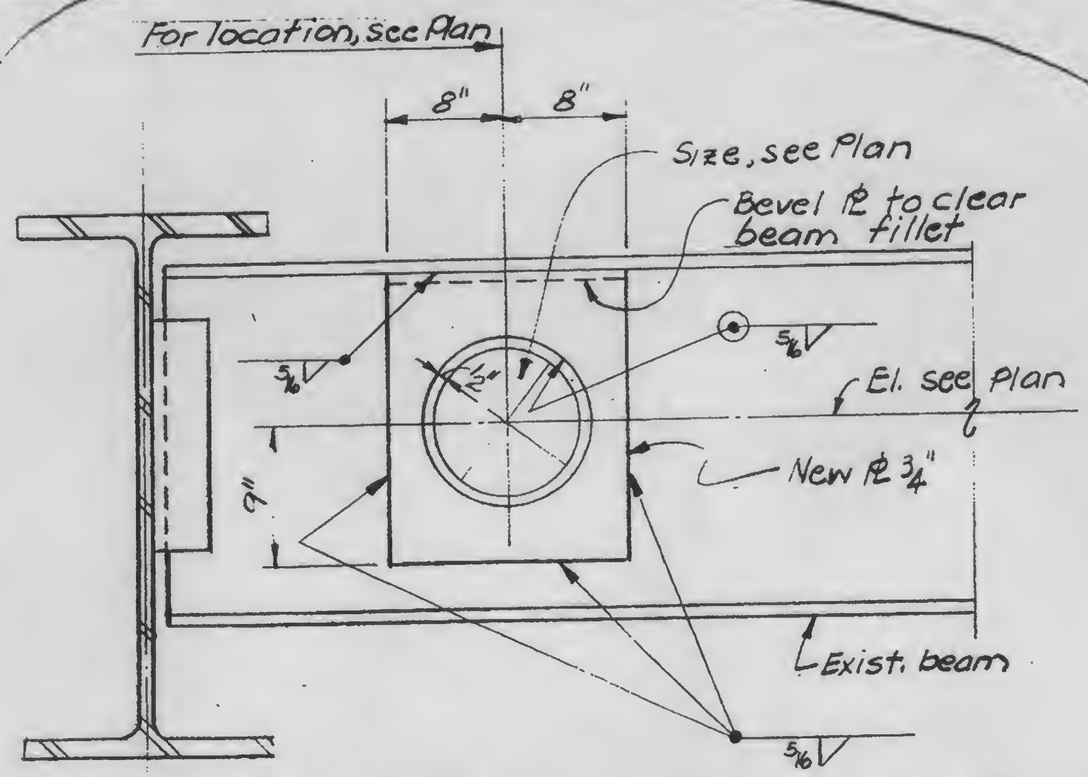

NOTE: Install & completely weld new PL before cutting hole in exist. beam

B

DESIGNED

DRAWN T.R.

REVIEWED

13-K1.3-2

SKILLING, HELLE, CHRISTIANSEN, ROBERTSON — Structural & Civil Engineers

PROJECT: THE WORLD TRADE CENTER | TITLE: TYPICAL STUD DETAILS | DATE: 11-3-72

REVISIONS

Released for construction 11-20-72

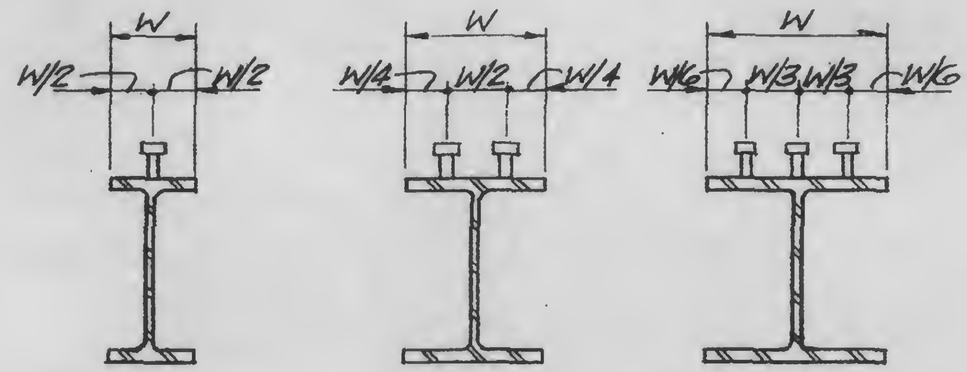

One Row
WS 6
6s WS9 (Note 4)

Two Rows
(Note 4)

Three Rows
(Note 5)

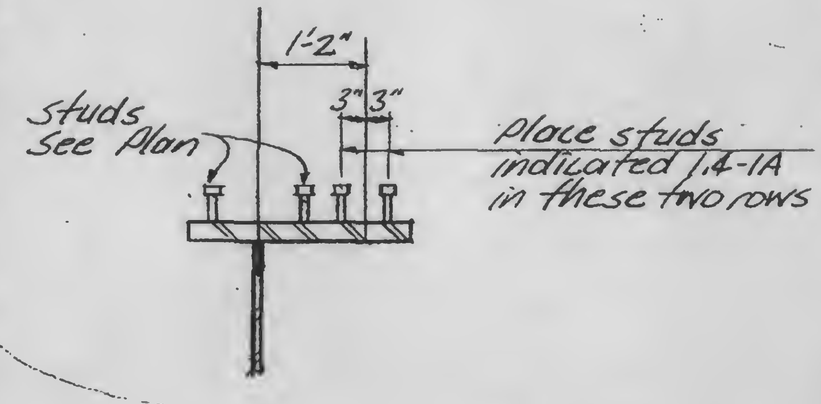

A

Notes:

3. All studs are ¾"φ x 0'-3" headed shear studs.
4. Use two rows for W=6" to W=9" where studs in a single row would otherwise be less than 4" o.c. Use two rows for W=9" or more where studs in one row would otherwise be less than 4" o.c.
5. Use three rows for W=9" or more where studs in two rows would otherwise be less than 4" o.c.

LICENSED PROFESSIONAL ENGINEER
LESLIE E. ROBERTSON
No 34360
UNIVERSITY OF THE STATE OF NEW YORK

DESIGNED

DRAWN
T.R

REVIEWED

13-K1.4-1

SKILLING, HELLE, CHRISTIANSEN, ROBERTSON — Structural & Civil Engineers

PROJECT: THE WORLD TRADE CENTER

TITLE: PART PLAN - EXISTING BEAMS TO BE REMOVED

DATE: 11-20-72

REVISIONS

RELEASED FOR CONSTRUCTION 11-20-72

12-11-72

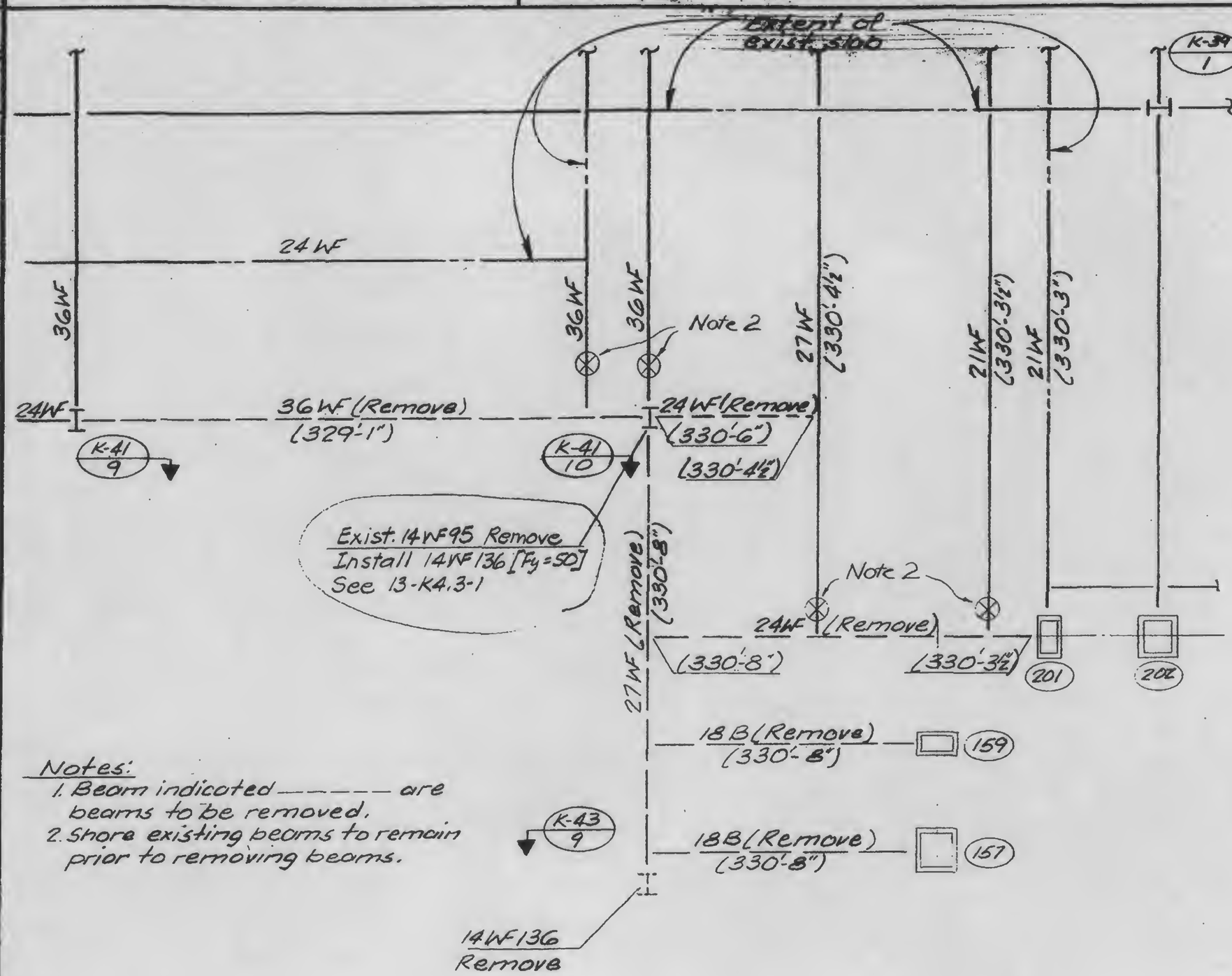

Notes:
1. Beam indicated ------ are beams to be removed.
2. Shore existing beams to remain prior to removing beams.

Part Plan at El. 332'-0"

LICENSED PROFESSIONAL ENGINEER — LESLIE E. ROBERTSON — No. 34360 — UNIVERSITY OF THE STATE OF NEW YORK

DESIGNED

DRAWN TR

REVIEWED

13-K1.5-1

SKILLING, HELLE, CHRISTIANSEN, ROBERTSON — STRUCTURAL ENGINEERS

PROJECT THE WORLD TRADE CENTER — GIRDER ELEVATION LINE 31

DATE 11-3-72

REVISIONS

RELEASE FOR CONSTRUCTION 11-20-72

2-5-73

4-2-73

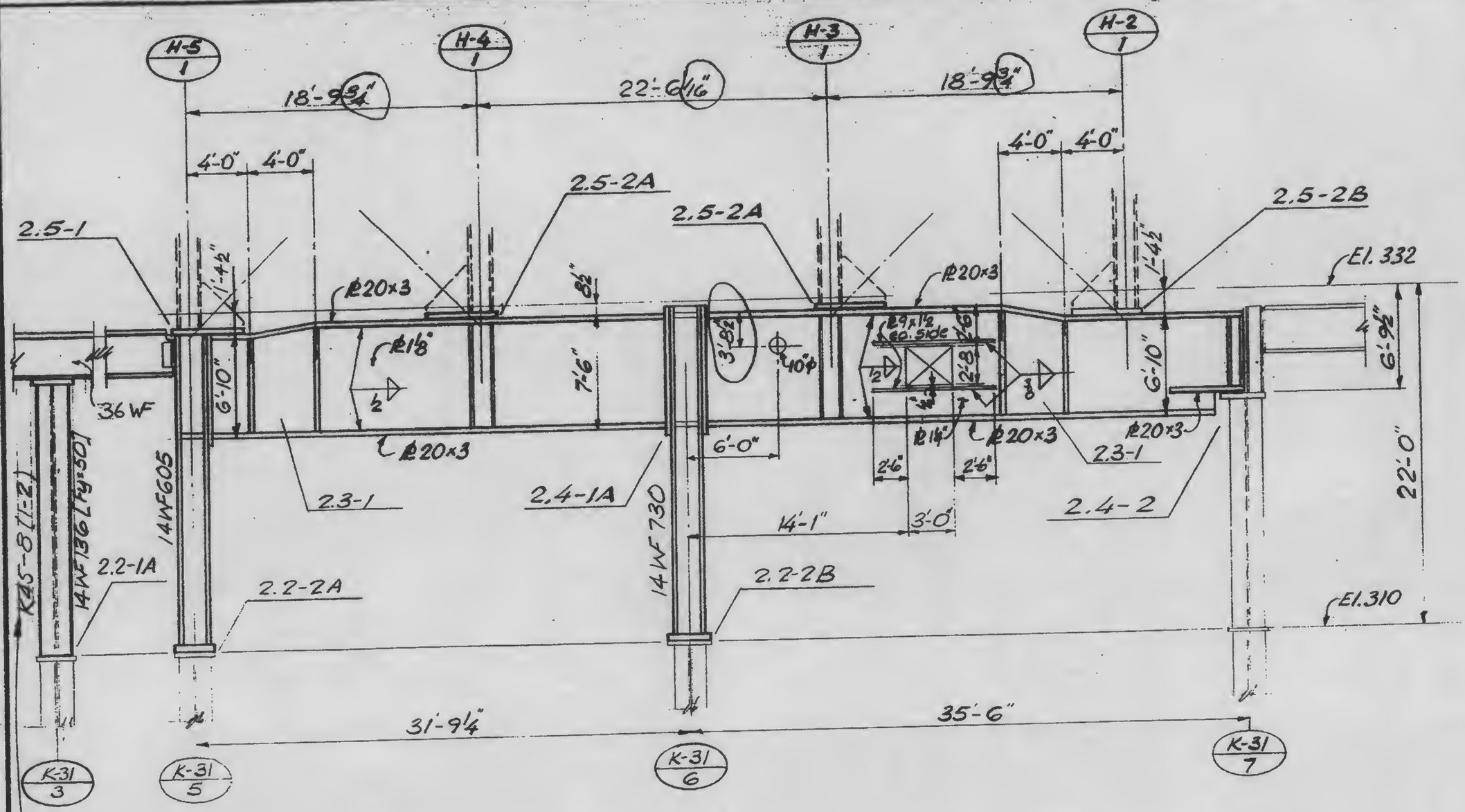

Note

Cols. designated with K XX-X(X-X) are as fabricated. Columns to be reworked as req'd and used in locations indicated.

LICENSED PROFESSIONAL ENGINEER — LESLIE E. ROBERTSON — No. 34360 — UNIVERSITY OF THE STATE OF NEW YORK

DESIGNED

DRAWN John Grieves

REVIEWED

13-K2.1-1

SKILLING, HELLE, CHRISTIANSEN, ROBERTSON — Structural & Civil Engineers

PROJECT: THE WORLD TRADE CENTER

TITLE: GIRDER ELEVATION LINE 35

DATE: 11-3-72

REVISIONS

- RELEASE FOR CONSTRUCTION 11-20-72
- 12-11-72
- 2-5-73

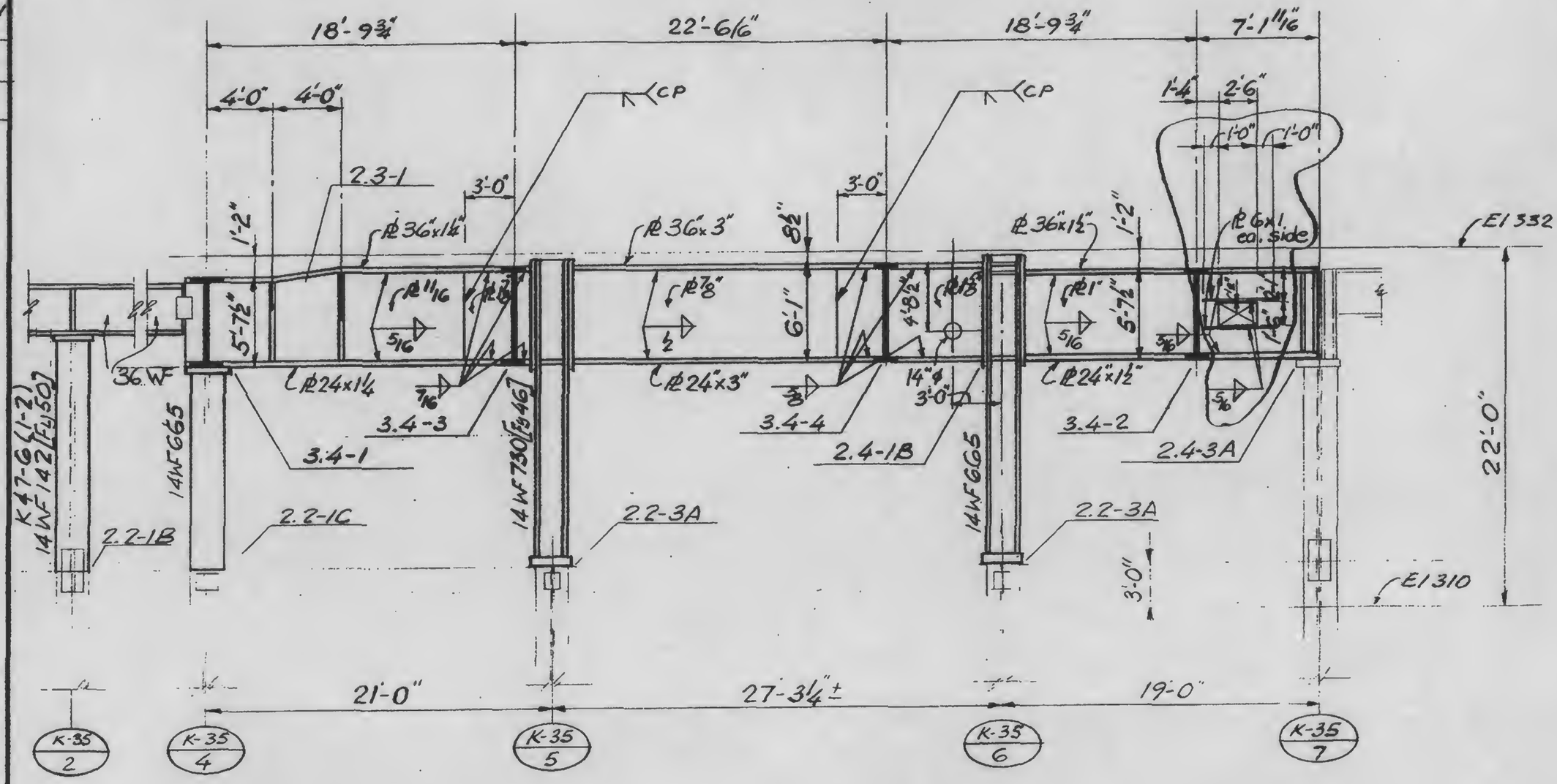

LICENSED PROFESSIONAL ENGINEER — LESLIE E. ROBERTSON — No. 34360 — UNIVERSITY OF THE STATE OF NEW YORK

DESIGNED

DRAWN

REVIEWED

13-K2.1-2

SKILLING HELLE CHRISTIANSEN ROBERTSON — Structural & Civil Engineers

PROJECT: THE WORLD TRADE CENTER | TITLE: GIRDER ELEVATION LINE 37 | DATE: 11-3-72

REVISIONS

RELEASE FOR CONSTRUCTION 11-20-72

12-11-72

2-5-73

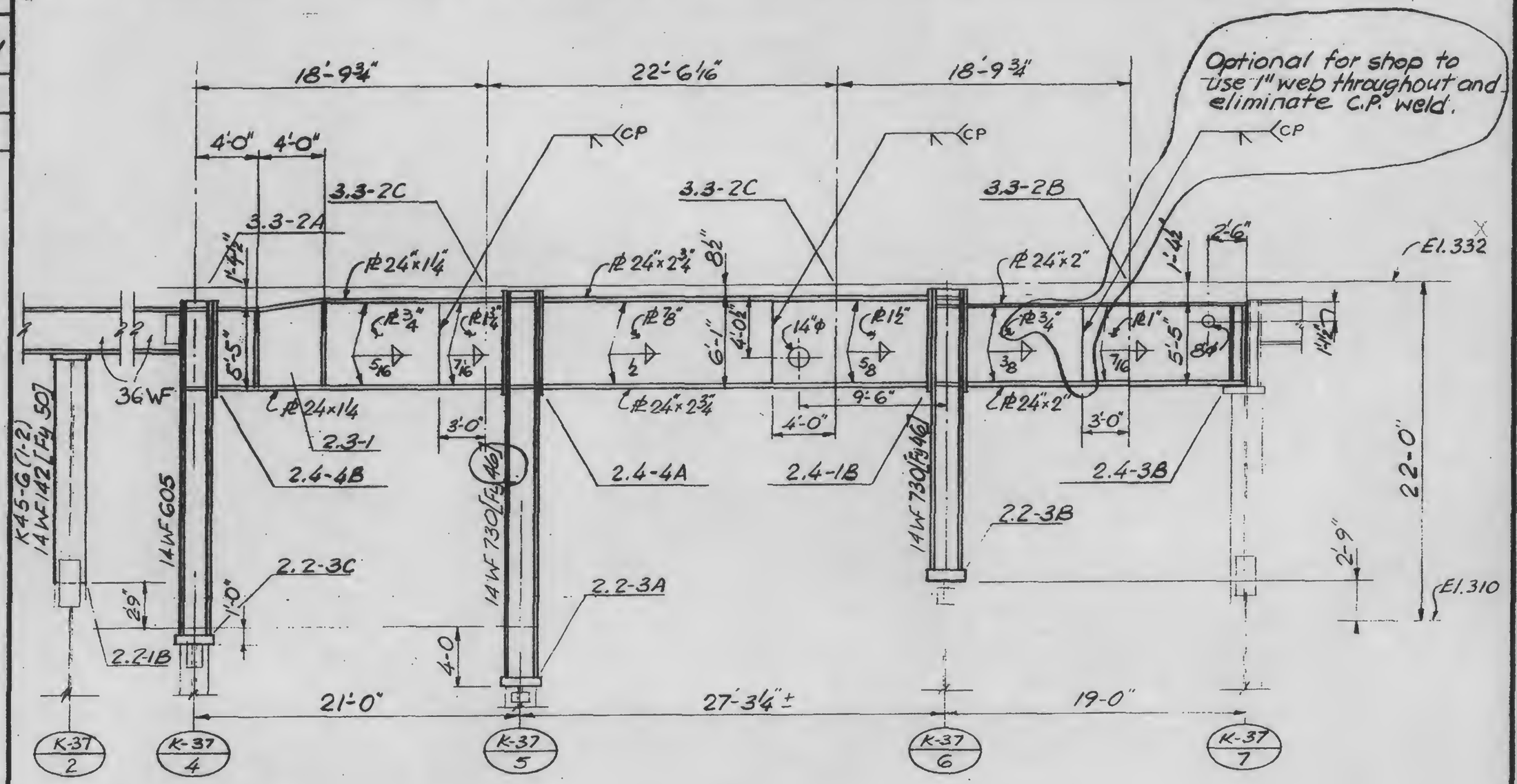

LICENSED PROFESSIONAL ENGINEER — LESLIE E. ROBERTSON — No. 34360 — UNIVERSITY OF THE STATE OF NEW YORK

DESIGNED

DRAWN

REVIEWED

13-K2.1-3

SKILLING, HELLE, CHRISTIANSEN, ROBERTSON — Structural & Civil Engineers

PROJECT: THE WORLD TRADE CENTER

TITLE: GIRDER ELEVATION LINE 41

DATE: 11-3-72

REVISIONS

RELEASE FOR CONSTRUCTION 11-20-72

12-11-72

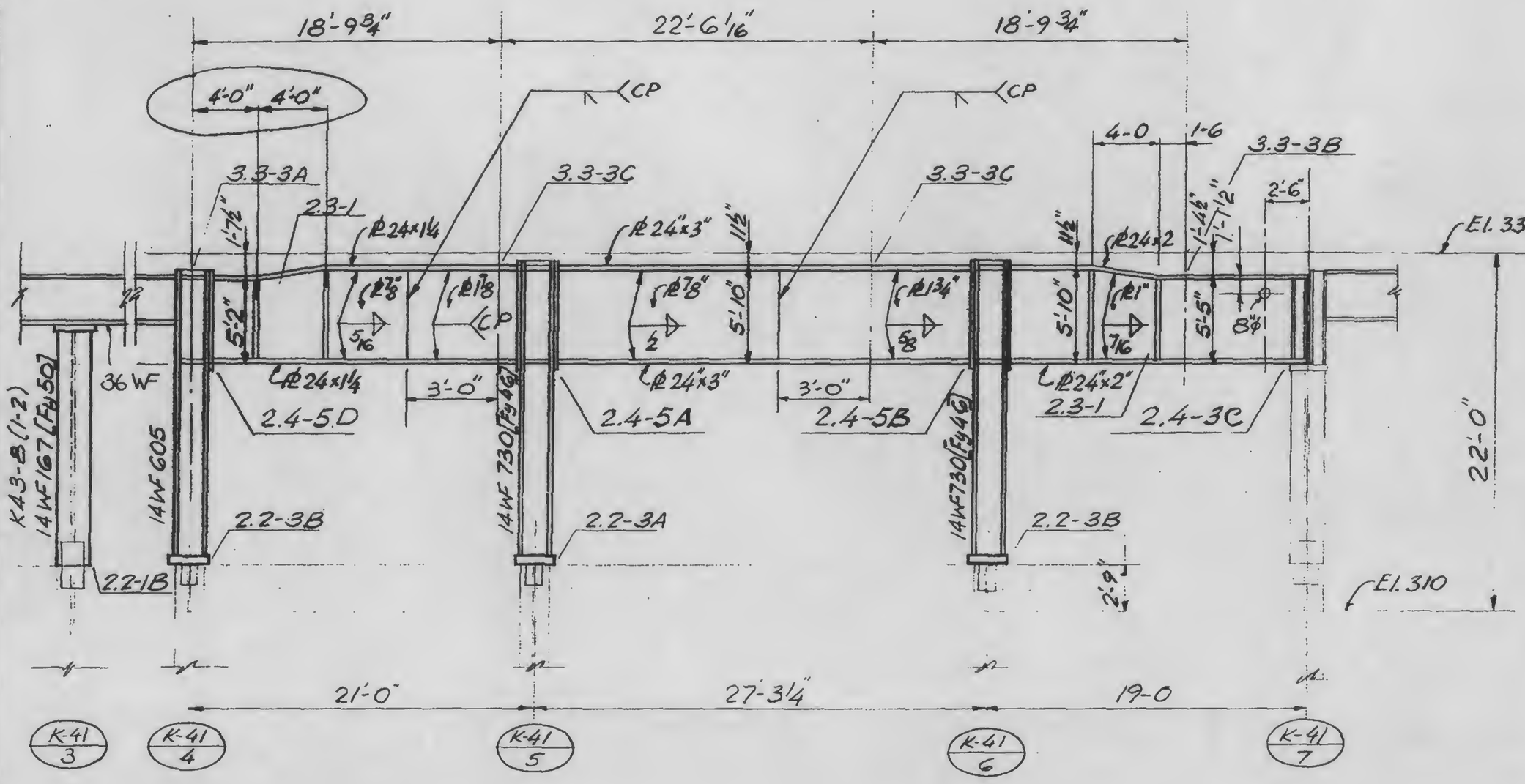

LICENSED PROFESSIONAL ENGINEER — LESLIE E. ROBERTSON — No. 34360 — UNIVERSITY OF THE STATE OF NEW YORK

DESIGNED

DRAWN John Gricinas

REVIEWED

13-K2.1-4

SKILLING, HELLE, CHRISTIANSEN, ROBERTSON — Structural & Civil Engineers

PROJECT: THE WORLD TRADE CENTER | TITLE: GIRDER ELEVATION LINE 43 | DATE: 11-3-72

REVISIONS

RELEASE FOR CONSTRUCTION 11-20-72

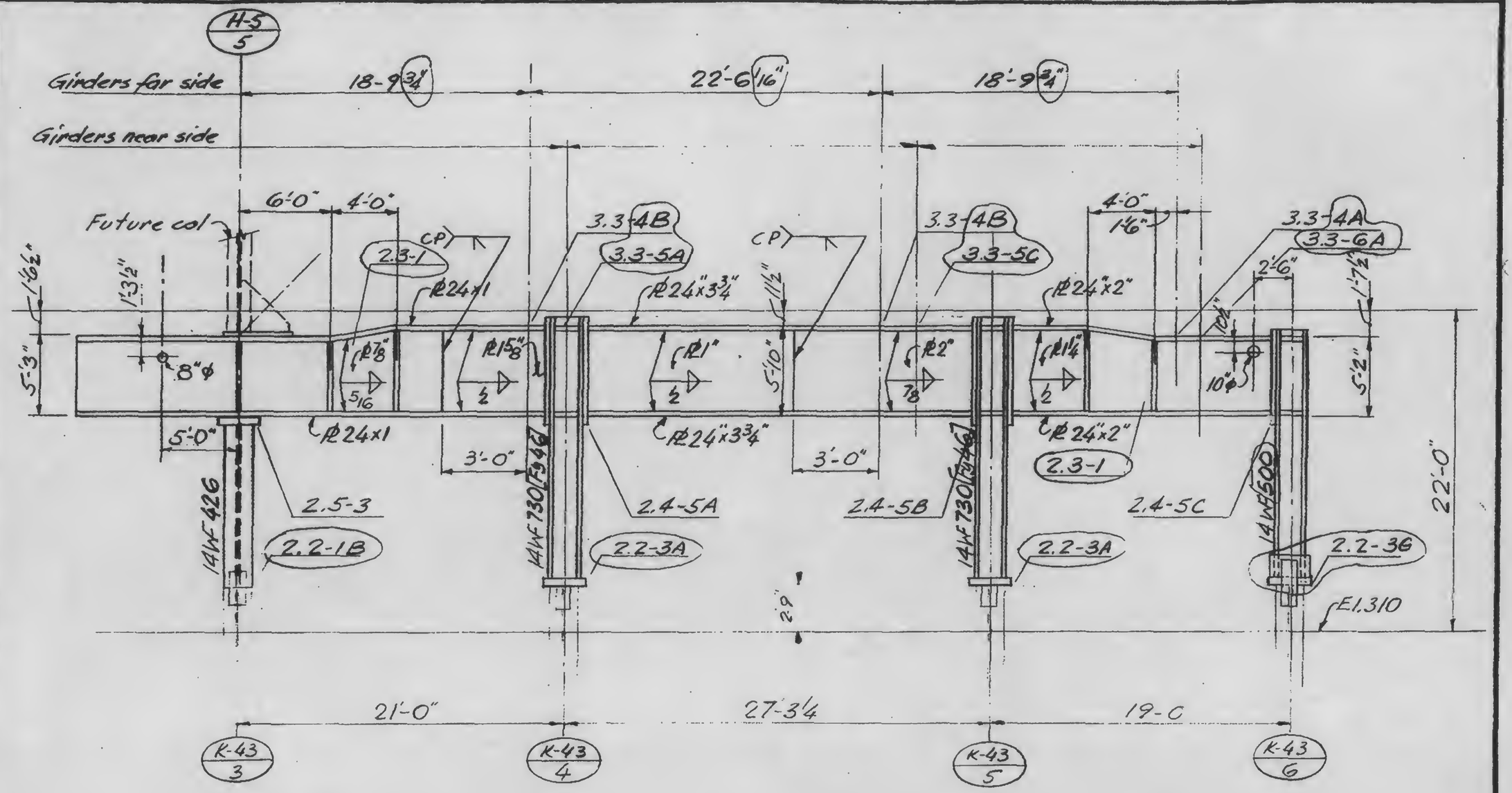

LICENSED PROFESSIONAL ENGINEER — LESLIE E. ROBERTSON — No. 34360 — UNIVERSITY OF THE STATE OF NEW YORK

DESIGNED

DRAWN

REVIEWED

13-KZ.1-5

SKILLING, HELLE, CHRISTIANSEN, ROBERTSON — Structural & Civil Engineers

PROJECT: THE WORLD TRADE CENTER

TITLE: GIRDER ELEVATION LINE 45

DATE: 11-3-72

REVISIONS

- RELEASE FOR CONSTRUCTION 11-28-72
- 12-11-72
- 2-5-73
- 4-20-73

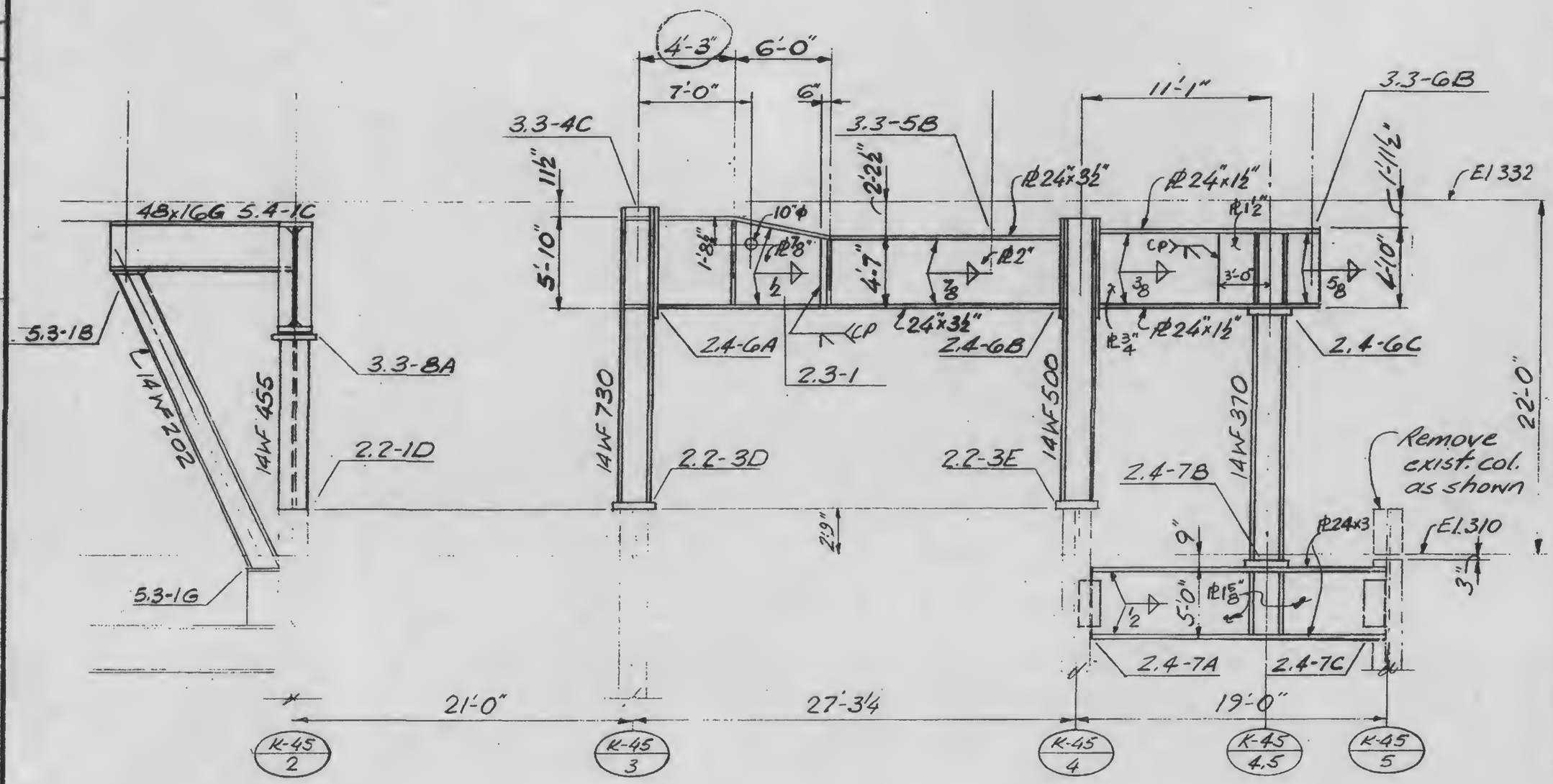

LICENSED PROFESSIONAL ENGINEER — LESLIE E. ROBERTSON — No. 34360 — UNIVERSITY OF THE STATE OF NEW YORK

DESIGNED: K. Chiang

DRAWN: John Sieczy

REVIEWED

13-K2.1-6

SKILLING, HELLE, CHRISTIANSEN, ROBERTSON — Structural & Civil Engineers

PROJECT: THE WORLD TRADE CENTER

TITLE: GIRDER ELEVATION LINE 47

DATE: 11-3-72

REVISIONS

- RELEASE FOR CONSTRUCTION 11-20-72
- 12-11-72
- 2-5-73
- 4-20-73

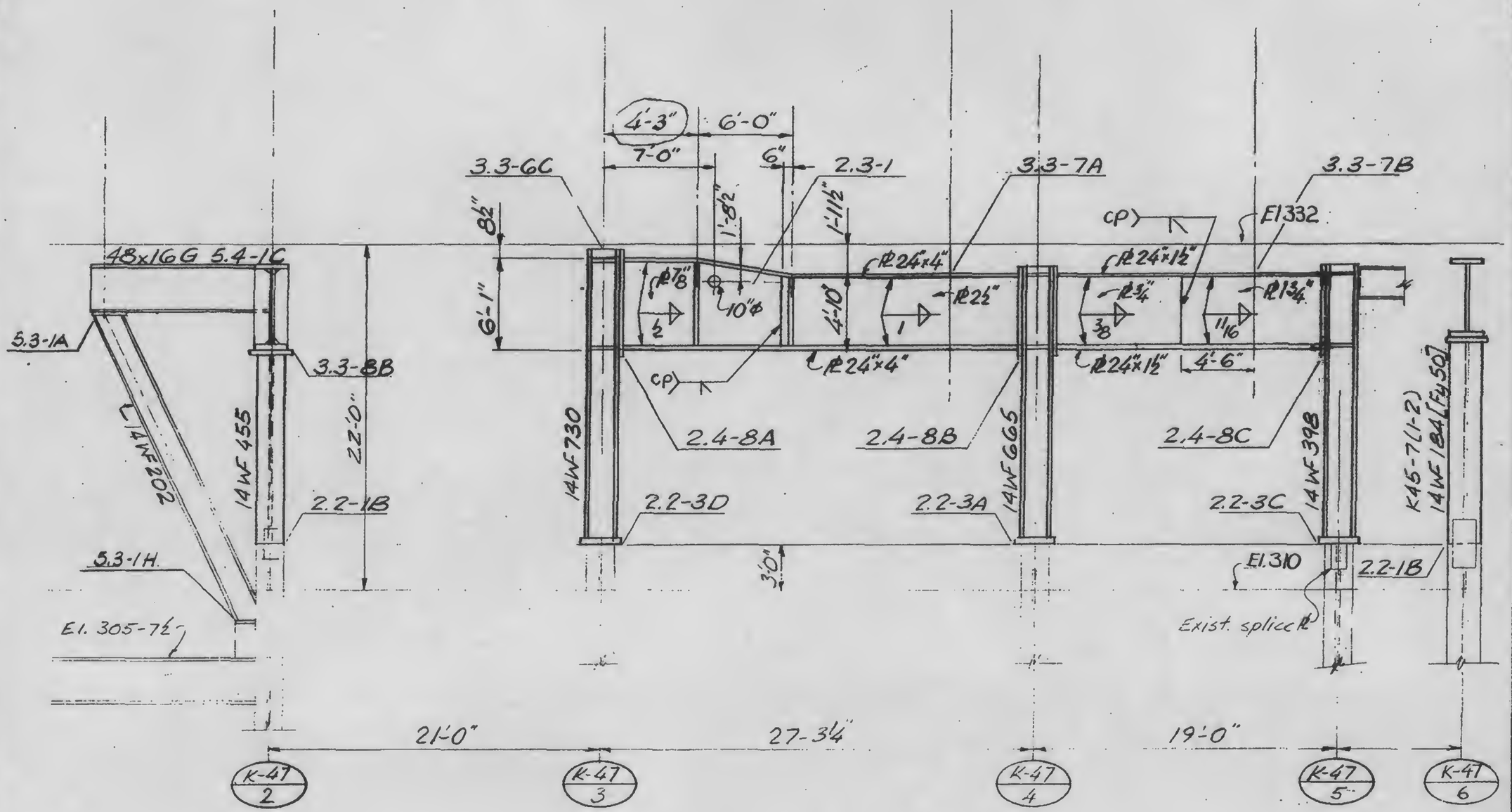

LICENSED PROFESSIONAL ENGINEER — LESLIE E. ROBERTSON — No. 34360 — UNIVERSITY OF THE STATE OF NEW YORK

DESIGNED: J. Chiang

DRAWN: John Gricius

REVIEWED

13-K2.1-7

SKILLING, HELLE, CHRISTIANSEN, ROBERTSON — Structural & Civil Engineers

PROJECT: THE WORLD TRADE CENTER | TITLE: GIRDER ELEVATION | DATE: 11-3-72

REVISIONS

RELEASE FOR CONSTRUCTION 11-20-72

12-11-72

6-4-73

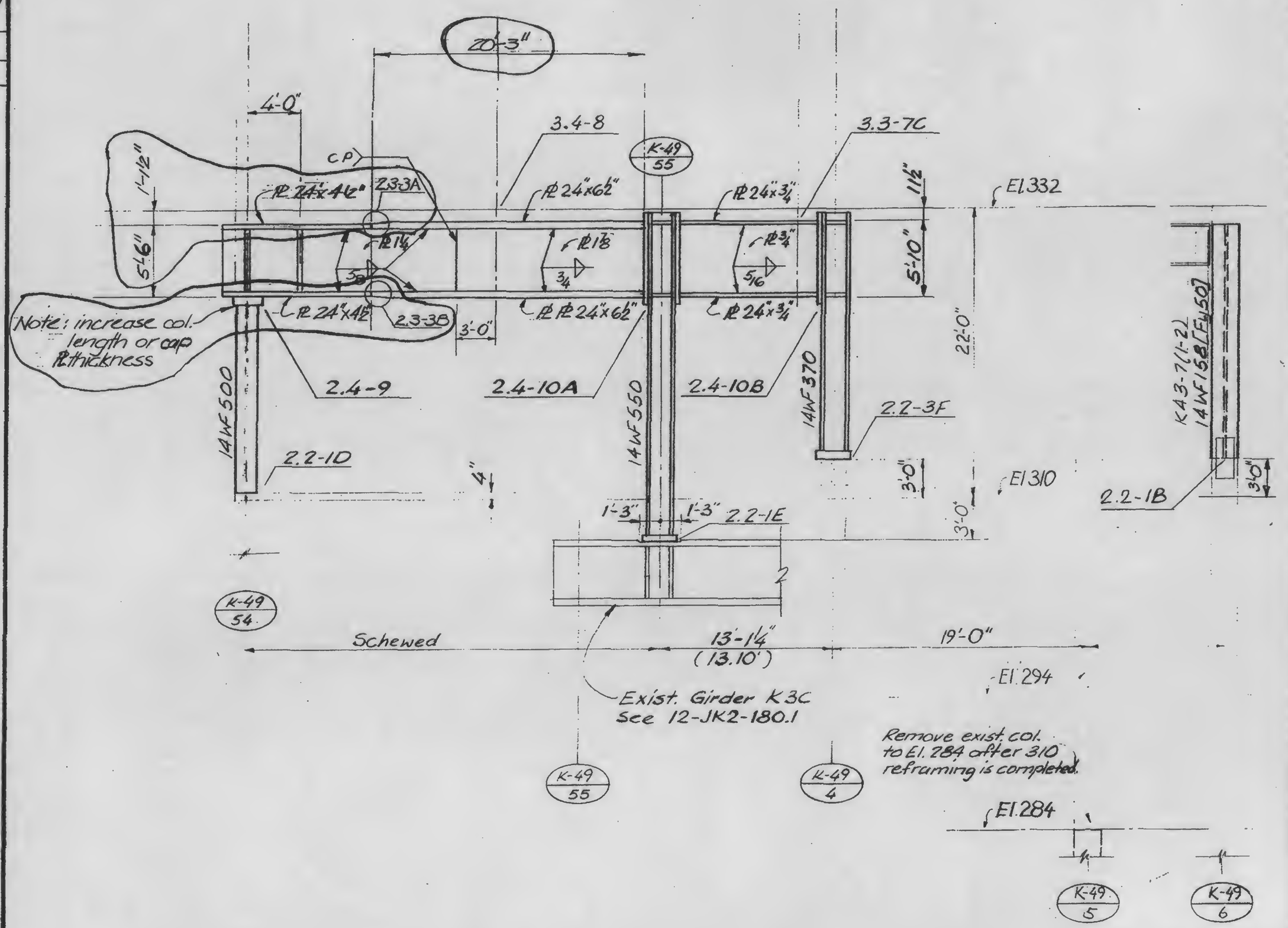

LICENSED PROFESSIONAL ENGINEER — LESLIE E. ROBERTSON — No. 34360 — UNIVERSITY OF THE STATE OF NEW YORK

DESIGNED

DRAWN John Gruciuns

REVIEWED

13-K2.1-8

SKILLING, HELLE, CHRISTIANSEN, ROBERTSON — Structural & Civil Engineers

PROJECT: THE WORLD TRADE CENTER

TITLE: GIRDER ELEVATION LINE 51

DATE: 11-3-72

REVISIONS

RELEASE FOR CONSTRUCTION 11-20-72

12-11-72

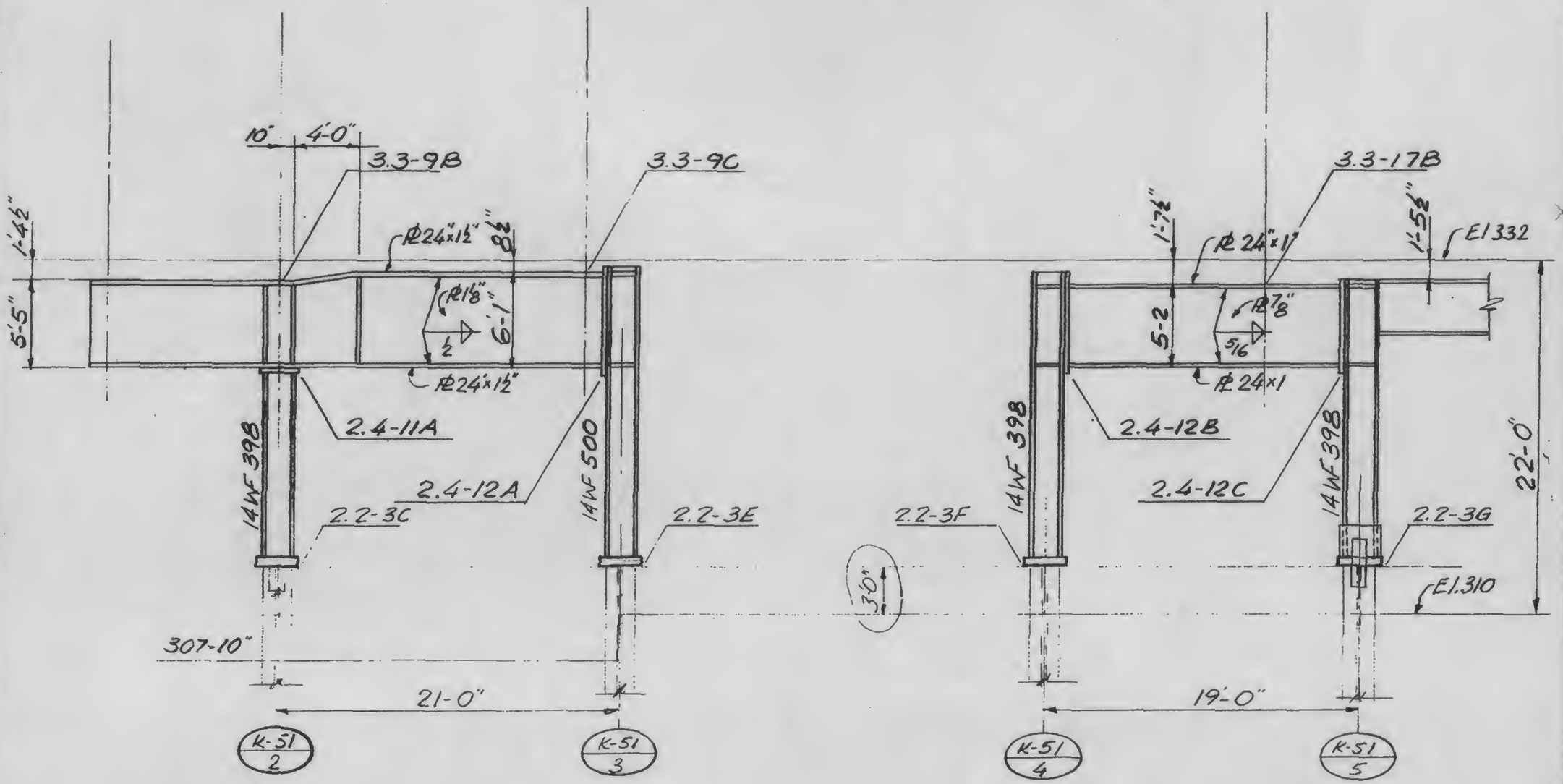

LICENSED PROFESSIONAL ENGINEER — LESLIE E. ROBERTSON — No. 34960 — UNIVERSITY OF THE STATE OF NEW YORK

DESIGNED

DRAWN John Gricius

REVIEWED

13-K2.1-9

SKILLING, HELLE, CHRISTIANSEN, ROBERTSON — Structural & Civil Engineers

PROJECT: THE WORLD TRADE CENTER | TITLE: GIRDER ELEVATION LINE 53 | DATE: 11-3-72

REVISIONS

RELEASE FOR CONSTRUCTION 11-20-72

12-11-72

4-20-73

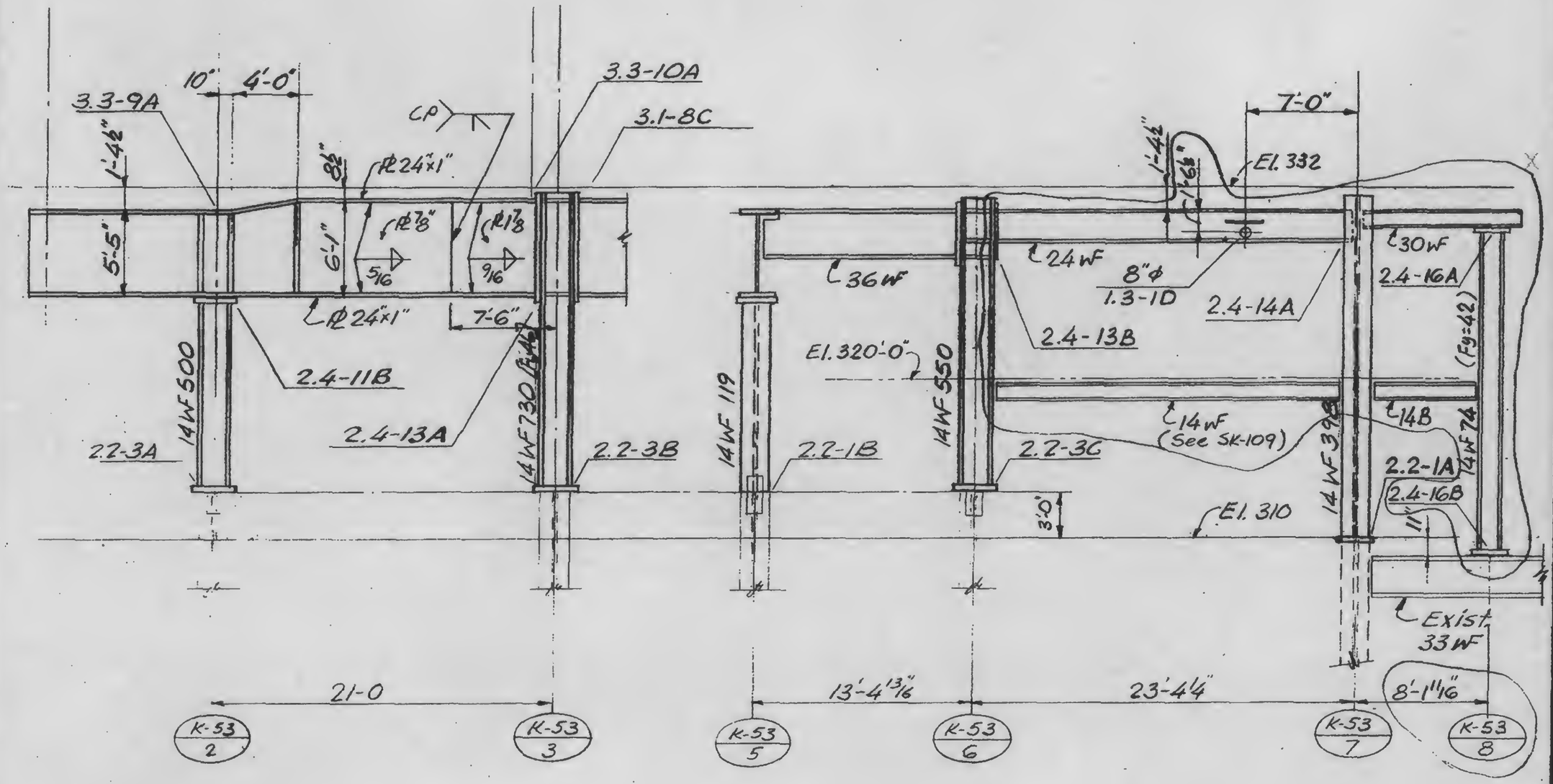

LICENSED PROFESSIONAL ENGINEER — LESLIE E. ROBERTSON — No. 34360 — UNIVERSITY OF THE STATE OF NEW YORK

DESIGNED: K. Chiang

DRAWN: John Grieves

REVIEWED

13-K2.1-10

SKILLING, HELLE, CHRISTIANSEN, ROBERTSON

PROJECT: THE WORLD TRADE CENTER

TITLE: GIRDER ELEVATION LINE 55

DATE: 11-3-72

REVISIONS

RELEASE FOR CONSTRUCTION 11-20-72

12-11-72

4-20-73

8-22-73

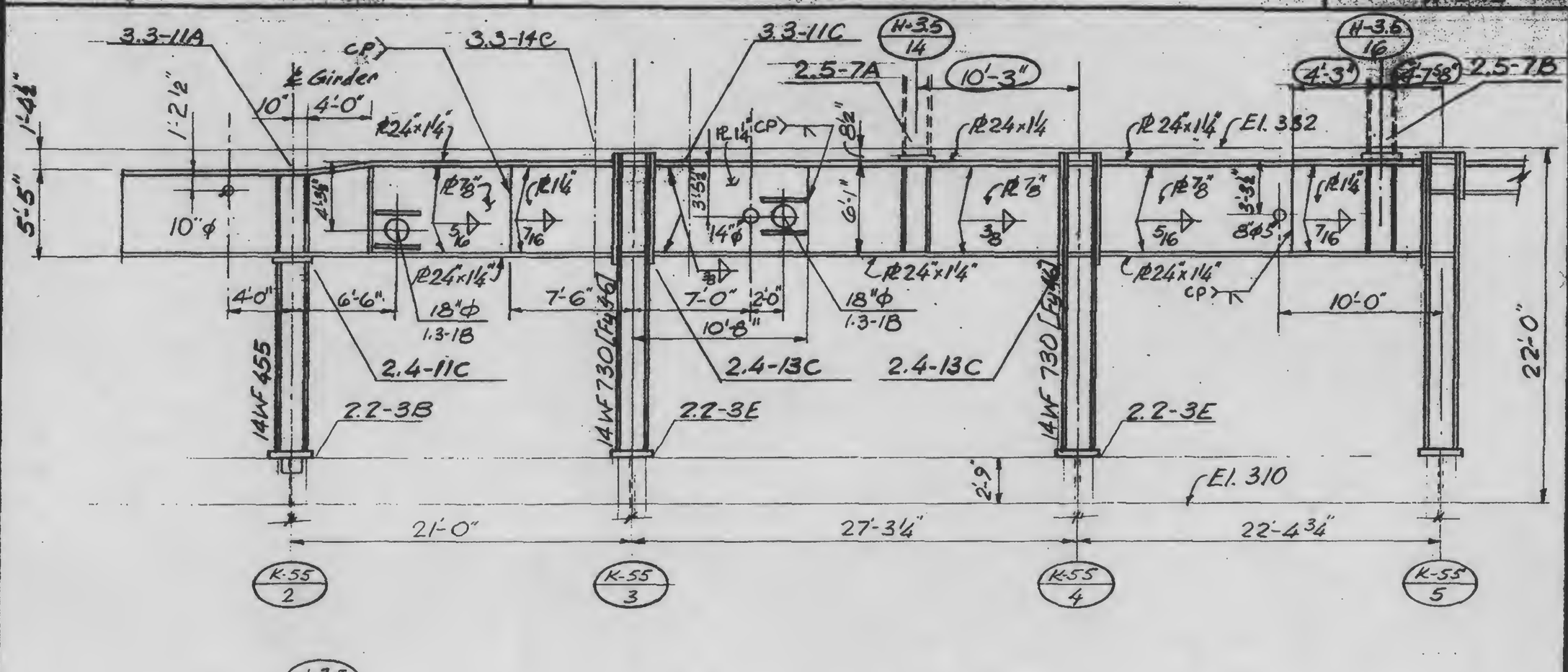

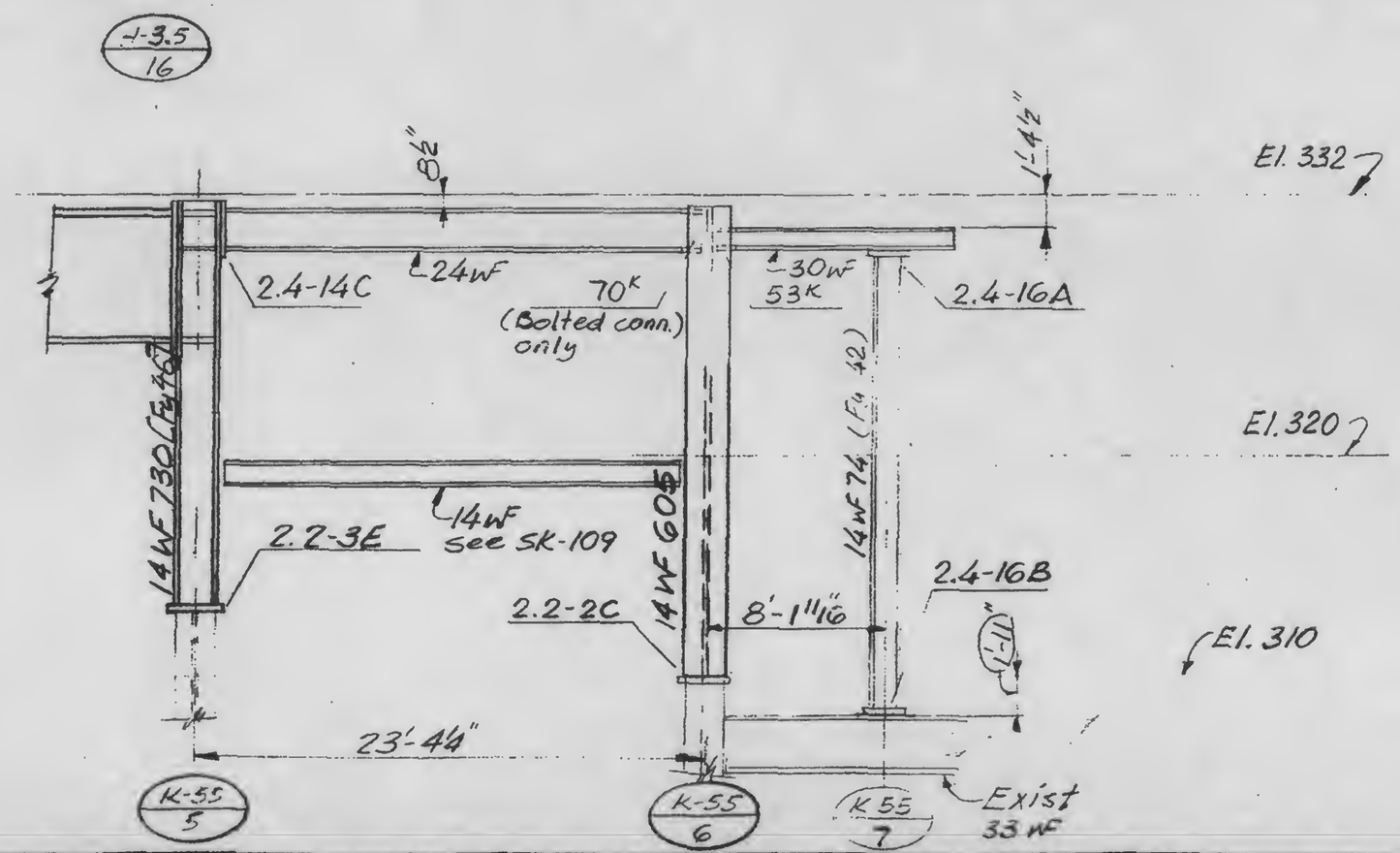

LICENSED PROFESSIONAL ENGINEER
LESLIE E. ROBERTSON
No. 34360
UNIVERSITY OF THE STATE OF NEW YORK

DESIGNED: K. Chiang

DRAWN: John Greene

REVIEWED

13-K2.1-11

WORTHINGTON, SKILLING, HELLE & JACKSON — Civil & Structural Engineers

PROJECT: THE WORLD TRADE CENTER | TITLE: COLUMN SCHEDULE - NEW COLUMNS HOTEL AREA | DATE: 12-23-71

REVISIONS: 11-27-72

	H-P1	H-P2	H-P3	H-P4	H-P5	H-P6	H-P7
3'-0" / El. 332'							
El. 310'	See Dwg. Book 13	3'-0" * See D.B. 13	See D.B. 13	See D.B. 13	See D.B. 13	See D.B. 13	
3'-0" / El. 294'	*		*	*	*	*	
El. 284'	14WF426 Fy36	14WF426 Fy36	14WF193 Fy36	14WF193 Fy36	14WF455 Fy36	14WF455 Fy36	2" 10-JK5-2 A; 14WF264 Fy36 10-JK5-2 A; Shear studs see 10-JK5-2
3'-0" / El. 274'	③	③	③	③	③	③	③ 10-JK5-2 A
El. 264'							10-JK5-2 A
El. 253	14WF500 Fy36	14WF500 Fy36	14WF219 Fy36	14WF219 Fy36	14WF500 Fy36	14WF500 Fy36	14WF264 Fy36
Top of base PL at El. 241'							
Base Plate	60"x6¾"x5'-6" ① Fy36	60"x6¾"x5'-6" ① Fy36	41"x4⅛"x3'-8" ① Fy36	41"x4⅛"x3'-8" ① Fy36	60"x9½"x5'-6" ①② Fy36	60"x6¾"x5'-6" ① Fy36	45"x4⅝"x4'-9" ① Fy36

*. Provide proper splice pls., bolt holes & finished col. top for future columns. See 10-JK2-4.
① See 10-JK3-2
② See Det B 8 JK5 9.5
③ See 12 JK2 4

LICENSED PROFESSIONAL ENGINEER LESLIE E. ROBERTSON No 34360 UNIVERSITY OF THE STATE OF NEW YORK

DESIGNED K. CHIANG
DRAWN A FRANQUI
REVIEWED W P [illegible]

SKILLING, HELLE, CHRISTIANSEN, ROBERTSON — Structural & Civil Engineers

PROJECT: THE WORLD TRADE CENTER

TITLE: GIRDER ELEVATION LINE 57

DATE: 11-3-72

REVISIONS

RELEASE FOR CONSTRUCTION 11-20-72

12-11-72

4-20-73

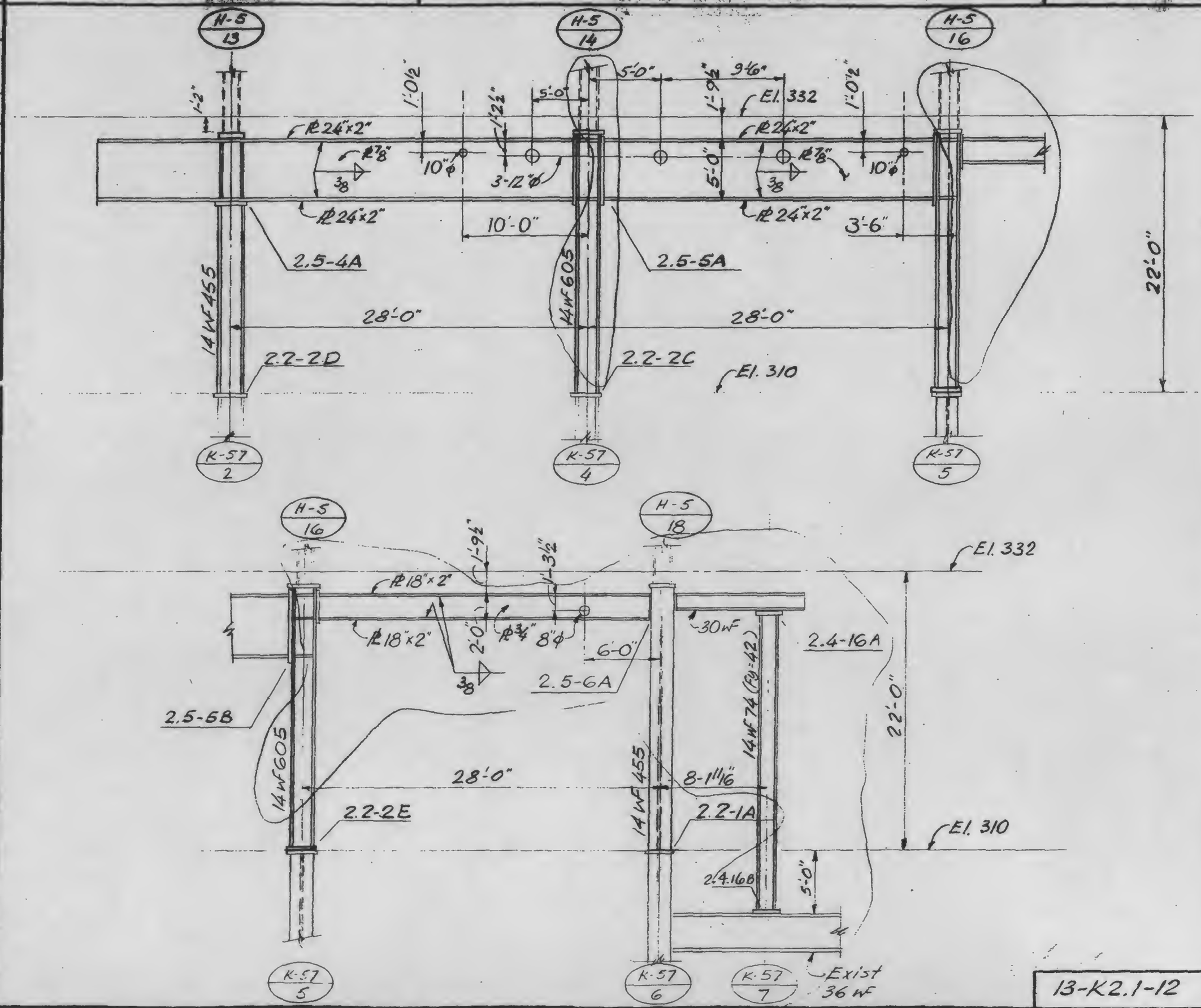

LICENSED PROFESSIONAL ENGINEER — LESLIE E. ROBERTSON — No. 34360 — UNIVERSITY OF THE STATE OF NEW YORK

DESIGNED: K. Chiang

DRAWN: John Grieny

REVIEWED

13-K2.1-12

SKILLING, HELLE, CHRISTIANSEN, ROBERTSON — Structural & Civil Engineers

PROJECT: THE WORLD TRADE CENTER

TITLE: COLUMN ELEVATION

DATE: 11-3-72

REVISIONS

Released for construction 11-20-72

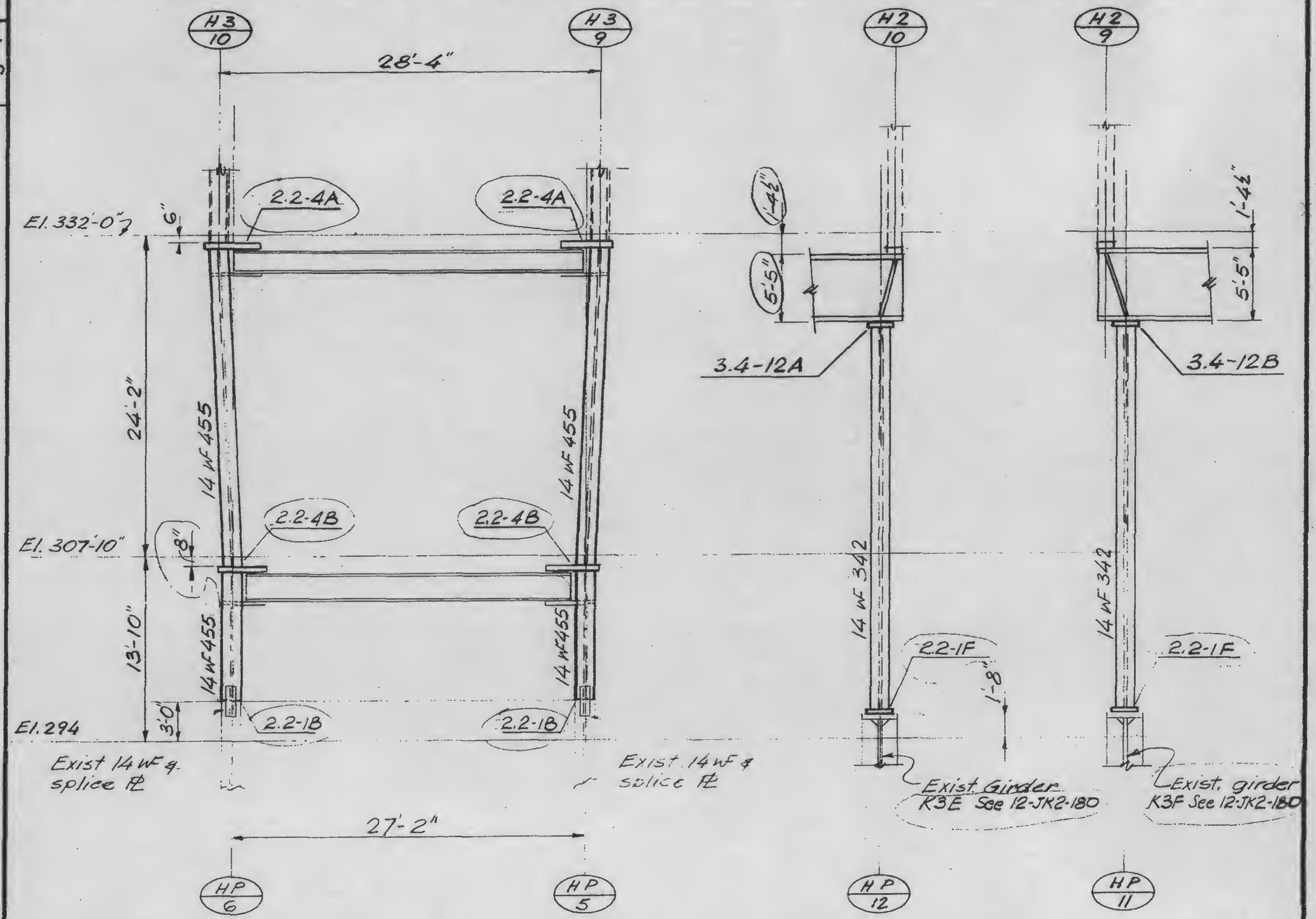

LICENSED PROFESSIONAL ENGINEER — LESLIE E. ROBERTSON — No. 34360 — UNIVERSITY OF THE STATE OF NEW YORK

DESIGNED

DRAWN

REVIEWED

13-K2.1-13

SKILLING, HELLE, CHRISTIANSEN, ROBERTSON

PROJECT THE WORLD TRADE CENTER | TITLE COLUMN ELEVATIONS | DATE 11-2-72

REVISIONS

RELEASE FOR CONSTRUCTION 11-15-72

12-11-72

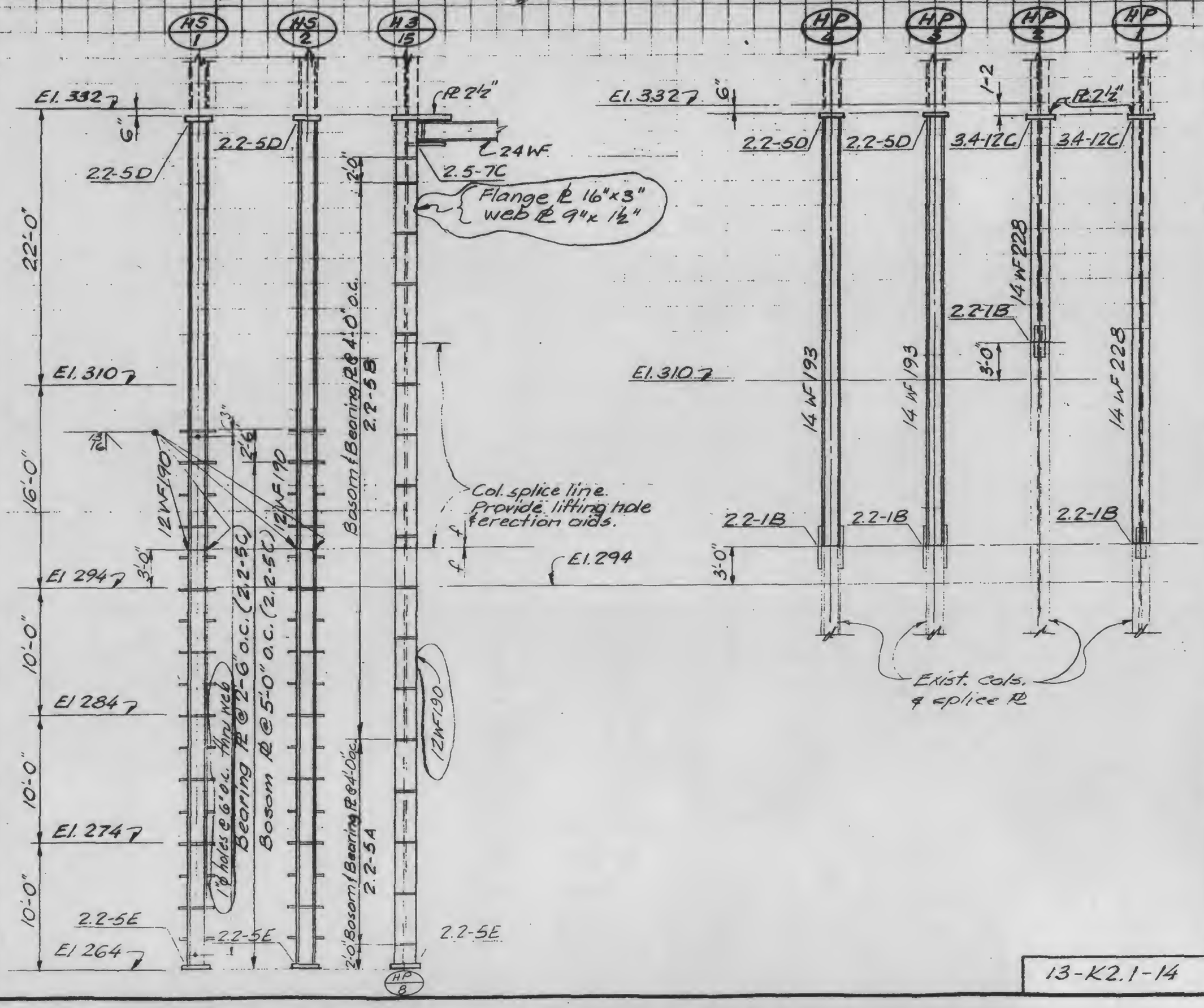

LICENSED PROFESSIONAL ENGINEER
LESLIE E. ROBERTSON
No. 34360
UNIVERSITY OF THE STATE OF NEW YORK

DESIGNED

DRAWN John Gruenes

REVIEWED

13-K2.1-14

SKILLING, HELLE, CHRISTIANSEN, ROBERTSON — Structural & Civil Engineers

PROJECT: THE WORLD TRADE CENTER | TITLE: COLUMN ELEVATION | DATE: 11-3-72

REVISIONS

Release for construction 11-20-72

12-11-72

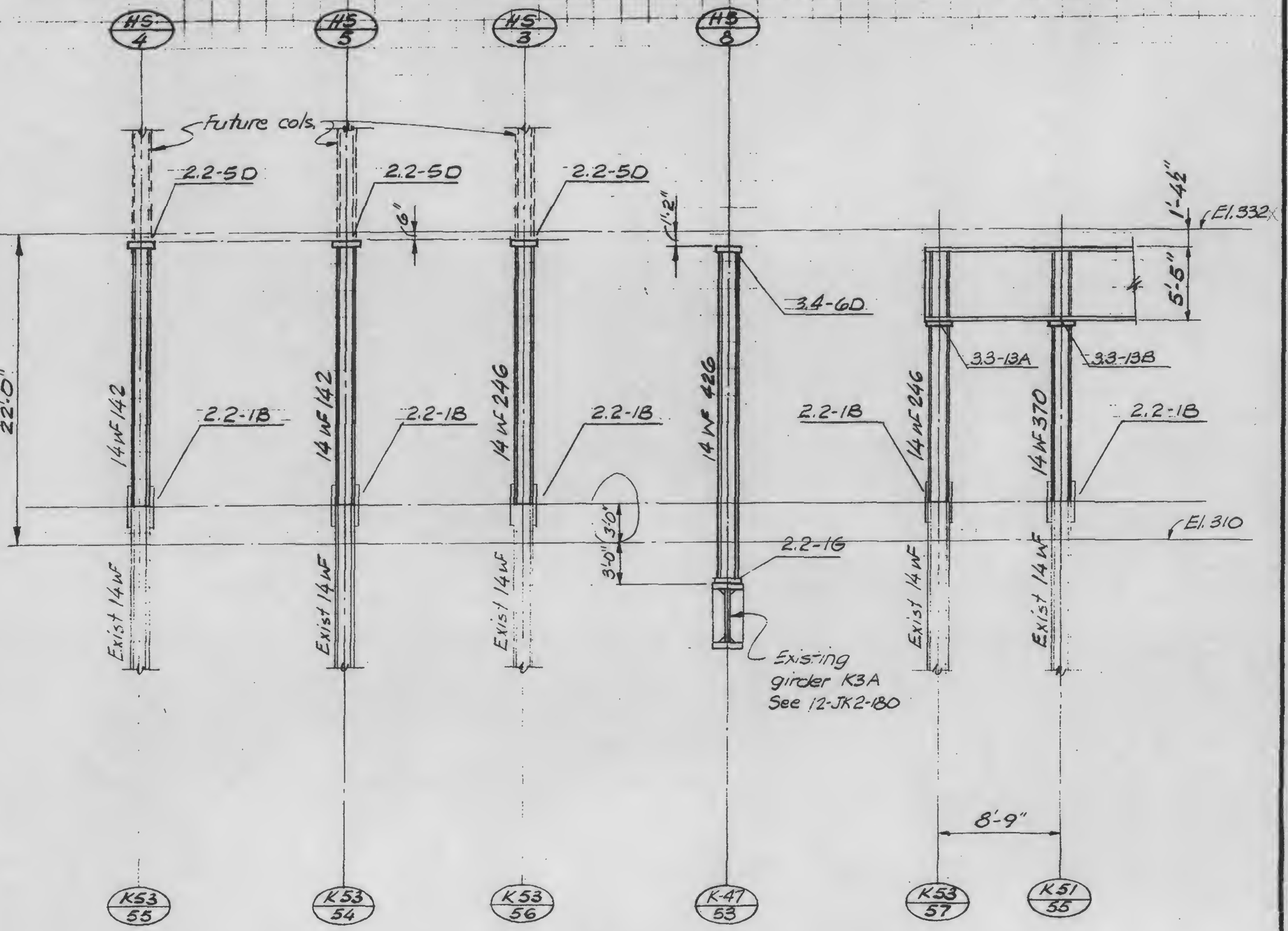

LICENSED PROFESSIONAL ENGINEER — LESLIE E. ROBERTSON — No. 34360 — UNIVERSITY OF THE STATE OF NEW YORK

DESIGNED

DRAWN John Gricius

REVIEWED

13-K2.1-15

SKILLING, HELLE, CHRISTIANSEN, ROBERTSON — Structural & Civil Engineers

PROJECT: THE WORLD TRADE CENTER

TITLE: COLUMN BASE DETAILS

DATE: 11-3-72

REVISIONS

RELEASE FOR CONSTRUCTION 11-20-72

2-5-73

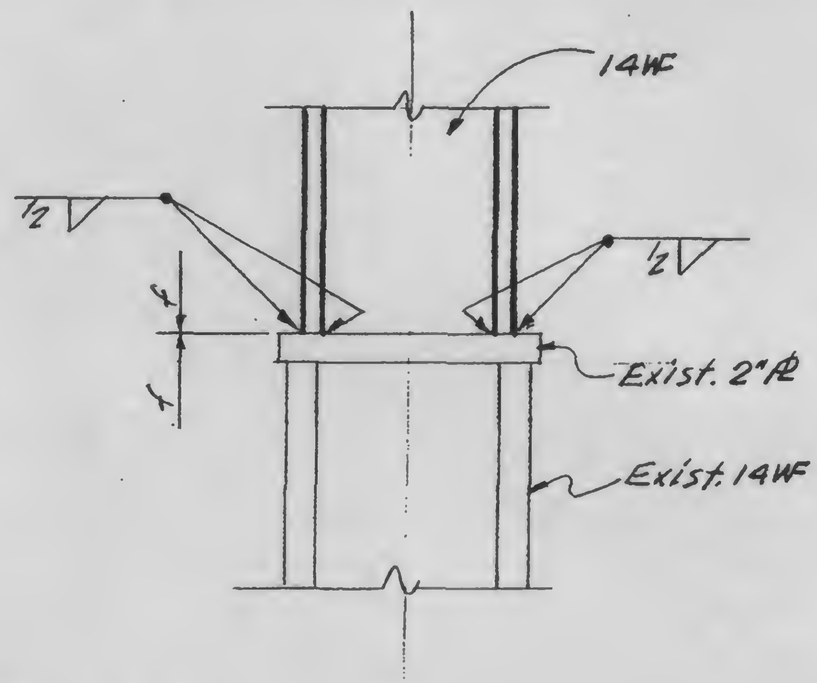

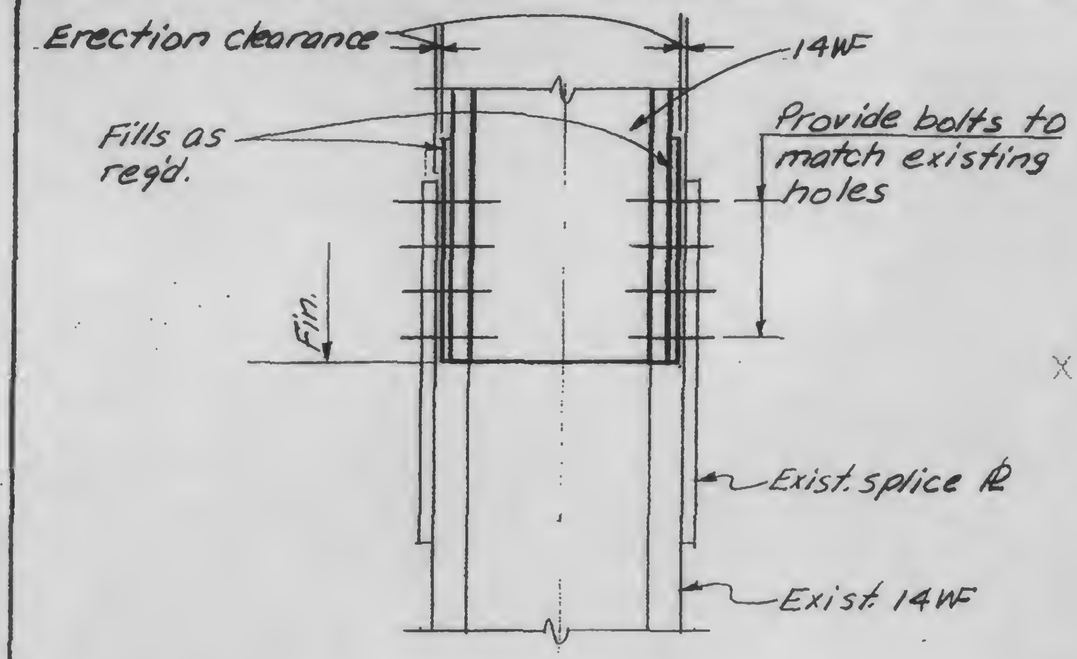

A B

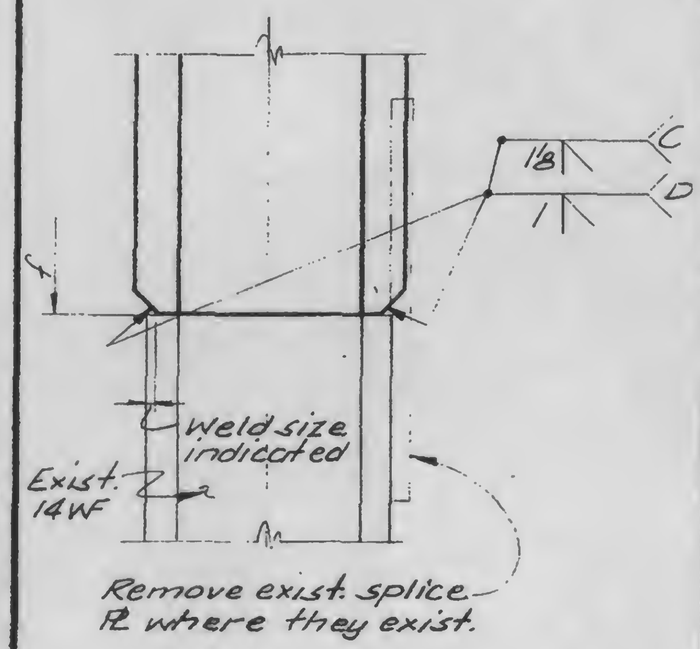

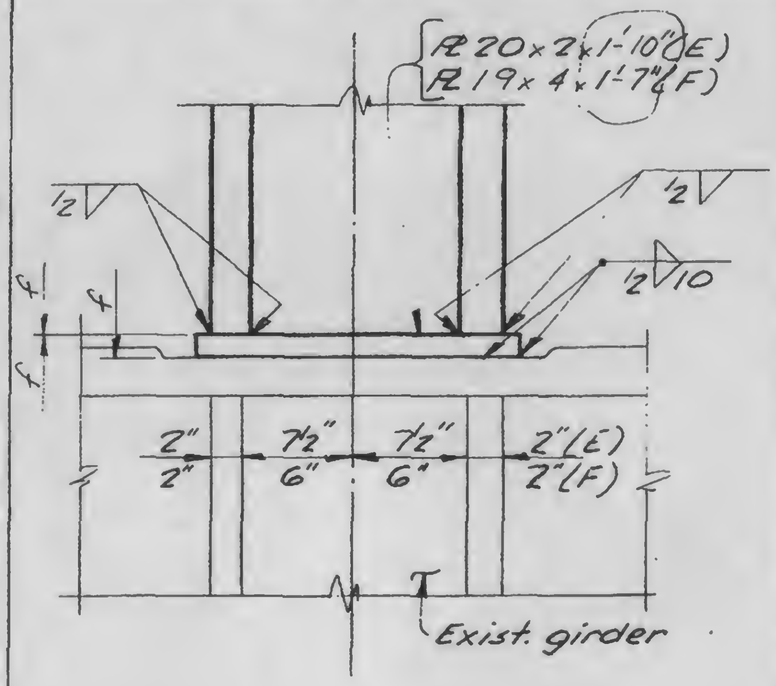

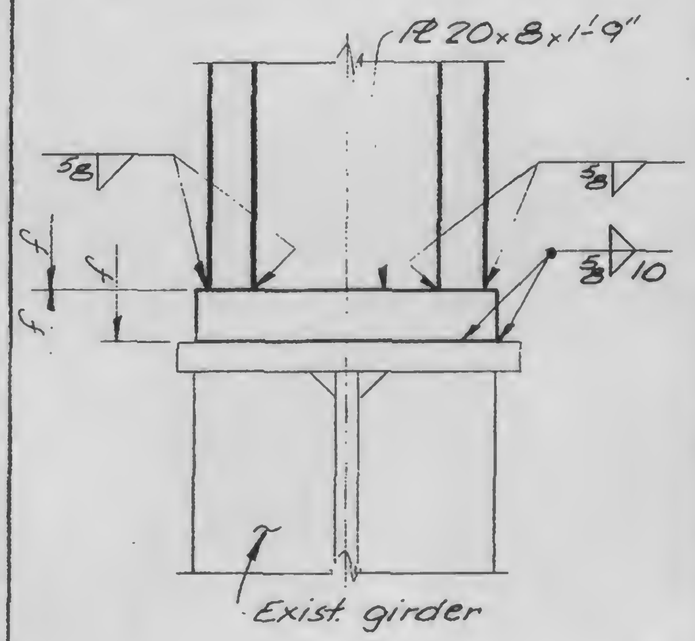

C D E F G

LICENSED PROFESSIONAL ENGINEER — LESLIE E. ROBERTSON — No 34360 — UNIVERSITY OF THE STATE OF NEW YORK

DESIGNED

DRAWN A.L. Frangui

REVIEWED

13-K2.2-1

SKILLING, HELLE, CHRISTIANSEN, ROBERTSON — Structural & Civil Engineers

PROJECT: THE WORLD TRADE CENTER

TITLE: COLUMN BASE DETAILS

DATE: 11-3-72

REVISIONS

RELEASE FOR CONSTRUCTION 11-20-72

2-5-73

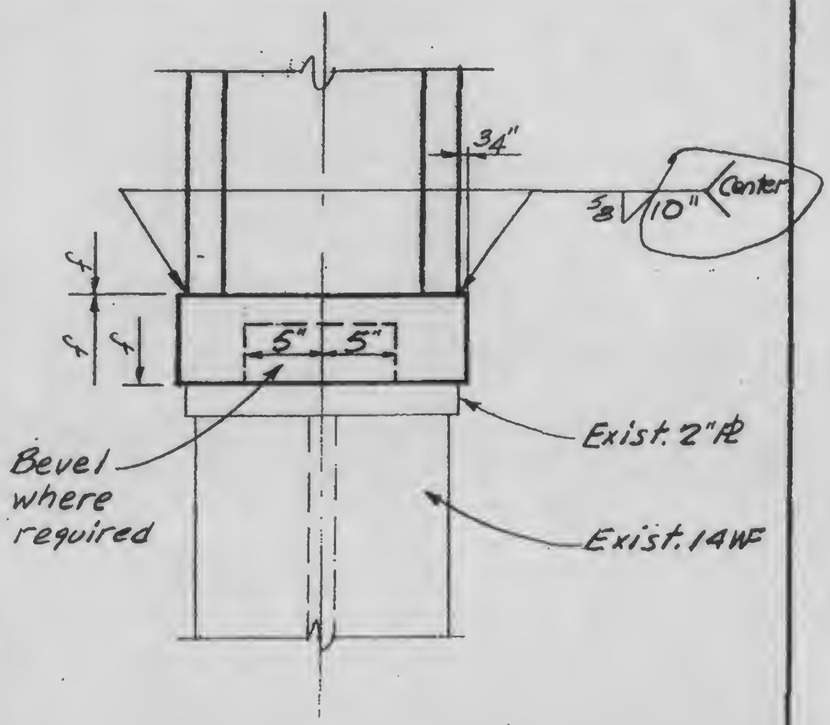

a

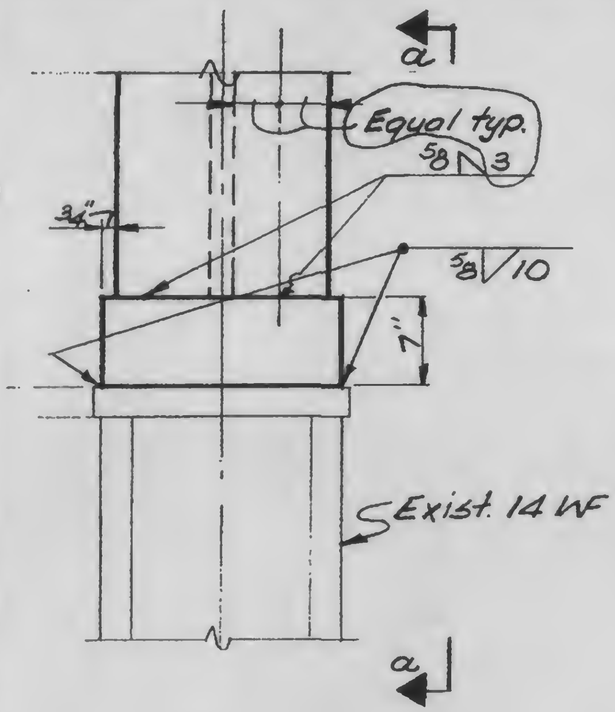

E

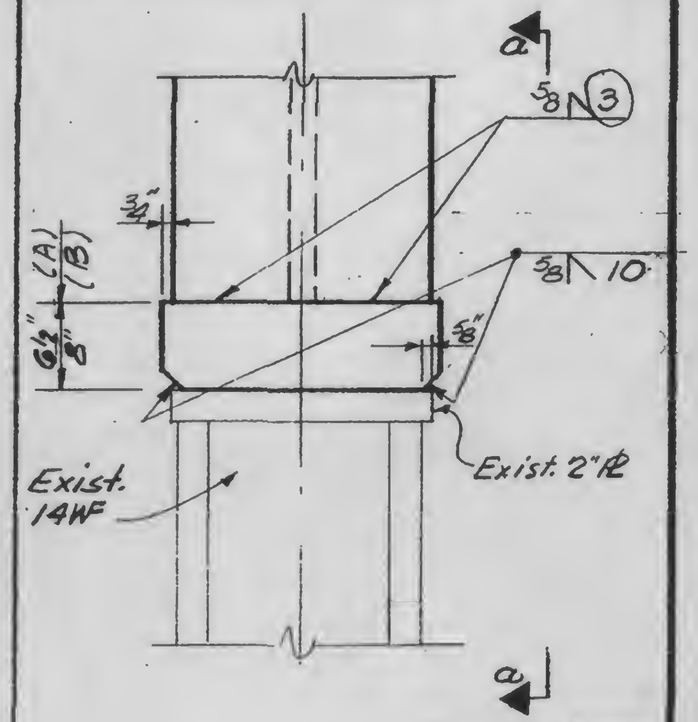

A

B

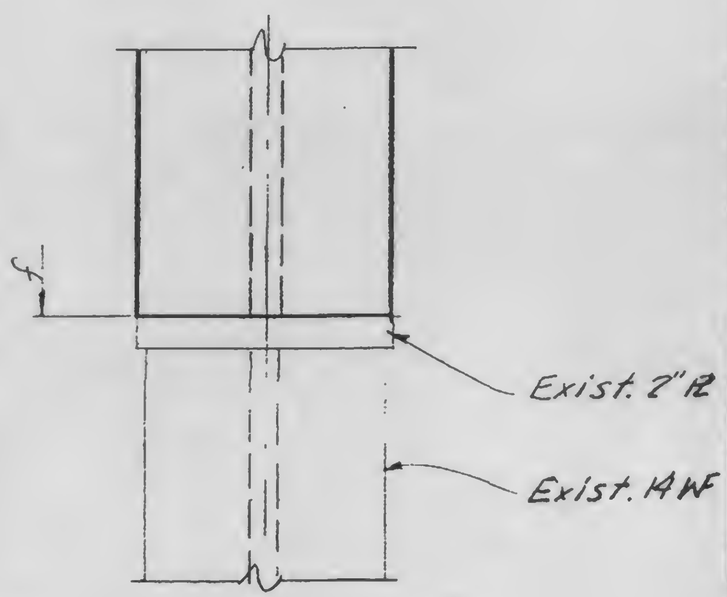

c

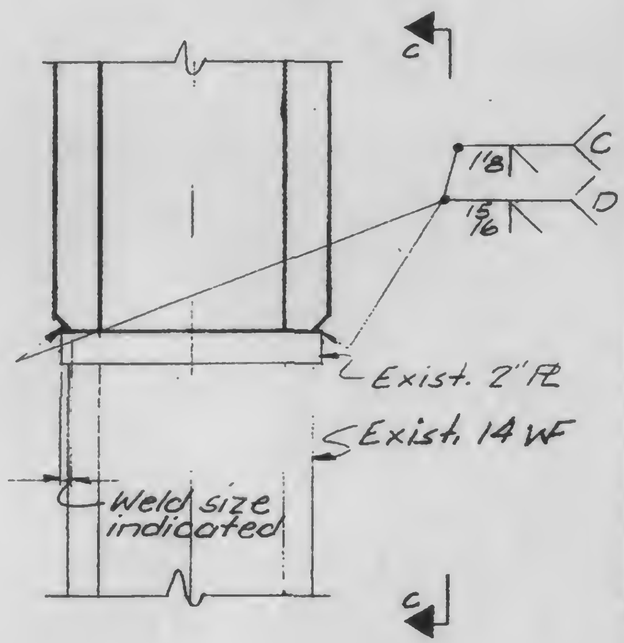

C

D

LICENSED PROFESSIONAL ENGINEER — LESLIE E. ROBERTSON — No 34360 — UNIVERSITY OF THE STATE OF NEW YORK

DESIGNED

DRAWN: A.L. Frongui

REVIEWED

13-K2.2-2

SKILLING, HELLE, CHRISTIANSEN, ROBERTSON — Structural & Civil Engineers

PROJECT: THE WORLD TRADE CENTER

TITLE: COLUMN BASE DETAILS

DATE: 11-3-72

REVISIONS

RELEASE FOR CONSTRUCTION 11-20-72

2-5-73

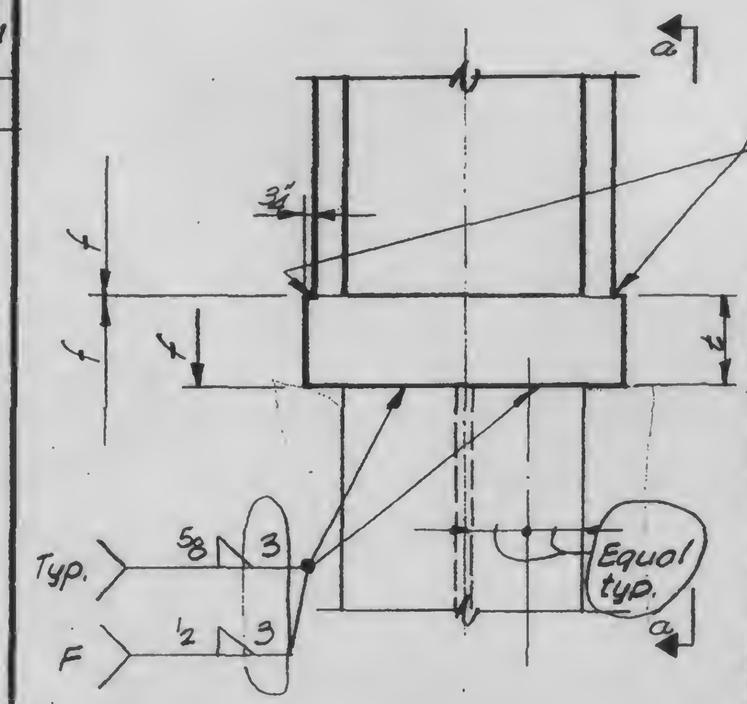

Width W	Thick t	Det No.
2'-0"	8"	A
2'-0"	7"	B
1'-10"	6½"	C
2'-0"	9"	D
2'-0"	6½"	E
2'-0"	5"	F

a

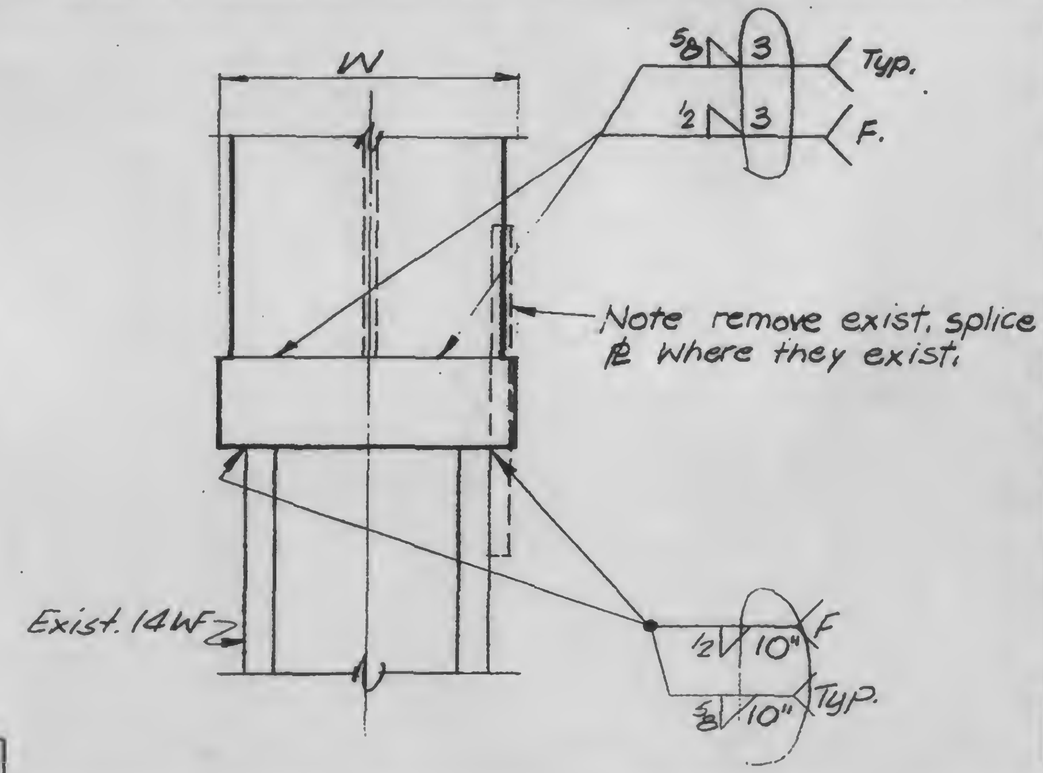

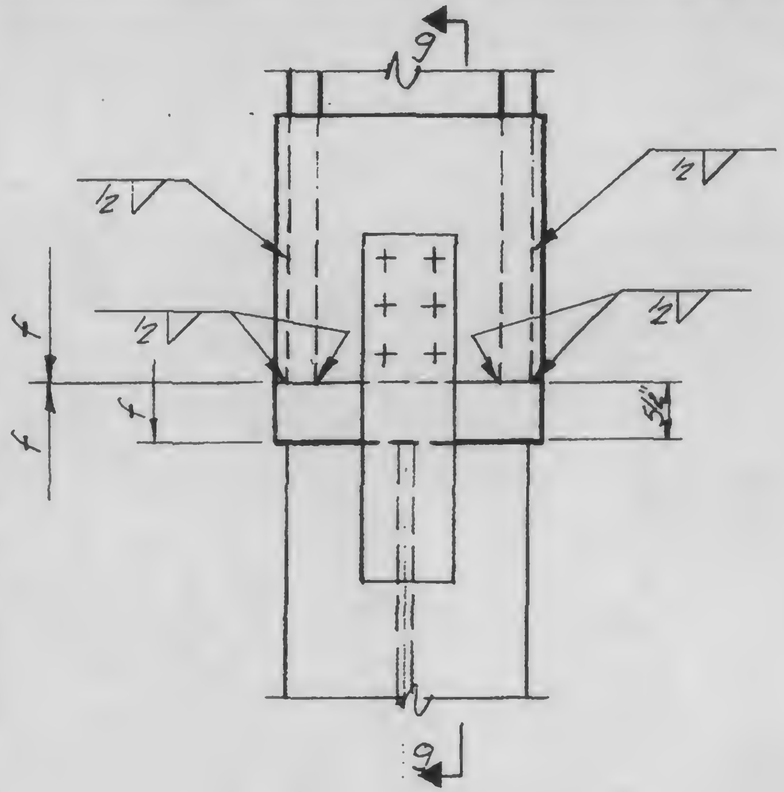

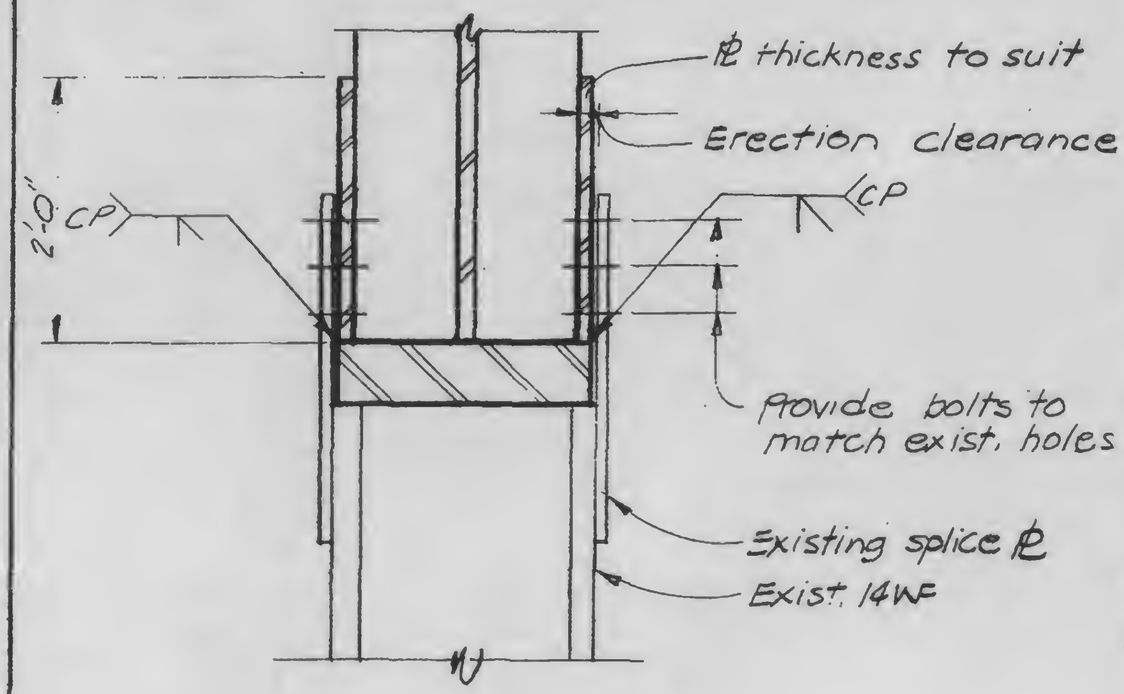

LICENSED PROFESSIONAL ENGINEER — LESLIE E. ROBERTSON — No. 34360 — UNIVERSITY OF THE STATE OF NEW YORK

DESIGNED

DRAWN

REVIEWED

G | 9

13-K2.2.3

SKILLING, HELLE, CHRISTIANSEN, ROBERTSON — Structural & Civil Engineers

PROJECT: THE WORLD TRADE CENTER | TITLE: COLUMN DETAILS | DATE: 11-20-72

REVISIONS

RELEASE FOR CONSTRUCTION 11-20-72

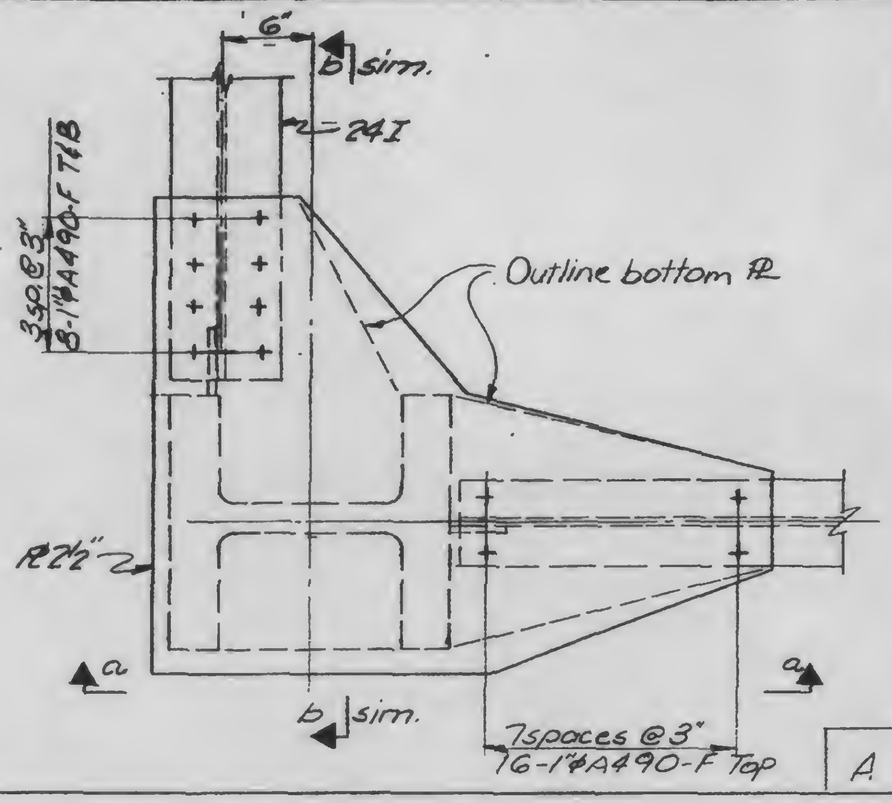

A | a

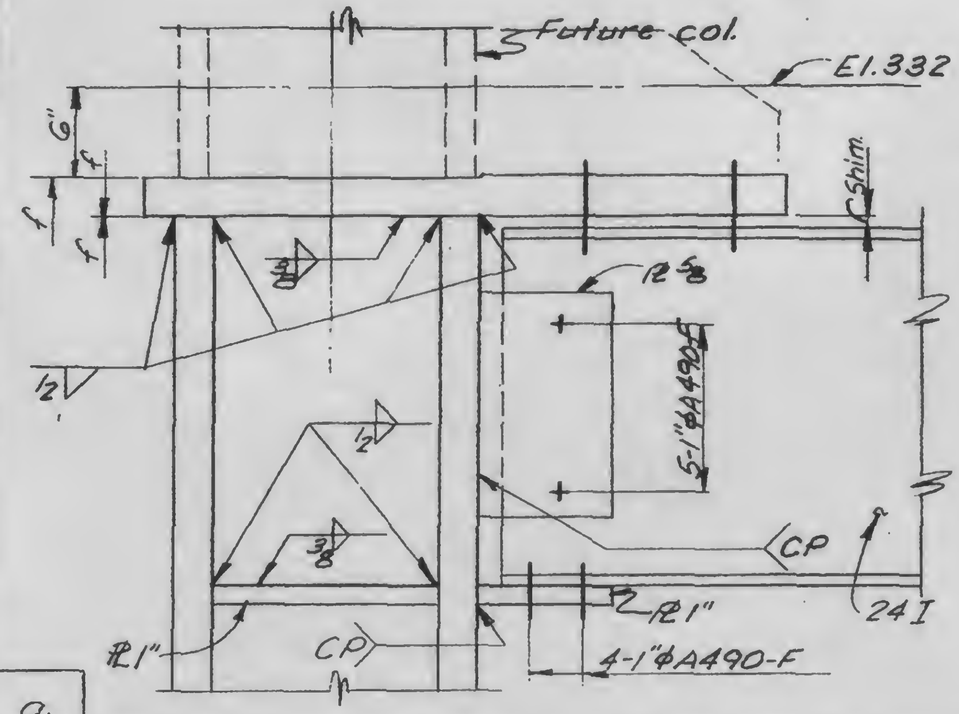

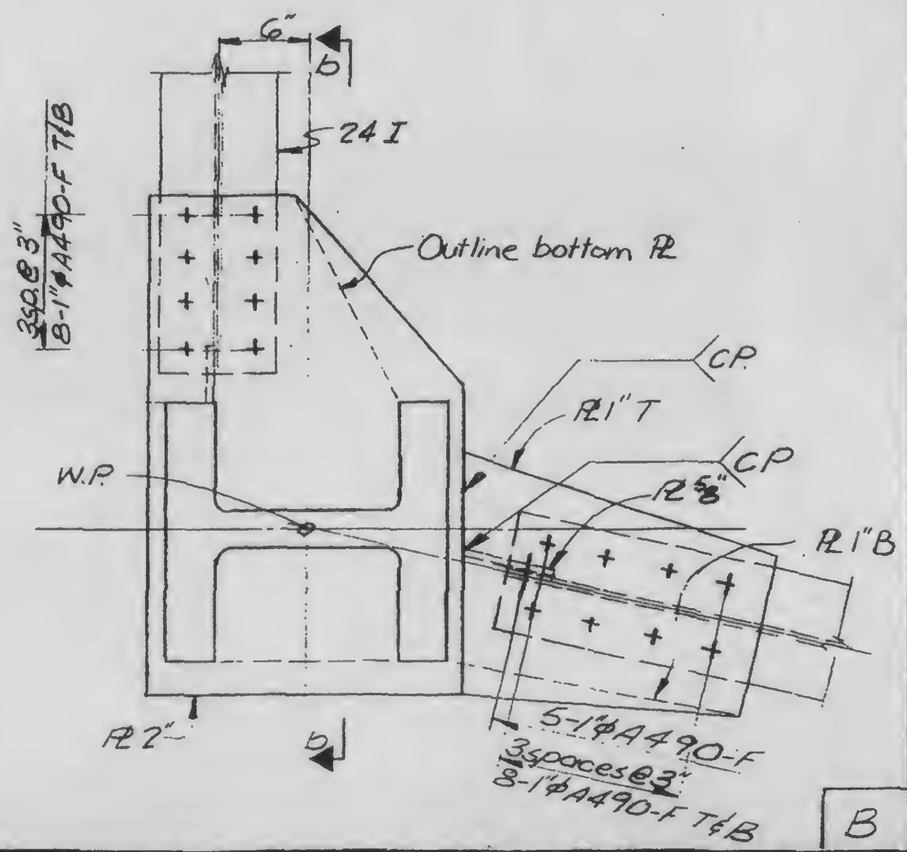

B | b

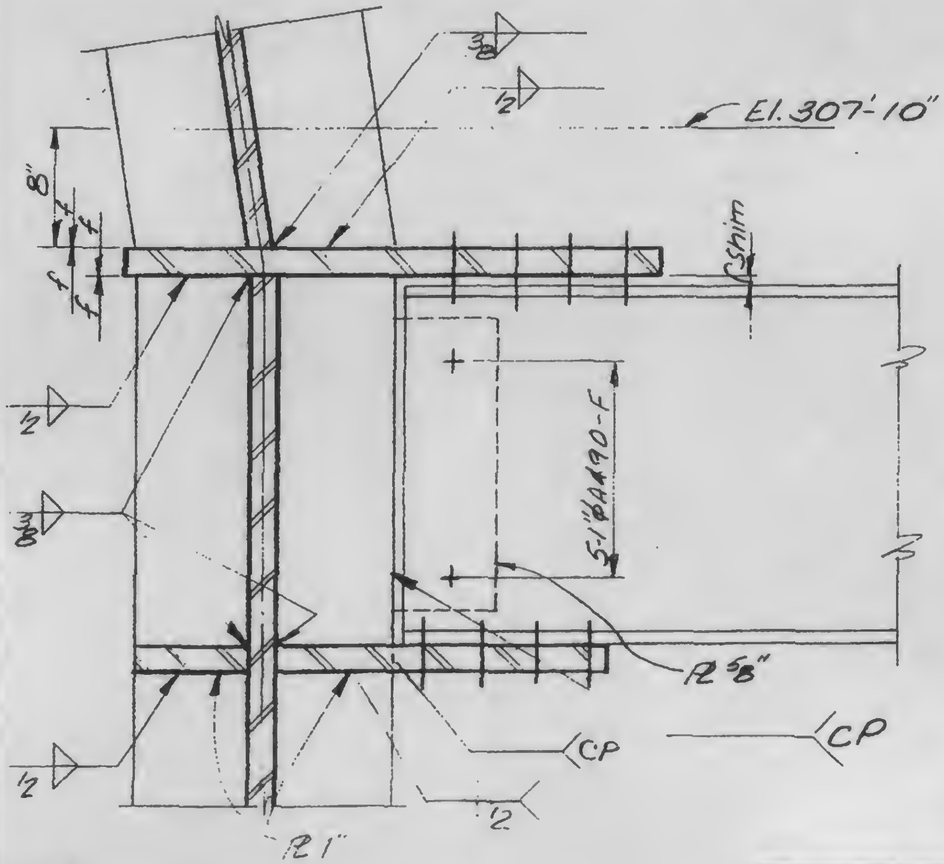

13-K2.2-4

LICENSED PROFESSIONAL ENGINEER — LESLIE E. ROBERTSON — No. 34360 — UNIVERSITY OF THE STATE OF NEW YORK

DESIGNED

DRAWN T.R.

REVIEWED

SKILLING, HELLE, CHRISTIANSEN, ROBERTSON — Structural & Civil Engineers

PROJECT: THE WORLD TRADE CENTER | TITLE: COLUMN BASE DETAILS | DATE: 11-3-72

REVISIONS

RELEASE FOR CONSTRUCTION 11-15-72

12-11-72

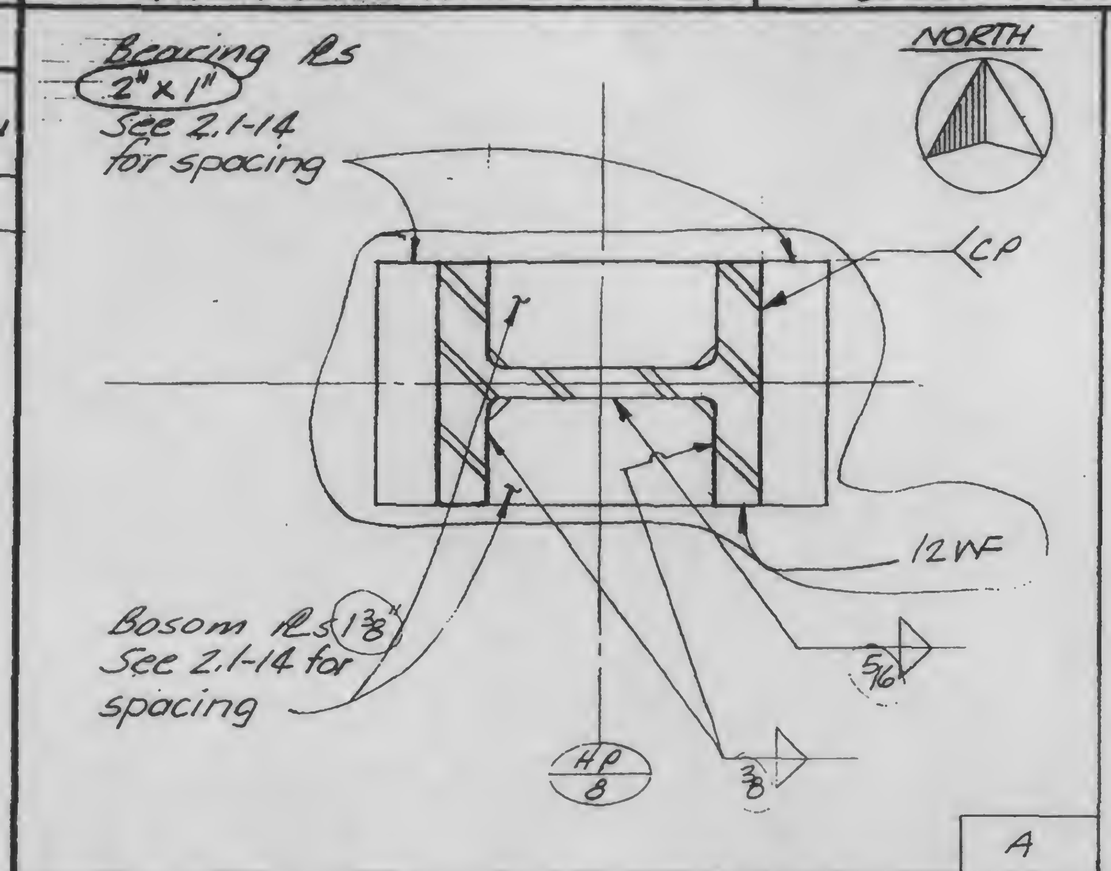

A

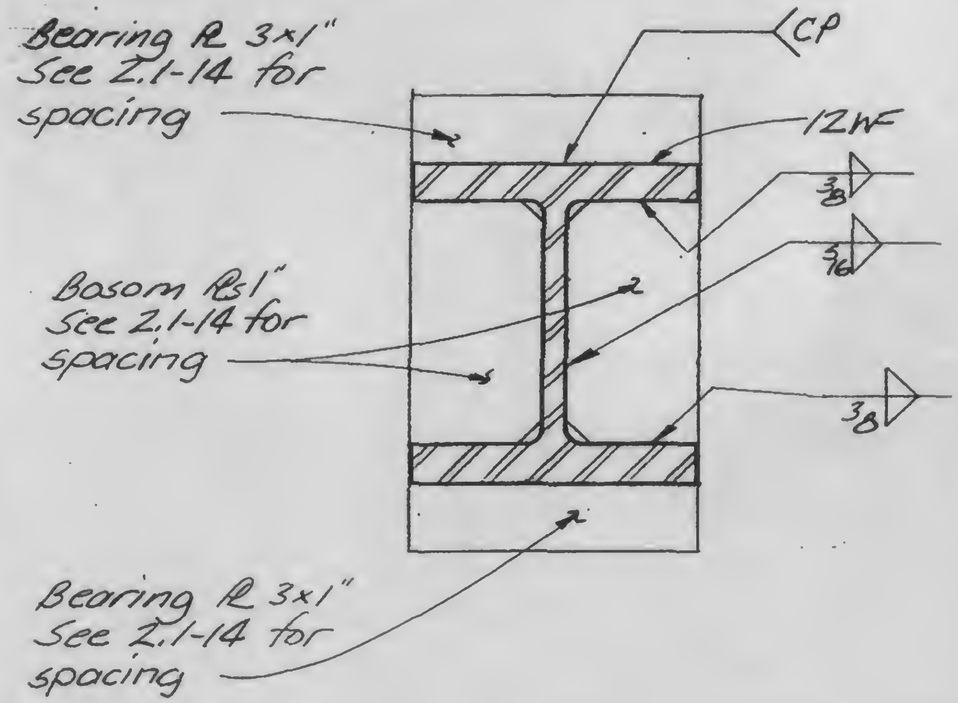

C

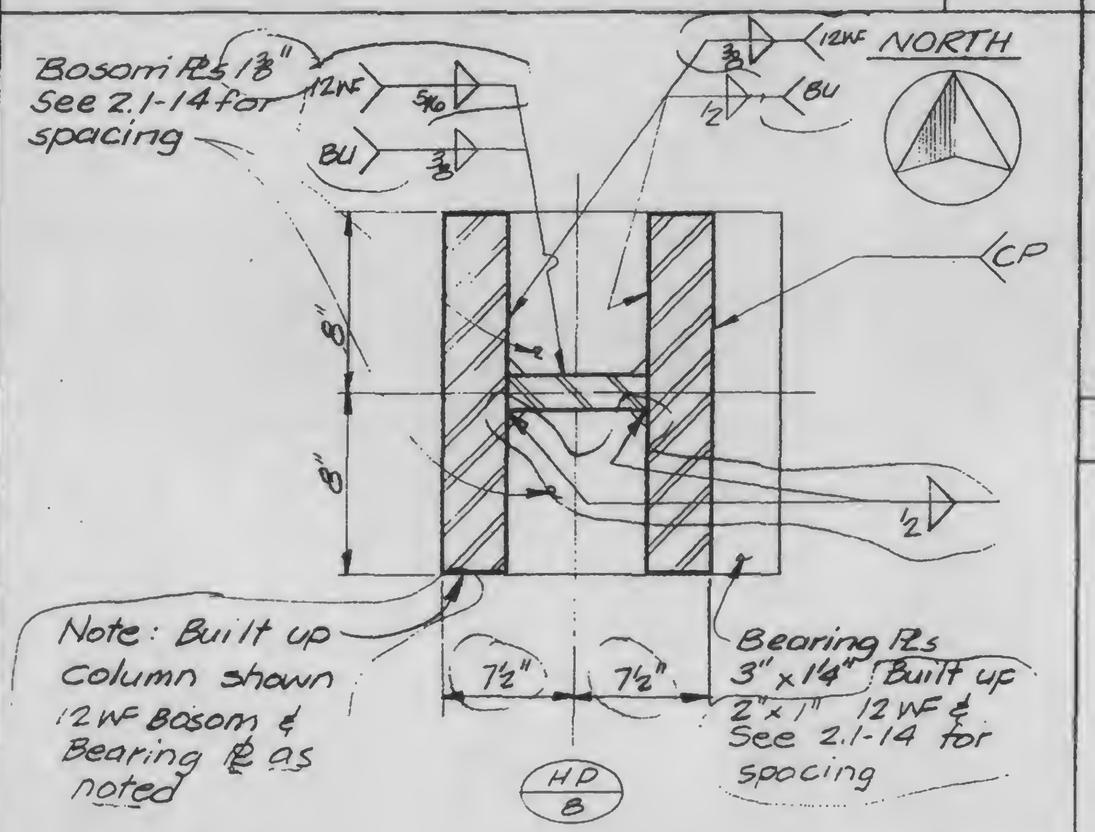

B

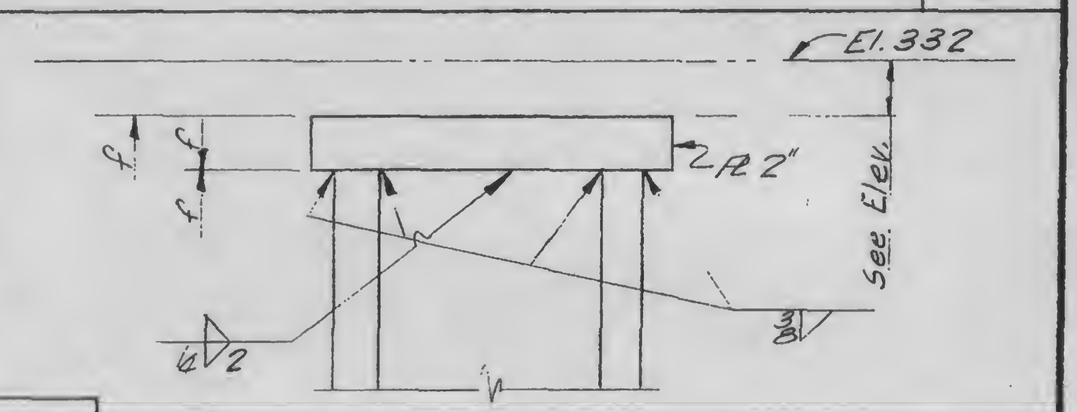

D

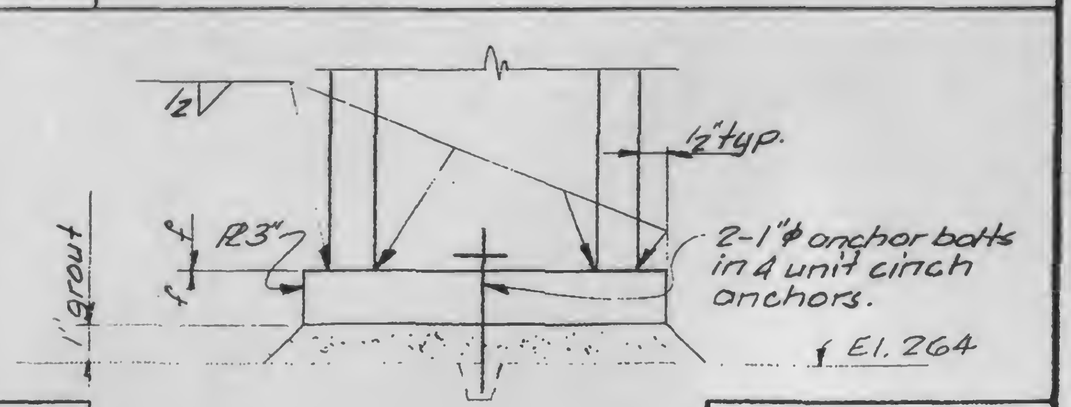

E

13-KZ.2-5

LICENSED PROFESSIONAL ENGINEER — LESLIE E. ROBERTSON — No. 34360 — UNIVERSITY OF THE STATE OF NEW YORK

DESIGNED

DRAWN

REVIEWED

SKILLING, HELLE, CHRISTIANSEN, ROBERTSON — Structural & Civil Engineers

PROJECT: THE WORLD TRADE CENTER

TITLE: TYPICAL GIRDER DETAILS

DATE: 11-3-72

REVISIONS

RELEASE FOR CONSTRUCTION 11-20-72

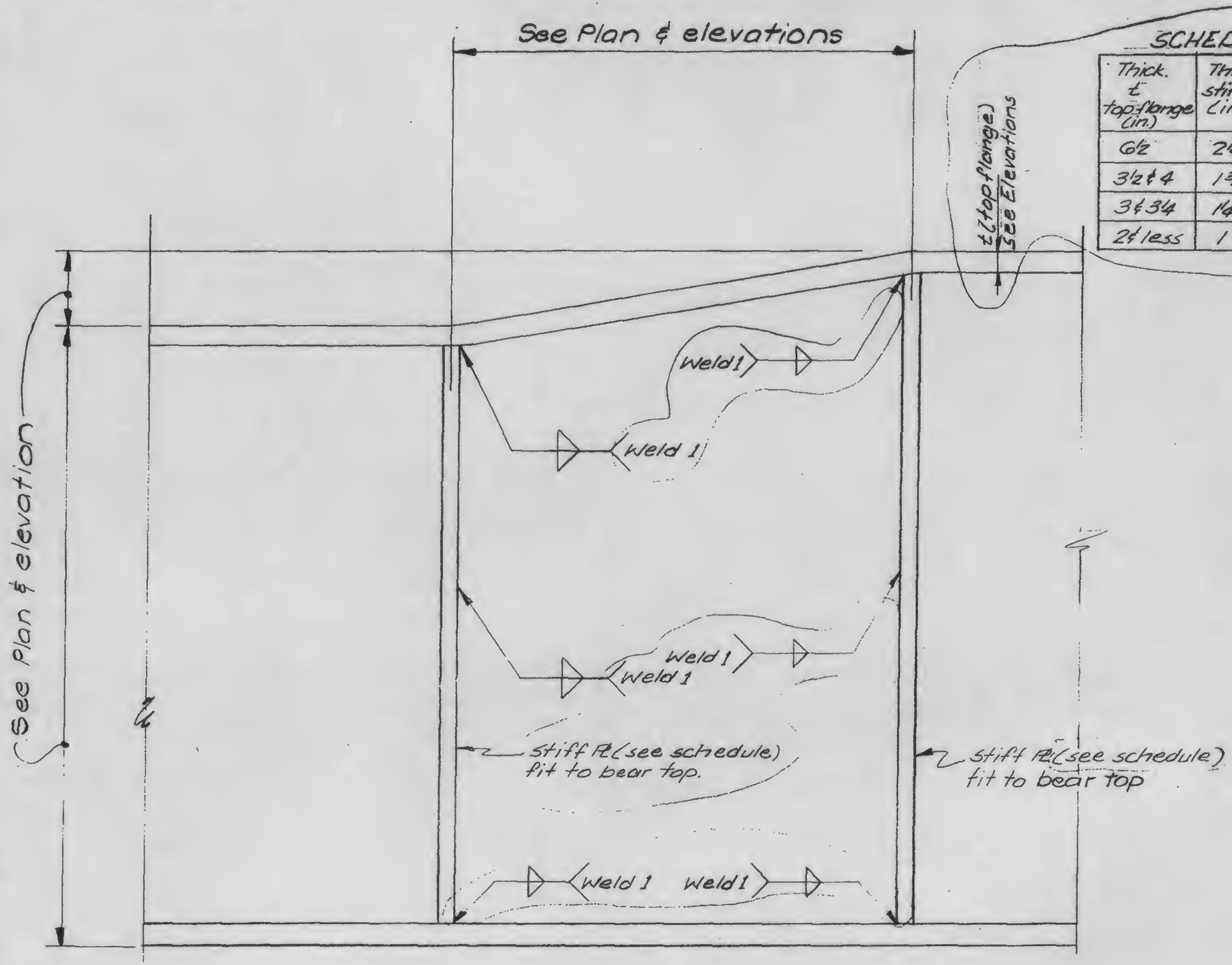

SCHEDULE

Thick. t top flange (in.)	Thick. stiff Pl (in.)	Weld 1
6½	2¼	⅝
3½ & 4	1⅜	½
3 & 3¼	1¼	½
2 & less	1	⅜

LICENSED PROFESSIONAL ENGINEER LESLIE E. ROBERTSON No 34360 UNIVERSITY OF THE STATE OF NEW YORK

DESIGNED

DRAWN

REVIEWED

3-K2.3-1

SKILLING, HELLE, CHRISTIANSEN, ROBERTSON — Structural & Civil Engineers

PROJECT: THE WORLD TRADE CENTER

TITLE: GIRDER TO COLUMN CONNECTION TYPICAL AT END PLATE

DATE: 11-20-72

REVISIONS

RELEASE FOR CONSTRUCTION 11-20-72

12-11-72

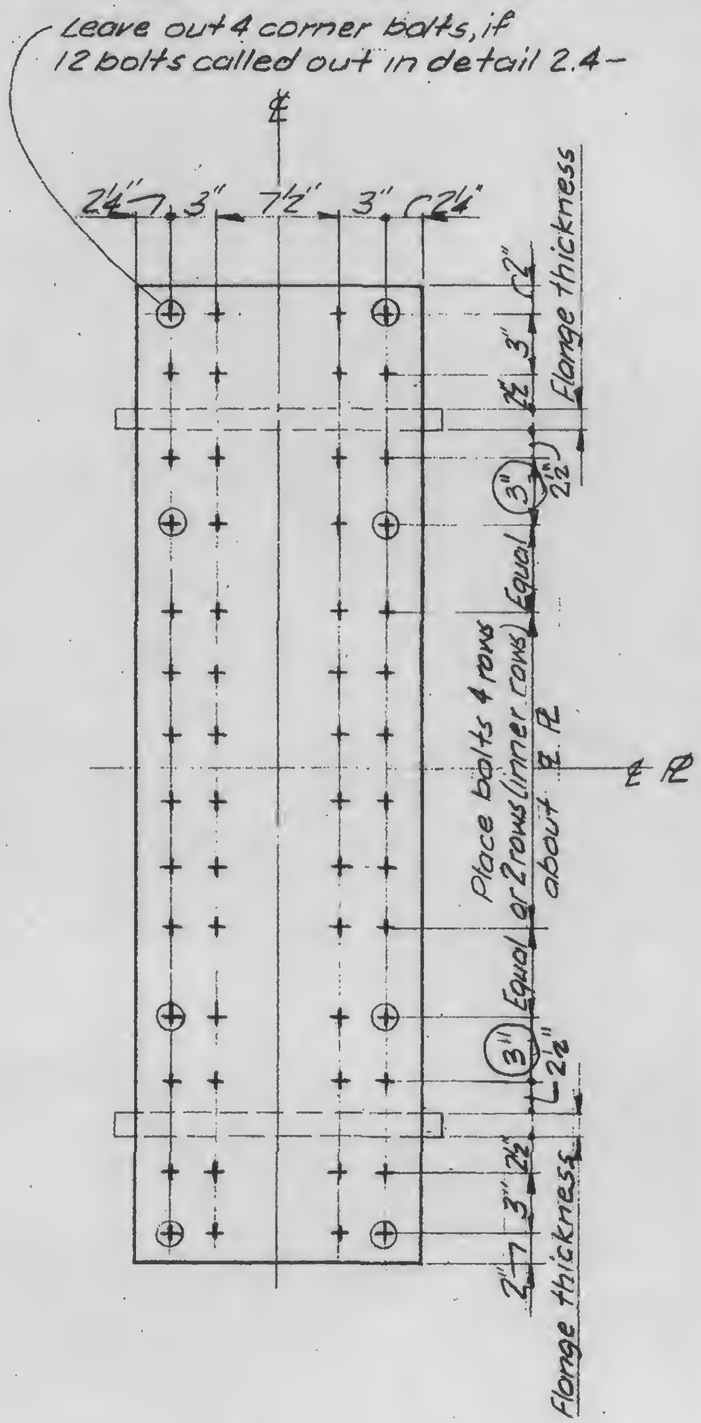

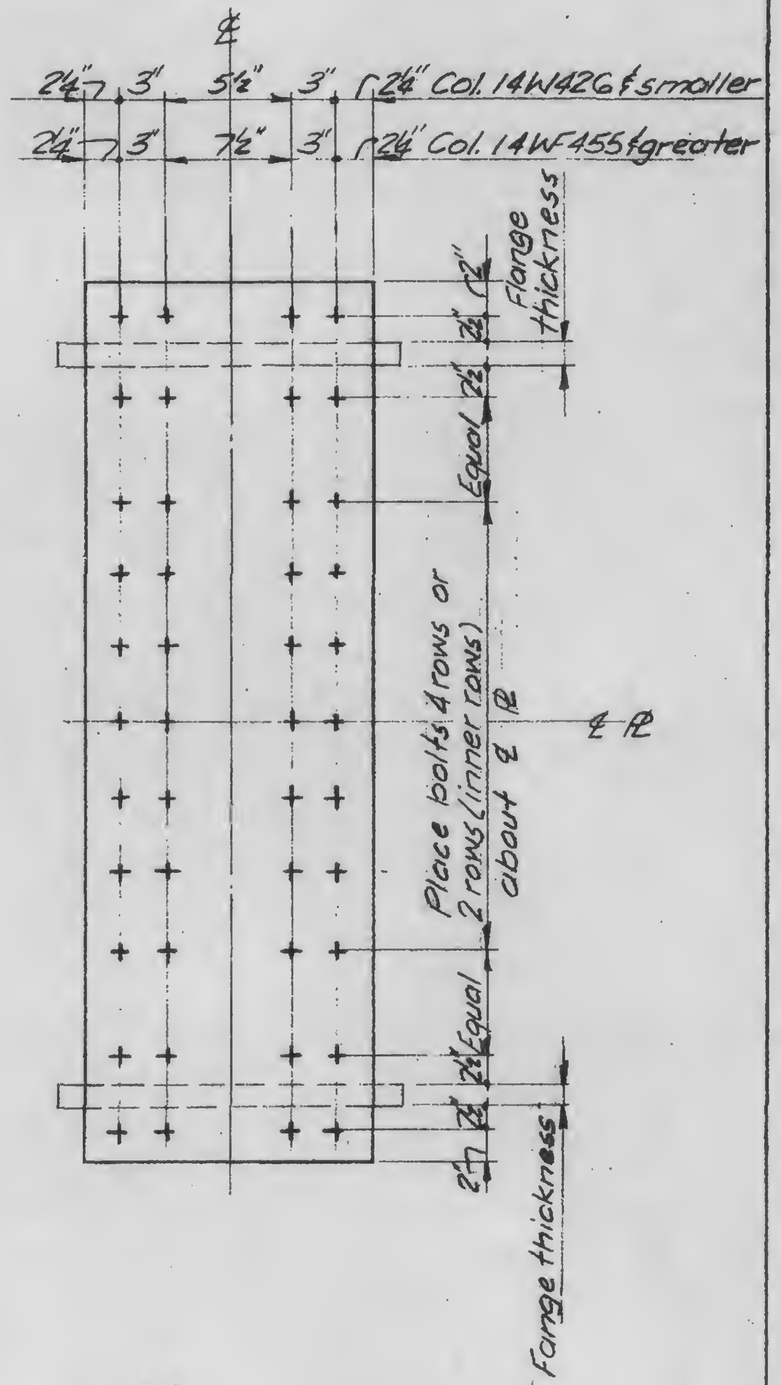

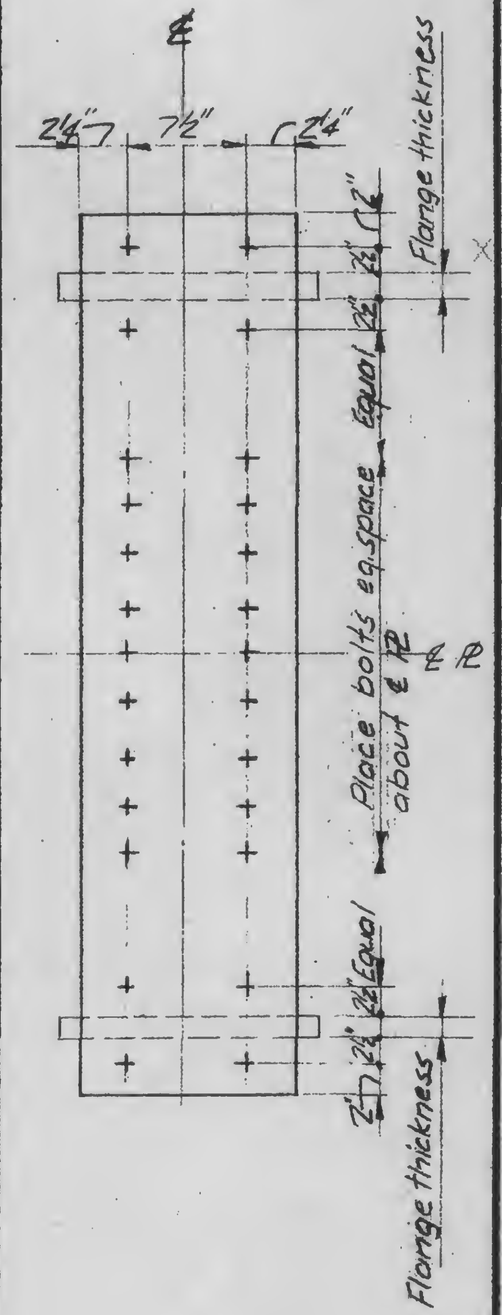

Notes to 2.3 Details

1. See specific 2.4 Details for number of bolts.
2. All bolts of 2.4 Details to be A490 X, unless otherwise noted.

LICENSED PROFESSIONAL ENGINEER — LESLIE E. ROBERTSON — No. 34360 — UNIVERSITY OF THE STATE OF NEW YORK

SIGNED

DRAWN TR

REVIEWED

A | B | C

13-K2.3-2

SKILLING, HELLE, CHRISTIANSEN, ROBERTSON — Structural & Civil Engineers

PROJECT: THE WORLD TRADE CENTER

TITLE: GIRDER TO COLUMN CONNECTION TYPICAL AT END PLATE

DATE: 11-20-72

REVISIONS

RELEASE FOR CONSTRUCTION 11-20-72

12-11-72

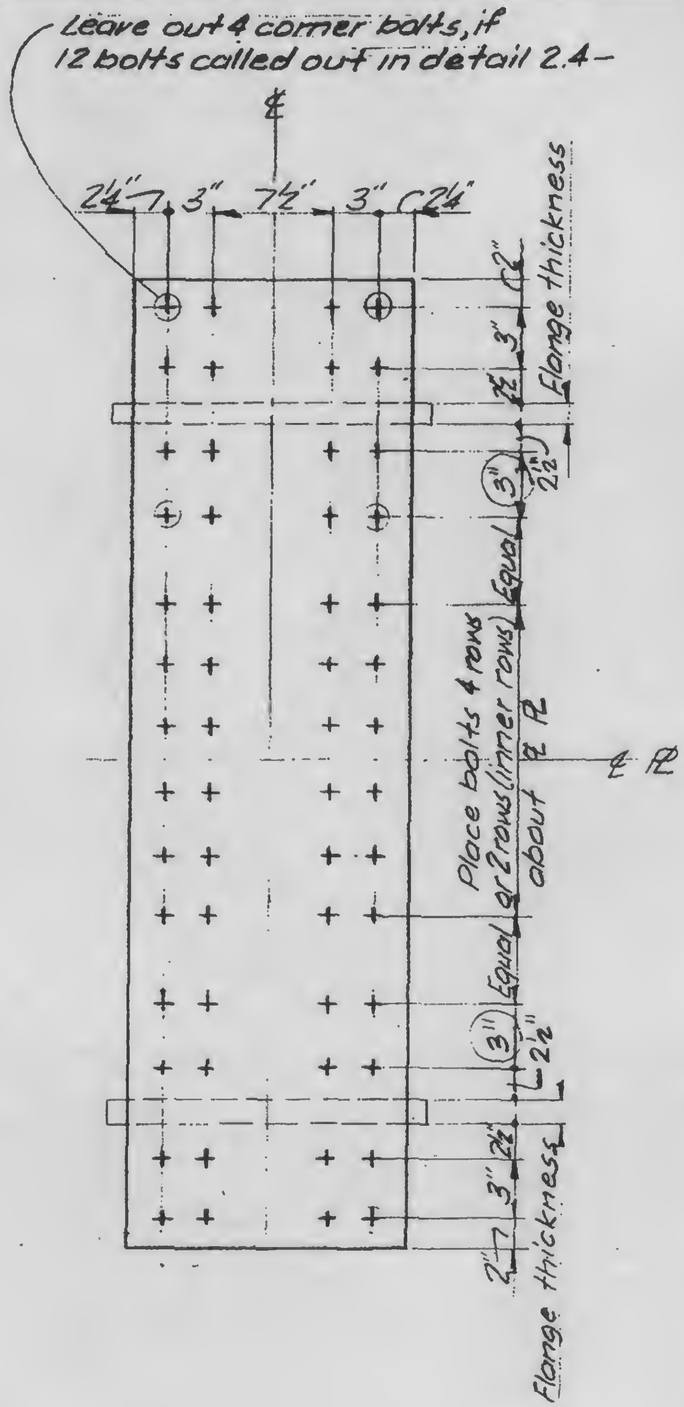

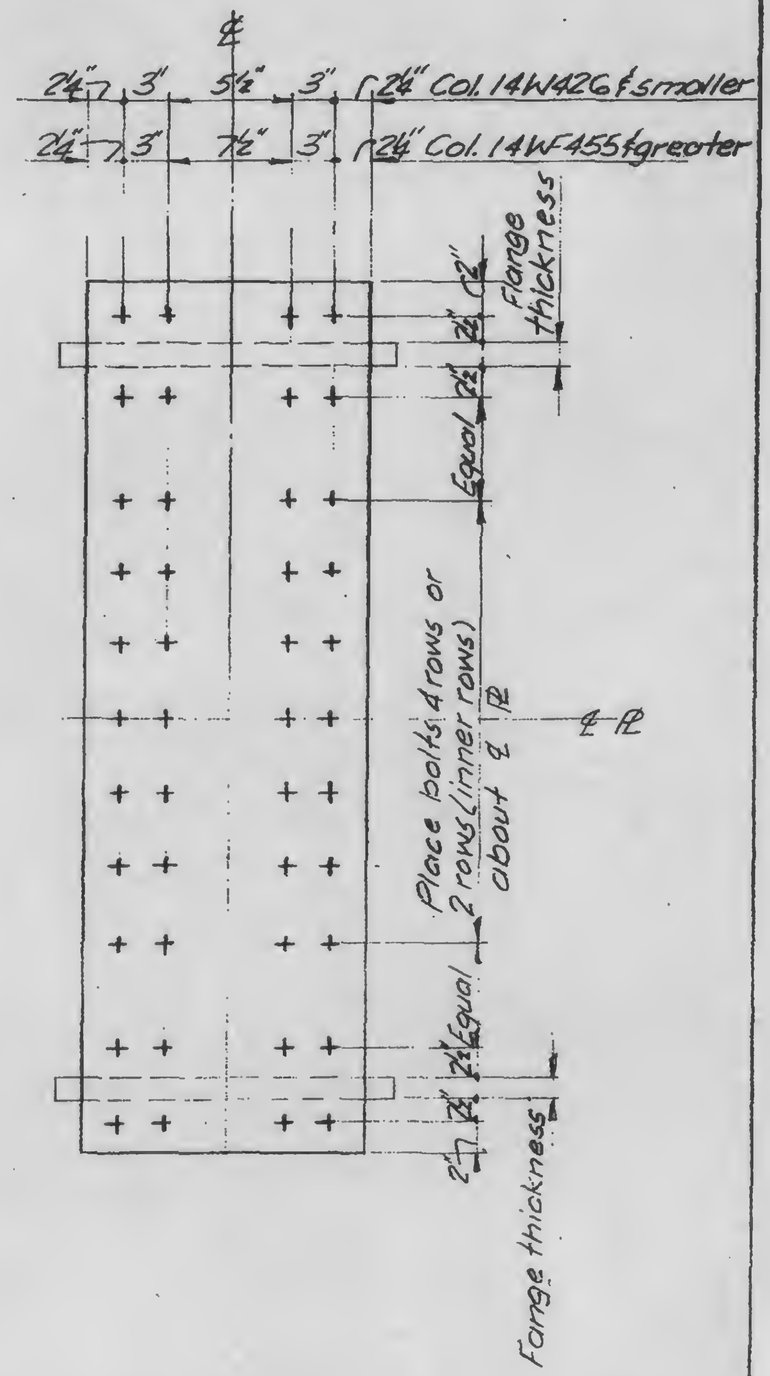

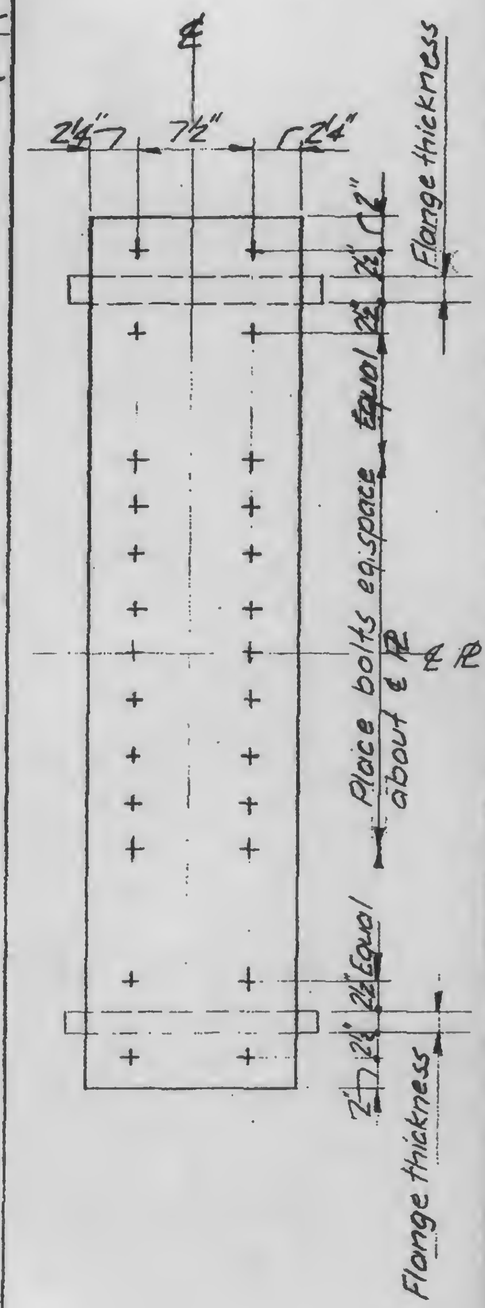

Notes to 2.4 Details

1. See specific 2.4 Details for number of bolts.
2. All bolts of 2.4 Details to be A490 X, unless otherwise noted.

LICENSED PROFESSIONAL ENGINEER — LESLIE E. ROBERTSON — No. 34360 — UNIVERSITY OF THE STATE OF NEW YORK

DESIGNED

DRAWN TR

REVIEWED

A | B | C

13-K2.3-2

SKILLING, HELLE, CHRISTIANSEN, ROBERTSON — Structural & Civil Engineers

PROJECT: THE WORLD TRADE CENTER

TITLE: GIRDER FLANGE SPLICES - TYPICAL DETAILS

DATE: 6-4-73

REVISIONS

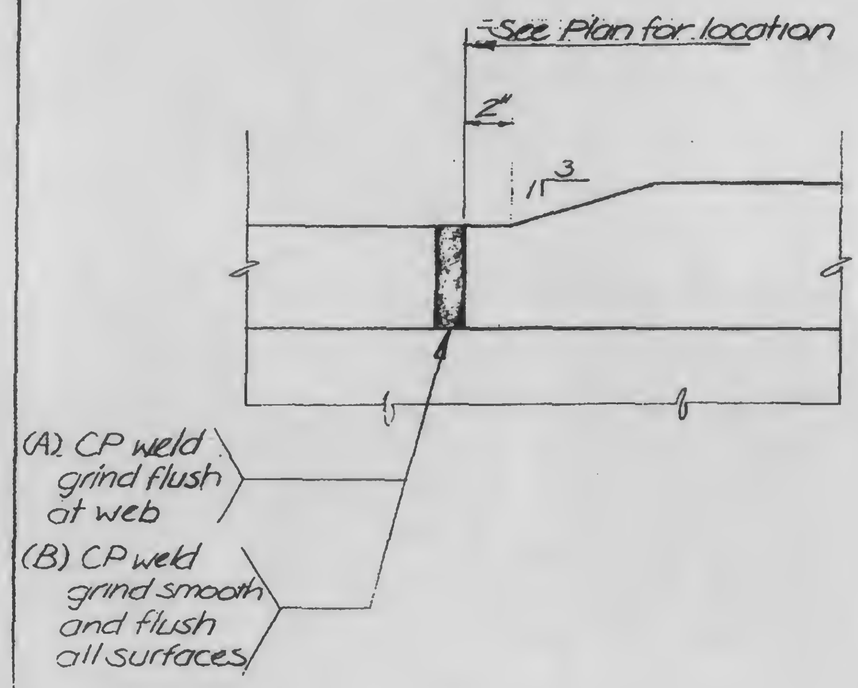

A

Upside down B

LICENSED PROFESSIONAL ENGINEER
LESLIE E. ROBERTSON
No. 34360
UNIVERSITY OF THE STATE OF NEW YORK

DESIGNED

DRAWN

REVIEWED

13-K 2.3-3

SKILLING, HELLE, CHRISTIANSEN, ROBERTSON — Structural & Civil Engineers

PROJECT: THE WORLD TRADE CENTER

TITLE: GIRDER COLUMN DETAILS

DATE: 11-3-72

REVISIONS

General Revision Released for construction 11-20-72

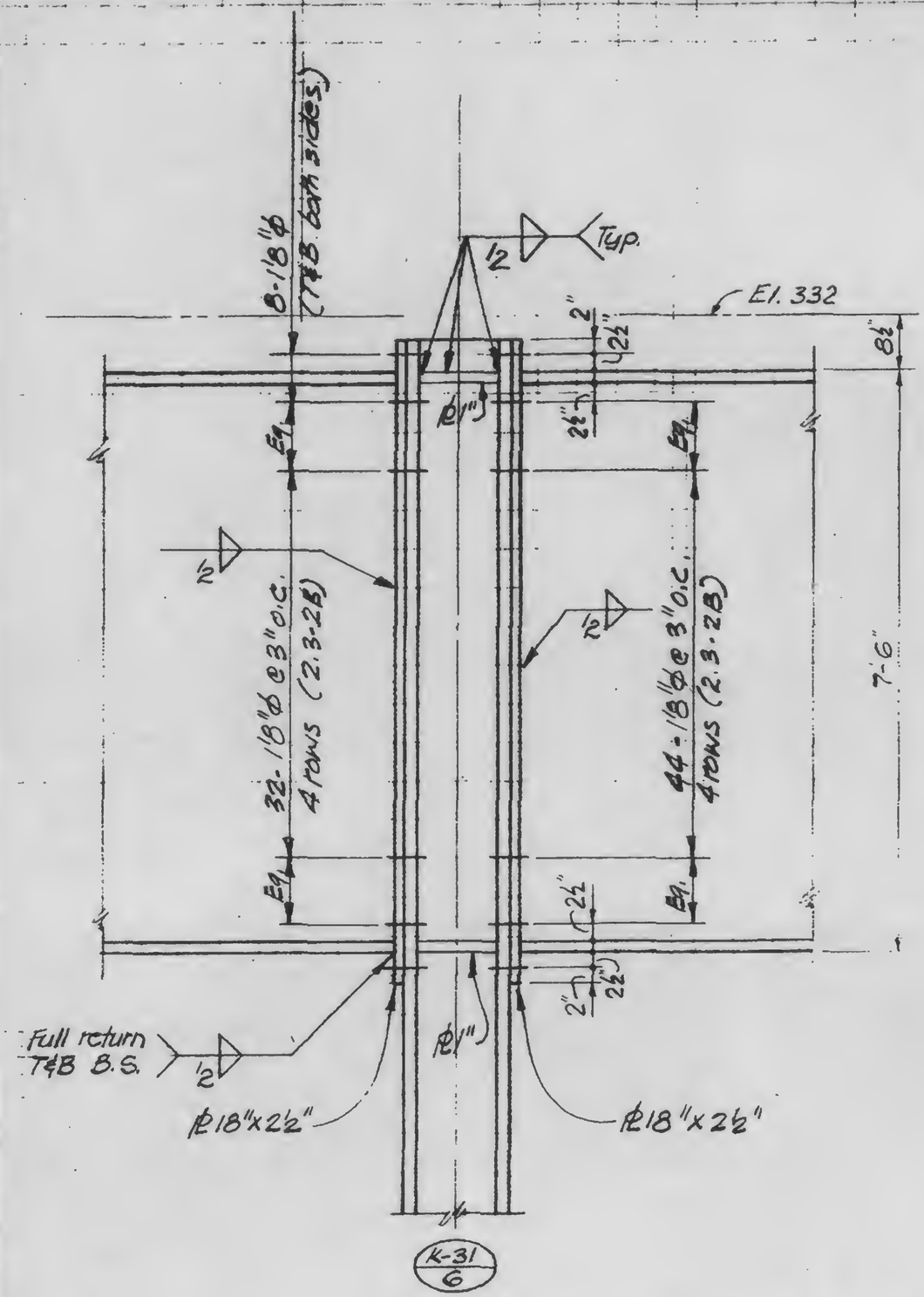

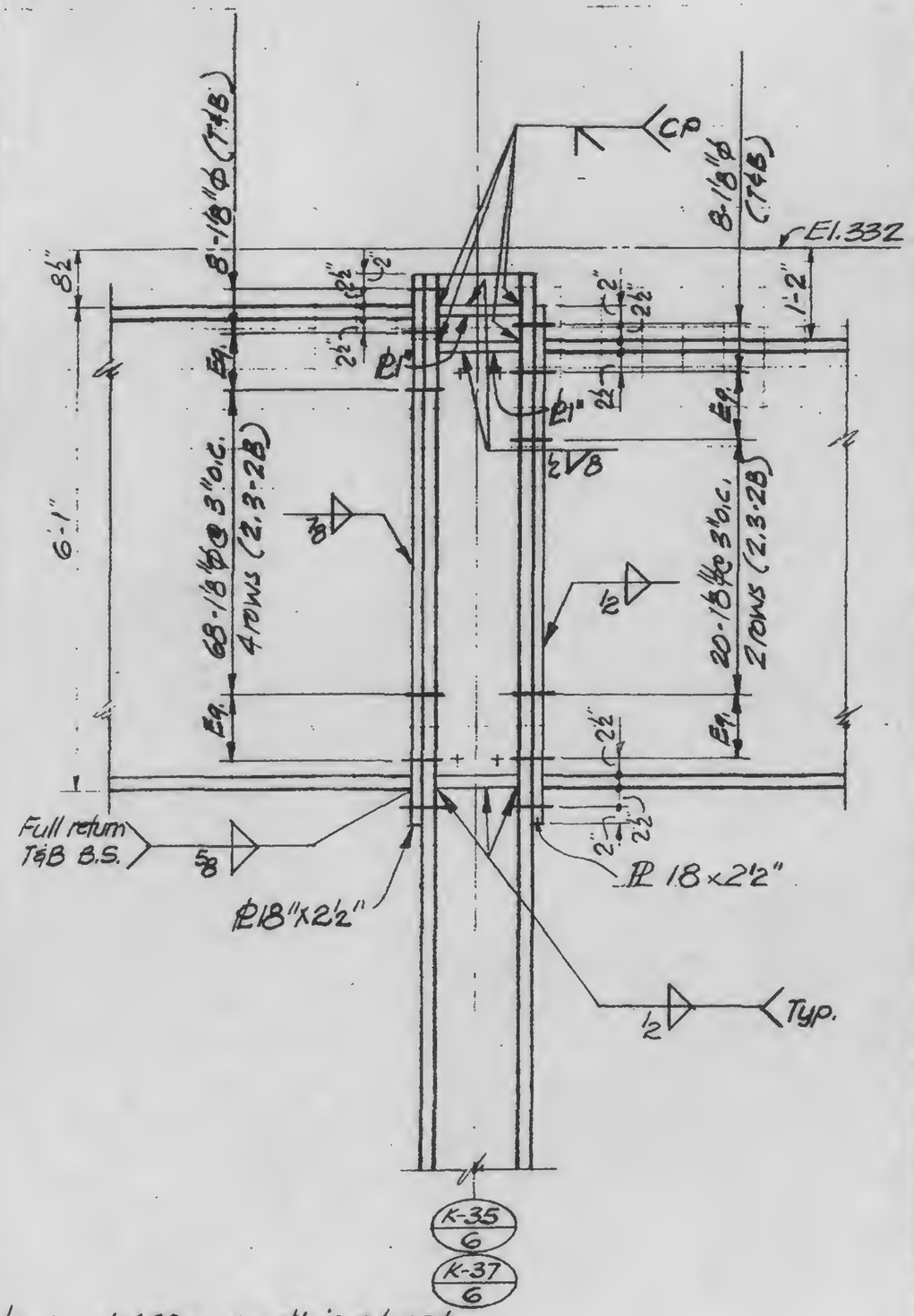

Note: All bolts to be A490x on this sheet.

LICENSED PROFESSIONAL ENGINEER — LESLIE E. ROBERTSON — No. 34960 — UNIVERSITY OF THE STATE OF NEW YORK

DESIGNED

DRAWN John G. Wiering

REVIEWED

A | B

13-K2.4-1

SKILLING, HELLE, CHRISTIANSEN, ROBERTSON — Structural & Civil Engineers

PROJECT: THE WORLD TRADE CENTER

TITLE: GIRDER COLUMN DETAILS

DATE: 11-3-72

REVISIONS

Released for construction 11-20-72

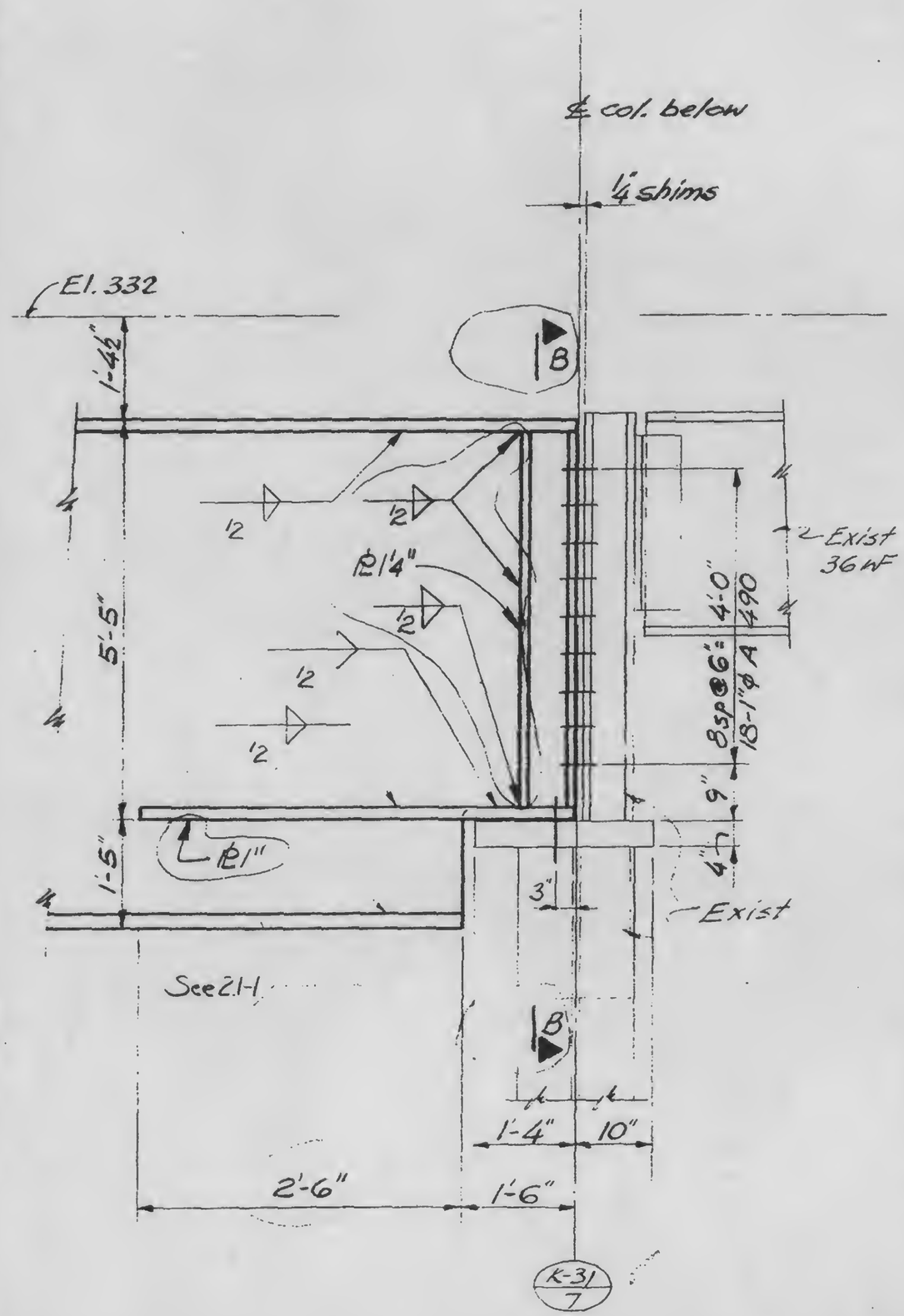

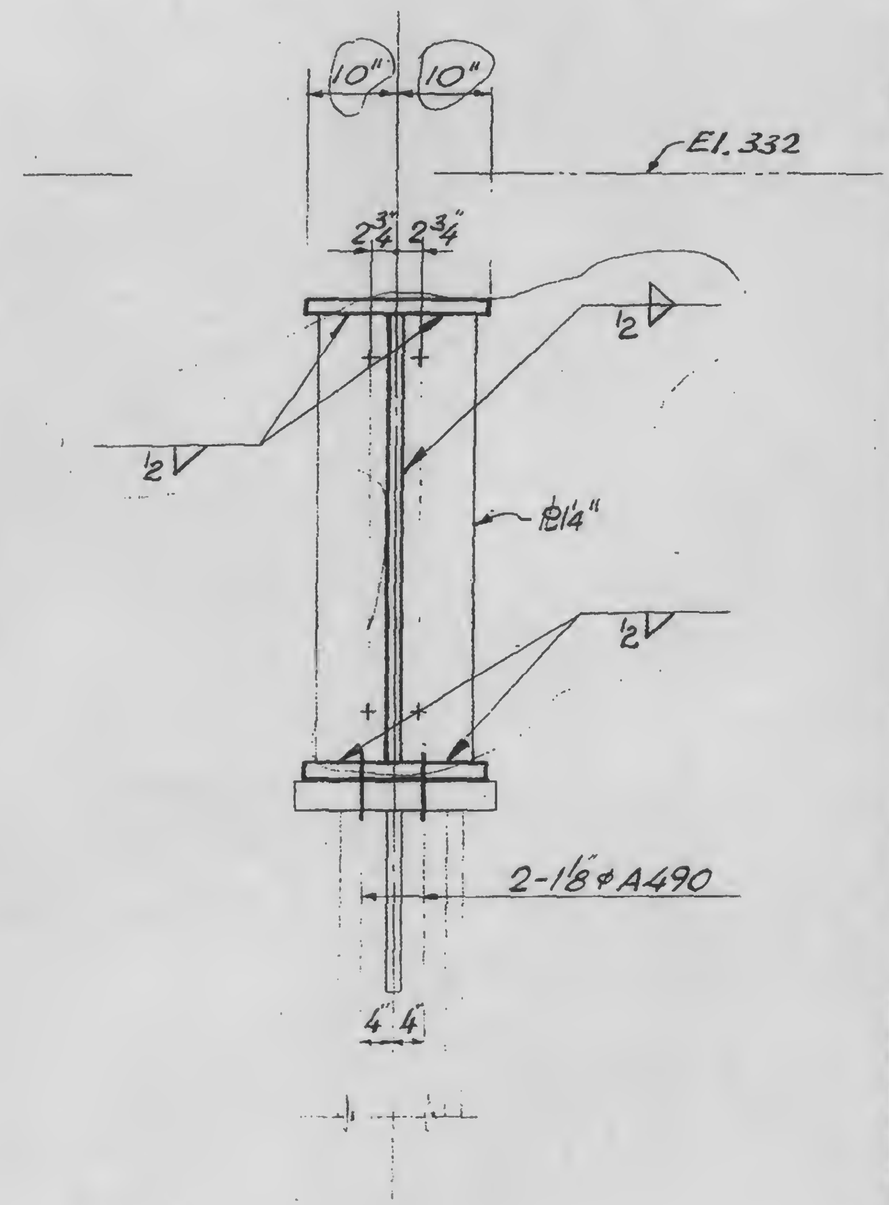

LICENSED PROFESSIONAL ENGINEER — LESLIE E. ROBERTSON — No 34360 — UNIVERSITY OF THE STATE OF NEW YORK

DESIGNED

DRAWN

REVIEWED

A | B

13-K2.4-2

SKILLING, HELLE, CHRISTIANSEN, ROBERTSON — Structural & Civil Engineers

PROJECT: THE WORLD TRADE CENTER | TITLE: GIRDER COLUMN DETAILS | DATE: 11-3-72

REVISIONS

Released for construction 11-20-72

2-5-73

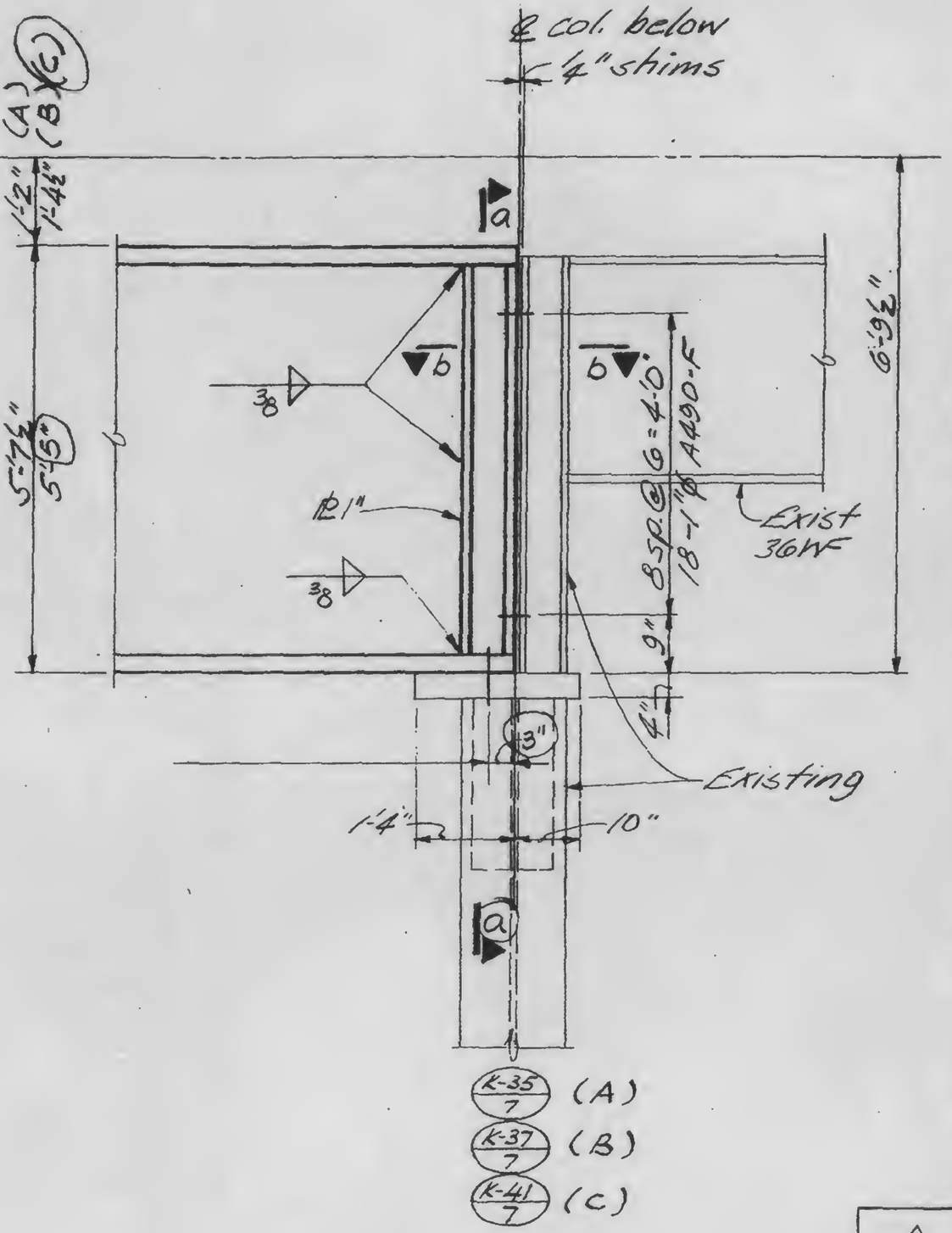

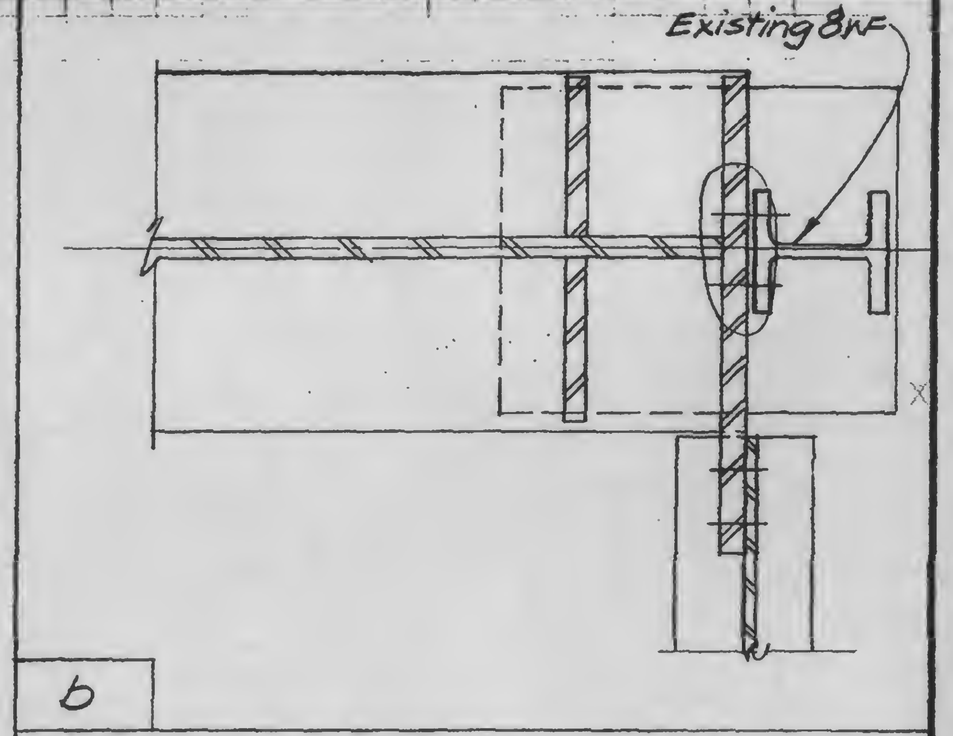

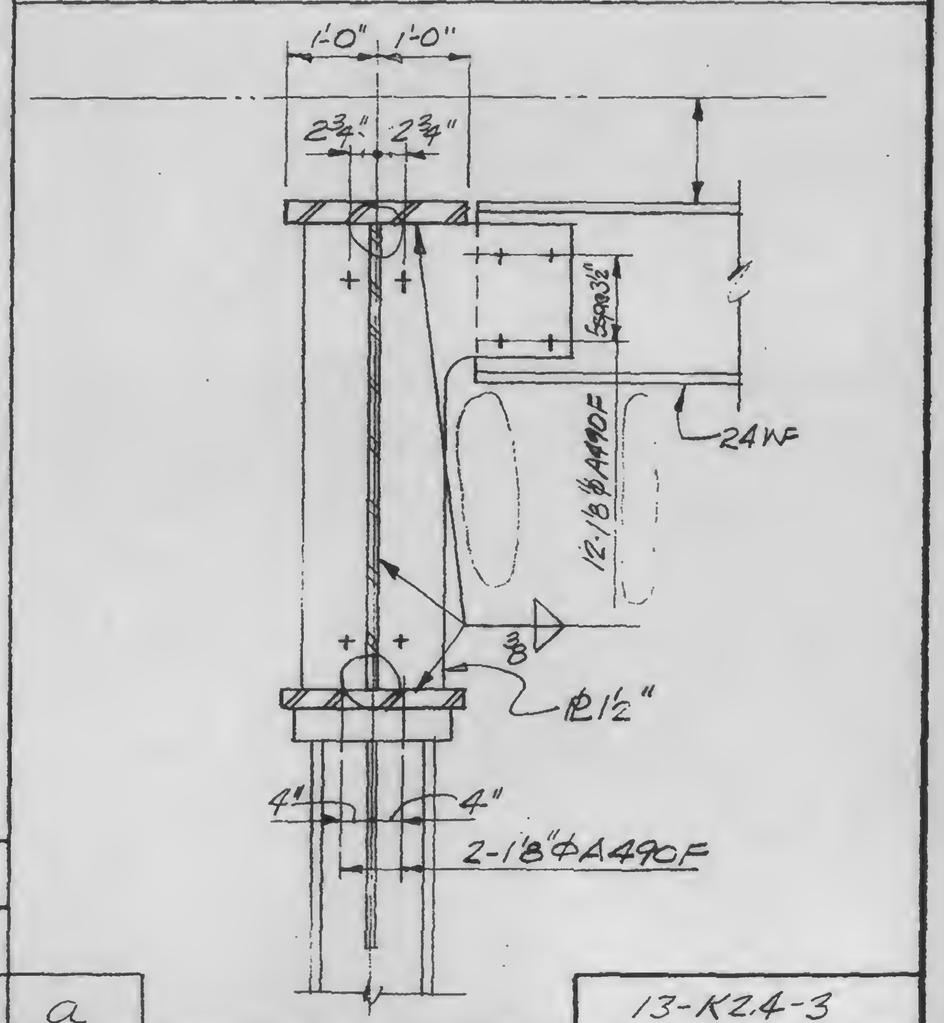

LICENSED PROFESSIONAL ENGINEER — LESLIE E. ROBERTSON — No. 34360 — UNIVERSITY OF THE STATE OF NEW YORK

DESIGNED

DRAWN: J. F. Ivans

REVIEWED

A | 3 | C | a

13-K2.4-3

SKILLING, HELLE, CHRISTIANSEN, ROBERTSON — Structural [illegible]il Engineers

PROJECT: THE WORLD TRADE CENTER | TITLE: GIRDER COLUMN DETAILS | DATE: 11-3-72

REVISIONS

General Revision Released for Construction 11-20-72

2-5-73

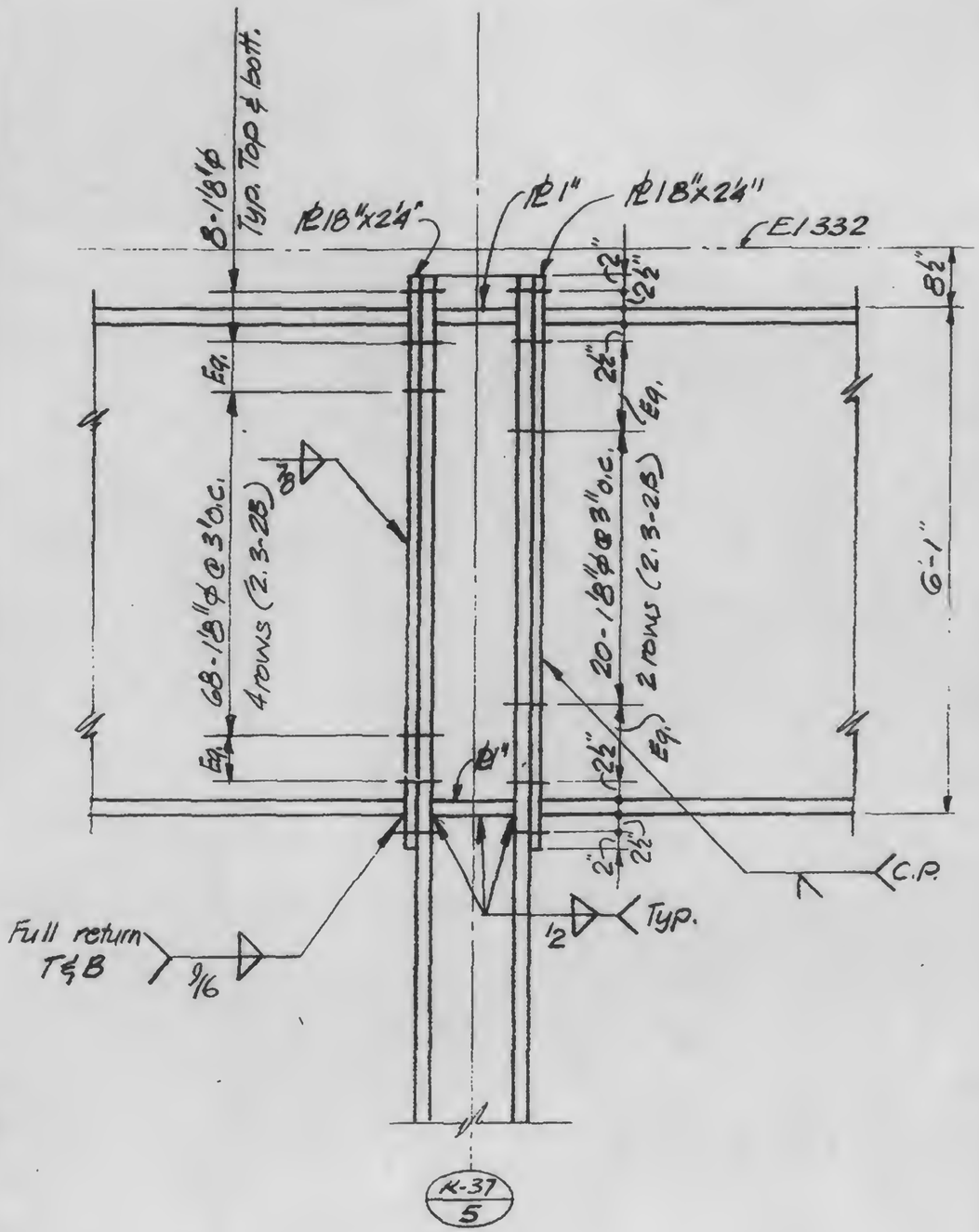

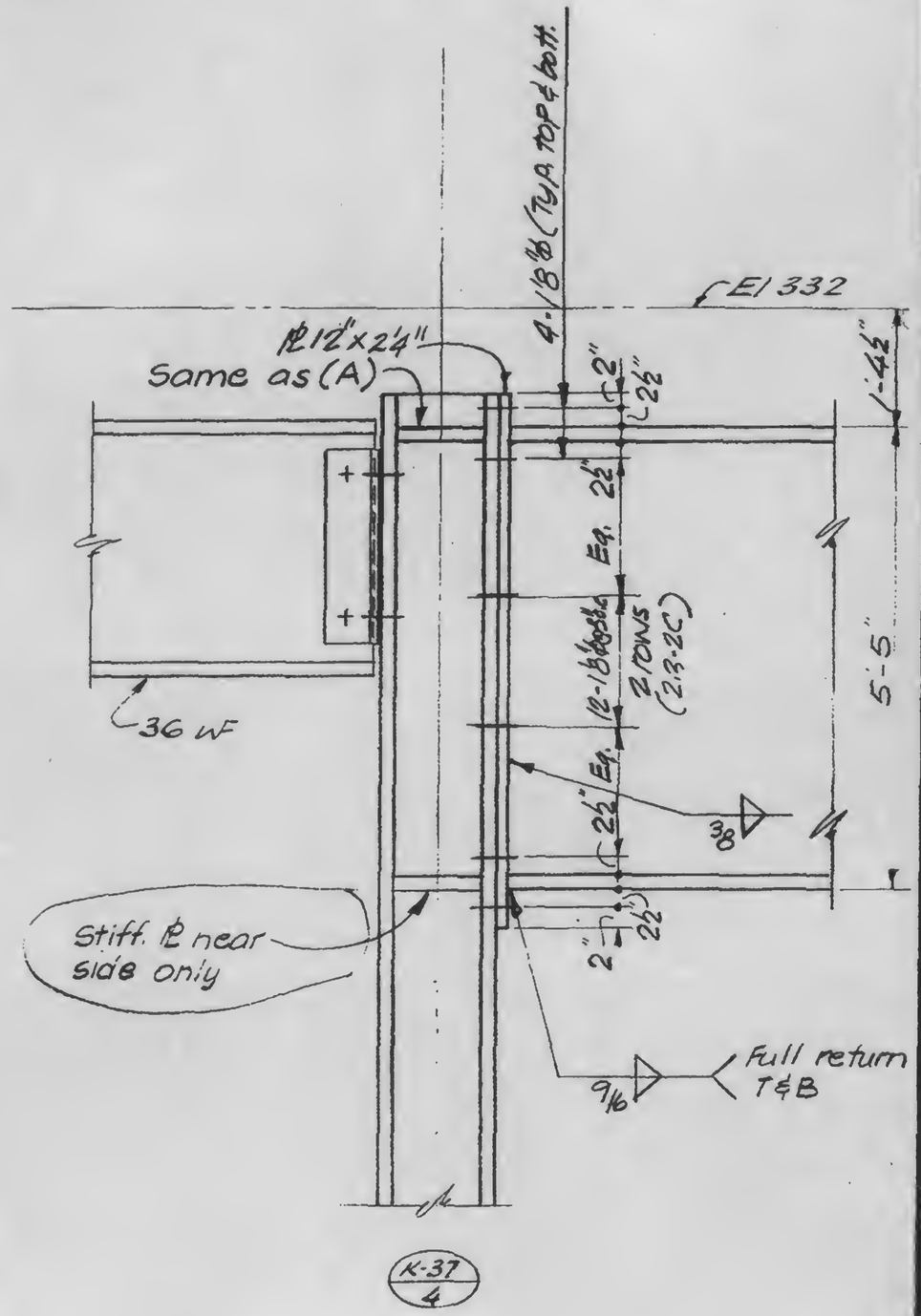

Note: All bolts A490X on this sheet

LICENSED PROFESSIONAL ENGINEER — LESLIE E. ROBERTSON — No. 34360 — UNIVERSITY OF THE STATE OF NEW YORK

DESIGNED

DRAWN John Gracias

REVIEWED

A | B

13-K2.4-4

SKILLING, HELLE, CHRISTIANSEN, ROBERTSON — Structural & Civil Engineers

PROJECT: THE WORLD TRADE CENTER | TITLE: GIRDER COLUMN - DETAILS | DATE: 11-3-72

REVISIONS

- General Revision Released for Construction 11-20-72
- 12-11-72
- 2-5-73

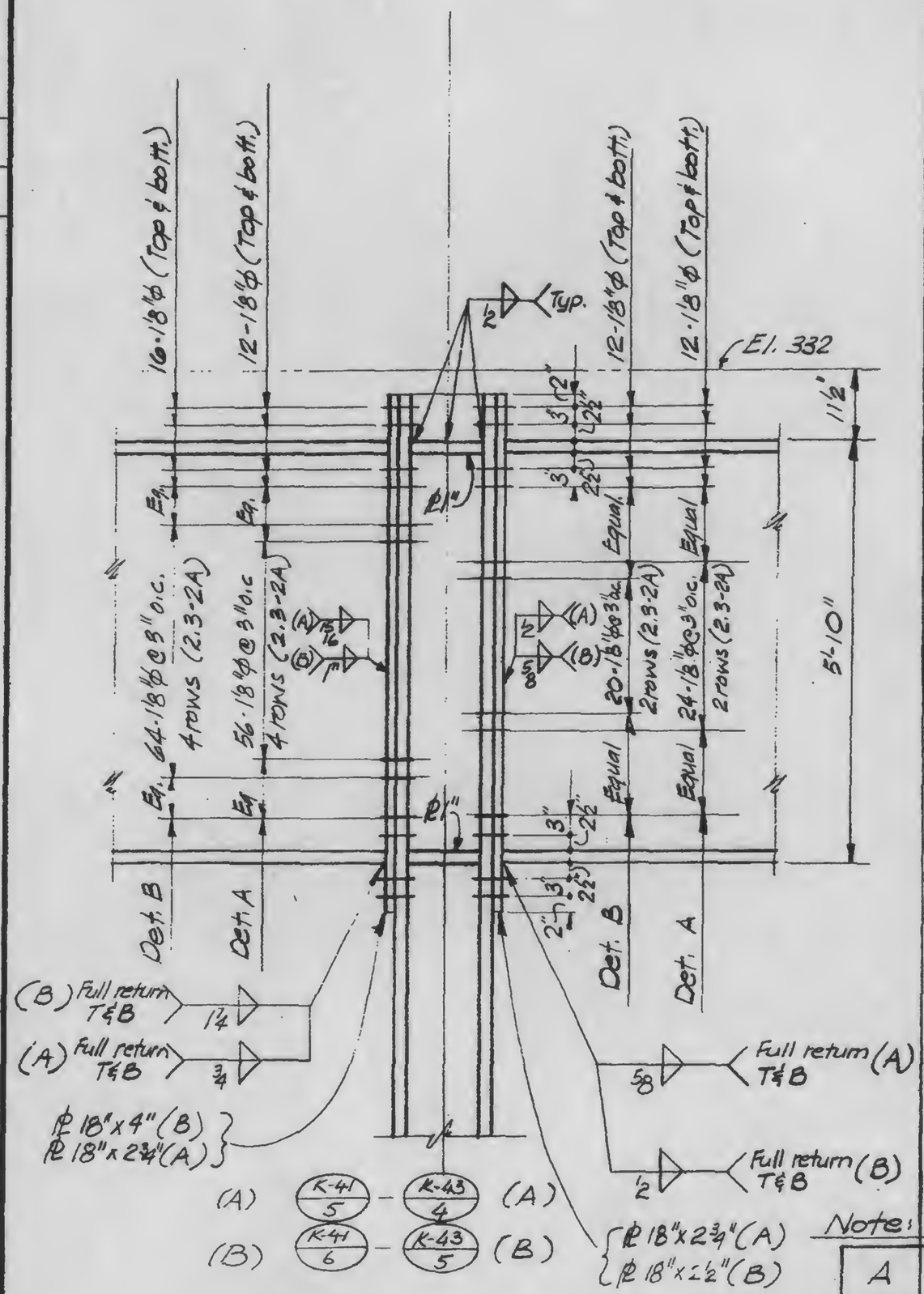

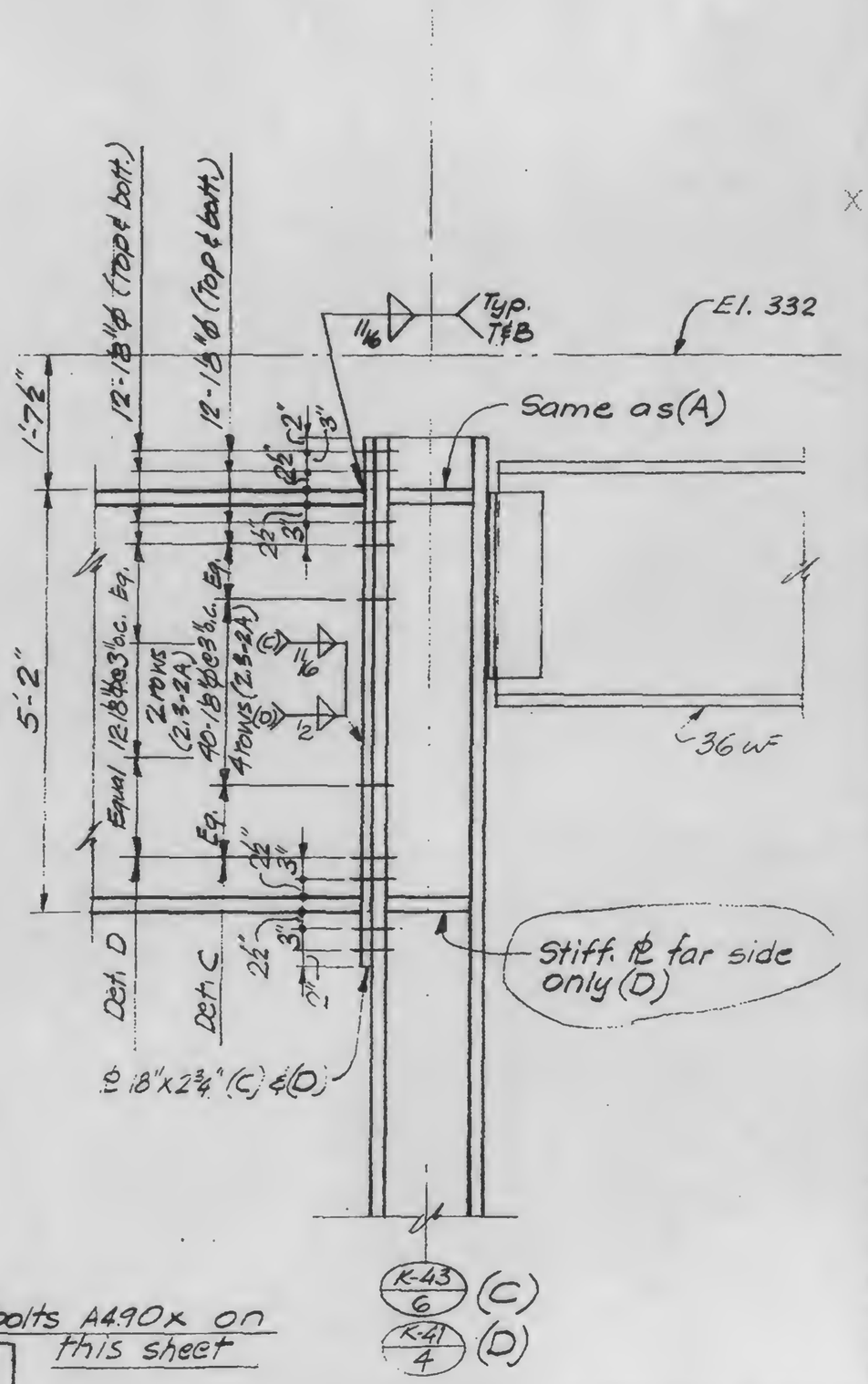

Note: All bolts A490x on this sheet

A	C
B	D

LICENSED PROFESSIONAL ENGINEER — LESLIE E. ROBERTSON — No. 34360 — UNIVERSITY OF THE STATE OF NEW YORK

DESIGNED

DRAWN

REVIEWED

13-K 2.4-5

SKILLING, HELLE, CHRISTIANSEN, ROBERTSON — Structural & Civil Engineers

PROJECT: THE WORLD TRADE CENTER

TITLE: GIRDER COLUMN DETAILS

DATE: 11-3-72

REVISIONS

General Revision — Released for construction 11-20-72

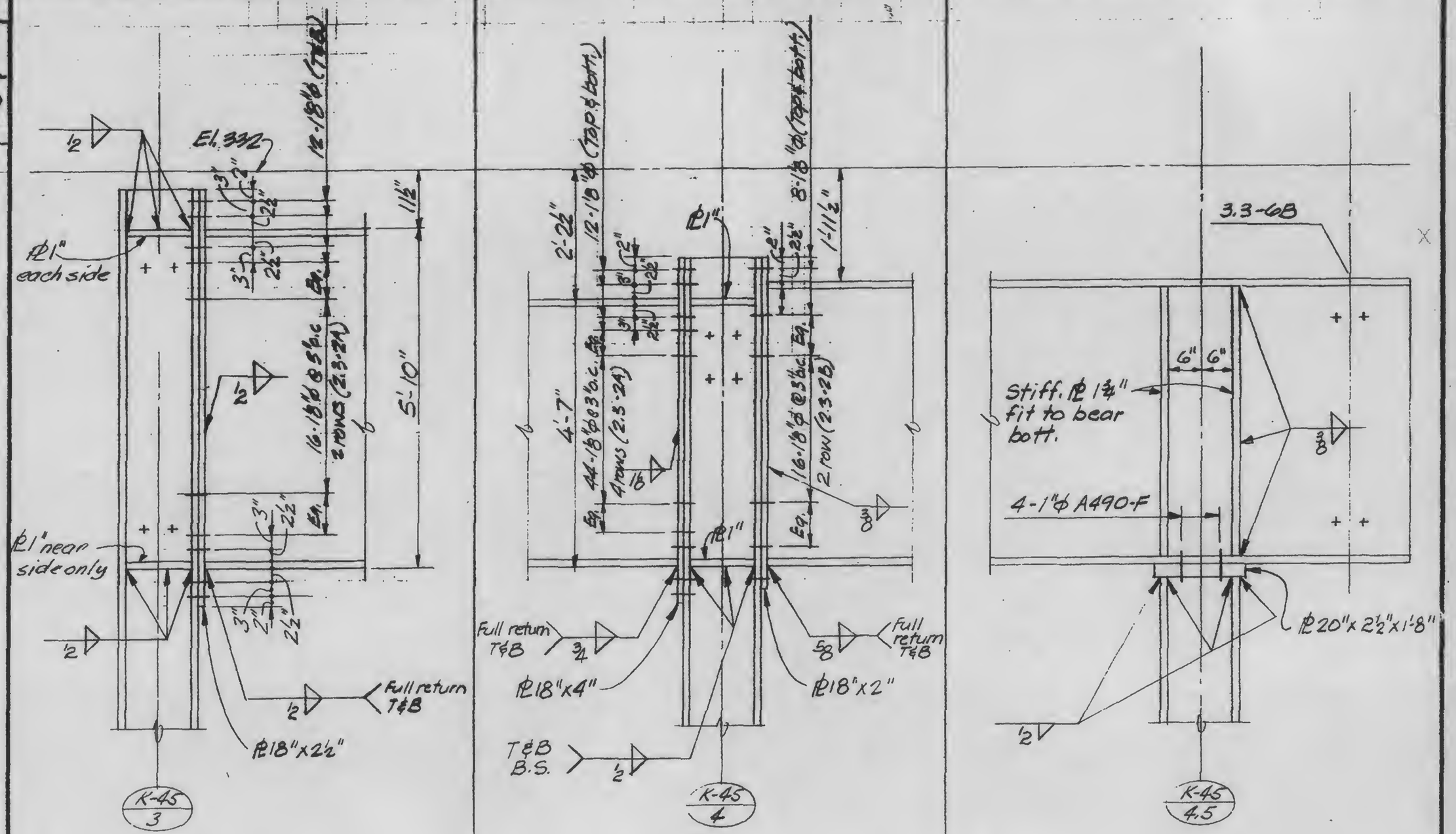

Note: All bolts to be A490x on this sheet

LICENSED PROFESSIONAL ENGINEER — LESLIE E. ROBERTSON — No. 34360 — UNIVERSITY OF THE STATE OF NEW YORK

DESIGNED

DRAWN

REVIEWED

A | B | C

13-K2.4-6

SKILLING, HELLE, CHRISTIANSEN, ROBERTSON — Structural & Civil Engineers

PROJECT: THE WORLD TRADE CENTER | TITLE: GIRDER COLUMN DETAILS | DATE: 11-8-72

REVISIONS

RELEASED FOR CONSTRUCTION 11-20-72

2-5-73

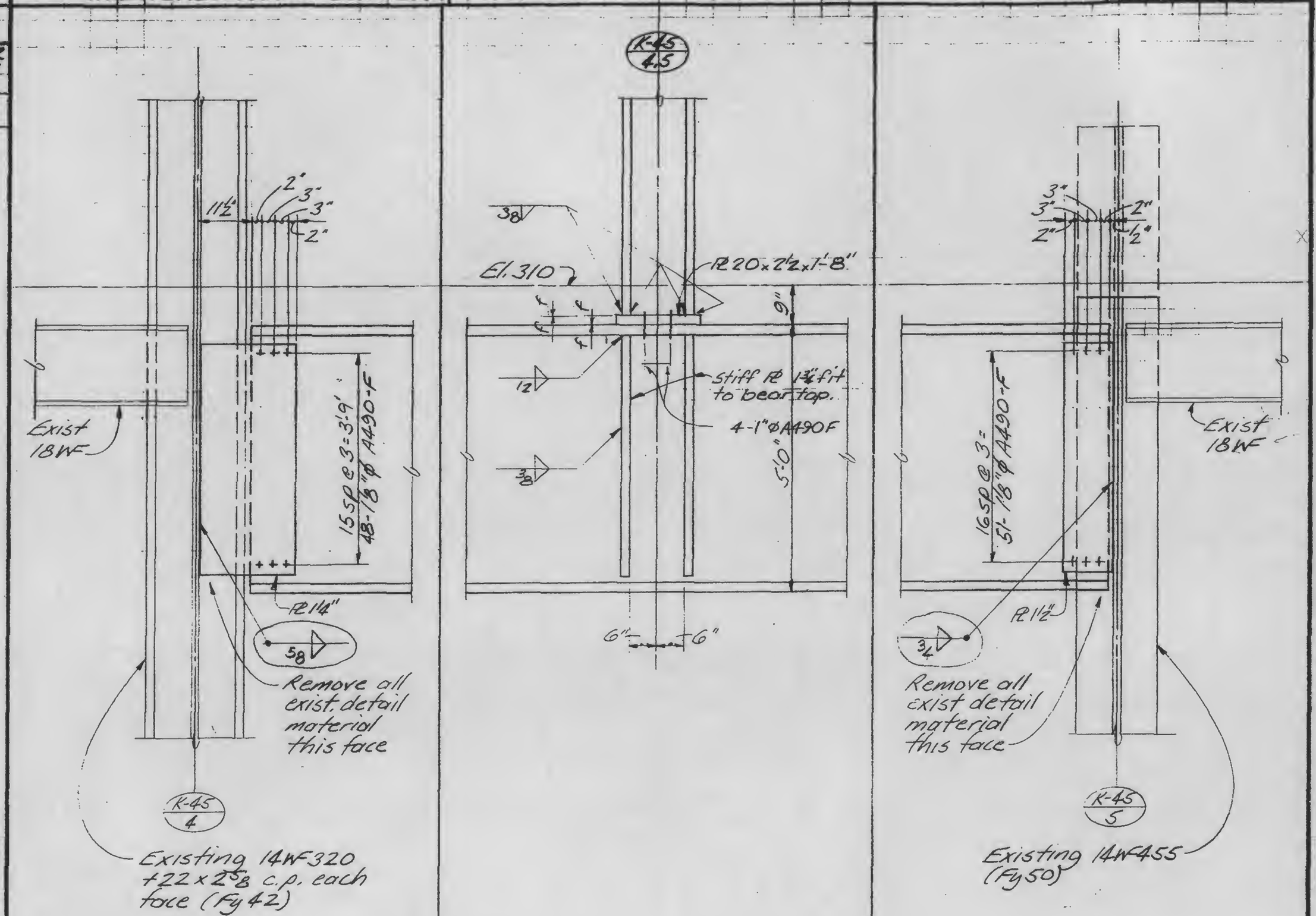

LICENSED PROFESSIONAL ENGINEER — LESLIE E. ROBERTSON — No. 34360 — UNIVERSITY OF THE STATE OF NEW YORK

DESIGNED

DRAWN

REVIEWED

A | B | C

13-K2.4-7

SKILLING, HELLE, CHRISTIANSEN, ROBERTSON — Structural & Civil Engineers

PROJECT: THE WORLD TRADE CENTER | TITLE: GIRDER COLUMN DETAILS | DATE: 11-3-72

REVISIONS

General Revision Released for construction 11-20-72

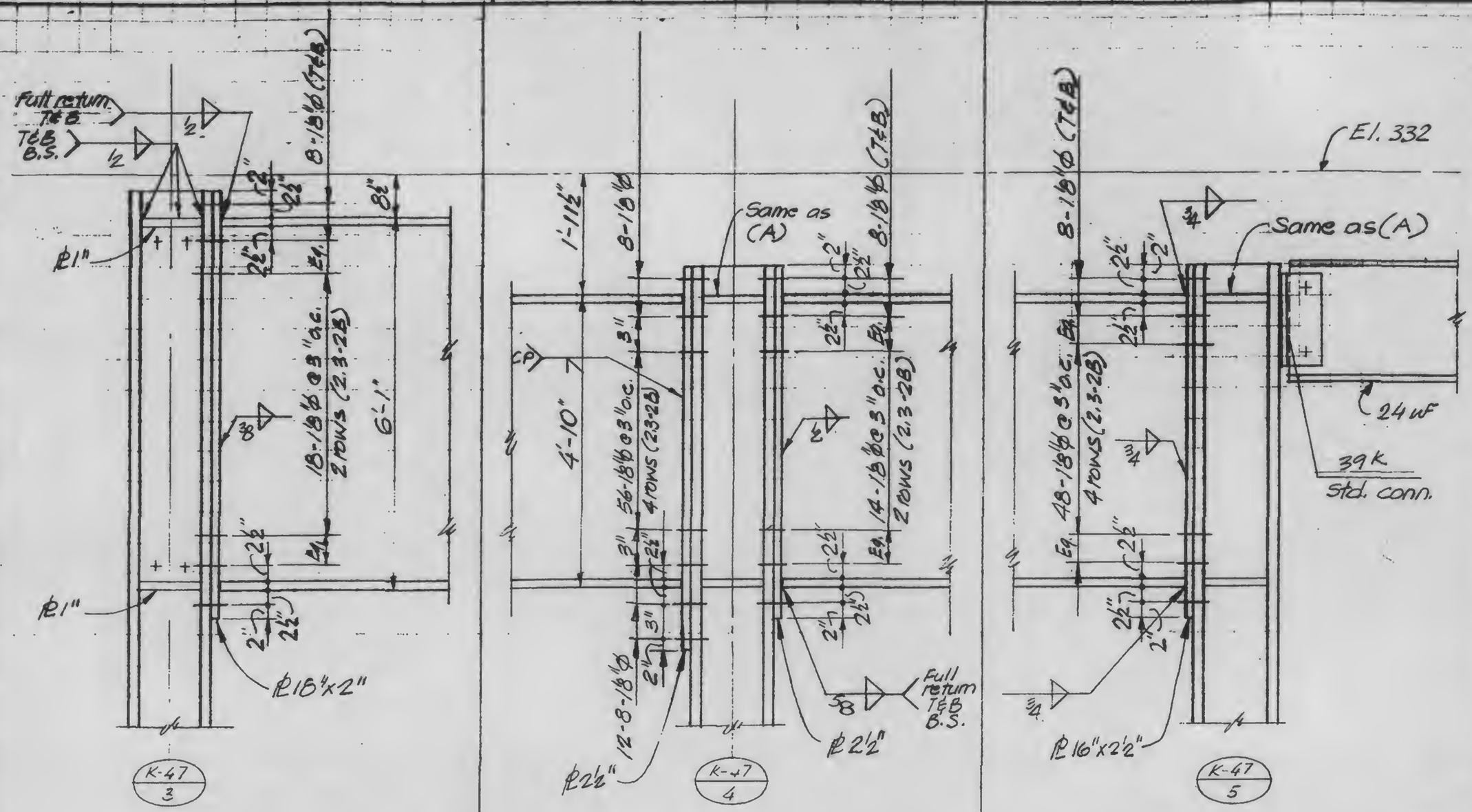

Note: All bolts A490X on this sheet

LICENSED PROFESSIONAL ENGINEER
LESLIE E. ROBERTSON
No. 34360
UNIVERSITY OF THE STATE OF NEW YORK

DESIGNED

DRAWN John Guiciardi

REVIEWED

A | B | C

13-K2.4-8

SKILLING, HELLE, CHRISTIANSEN, ROBERTSON — Structural & Civil Engineers

PROJECT: THE WORLD TRADE CENTER | TITLE: GIRDER COLUMN DETAILS | DATE: 11-20-72

REVISIONS

Released for construction 11-20-72

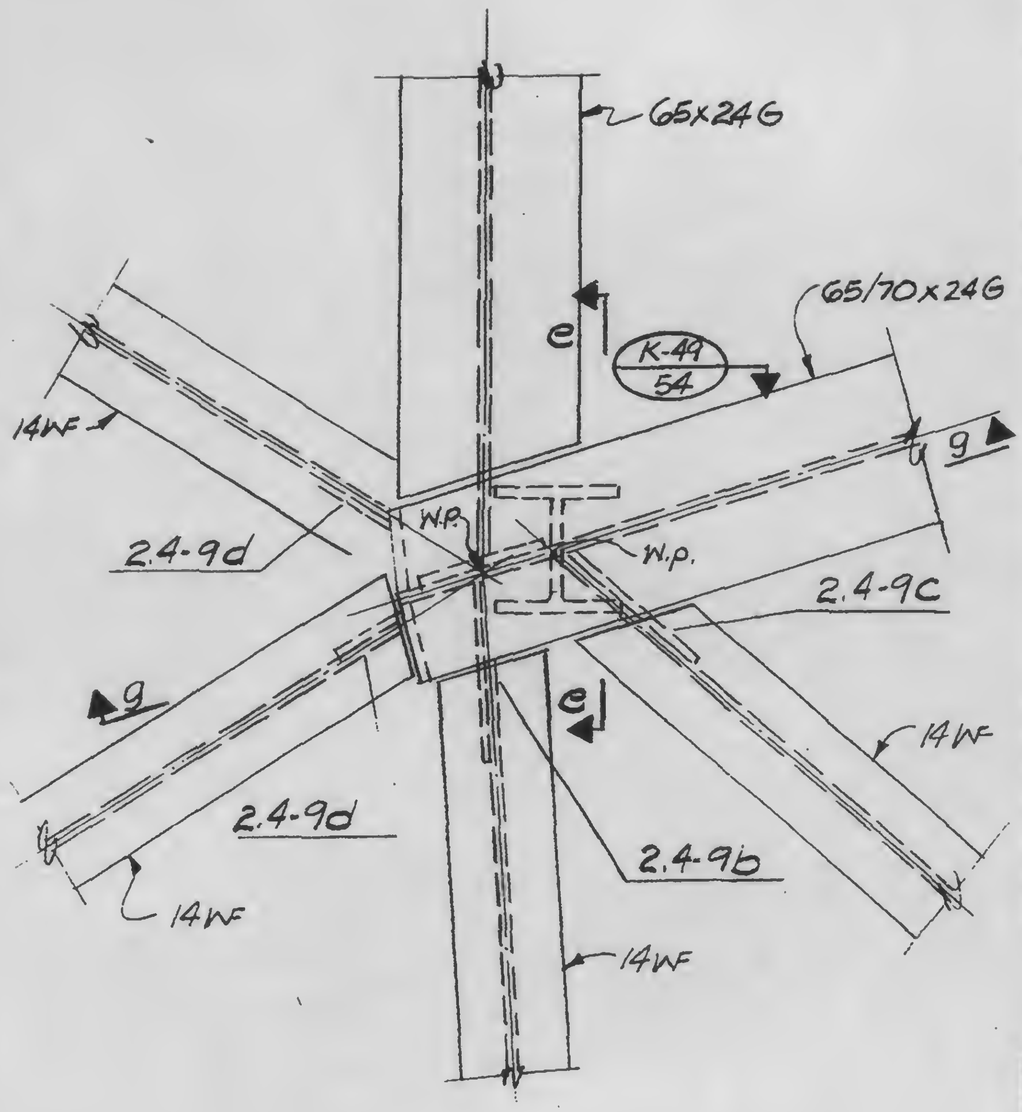

b

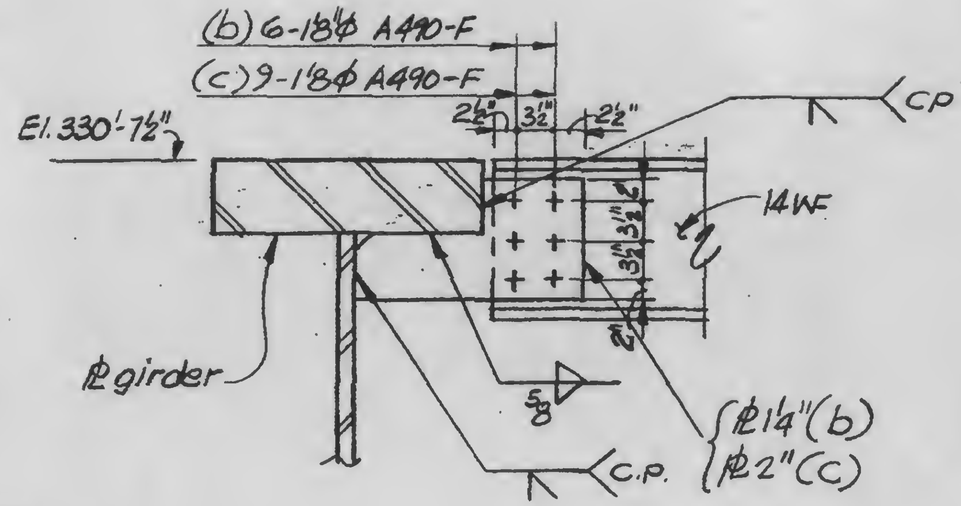

c

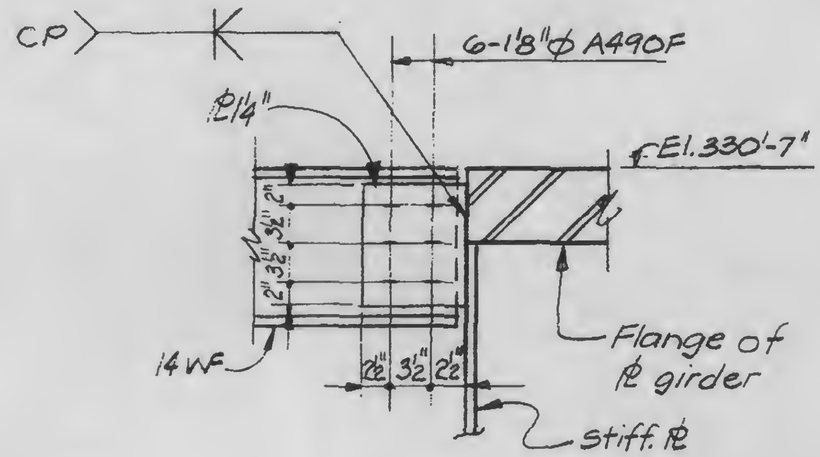

d

13-K2.4-9.1

LICENSED PROFESSIONAL ENGINEER — LESLIE E. ROBERTSON — No 34360 — UNIVERSITY OF THE STATE OF NEW YORK

DESIGNED

DRAWN

REVIEWED

SKILLING, HELLE, CHRISTIANSEN, ROBERTSON — Structural & Civil Engineers

PROJECT: THE WORLD TRADE CENTER | TITLE: GIRDER COLUMN DETAILS | DATE: 11-3-72

REVISIONS

Released for construction 11-20-72

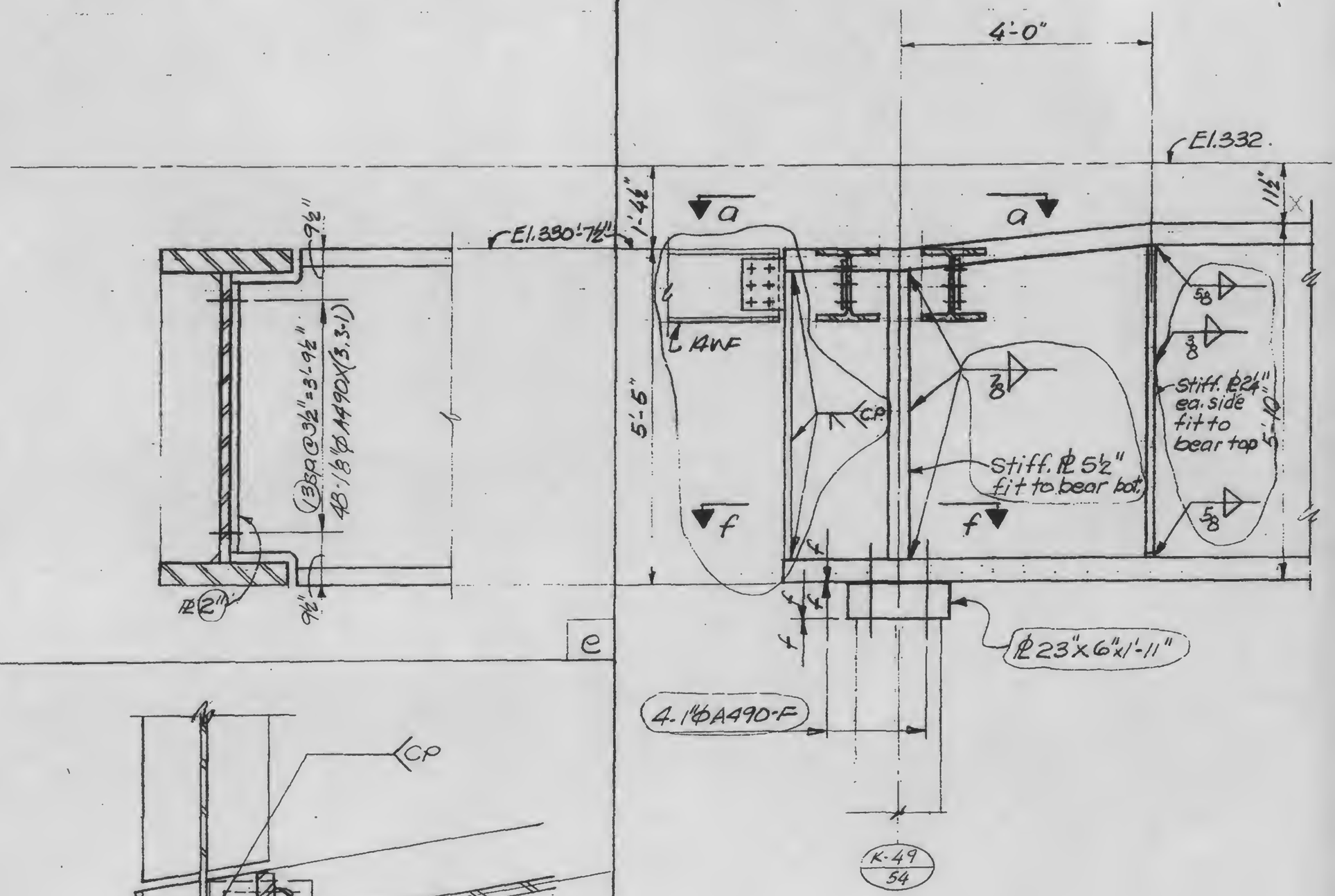

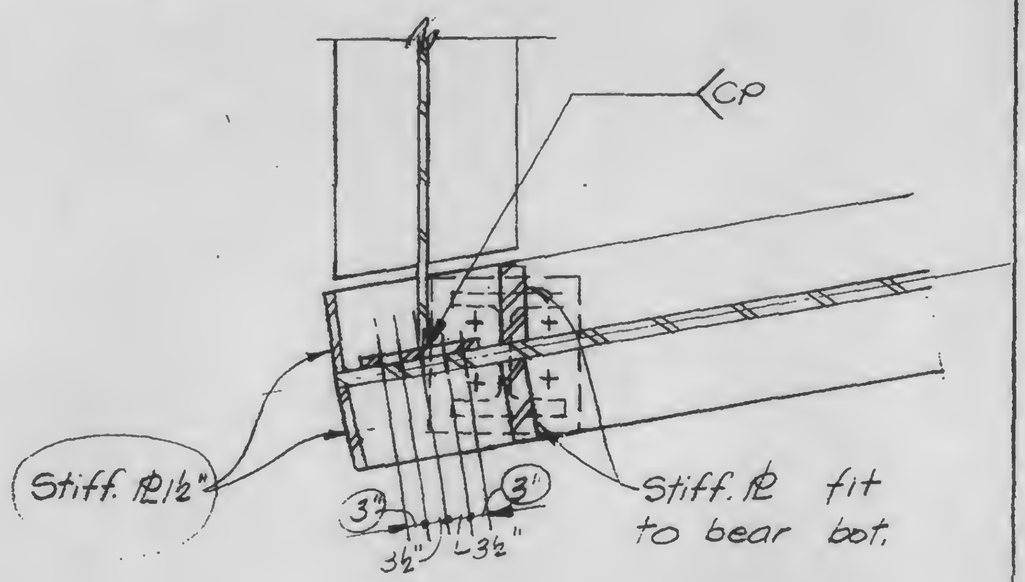

LICENSED PROFESSIONAL ENGINEER — LESLIE E. ROBERTSON — No 34360 — UNIVERSITY OF THE STATE OF NEW YORK

DESIGNED

DRAWN John Gricius

REVIEWED

13-K 2.4-92

SKILLING, HELLE, CHRISTIANSEN, ROBERTSON — Structural & Civil Engineers

PROJECT: THE WORLD TRADE CENTER | TITLE: GIRDER COLUMN DETAIL | DATE: 11-3-72

REVISIONS

General Revision Released for construction 11-20-72

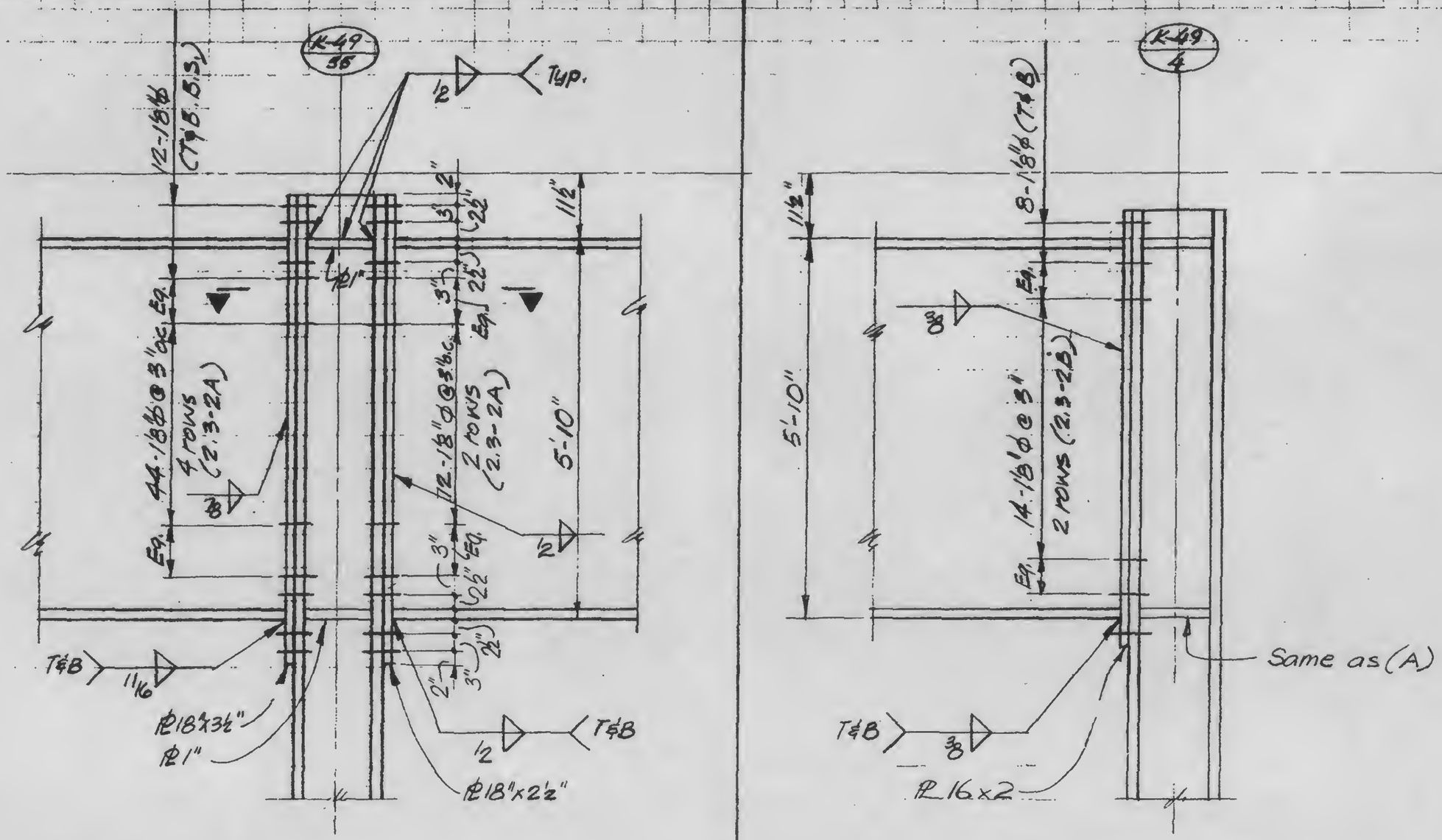

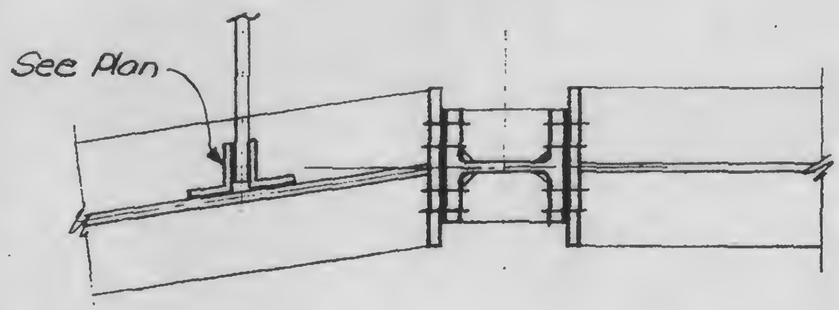

Note: All bolts A490X on this sheet.

LICENSED PROFESSIONAL ENGINEER — LESLIE E. ROBERTSON — No. 34360 — UNIVERSITY OF THE STATE OF NEW YORK

DESIGNED

DRAWN John G. Incus

REVIEWED

A | B

13-K2.4-10

SKILLING, HELLE, CHRISTIANSEN, ROBERTSON — Structural & Civil Engineers

PROJECT: THE WORLD TRADE CENTER

TITLE: GIRDER COLUMN DETAILS

DATE: 11-3-72

REVISIONS

Released for construction 11-20-72

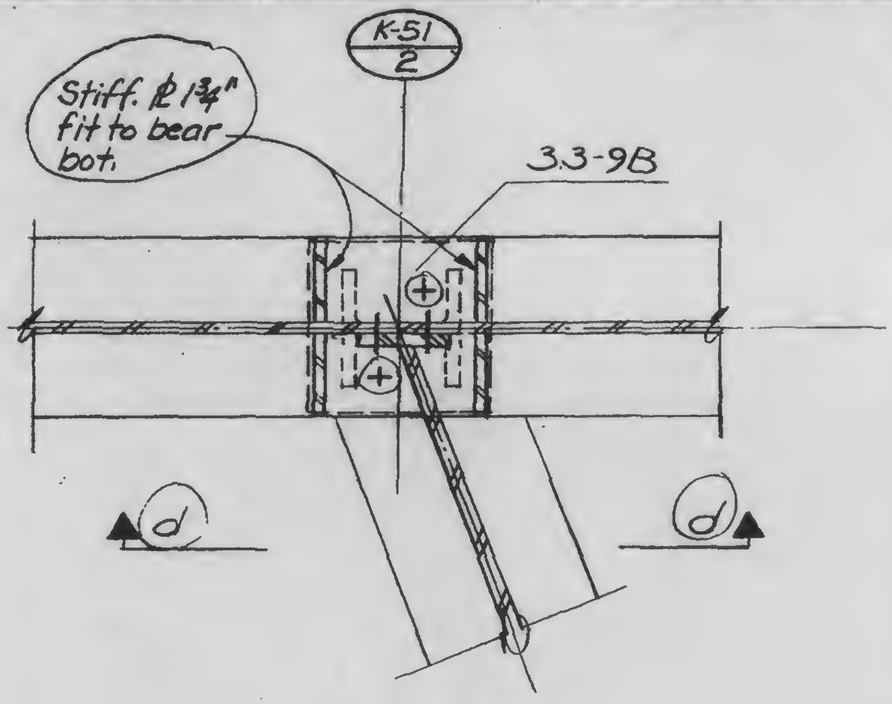

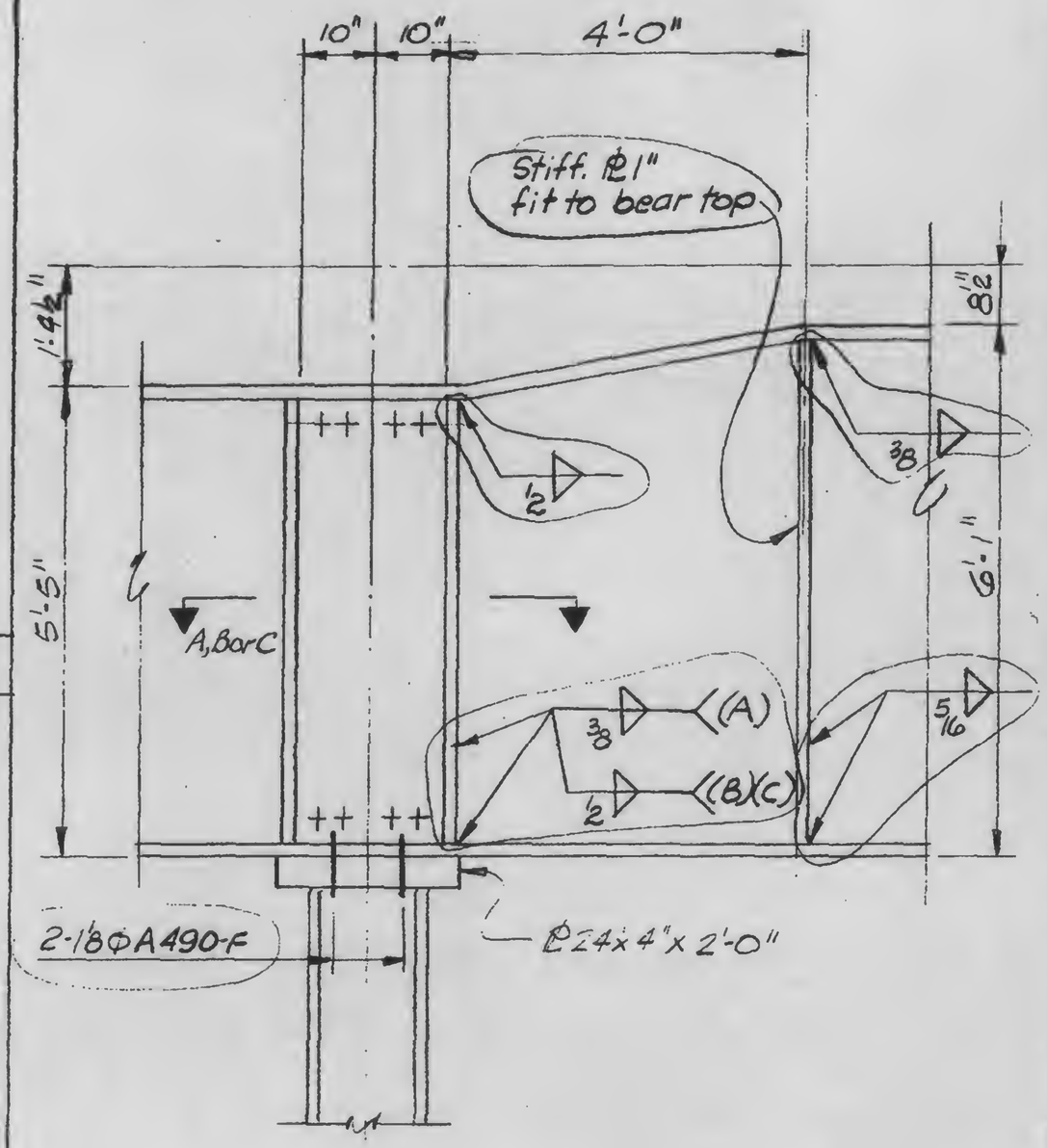

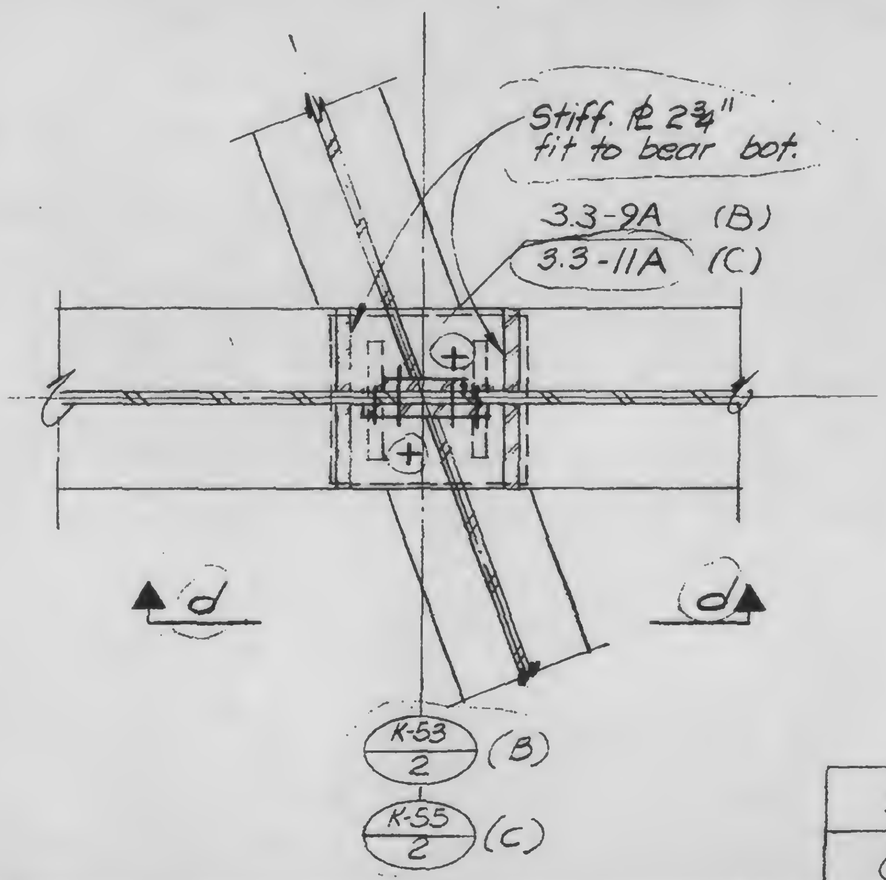

A

3

C

d

LICENSED PROFESSIONAL ENGINEER
LESLIE E. ROBERTSON
No. 34360
UNIVERSITY OF THE STATE OF NEW YORK

DESIGNED

DRAWN

REVIEWED

13-K2.4-11

SKILLING, HELLE, CHRISTIANSEN, ROBERTSON — Structural & Civil Engineers

PROJECT: THE WORLD TRADE CENTER

TITLE: GIRDER COLUMN DETAILS

DATE: 11-3-72

REVISIONS

General Revision Release for construction 11-20-72

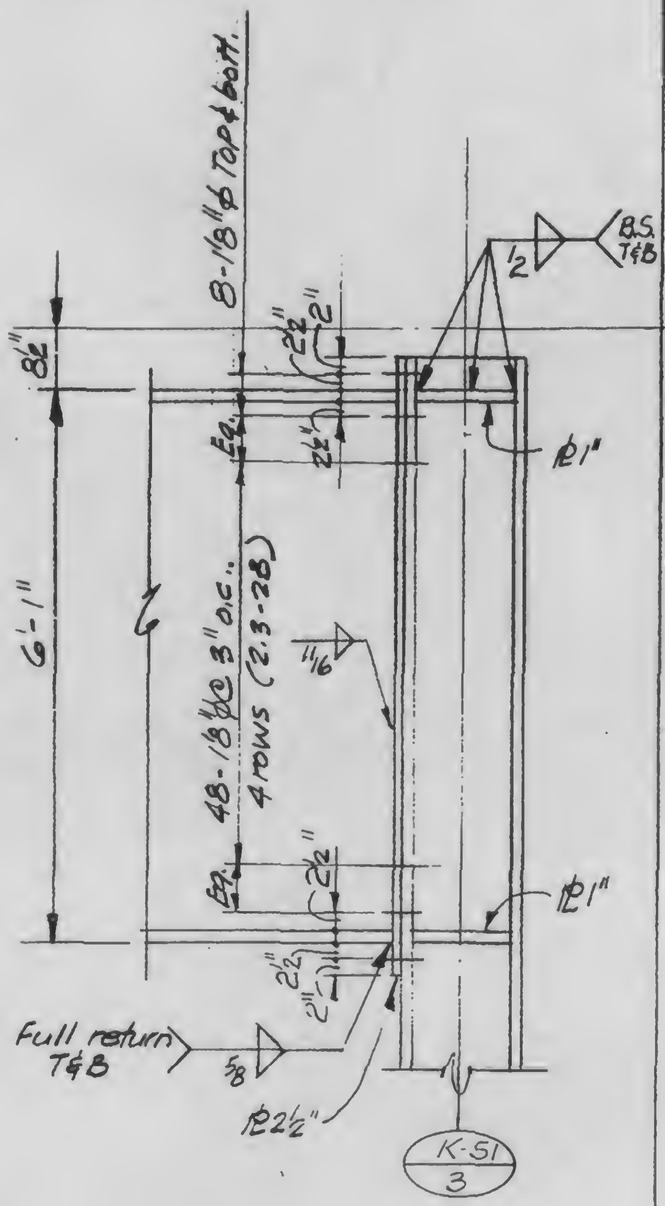

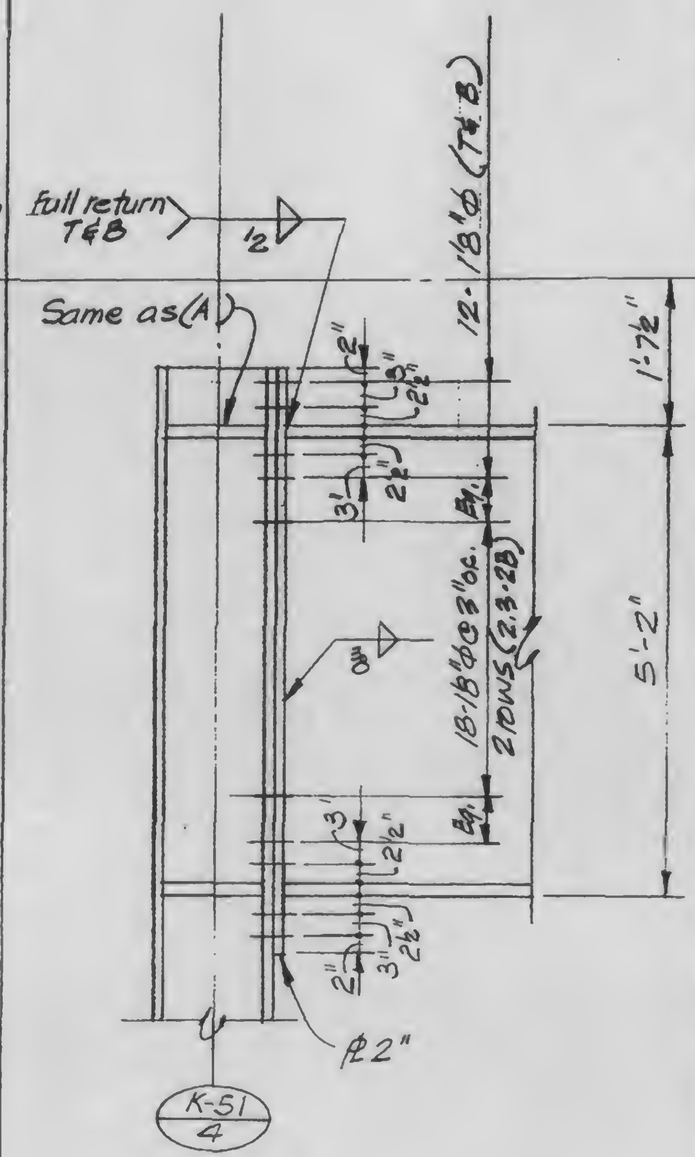

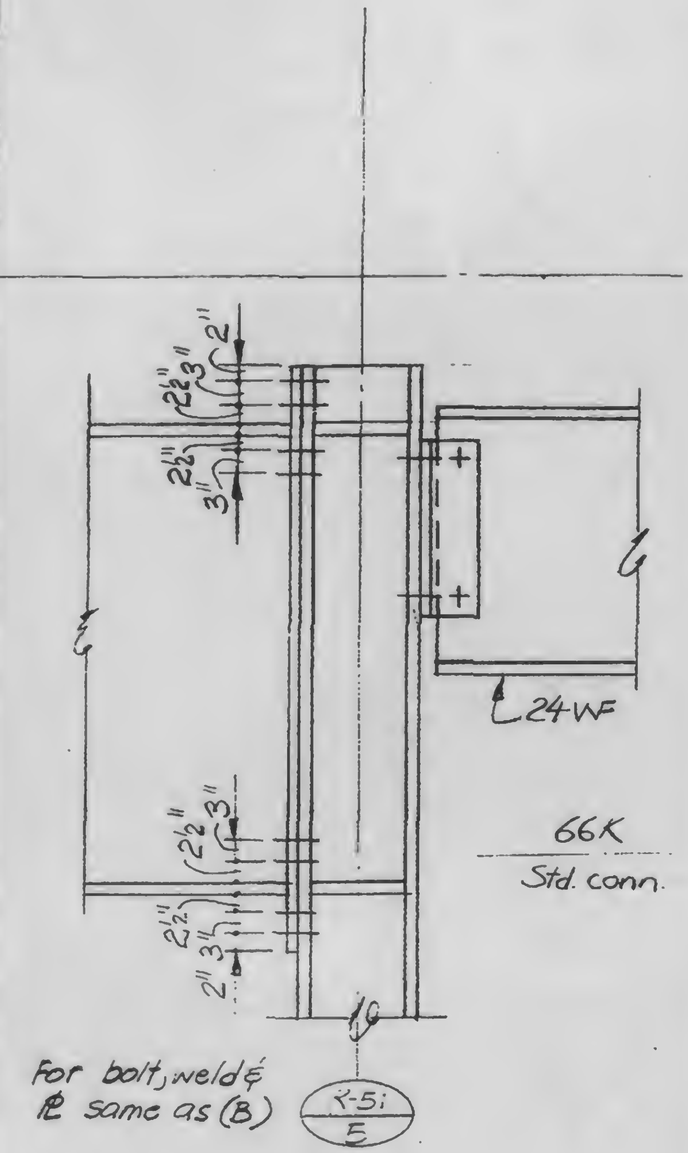

Note: All bolts A490X on this sheet

LICENSED PROFESSIONAL ENGINEER — LESLIE E. ROBERTSON — No 34360 — UNIVERSITY OF THE STATE OF NEW YORK

DESIGNED

DRAWN

REVIEWED

A | B | C

3-K 2,4-12

SKILLING, HELLE, CHRISTIANSEN, ROBERTSON — Structural & Civil Engineers

PROJECT: THE WORLD TRADE CENTER

TITLE: GIRDER COLUMN DETAILS

DATE: 11-3-72

REVISIONS

General Revision Release for Construction 11-20-72

4-20-73

Note: All bolts A490X on this sheet

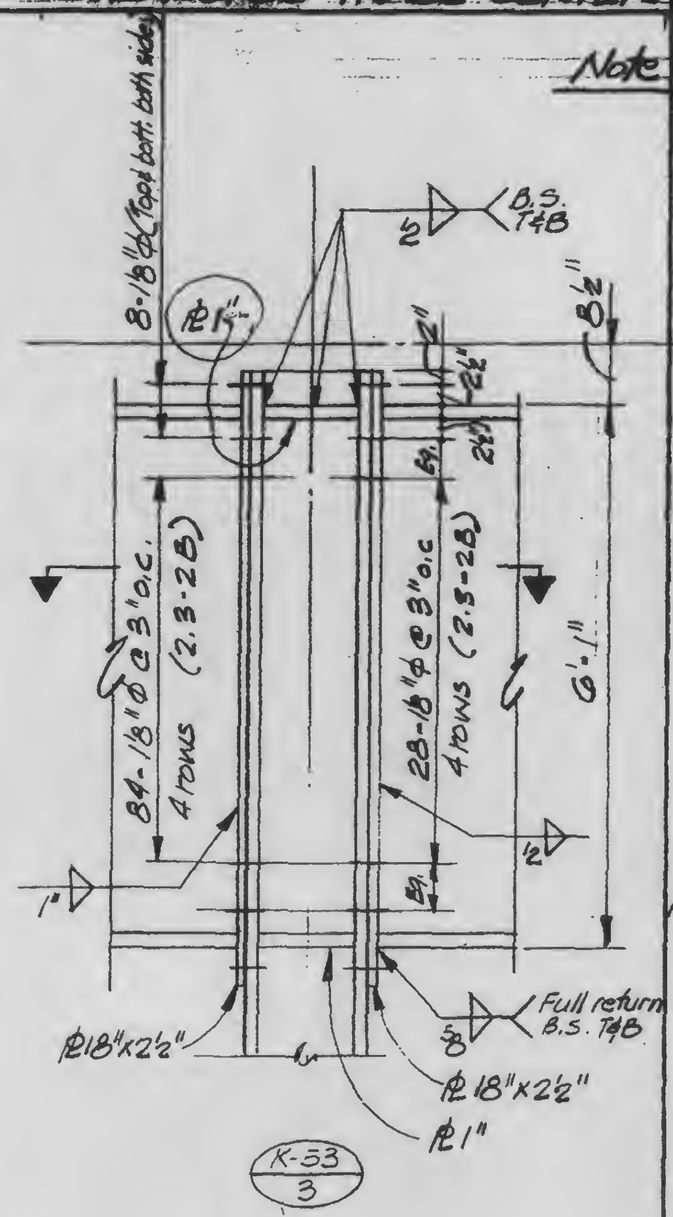

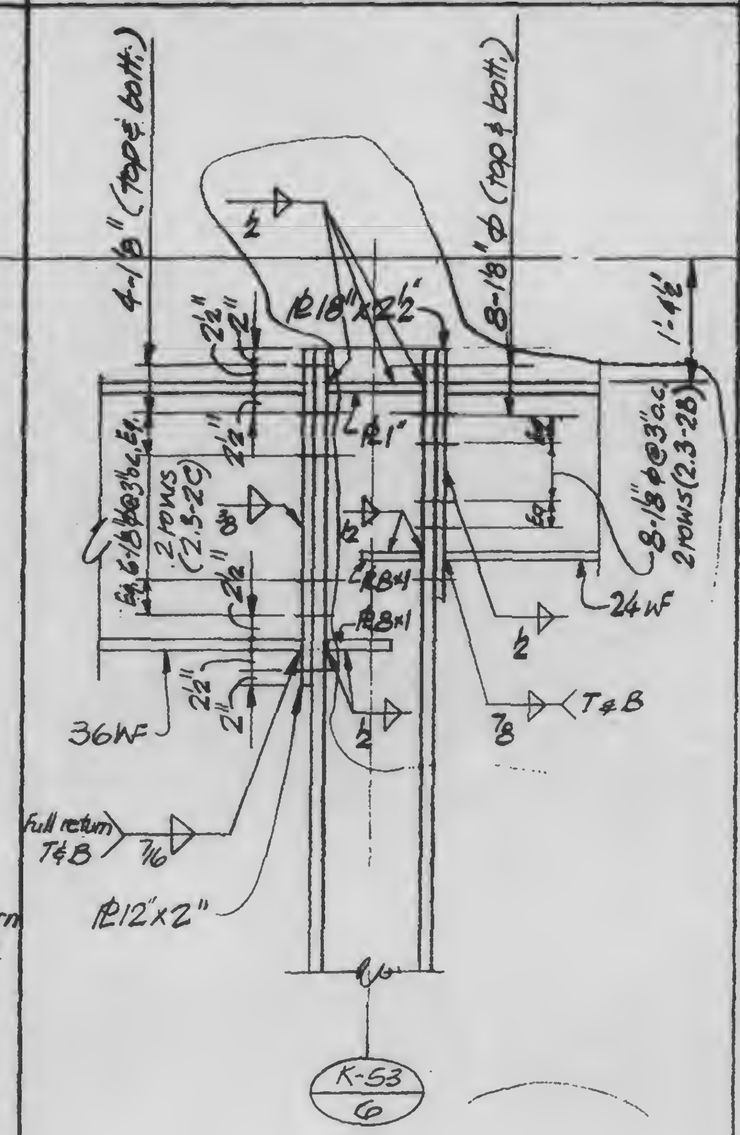

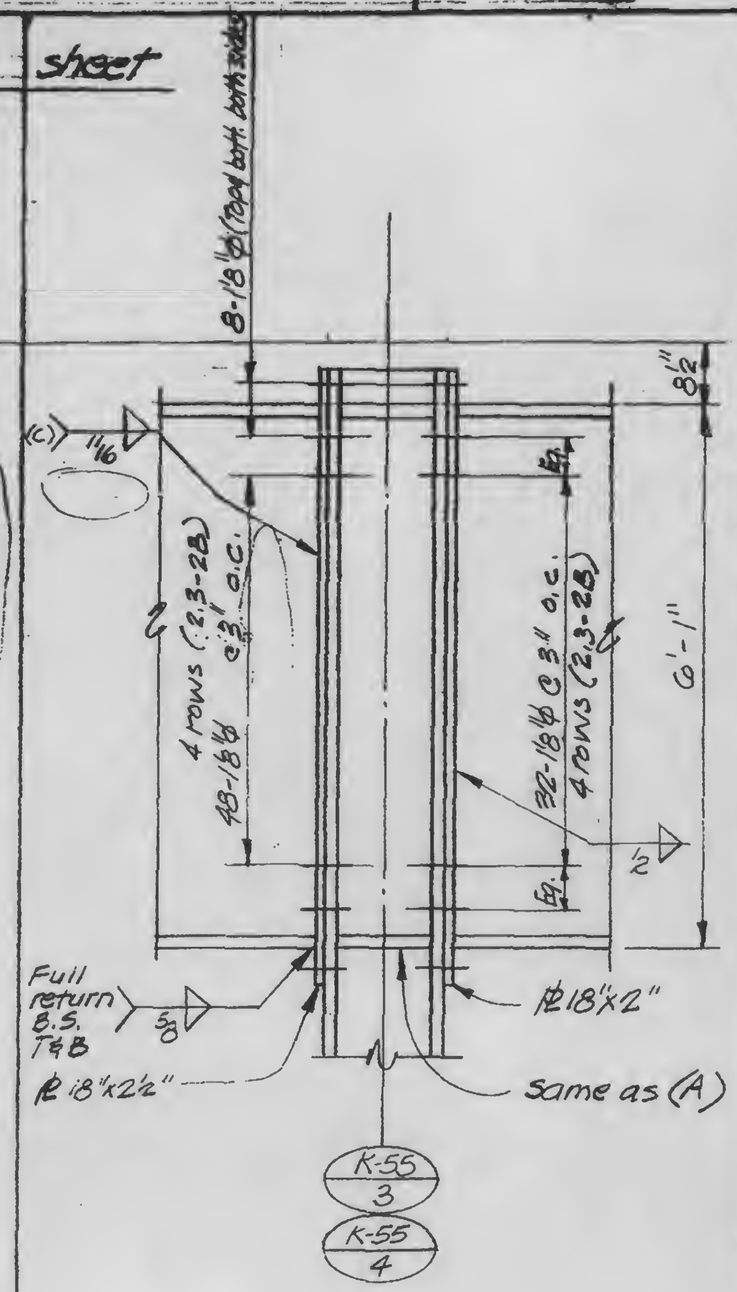

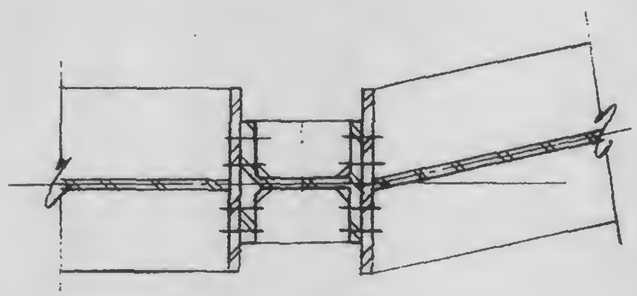

A

B

C

LICENSED PROFESSIONAL ENGINEER — LESLIE E. ROBERTSON — No. 34960 — UNIVERSITY OF THE STATE OF NEW YORK

DESIGNED: K. Chiang

DRAWN: [illegible]

REVIEWED

13-K2.4-13

SKILLING, HELLE, CHRISTIANSEN, ROBERTSON — Structural & Civil Engineers

PROJECT: THE WORLD TRADE CENTER

TITLE: GIRDER COLUMNS DETAILS

DATE: 11-3-72

REVISIONS

RELEASE FOR CONSTRUCTION 11-20-72

4-20-73

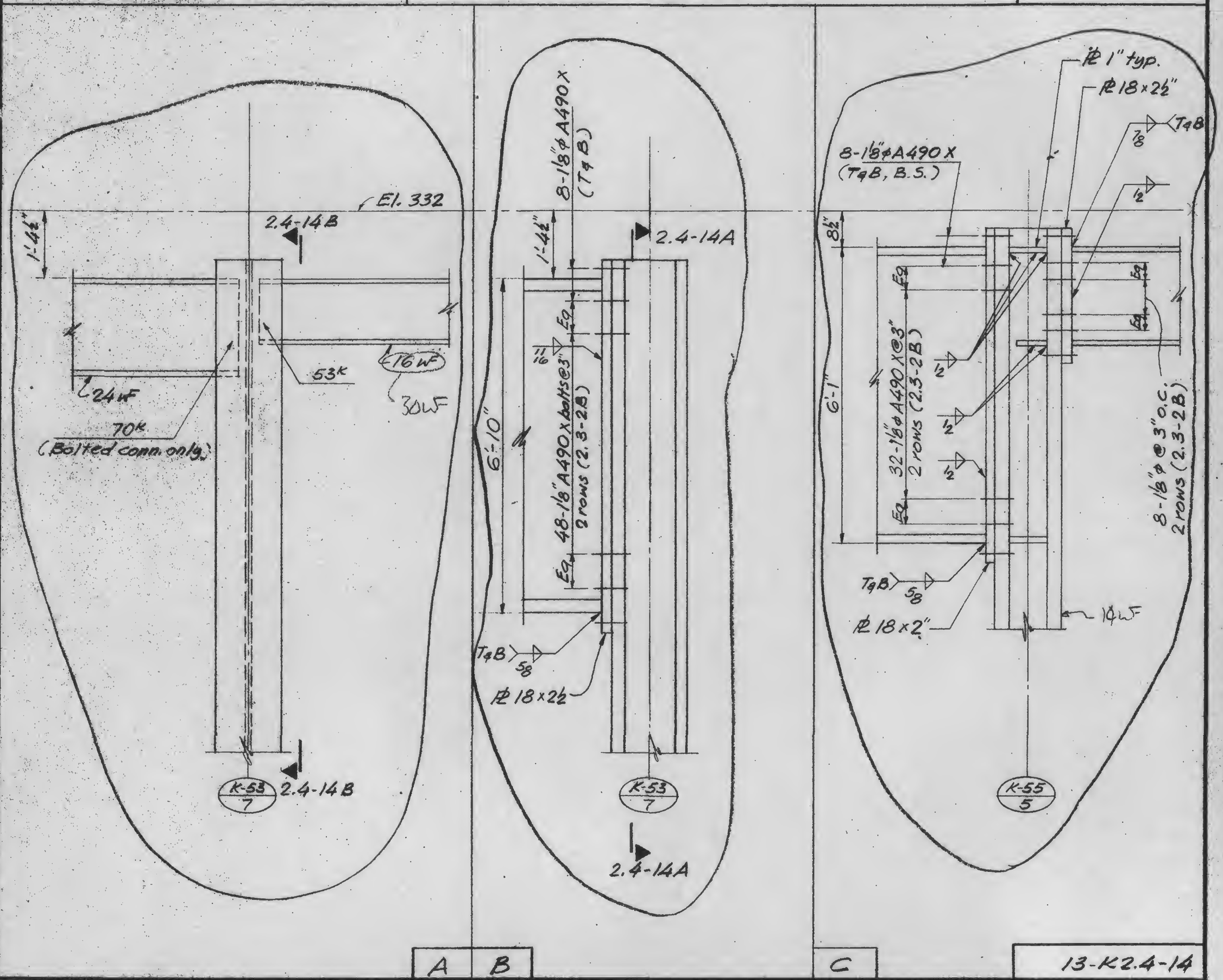

LICENSED PROFESSIONAL ENGINEER — LESLIE E. ROBERTSON — No. 34360 — UNIVERSITY OF THE STATE OF NEW YORK

DESIGNED K. Chiang

DRAWN John Grauing

REVIEWED

SKILLING, HELLE, CHRISTIANSEN, ROBERTSON — Structural & Civil Engineers

PROJECT: THE WORLD TRADE CENTER

TITLE: GIRDER COLUMNS DETAILS

DATE: 11-3-72

REVISIONS

RELEASE FOR CONSTRUCTION 11-20-72

4-20-73

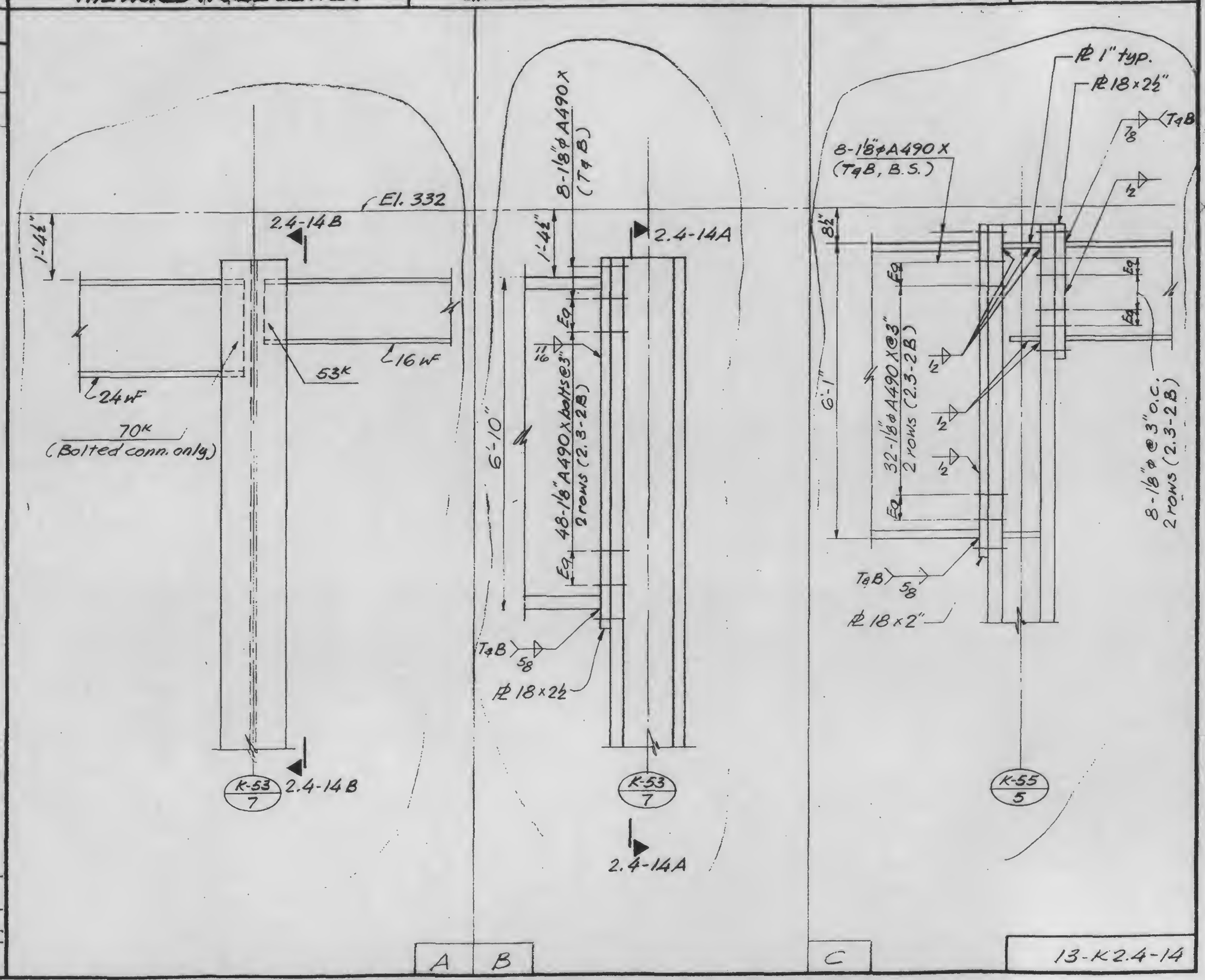

LICENSED PROFESSIONAL ENGINEER — LESLIE E. ROBERTSON — No. 34360 — UNIVERSITY OF THE STATE OF NEW YORK

DESIGNED: K. Chiang

DRAWN: [illegible]

REVIEWED

A | B | C

13-K2.4-14

SKILLING, HELLE, CHRISTIANSEN, ROBERTSON — Structural & Civil Engineers

PROJECT: THE WORLD TRADE CENTER | TITLE: GIRDER COLUMN DETAILS | DATE: 11-20-72

REVISIONS

Released for construction 11-20-72

12-11-72

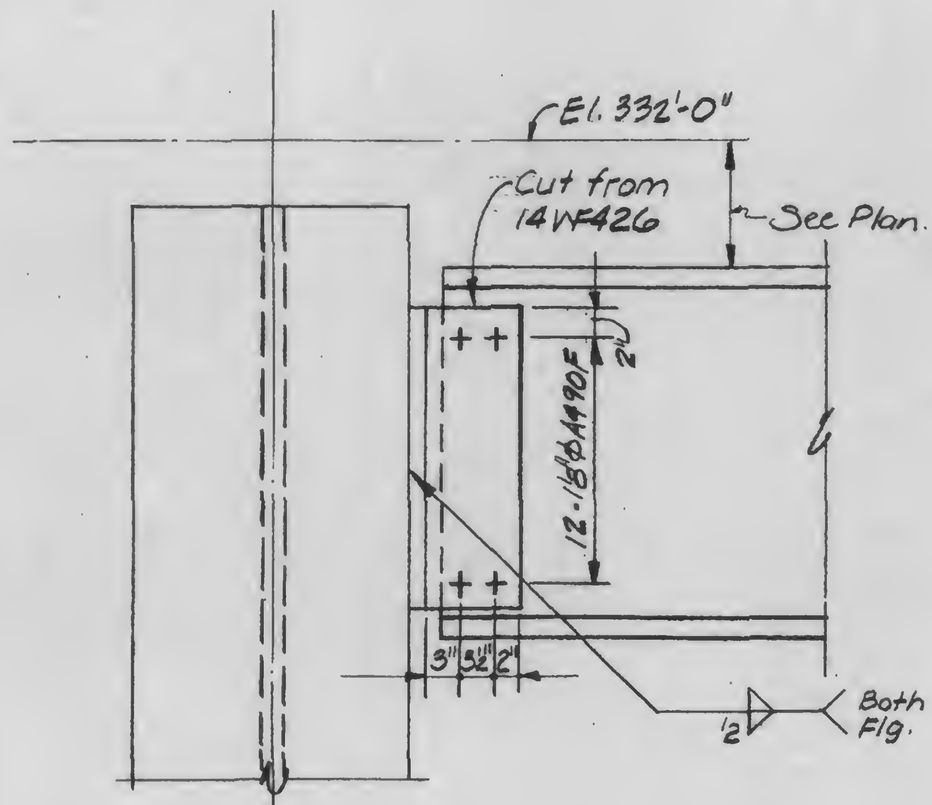

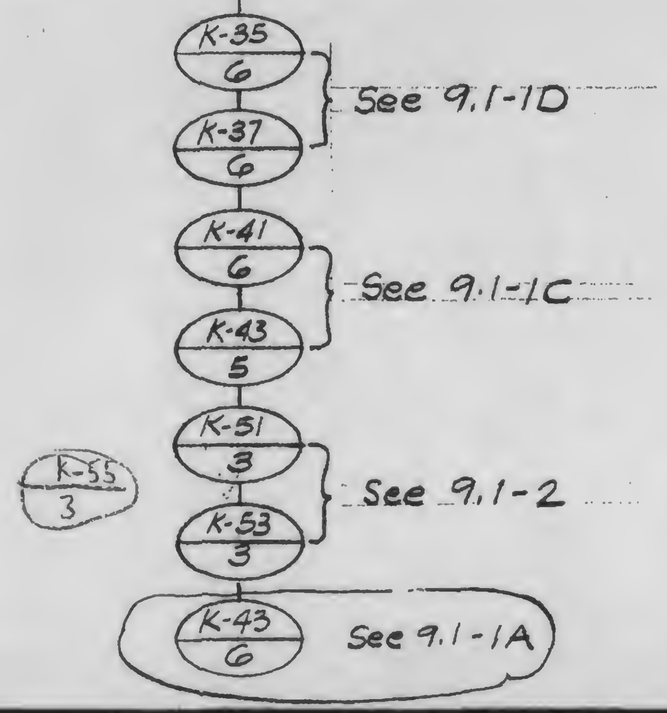

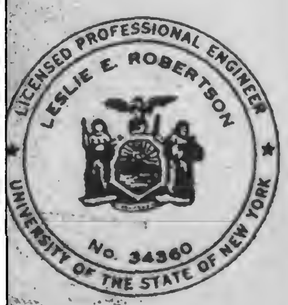

SIGNED

DRAWN

REVIEWED

13-K2.4-15

SKILLING, HELLE, CHRISTIANSEN, ROBERTSON — Structural & Civil Engineers

PROJECT: THE WORLD TRADE CENTER

TITLE: GIRDER COLUMN DETAILS

DATE: 11-20-72

REVISIONS

Released for construction 11-20-72

12-11-72

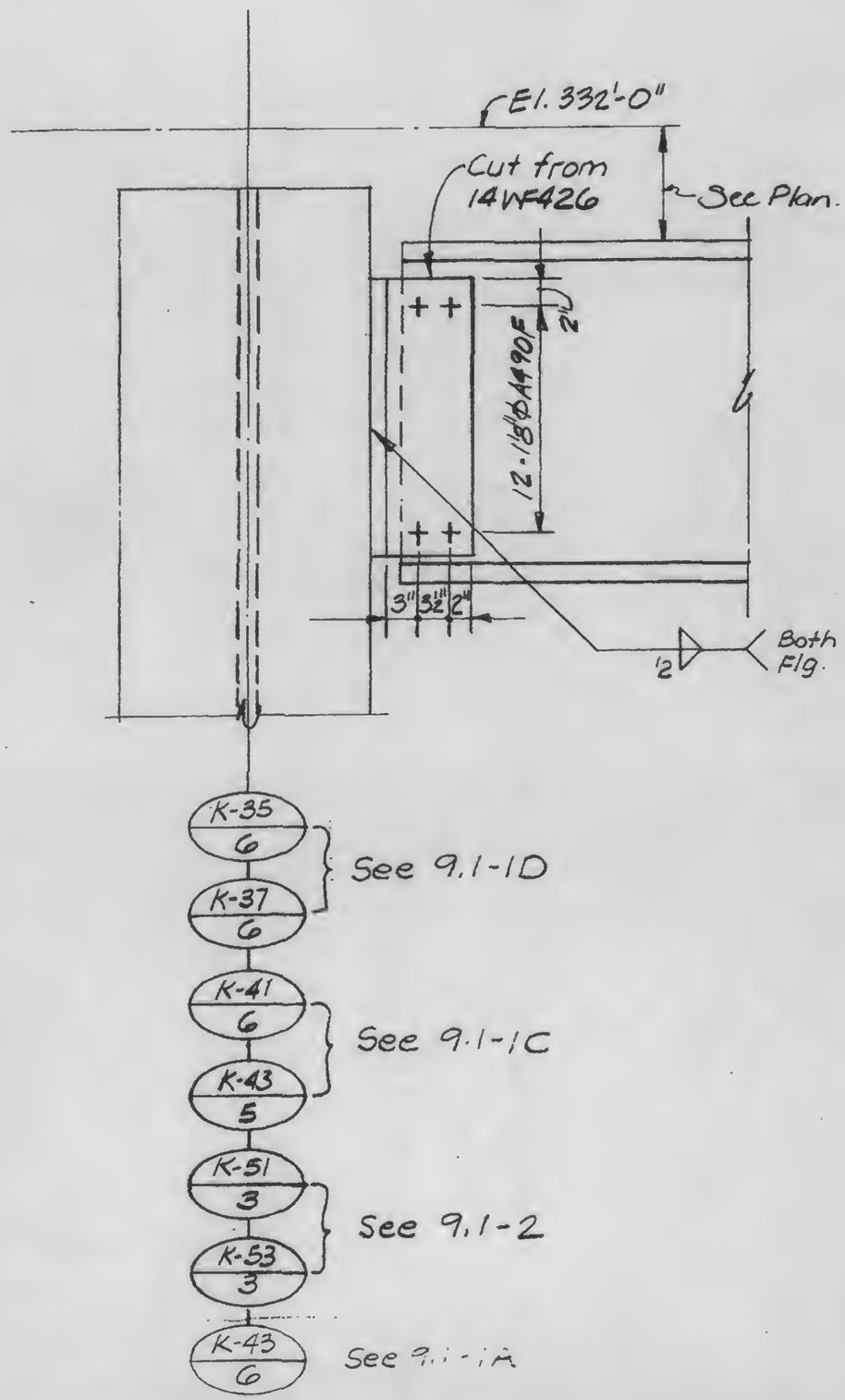

LICENSED PROFESSIONAL ENGINEER — LESLIE E. ROBERTSON — No. 34360 — UNIVERSITY OF THE STATE OF NEW YORK

DESIGNED

DRAWN

REVIEWED

3-K2.4-15

SKILLING, HELLE, CHRISTIANSEN, ROBERTSON — Structural & Civil Engineers

PROJECT: THE WORLD TRADE CENTER

TITLE: GIRDER COLUMN DETAIL

DATE: 4-20-73

REVISIONS

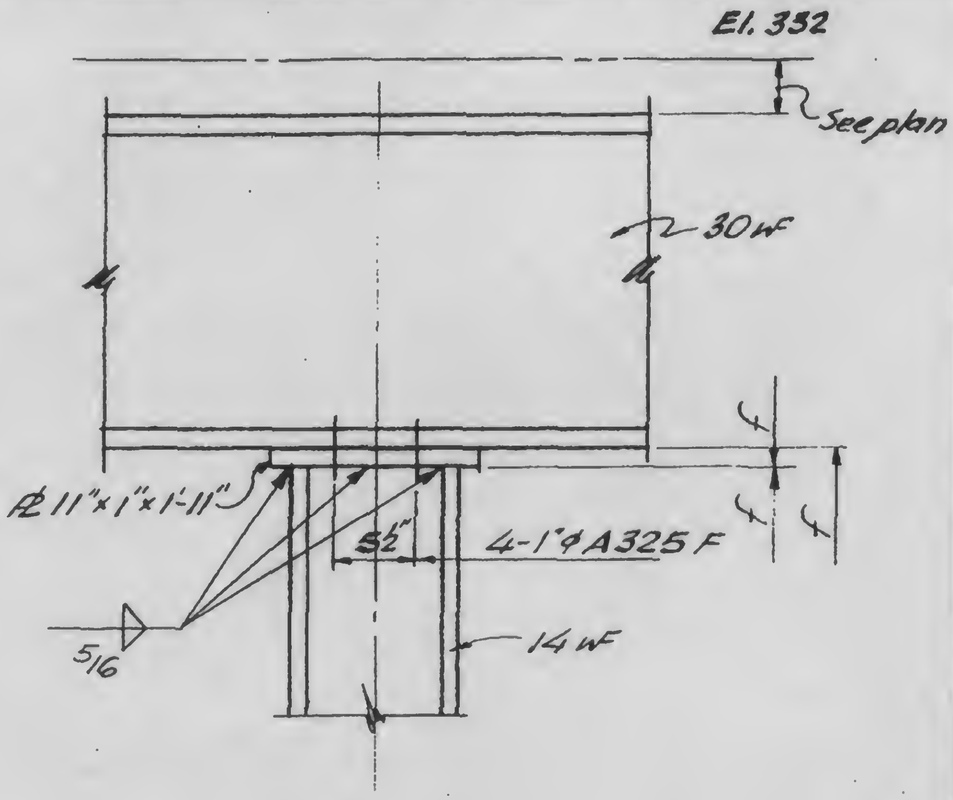

A

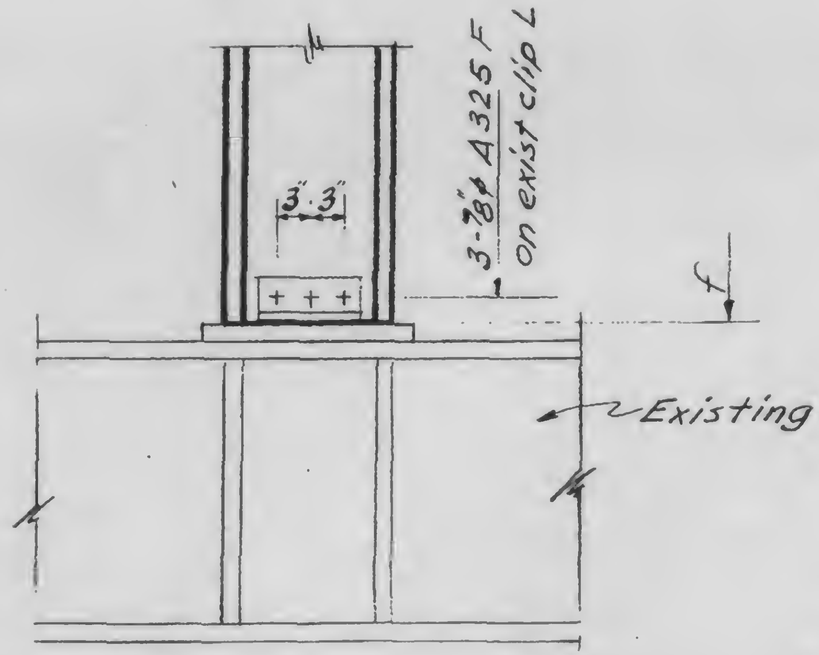

B

LICENSED PROFESSIONAL ENGINEER
LESLIE E. ROBERTSON
No. 34360
UNIVERSITY OF THE STATE OF NEW YORK

DESIGNED: K. Chiang

DRAWN

REVIEWED

13·K2.4-16

SKILLING, HELLE, CHRISTIANSEN, ROBERTSON — Structural & Civil Engineers

PROJECT: THE WORLD TRADE CENTER

TITLE: GIRDER-FUTURE COLUMN DETAILS

DATE: 11-3-72

REVISIONS

RELEASE FOR CONSTRUCTION 11-20-72

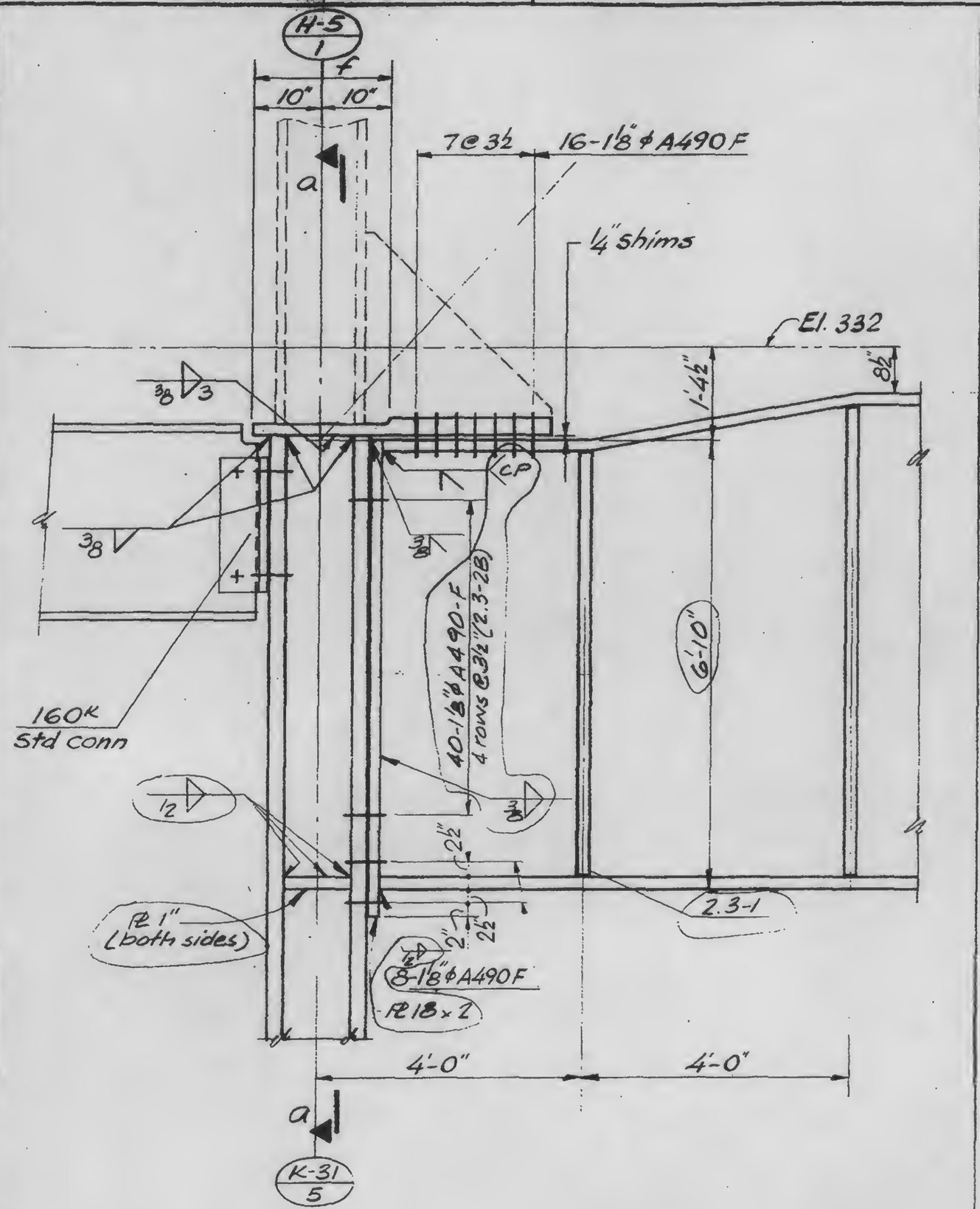

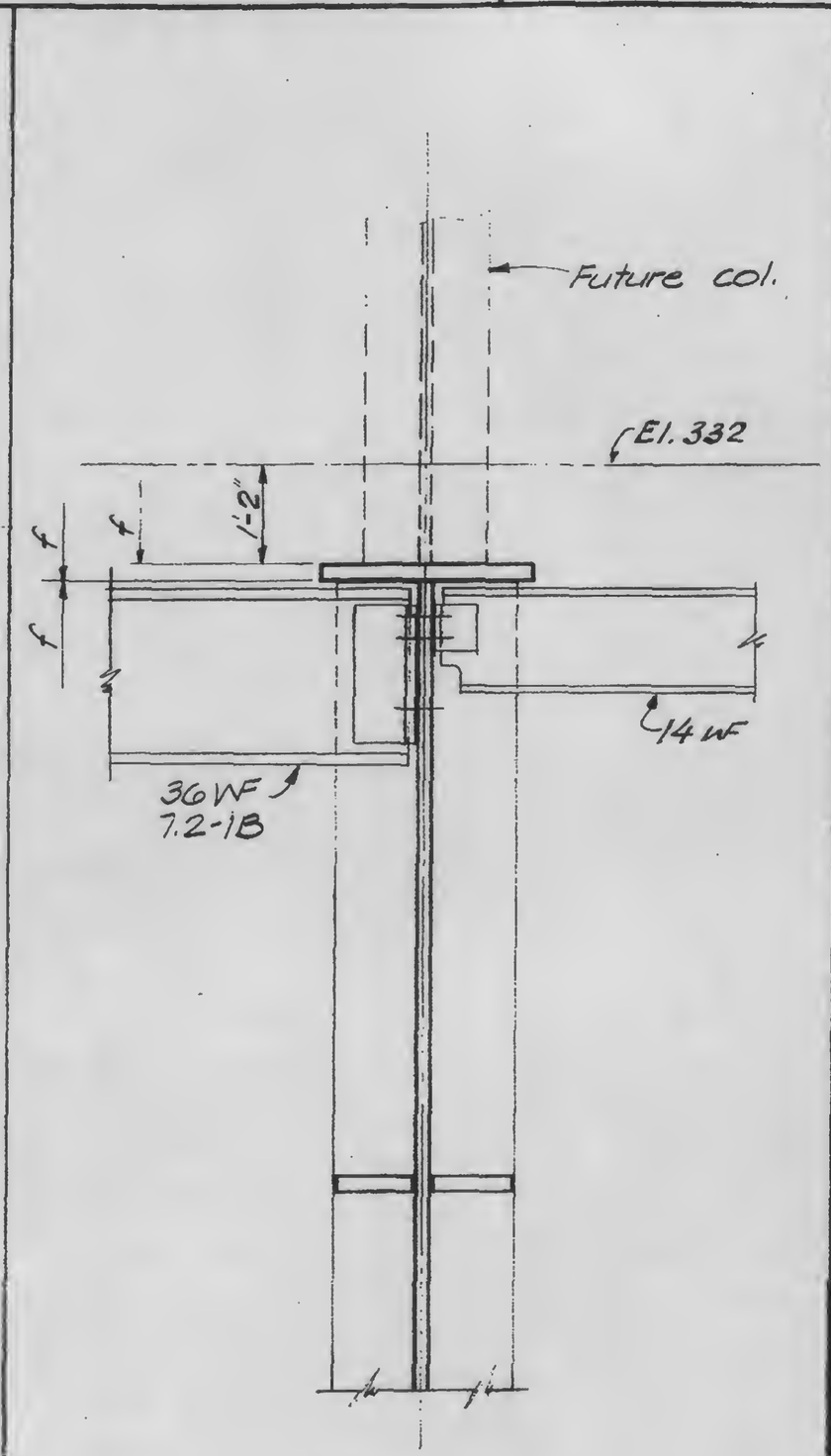

LICENSED PROFESSIONAL ENGINEER — LESLIE E. ROBERTSON — No. 34360 — UNIVERSITY OF THE STATE OF NEW YORK

DESIGNED

DRAWN John Grieco

REVIEWED

A | a

13-K2.5-1

SKILLING, HELLE, CHRISTIANSEN, ROBERTSON — Structural & Civil Engineers

PROJECT: THE WORLD TRADE CENTER

TITLE: GIRDER - FUTURE COLUMN DETAILS

DATE: 1-3-72

REVISIONS

RELEASE FOR CONSTRUCTION 11-20-72

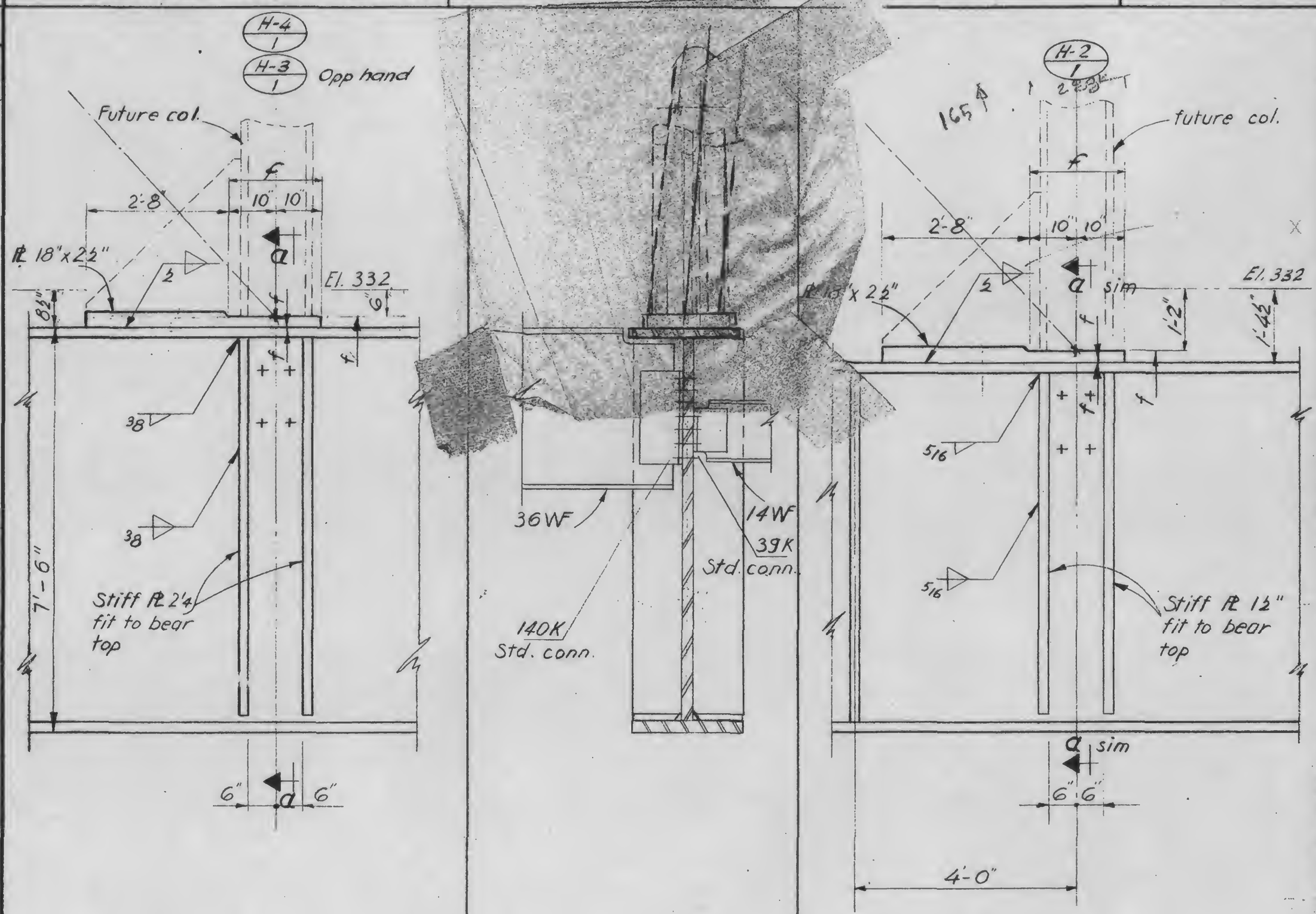

LICENSED PROFESSIONAL ENGINEER — LESLIE E. ROBERTSON — No 34360 — UNIVERSITY OF THE STATE OF NEW YORK

DESIGNED

DRAWN John Grieves

REVIEWED

A | a | B

13-K2.5-2

SKILLING, HELLE, CHRISTIANSEN, ROBERTSON — Structural & Civil Engineers

PROJECT: THE WORLD TRADE CENTER

TITLE: GIRDER - FUTURE COLUMN DETAILS

DATE: 1-3-72

REVISIONS

RELEASE FOR CONSTRUCTION 11-20-72

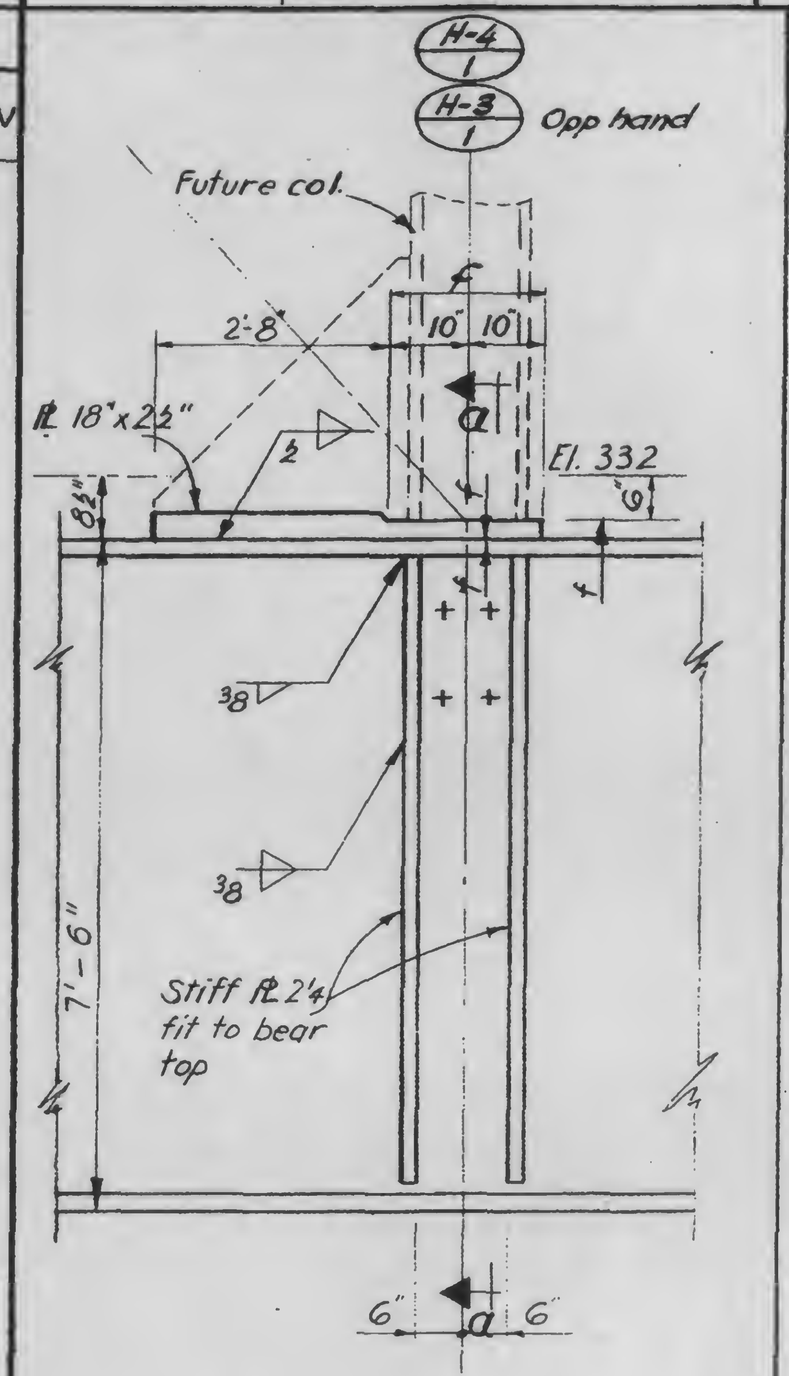

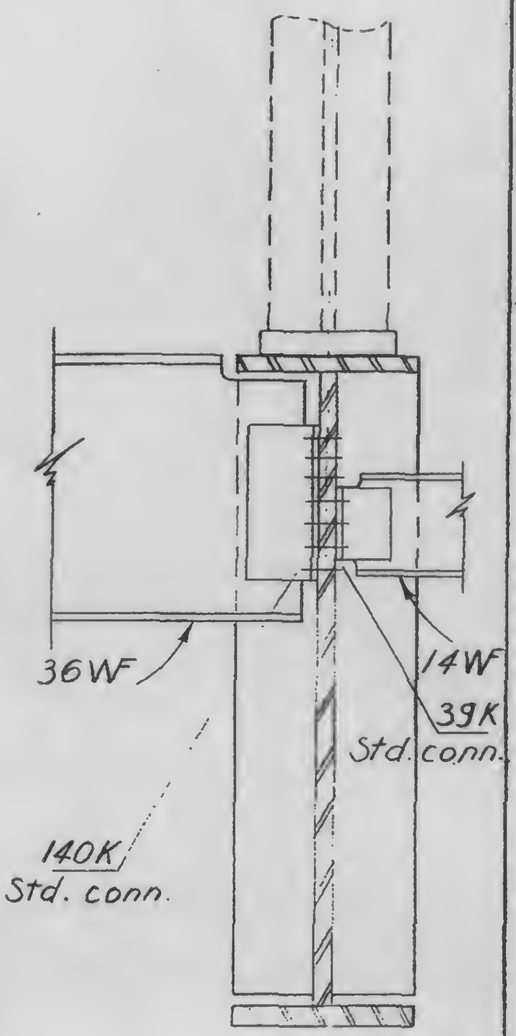

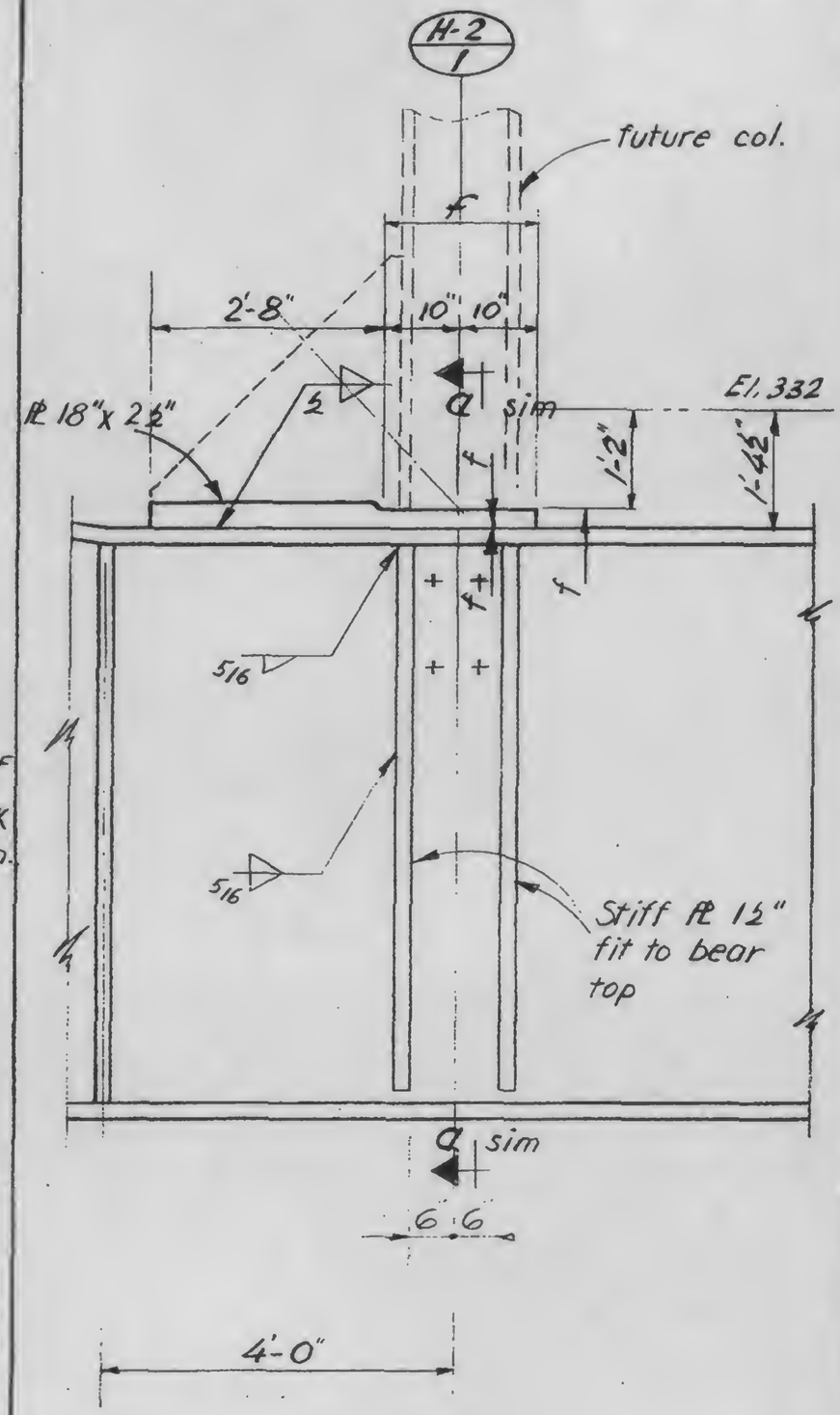

LICENSED PROFESSIONAL ENGINEER — LESLIE E. ROBERTSON — No. 34360 — UNIVERSITY OF THE STATE OF NEW YORK

DESIGNED

DRAWN John Gravina

REVIEWED

A | a | B

13-K2.5-2

SKILLING, HELLE, CHRISTIANSEN, ROBERTSON — Structural & Civil Engineers

PROJECT: THE WORLD TRADE CENTER

TITLE: GIRDER-FUTURE COLUMN DETAILS

DATE: 11-3-72

REVISIONS

RELEASE FOR CONSTRUCTION 11-20-72

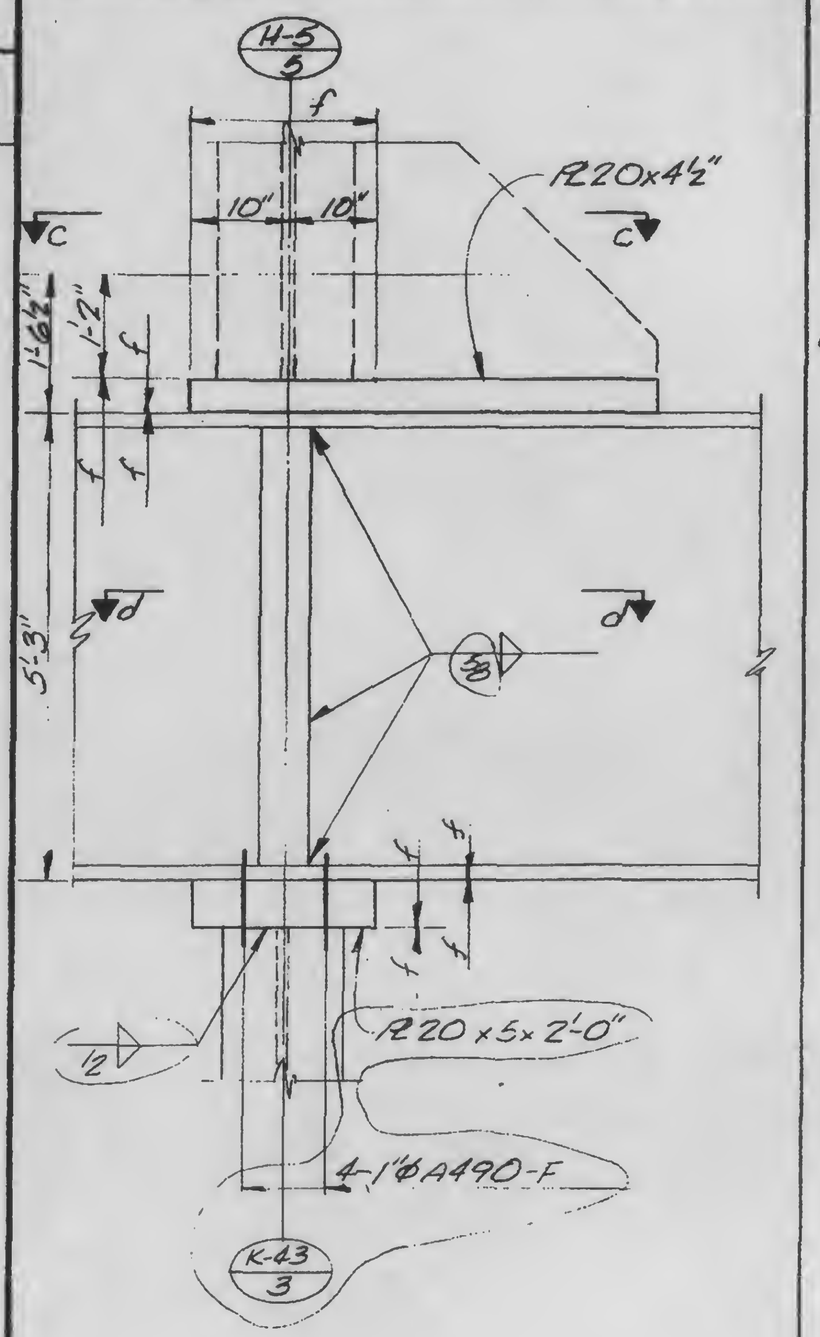

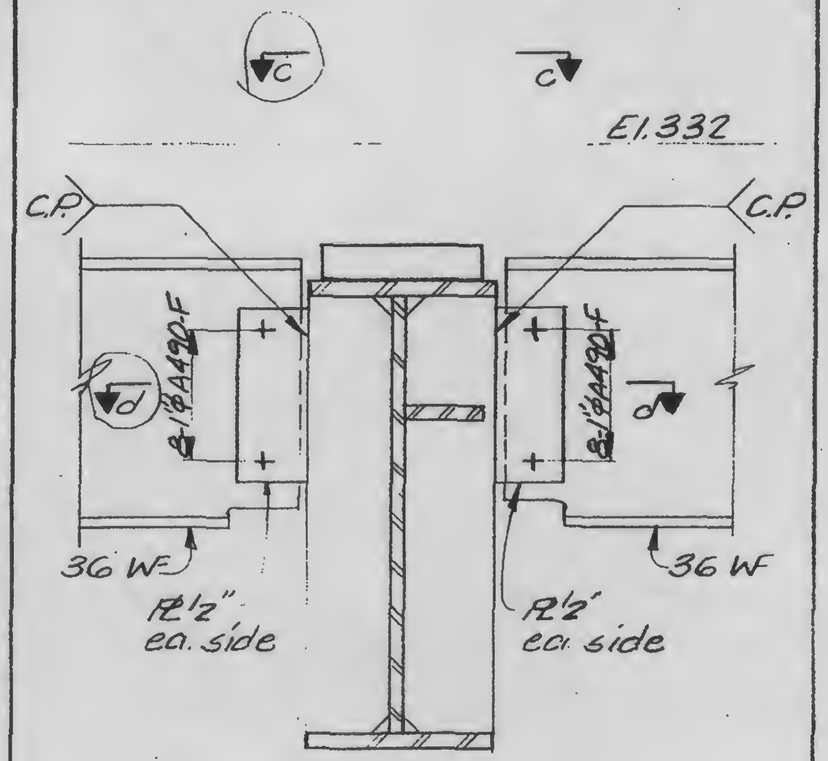

a

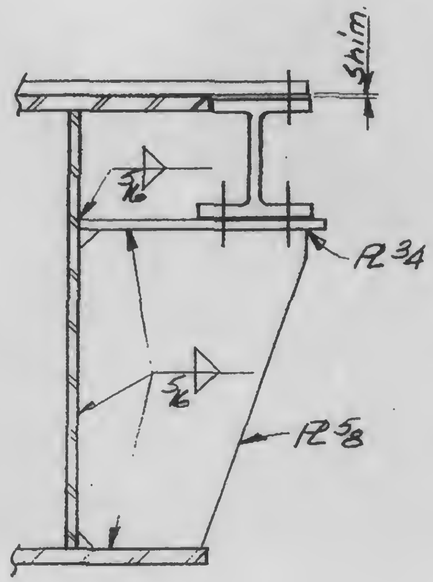

b

LICENSED PROFESSIONAL ENGINEER — LESLIE E. ROBERTSON — No. 34360 — UNIVERSITY OF THE STATE OF NEW YORK

DESIGNED

DRAWN TR

REVIEWED

13-K2.5-3.1

SKILLING, HELLE, CHRISTIANSEN, ROBERTSON — Structural & Civil Engineers

PROJECT: THE WORLD TRADE CENTER

TITLE: GIRDER - FUTURE COLUMN DETAILS

DATE: 11-3-72

REVISIONS

RELEASE FOR CONSTRUCTION 11-20-72

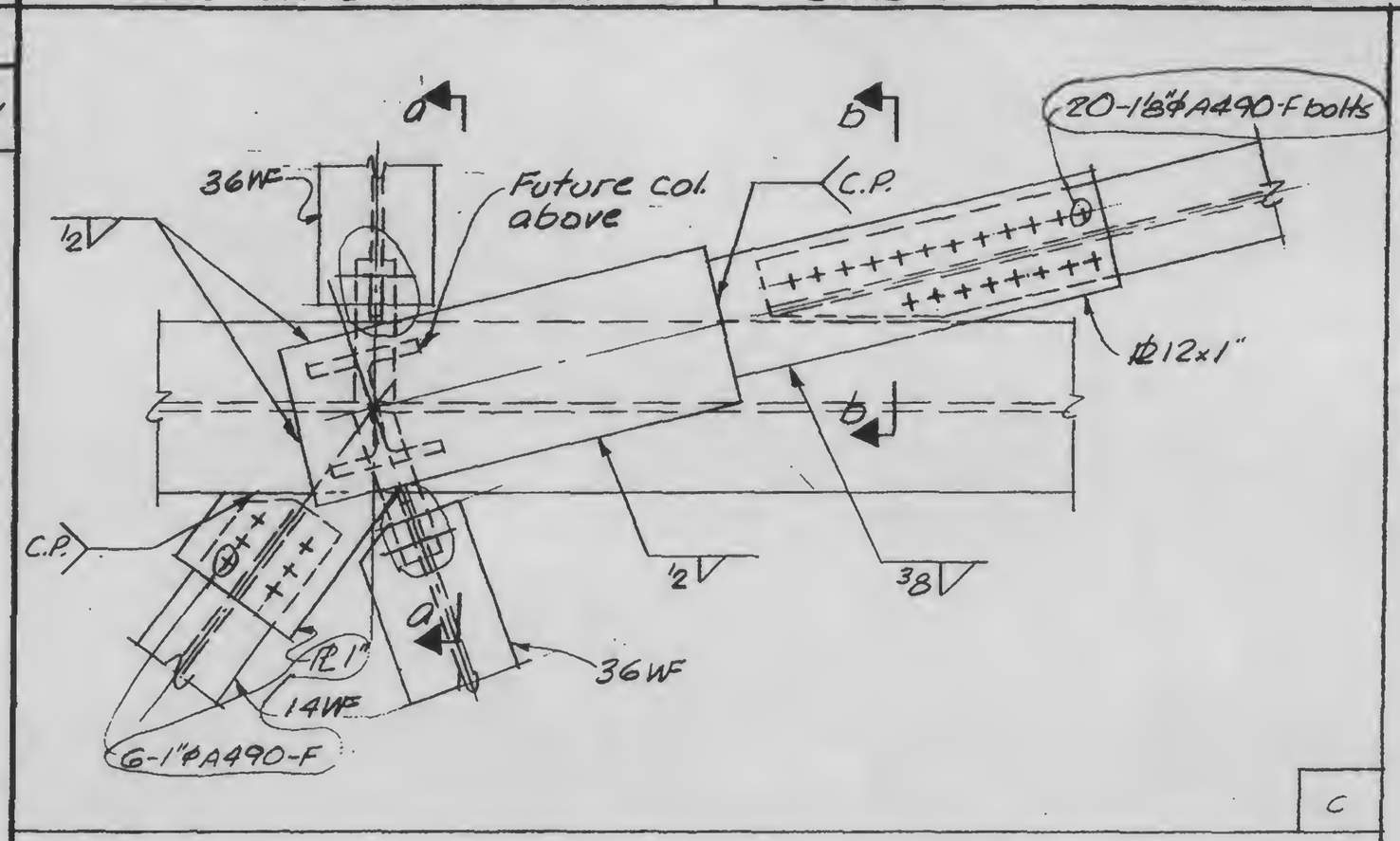

c

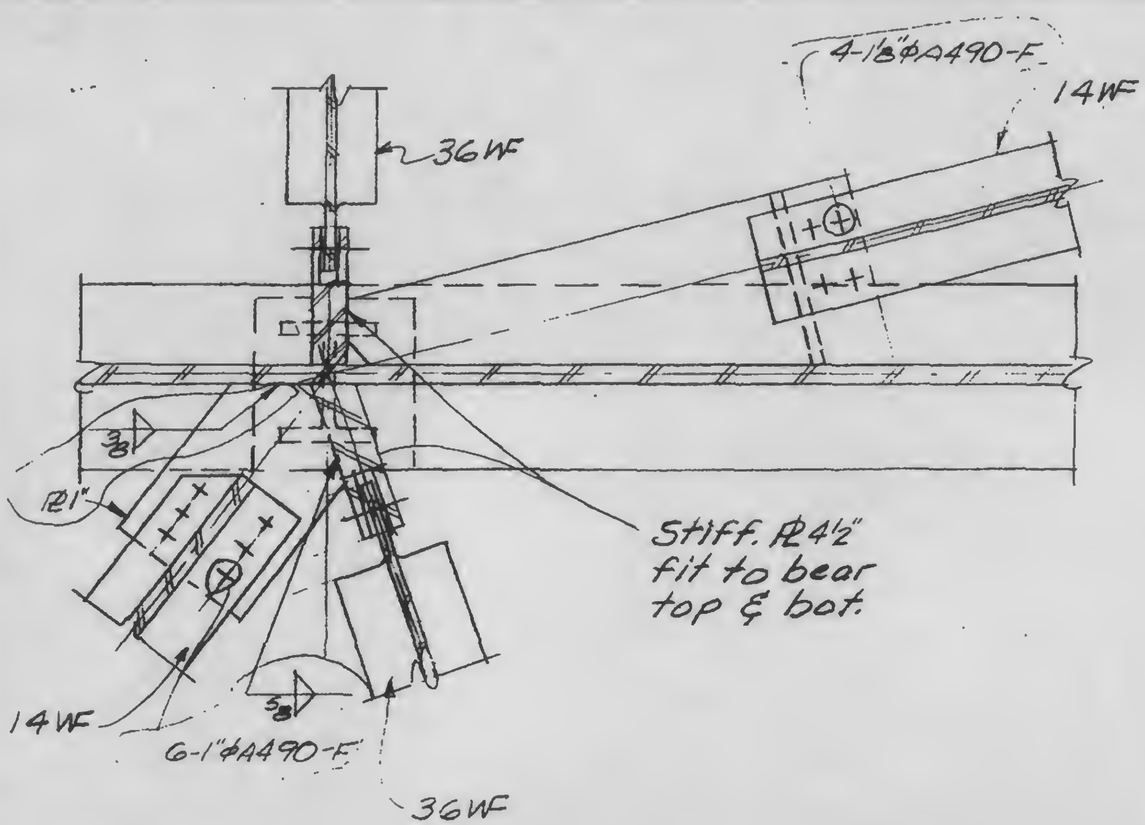

d

LICENSED PROFESSIONAL ENGINEER — LESLIE E. ROBERTSON — No 34360 — UNIVERSITY OF THE STATE OF NEW YORK

DESIGNED

DRAWN A.L. Franqui

REVIEWED

13-K2.5-3.2

SKILLING, HELLE, CHRISTIANSEN, ROBERTSON — Structural & Civil Engineers

PROJECT: THE WORLD TRADE CENTER

TITLE: GIRDER - FUTURE COLUMN DETAILS

DATE: 11-3-72

REVISIONS

RELEASE FOR CONSTRUCTION 11-20-72

6-20-73

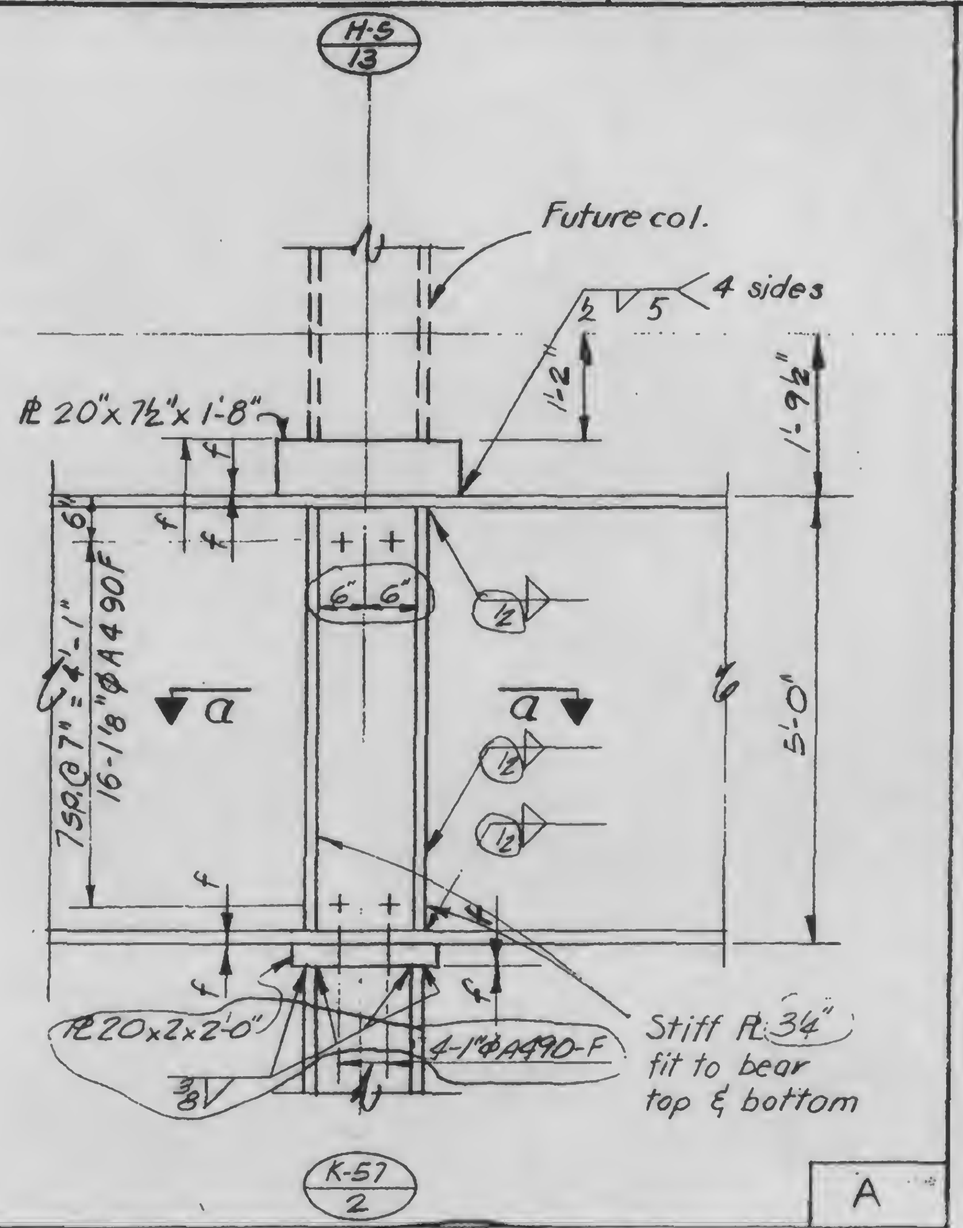

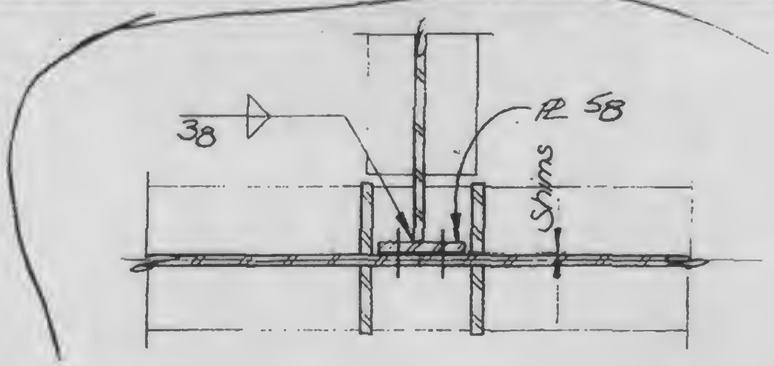

LICENSED PROFESSIONAL ENGINEER
LESLIE E. ROBERTSON
No. 34360
UNIVERSITY OF THE STATE OF NEW YORK

DESIGNED

DRAWN

REVIEWED

13-K2.5-4

SKILLING, HELLE, CHRISTIANSEN, ROBERTSON — Structural & Civil Engineers

PROJECT: THE WORLD TRADE CENTER

TITLE: GIRDER-FUTURE COLUMN DETAILS

DATE: 11-3-73

REVISIONS

- General Revision Released for Construction 11-20-72
- 12-11-72
- 4-20-73
- 6-20-73

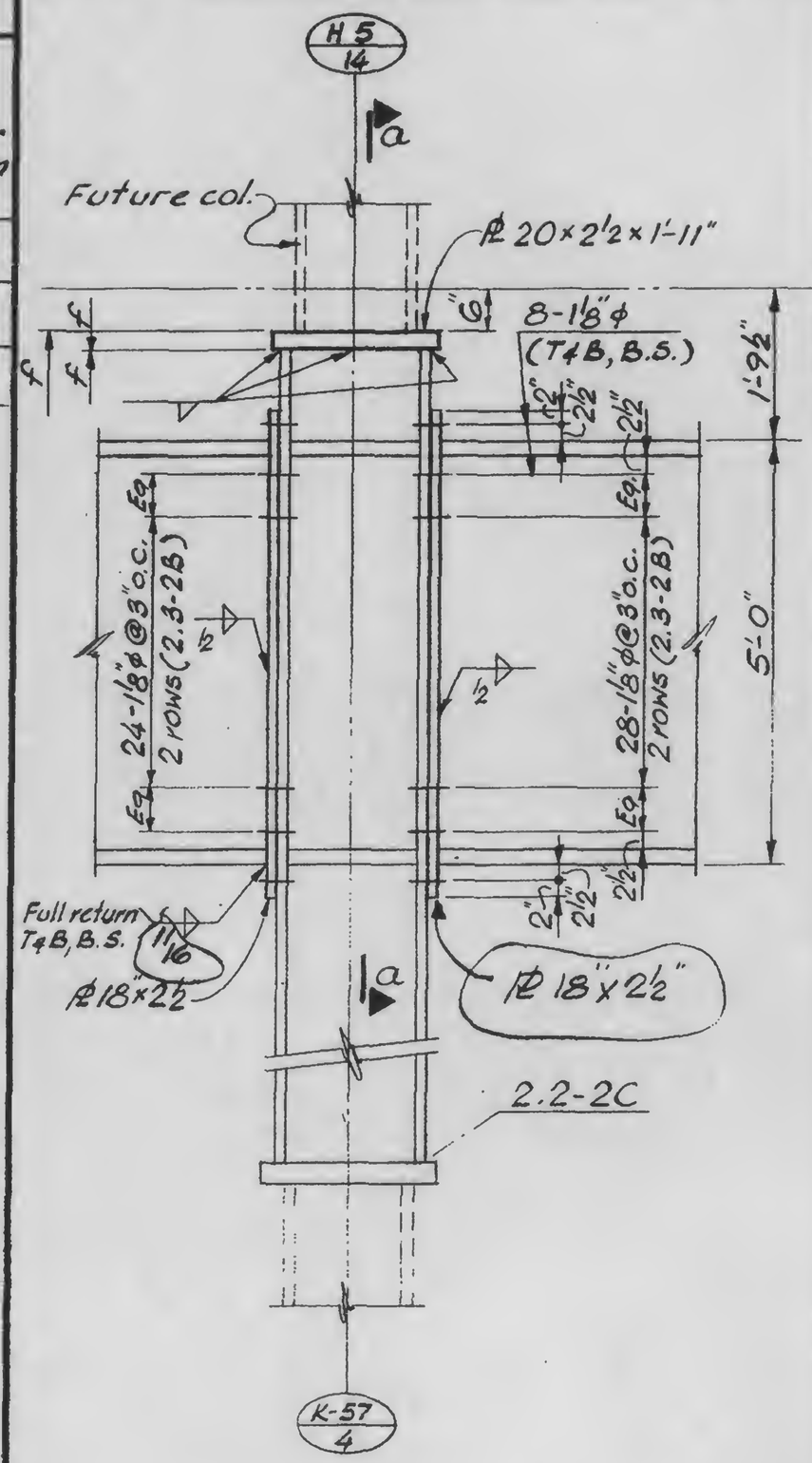

Note:
All bolts to be A490 X

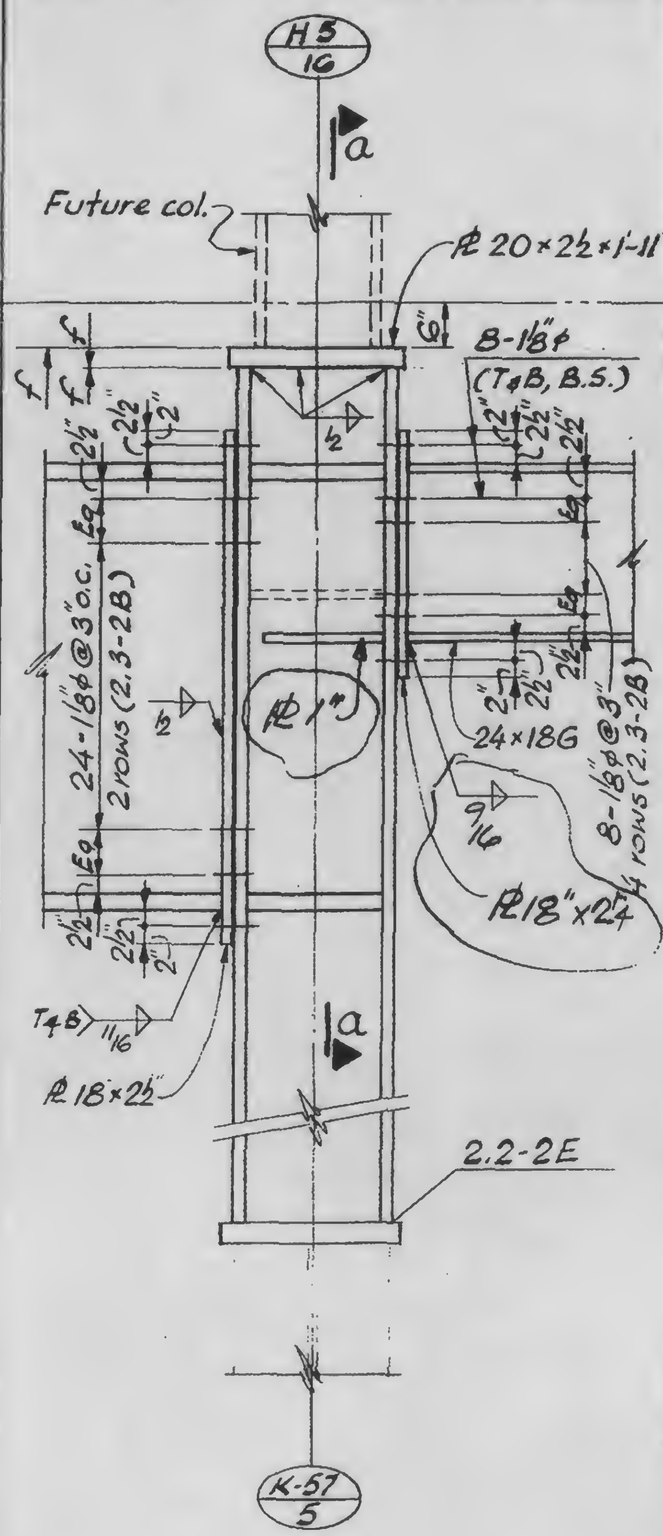

Note:
All bolts to be A490 X

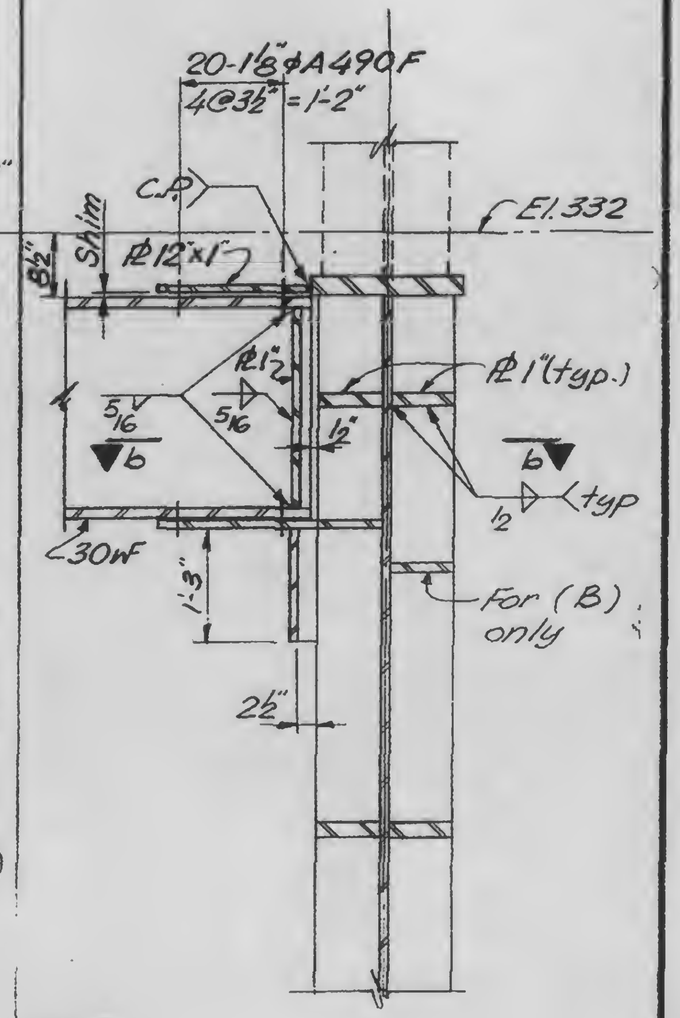

a
b

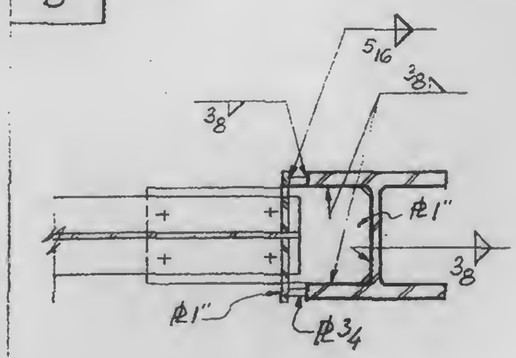

LICENSED PROFESSIONAL ENGINEER — LESLIE E. ROBERTSON — No. 34360 — UNIVERSITY OF THE STATE OF NEW YORK

DESIGNED: K. Chiang

DRAWN: John Gracias

REVIEWED

A | B

13-K2.5-5

SKILLING, HELLE, CHRISTIANSEN, ROBERTSON — Structural & Civil Engineers

PROJECT: THE WORLD TRADE CENTER | TITLE: GIRDER FUTURE COLUMN DETAILS | DATE: 11-3-72

REVISIONS

Released for construction 11-20-72

4-20-73

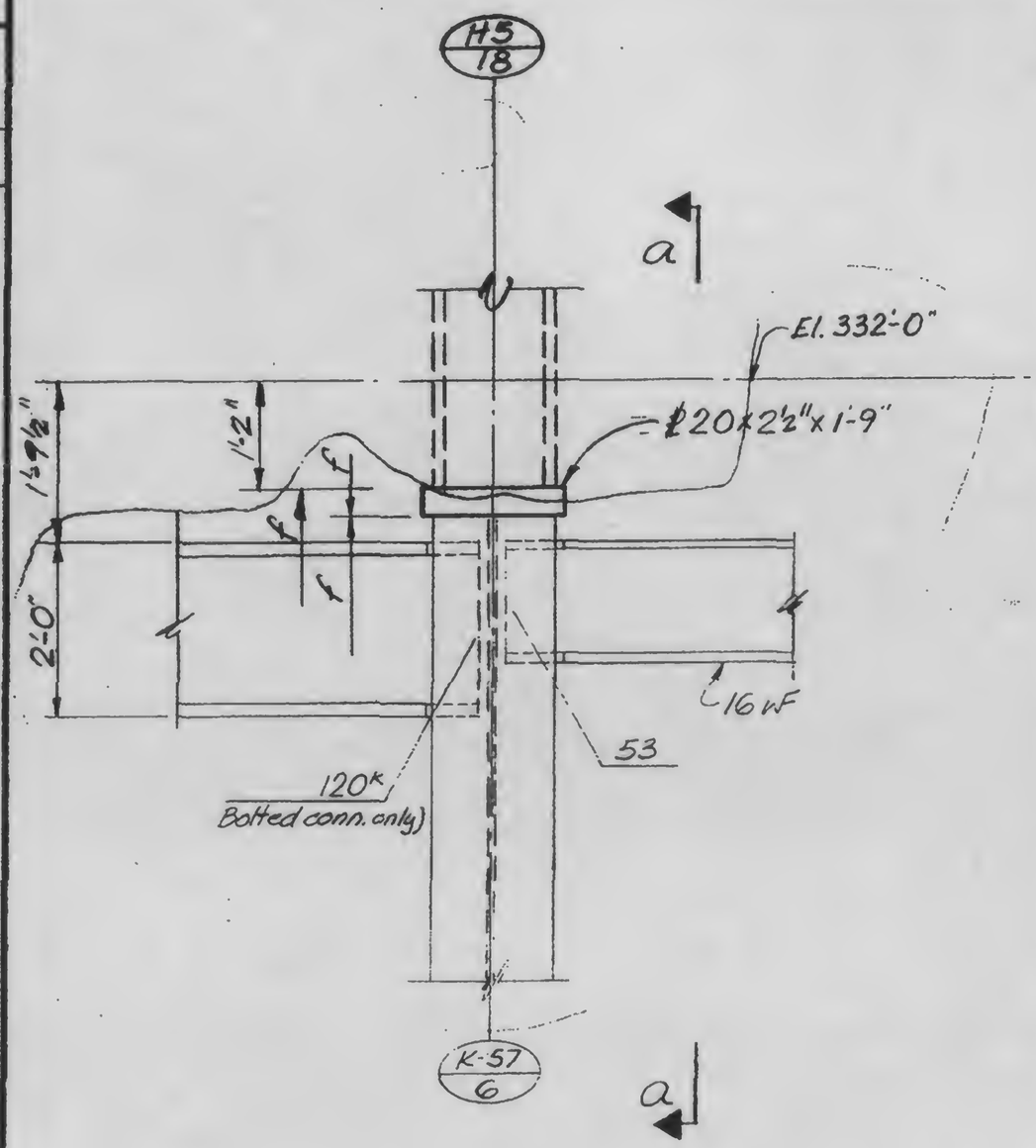

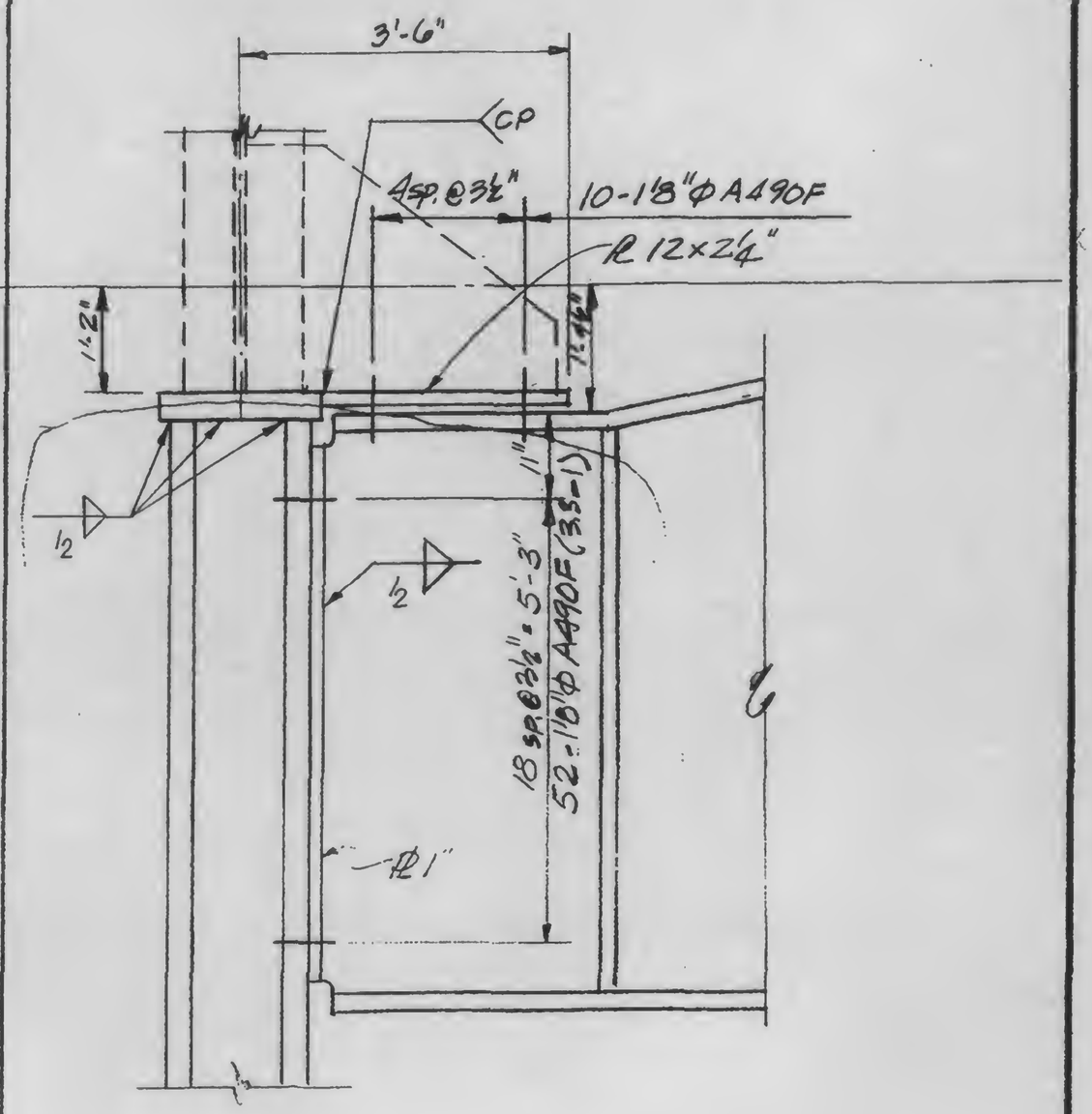

LICENSED PROFESSIONAL ENGINEER
LESLIE E. ROBERTSON
No. 34360
UNIVERSITY OF THE STATE OF NEW YORK

DESIGNED: K. Chiang

DRAWN: [illegible]

REVIEWED

A | a

13-K2.5-6

SKILLING, HELLE, CHRISTIANSEN, ROBERTSON — Structural & Civil Engineers

PROJECT: THE WORLD TRADE CENTER | TITLE: GIRDER FUTURE COLUMN DETAILS | DATE: 11-3-72

REVISIONS

Released for construction 11-20-72

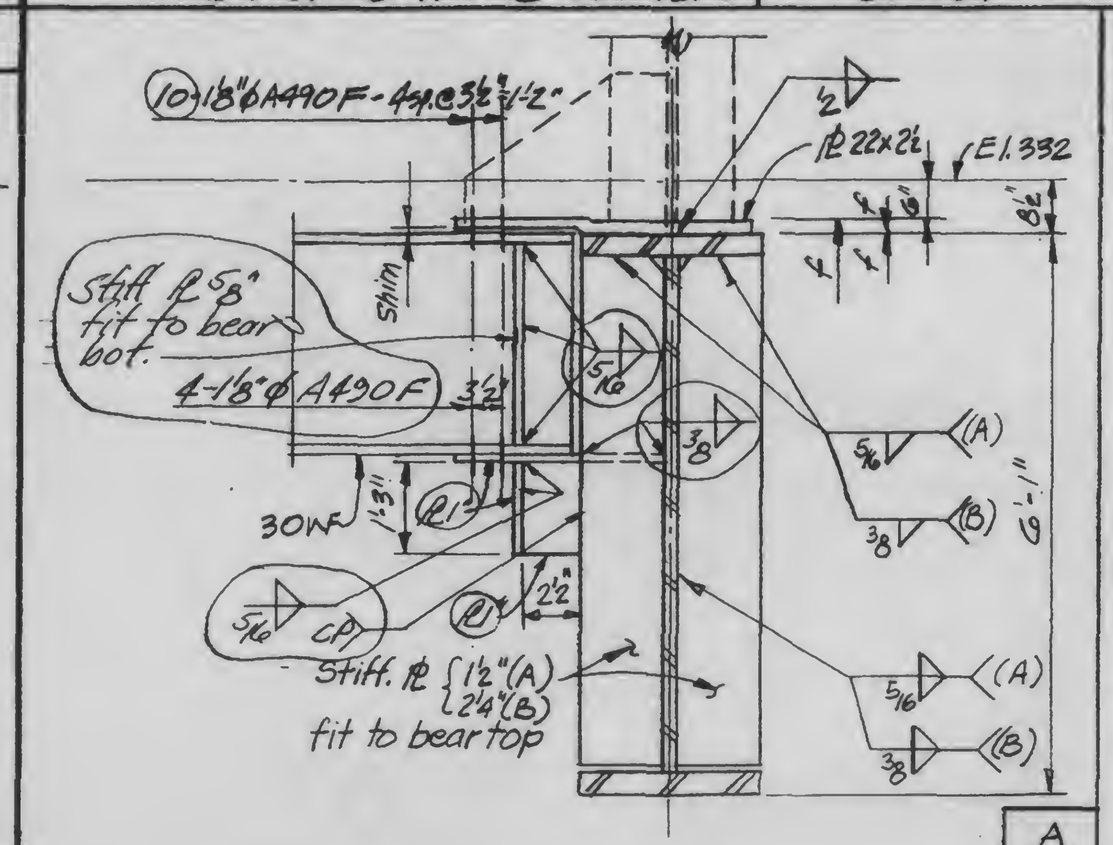

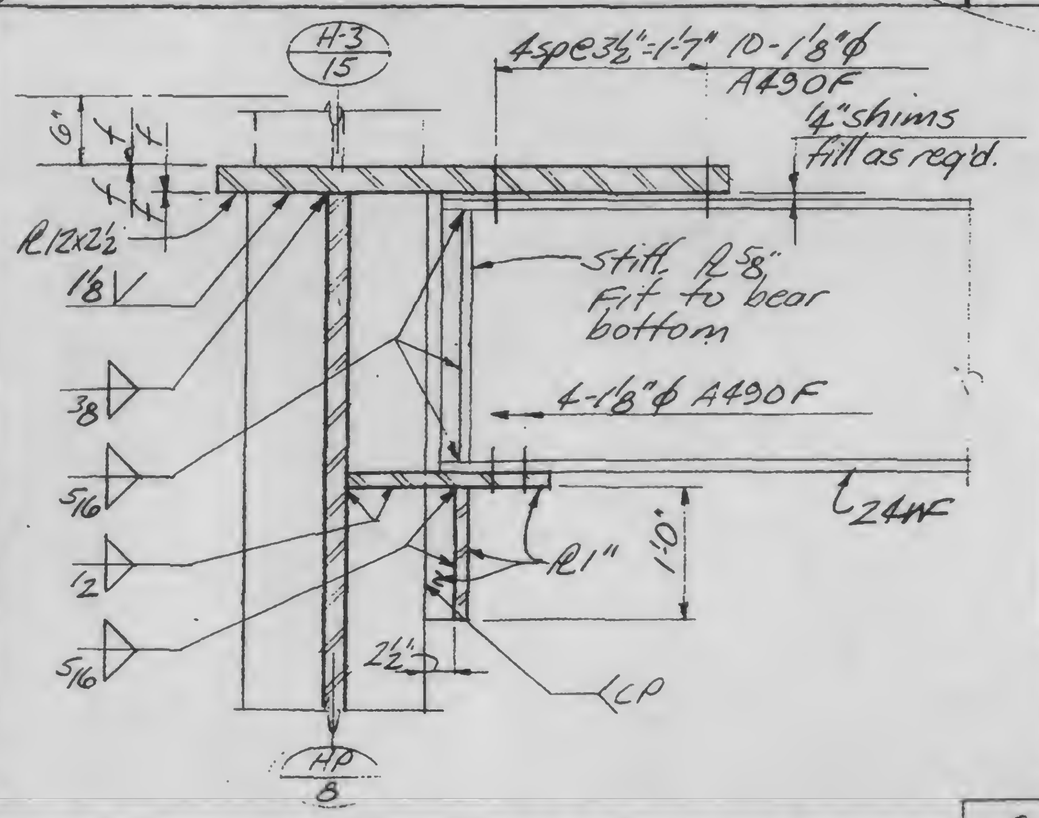

LICENSED PROFESSIONAL ENGINEER — LESLIE E. ROBERTSON — No. 34360 — UNIVERSITY OF THE STATE OF NEW YORK

DESIGNED

DRAWN

REVIEWED

13-K2.5-7

SKILLING, HELLE, CHRISTIANSEN, ROBERTSON — Structural & Civil Engineers

PROJECT: THE WORLD TRADE CENTER | TITLE: GIRDER ELEVATIONS | DATE: 11-3-72

REVISIONS

Release for construction 11-20-72

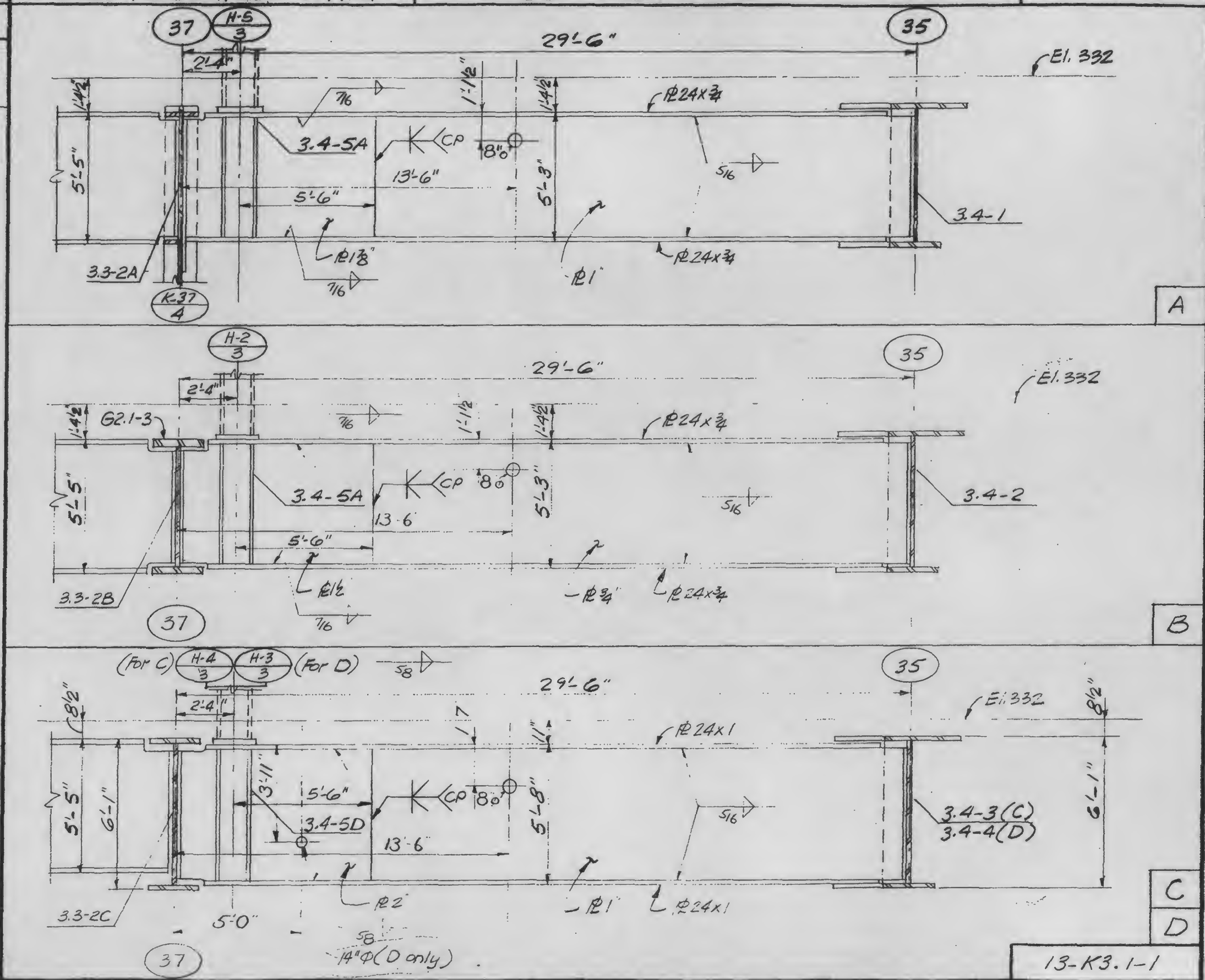

13-K3.1-1

LICENSED PROFESSIONAL ENGINEER — LESLIE E. ROBERTSON — No. 34360 — UNIVERSITY OF THE STATE OF NEW YORK

DESIGNED

DRAWN A.L. Franqui

REVIEWED

SKILLING, HELLE, CHRISTIANSEN, ROBERTSON — Structural & Civil Engineers

PROJECT: THE WORLD TRADE CENTER | TITLE: GIRDER ELEVATIONS | DATE: 11-3-72

REVISIONS

Released for construction 11-20-72

12-11-72

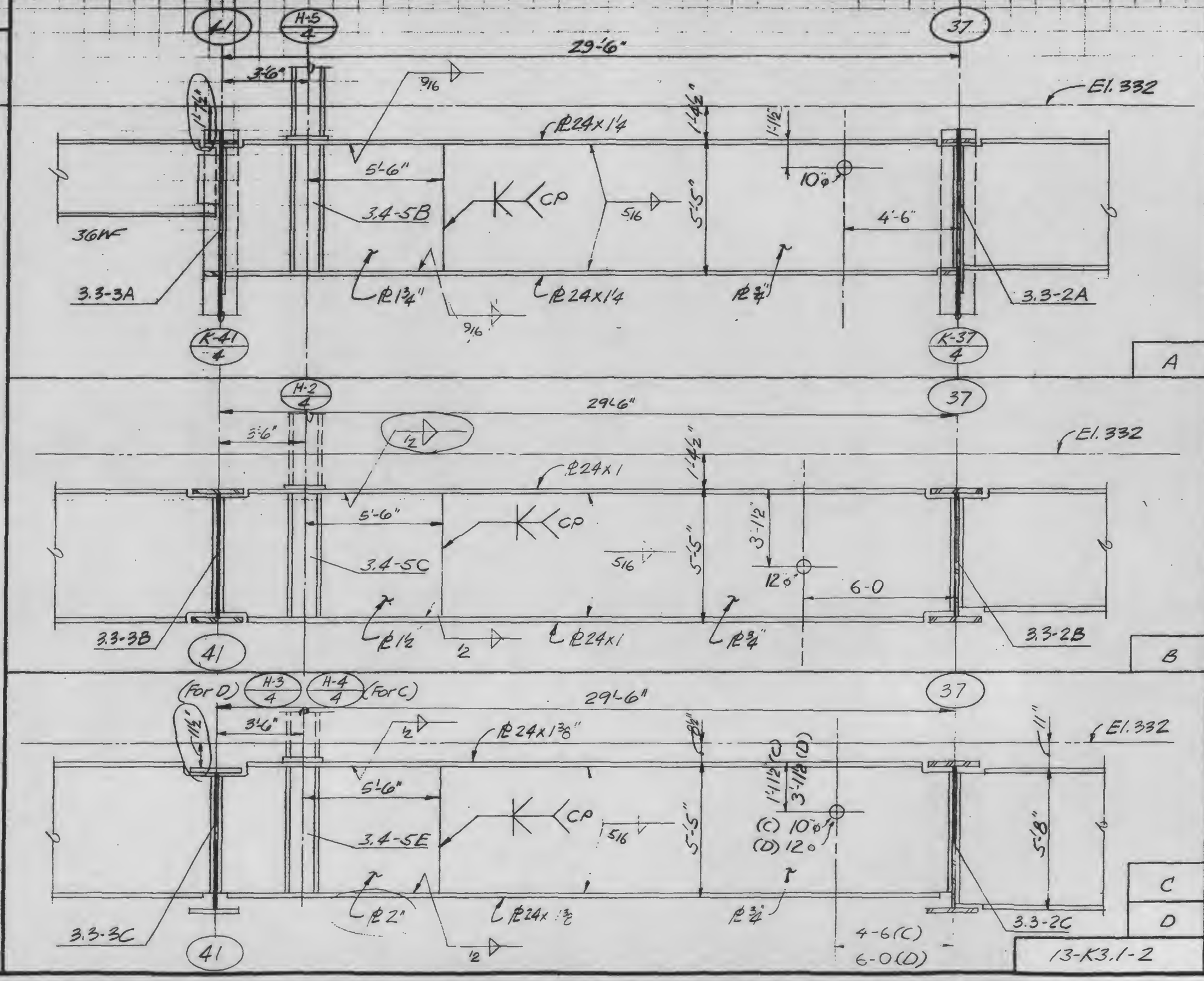

LICENSED PROFESSIONAL ENGINEER — LESLIE E. ROBERTSON — No. 34360 — UNIVERSITY OF THE STATE OF NEW YORK

DESIGNED

DRAWN

REVIEWED

13-K3.1-2

SKILLING, HELLE, CHRISTIANSEN, ROBERTSON — Structural & Civil Engineers

PROJECT: THE WORLD TRADE CENTER | TITLE: GIRDER ELEVATIONS | DATE: 11-3-72

REVISIONS

Release for construction 11-20-72

12-11-72

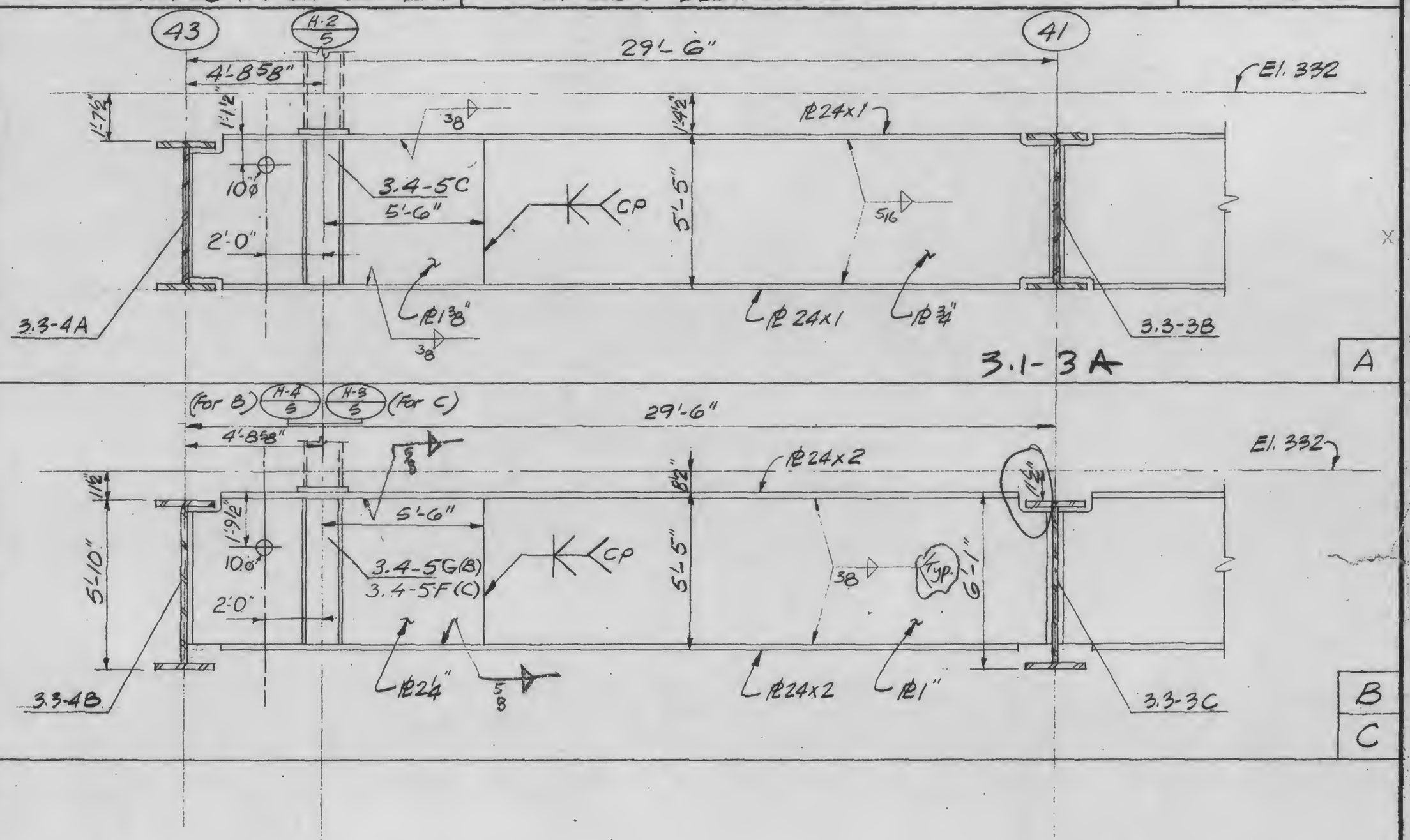

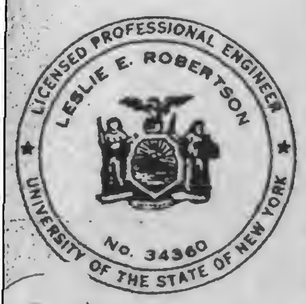

SIGNED

DRAWN A.L. Franqui

REVIEWED

13-K3.1-3

SKILLING, HELLE, CHRISTIANSEN, ROBERTSON — Structural & Civil Engineers

PROJECT: THE WORLD TRADE CENTER | TITLE: GIRDER ELEVATIONS | DATE: 11-3-72

REVISIONS

Release for construction 11-20-72

12-11-72

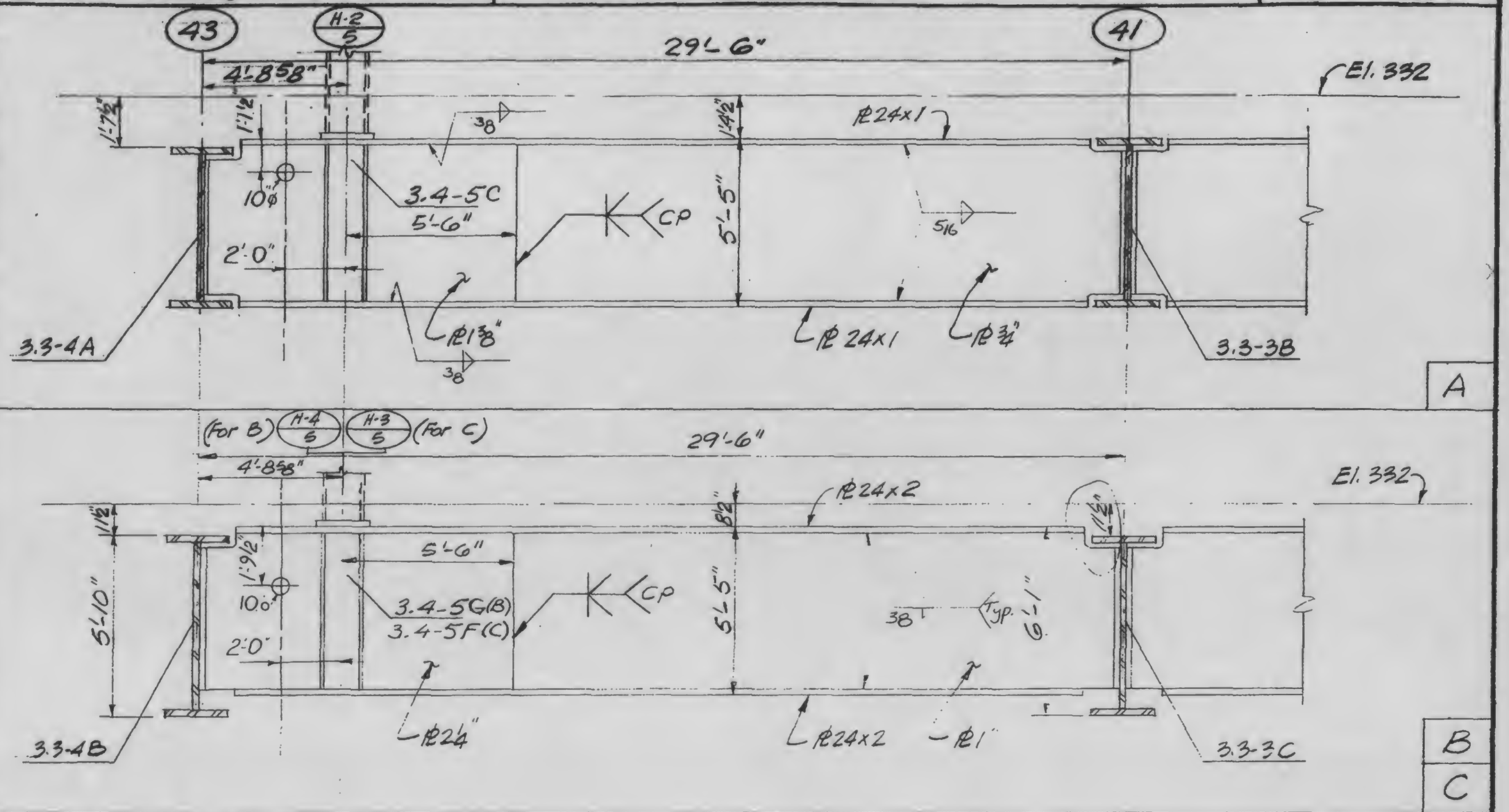

LICENSED PROFESSIONAL ENGINEER — LESLIE E. ROBERTSON — No. 34360 — UNIVERSITY OF THE STATE OF NEW YORK

DESIGNED

DRAWN A.L. Franqui

REVIEWED

13-K3.1-3

SKILLING, HELLE, CHRISTIANSEN, ROBERTSON — Structural & Civil Engineers

PROJECT: THE WORLD TRADE CENTER | TITLE: GIRDER ELEVATIONS | DATE: 11-3-72

REVISIONS

Released for construction 11-20-72

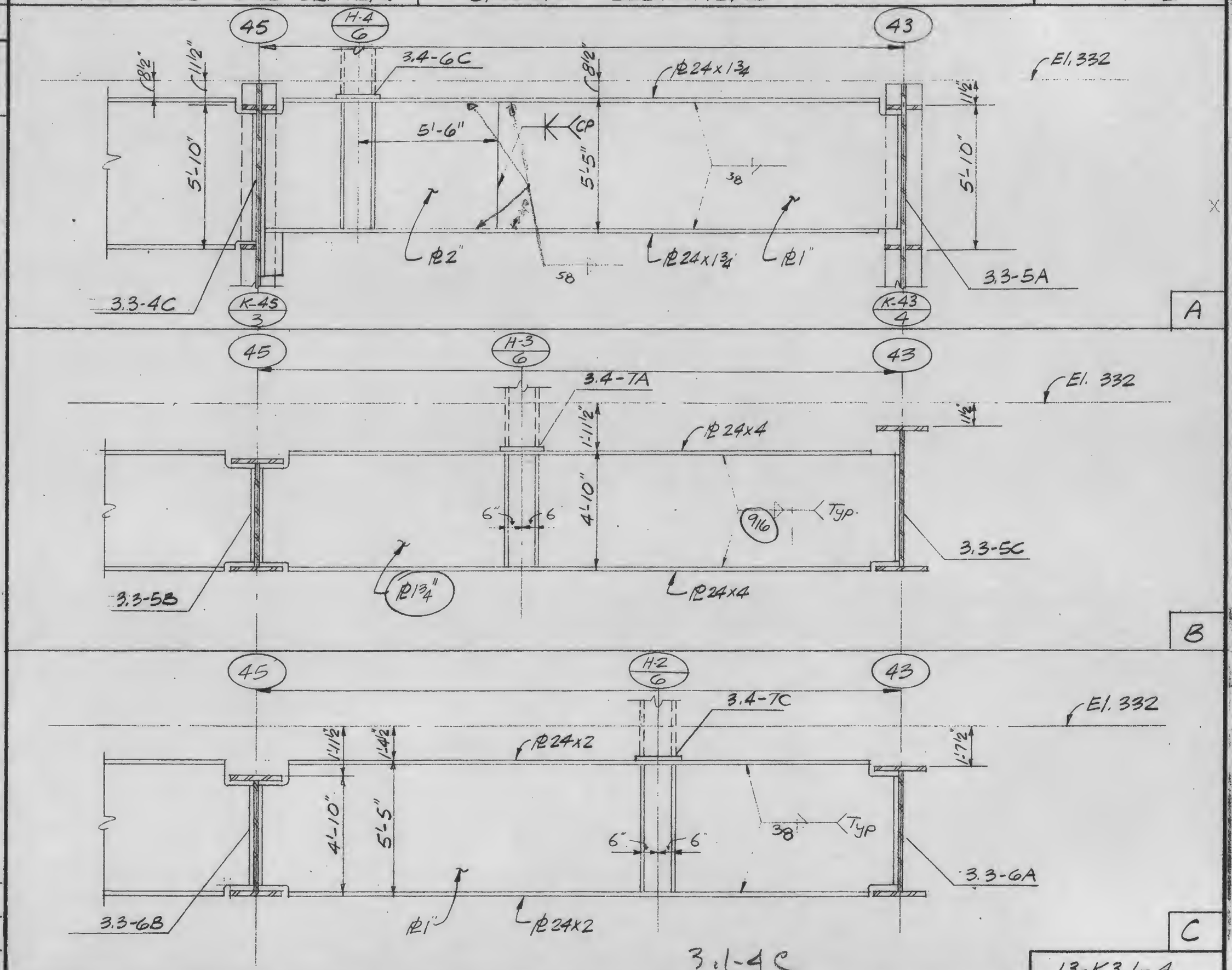

LICENSED PROFESSIONAL ENGINEER — LESLIE E. ROBERTSON — No. 34360 — UNIVERSITY OF THE STATE OF NEW YORK

SIGNED

DRAWN: A.L. Pronqui

REVIEWED

3.1-4C

13-K3.1-4

SKILLING, HELLE, CHRISTIANSEN, ROBERTSON — Structural & Civil Engineers

PROJECT: THE WORLD TRADE CENTER | TITLE: GIRDER ELEVATIONS | DATE: 11-3-72

REVISIONS

Released for construction 11-20-72

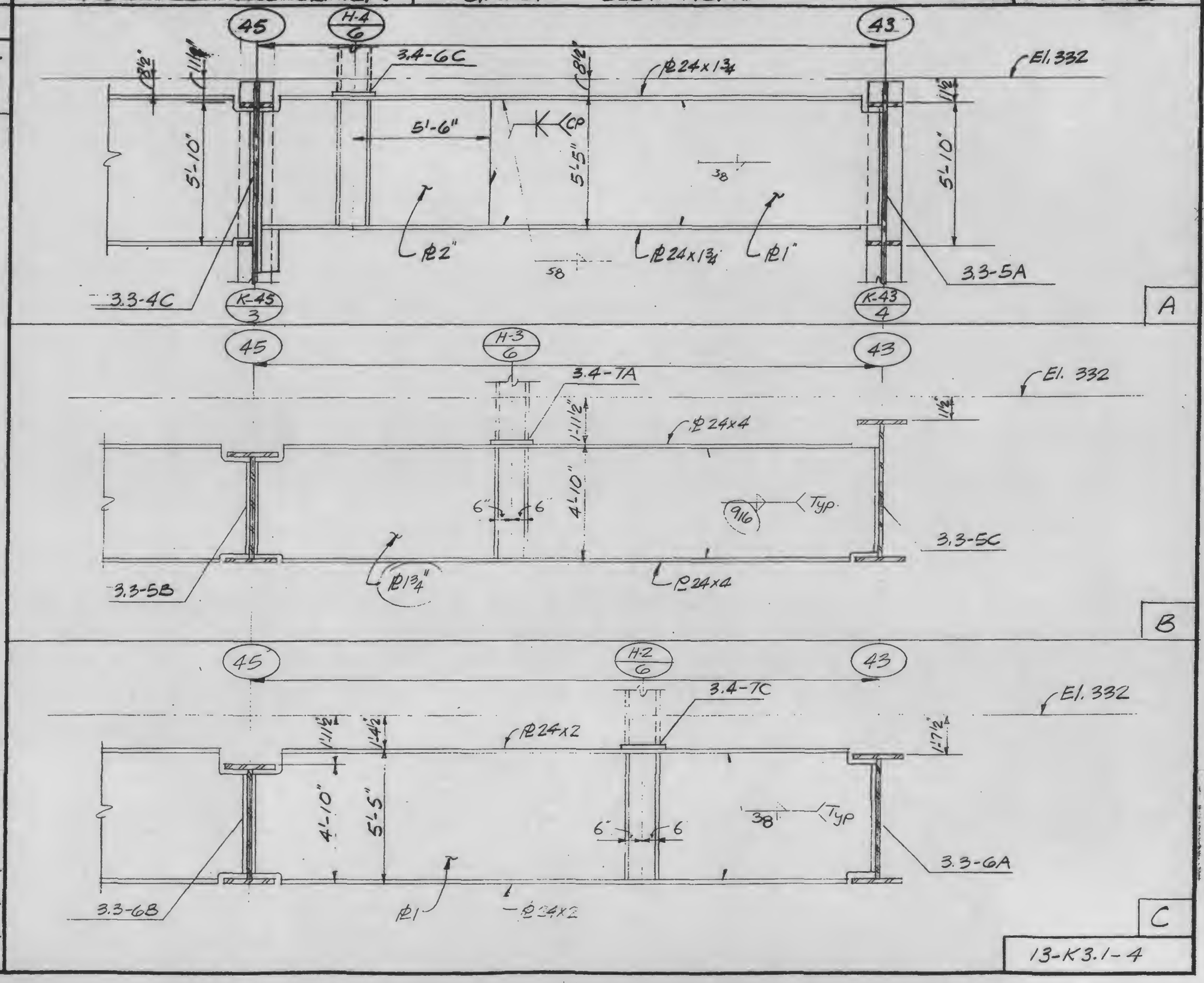

LICENSED PROFESSIONAL ENGINEER — LESLIE E. ROBERTSON — No. 34360 — UNIVERSITY OF THE STATE OF NEW YORK

DESIGNED

DRAWN A.L. Fronqui

REVIEWED

13-K3.1-4

SKILLING, HELLE, CHRISTIANSEN, ROBERTSON — Structural & Civil Engineers

PROJECT: THE WORLD TRADE CENTER | TITLE: GIRDER ELEVATIONS | DATE: 11-3-72

REVISIONS

Released for construction 11-20-72

12-11-72

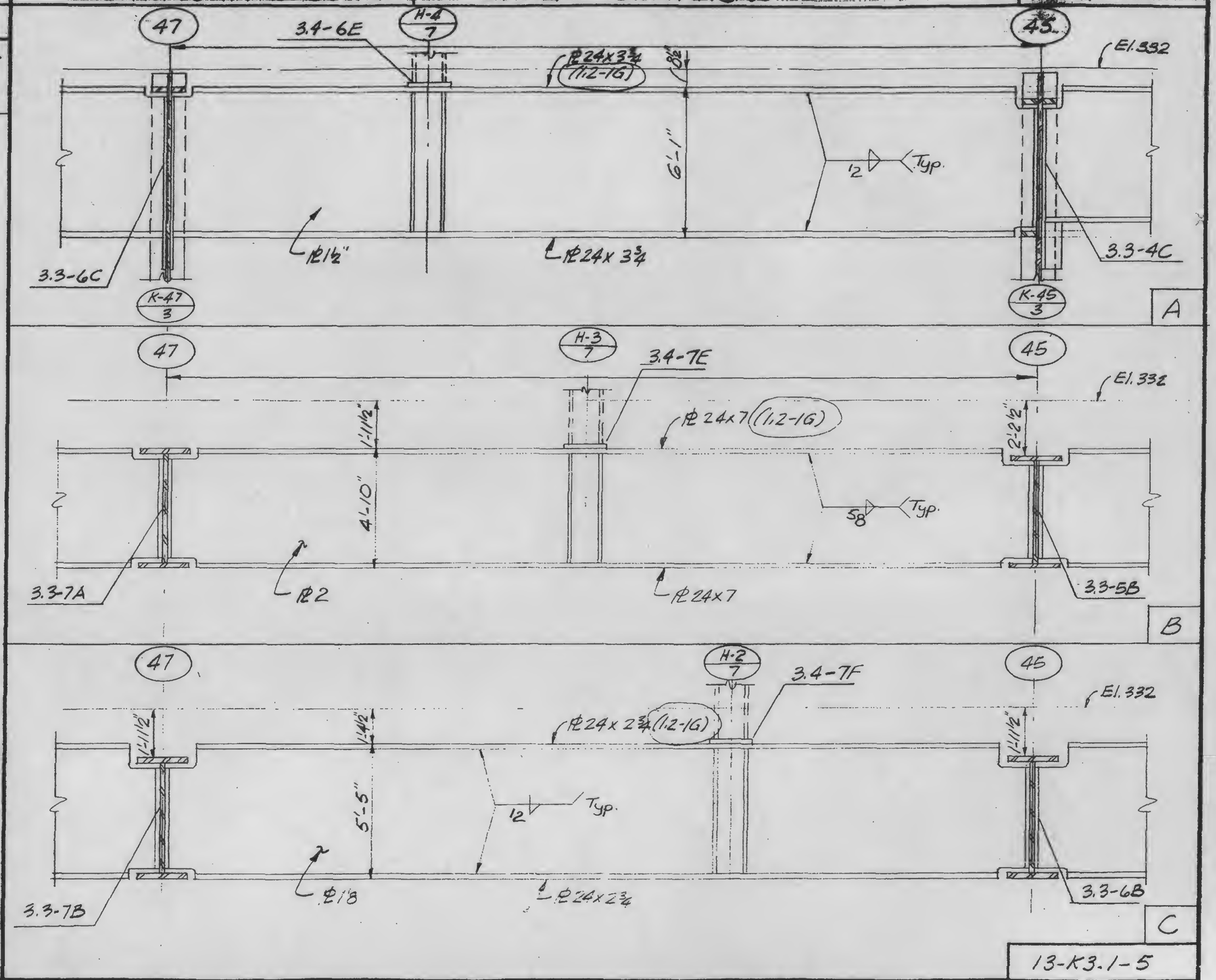

LICENSED PROFESSIONAL ENGINEER — LESLIE E. ROBERTSON — No. 34360 — UNIVERSITY OF THE STATE OF NEW YORK

DESIGNED

DRAWN A.L. Franqui

REVIEWED

13-K3.1-5

SKILLING, HELLE, CHRISTIANSEN, ROBERTSON — Structural & Civil Engineers

PROJECT: THE WORLD TRADE CENTER | TITLE: GIRDER ELEVATIONS | DATE: 11-3-72

REVISIONS

Released for construction 11-20-72

6-4-73

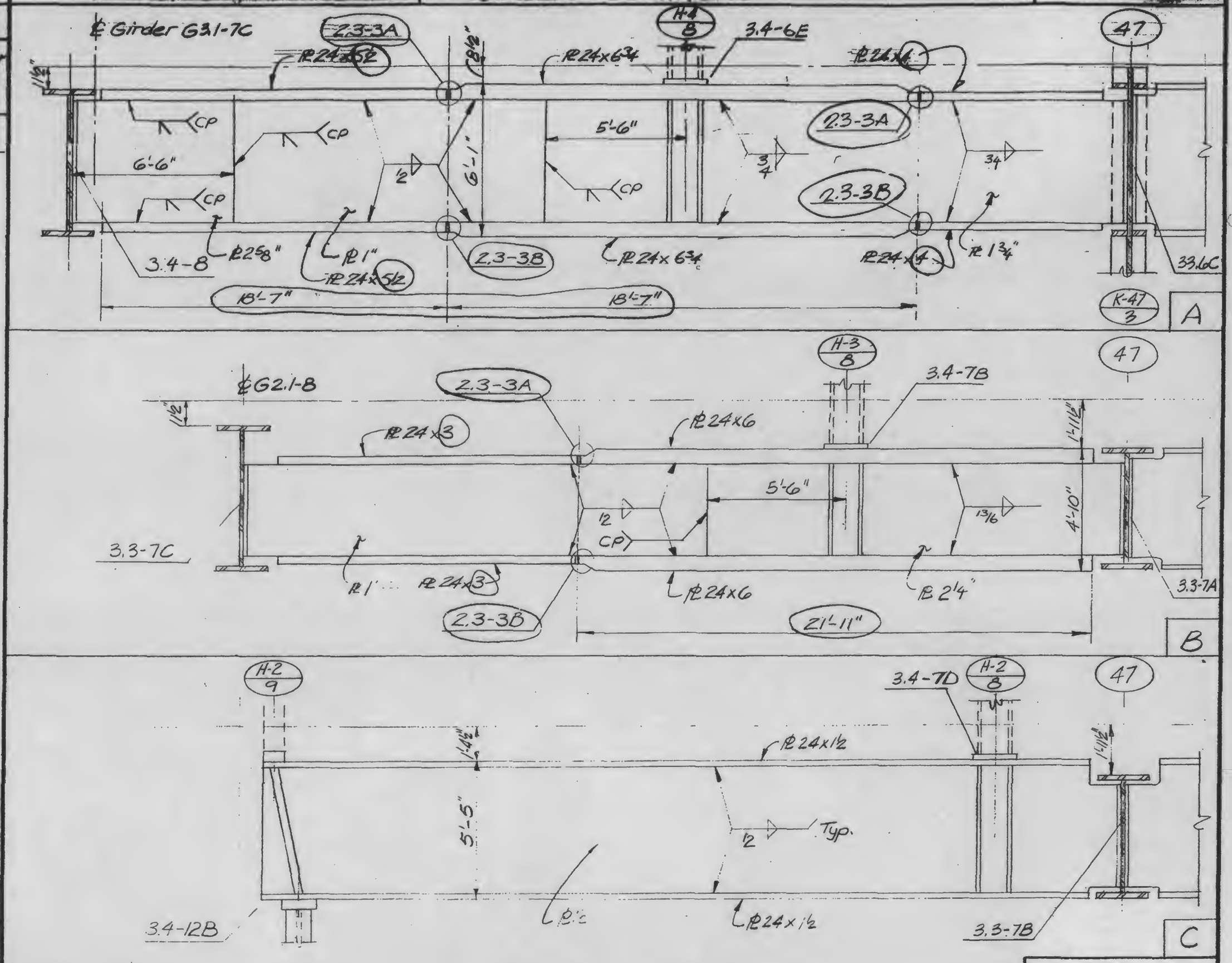

LICENSED PROFESSIONAL ENGINEER — LESLIE E. ROBERTSON — No. 34360 — UNIVERSITY OF THE STATE OF NEW YORK

DESIGNED

DRAWN A.L. Franqui

REVIEWED

SKILLING, HELLE, CHRISTIANSEN, ROBERTSON — Structural & Civil Engineers

PROJECT: THE WORLD TRADE CENTER | TITLE: GIRDER ELEVATIONS | DATE: 11-3-72

REVISIONS

Released for construction 11-20-72

6-4-73

6-20-73

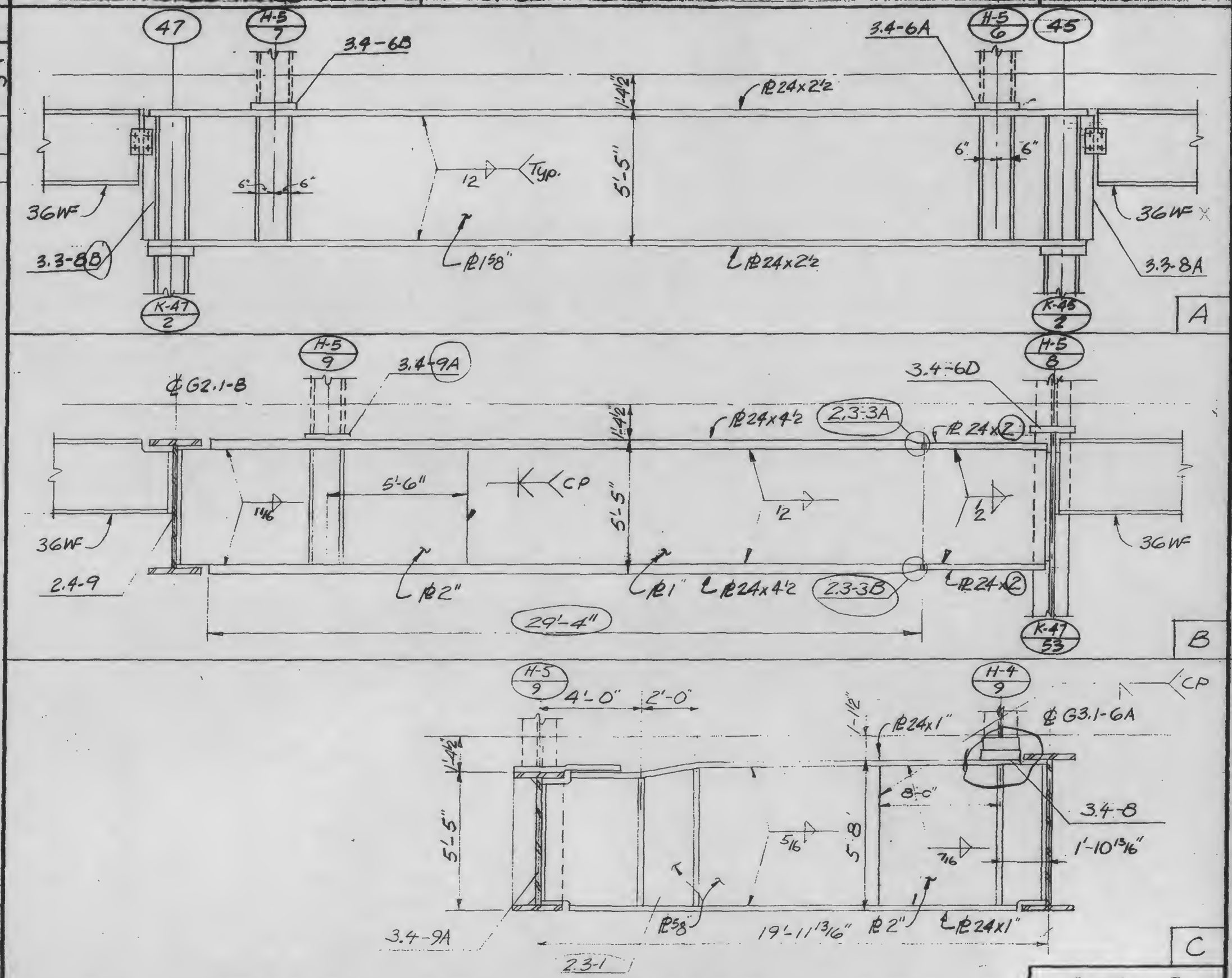

LICENSED PROFESSIONAL ENGINEER — LESLIE E. ROBERTSON — No. 34360 — UNIVERSITY OF THE STATE OF NEW YORK

DESIGNED

DRAWN A.L. Franqui

REVIEWED

13-K3.1-7

SKILLING, HELLE, CHRISTIANSEN, ROBERTSON — Structural & Civil Engineers

PROJECT: THE WORLD TRADE CENTER

TITLE: GIRDER ELEVATIONS

DATE: 11-3-72

REVISIONS

Released for construction 11-20-72

12-11-72

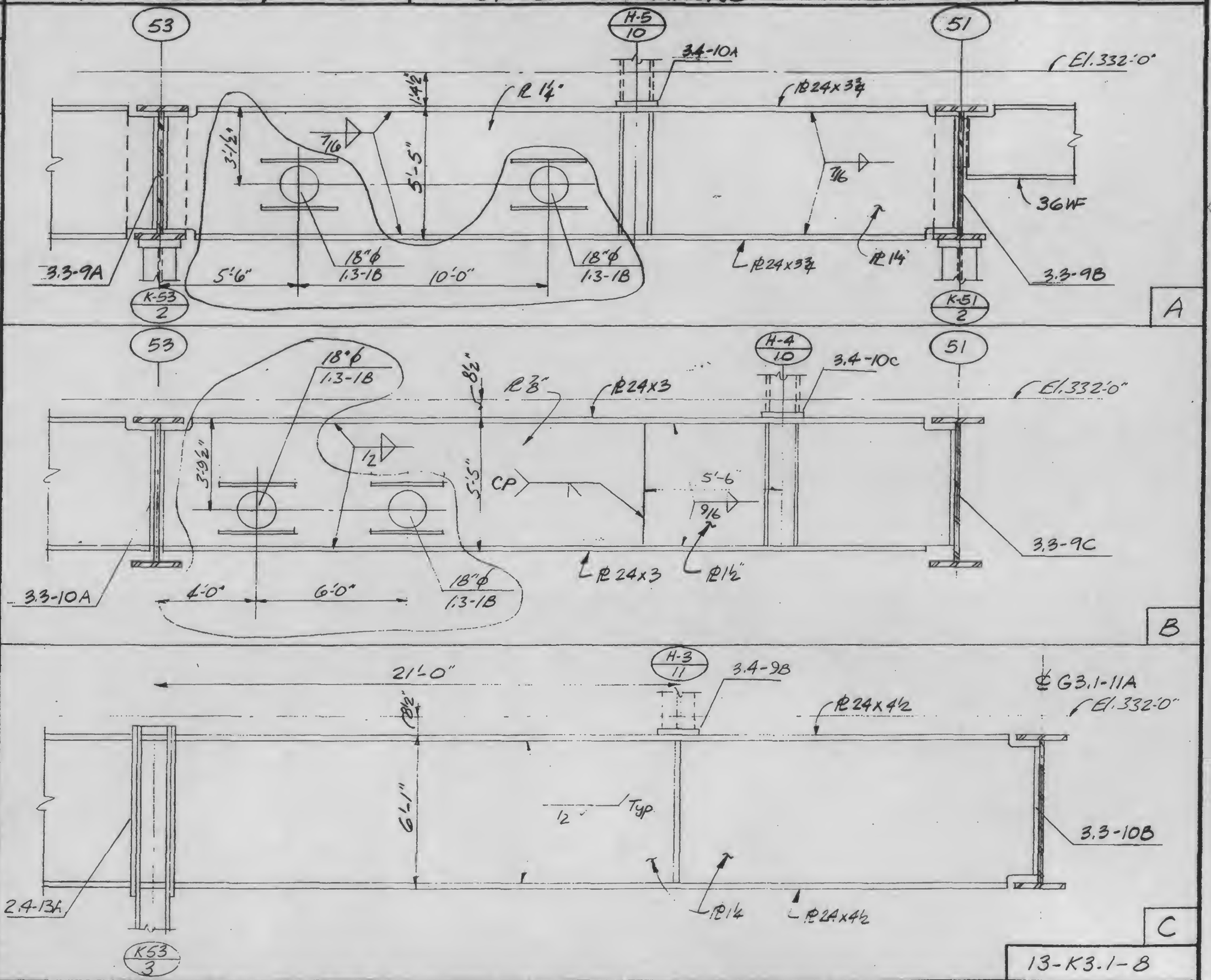

LICENSED PROFESSIONAL ENGINEER — LESLIE E. ROBERTSON — No. 34360 — UNIVERSITY OF THE STATE OF NEW YORK

DESIGNED

DRAWN A.L. Frangui

REVIEWED

SKILLING, HELLE, CHRISTIANSEN, ROBERTSON — Structural & Civil Engineers

PROJECT: THE WORLD TRADE CENTER

TITLE: GIRDER ELEVATIONS

DATE: 11-3-72

REVISIONS

Released for construction 11-20-72

12-11-72

6-4-73

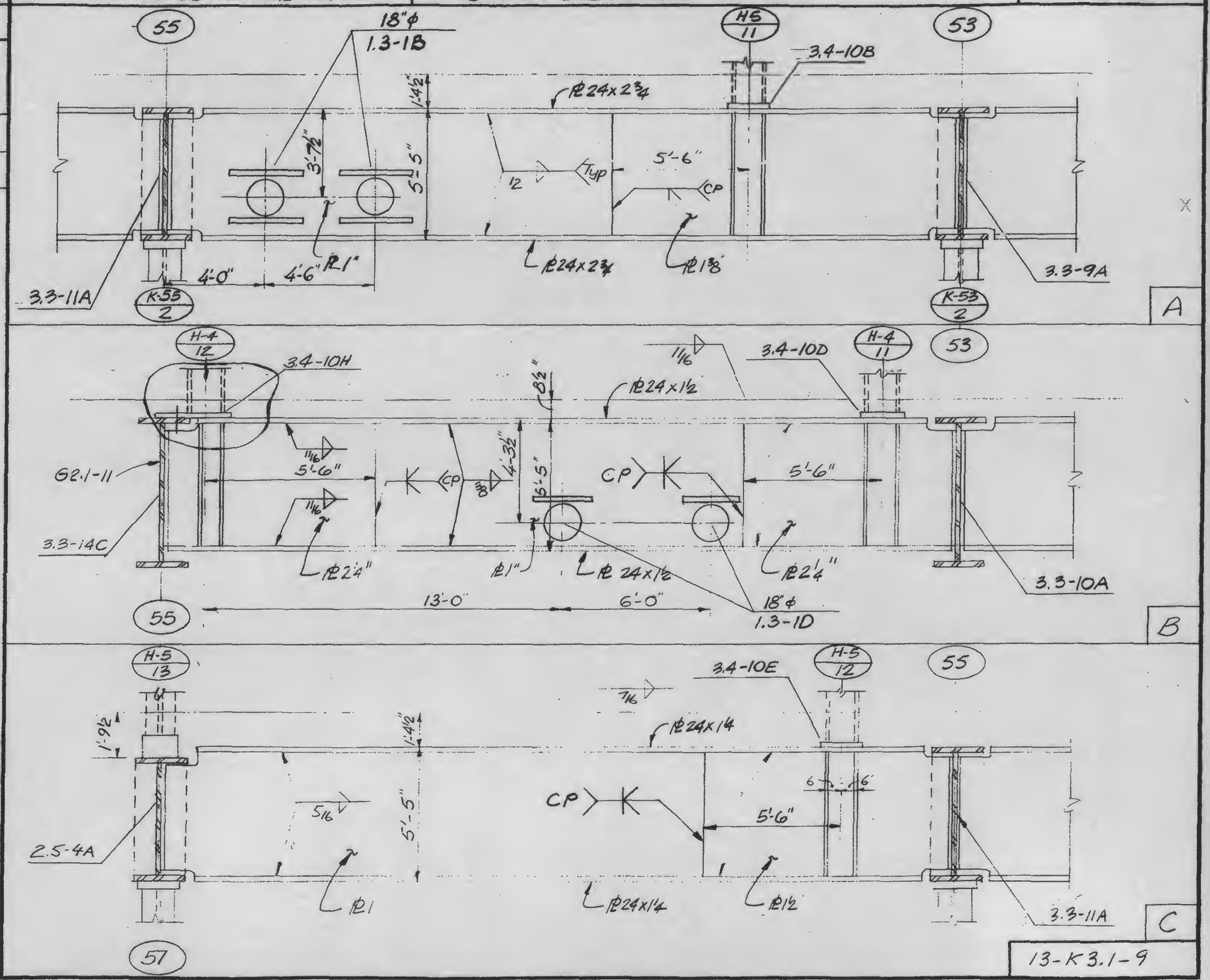

LICENSED PROFESSIONAL ENGINEER — LESLIE E. ROBERTSON — No. 34360 — UNIVERSITY OF THE STATE OF NEW YORK

DESIGNED

DRAWN A.L. Franqui

REVIEWED

SKILLING, HELLE, CHRISTIANSEN, ROBERTSON — Structural & Civil Engineers

PROJECT: THE WORLD TRADE CENTER | TITLE: GIRDER ELEVATIONS | DATE: 11-3-72

REVISIONS

Released for construction 11-20-72

4-20-73

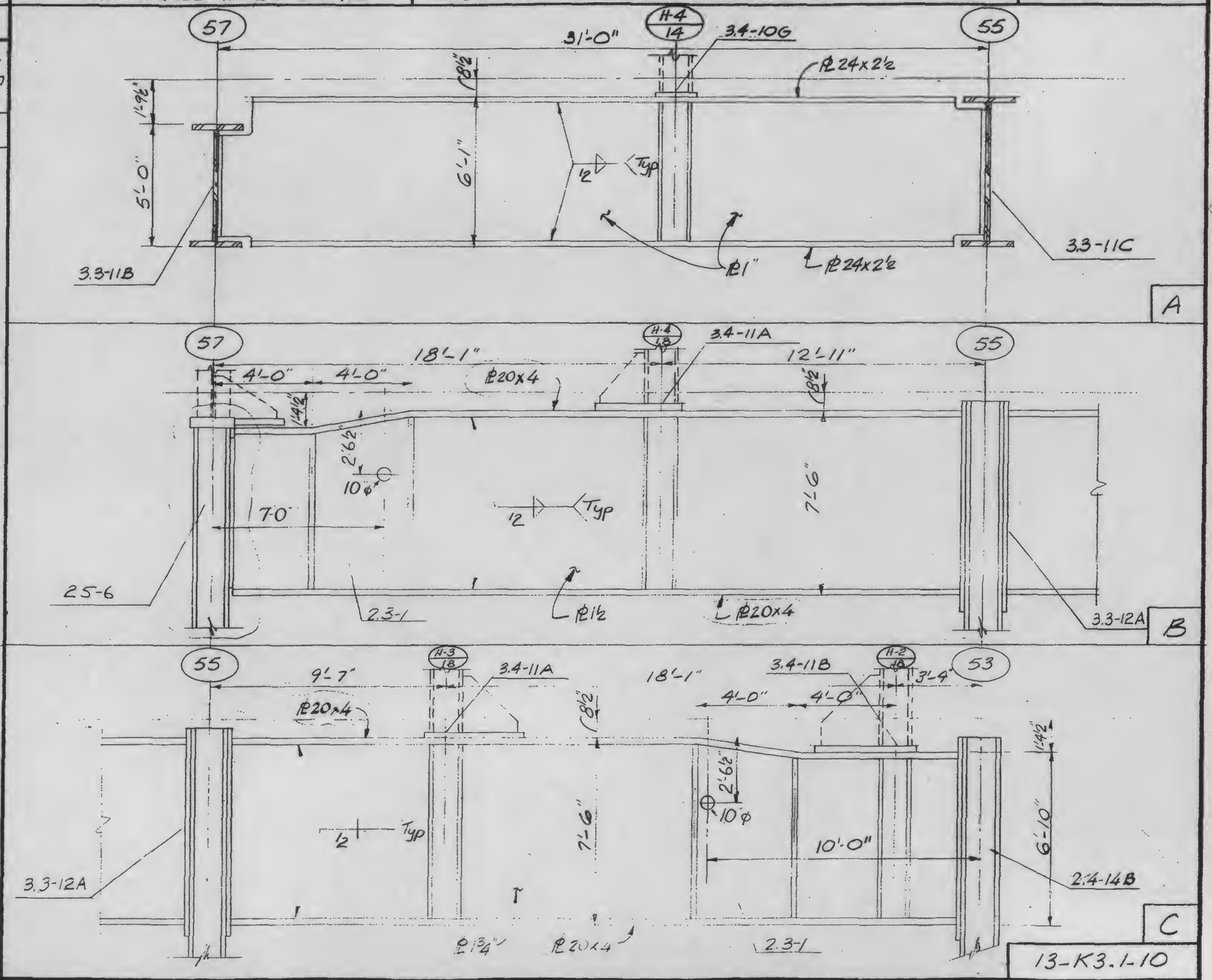

LICENSED PROFESSIONAL ENGINEER — LESLIE E. ROBERTSON — No. 34360 — UNIVERSITY OF THE STATE OF NEW YORK

DESIGNED: K. Chiang

DRAWN: A.L. Franqui

REVIEWED

SKILLING, HELLE, CHRISTIANSEN, ROBERTSON . Structural & Civil Engineers

PROJECT: THE WORLD TRADE CENTER | TITLE: GIRDER ELEVATIONS | DATE: 11-3-72

REVISIONS

Released for construction 11-20-72

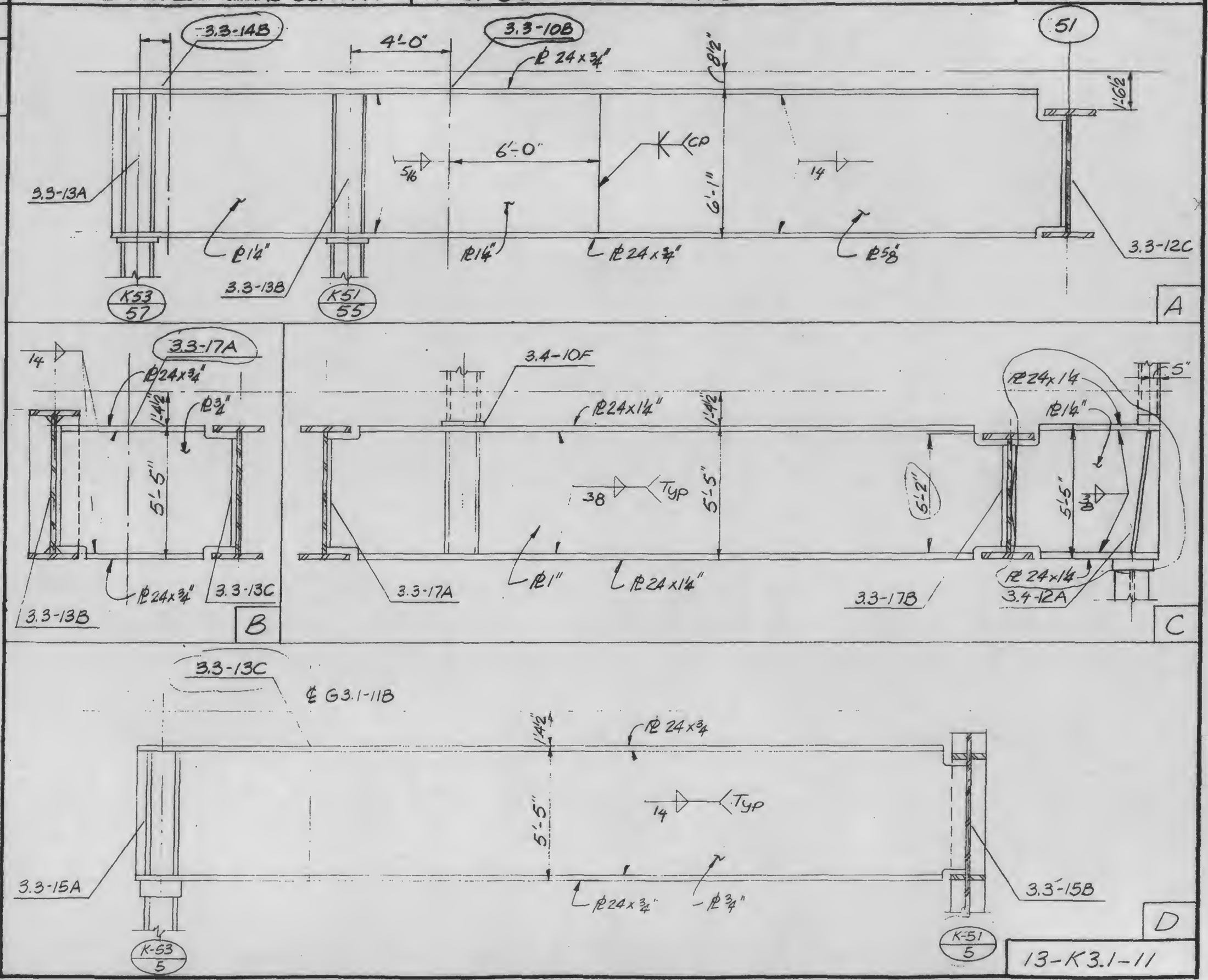

LICENSED PROFESSIONAL ENGINEER
LESLIE E. ROBERTSON
No. 34360
UNIVERSITY OF THE STATE OF NEW YORK

DESIGNED

DRAWN A.L. Franqui

REVIEWED

SKILLING, HELLE, CHRISTIANSEN, ROBERTSON — Structural & Civil Engineers

PROJECT	TITLE	DATE
THE WORLD TRADE CENTER	GIRDER ELEVATIONS	11-3-72

REVISIONS

- Released for construction 11-20-72
- 12-11-72
- 2-5-73
- 4-20-73

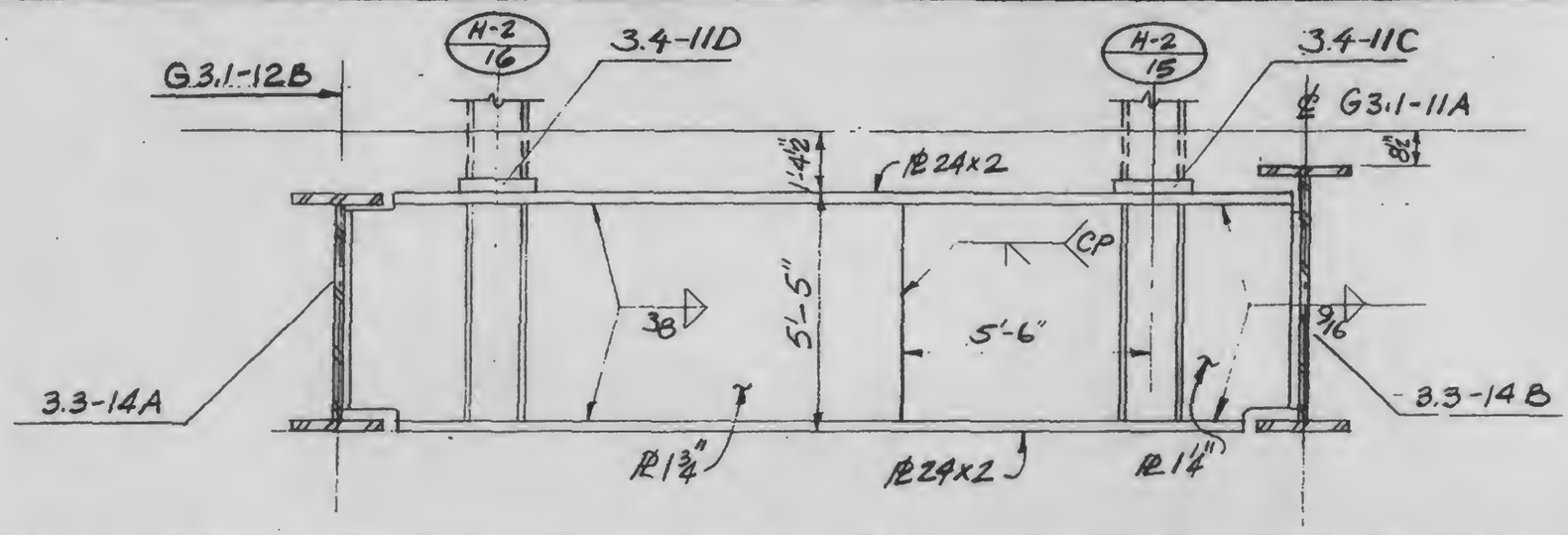

A

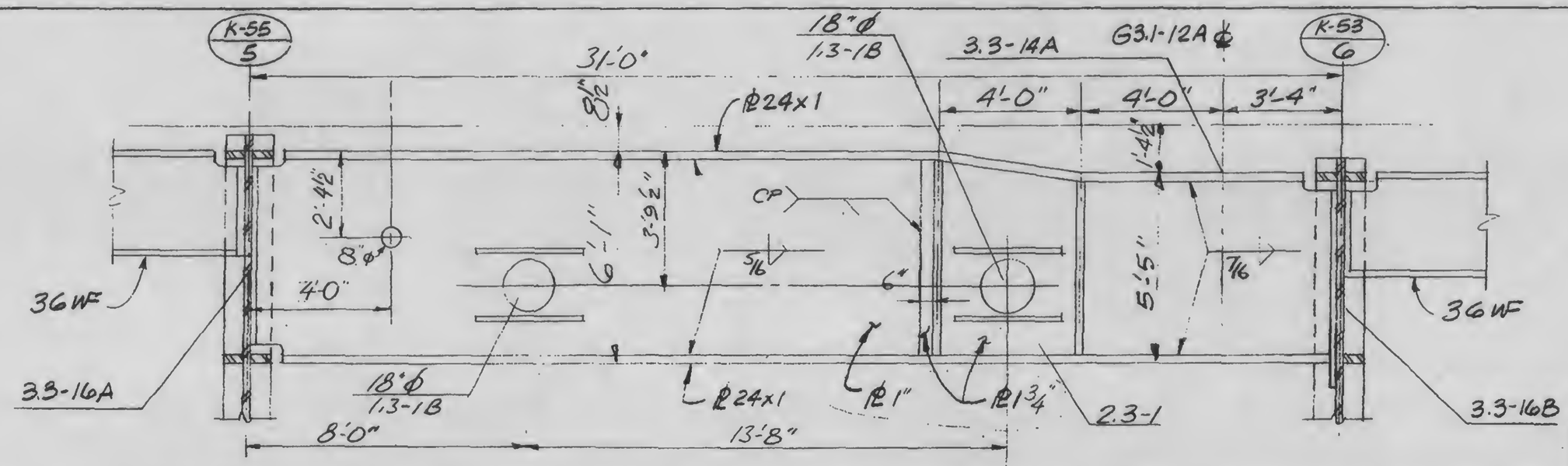

B

LICENSED PROFESSIONAL ENGINEER — LESLIE E. ROBERTSON — No. 34360 — UNIVERSITY OF THE STATE OF NEW YORK

DESIGNED: K. Chiang

DRAWN: A.L. Franqui

REVIEWED:

13-K3.1-12

SKILLING, HELLE, CHRISTIANSEN, ROBERTSON — Structural & Civil Engineers

PROJECT: THE WORLD TRADE CENTER | TITLE: TYPICAL GIRDER DETAILS | DATE: 11-3-72

REVISIONS

Released for construction 11-20-72

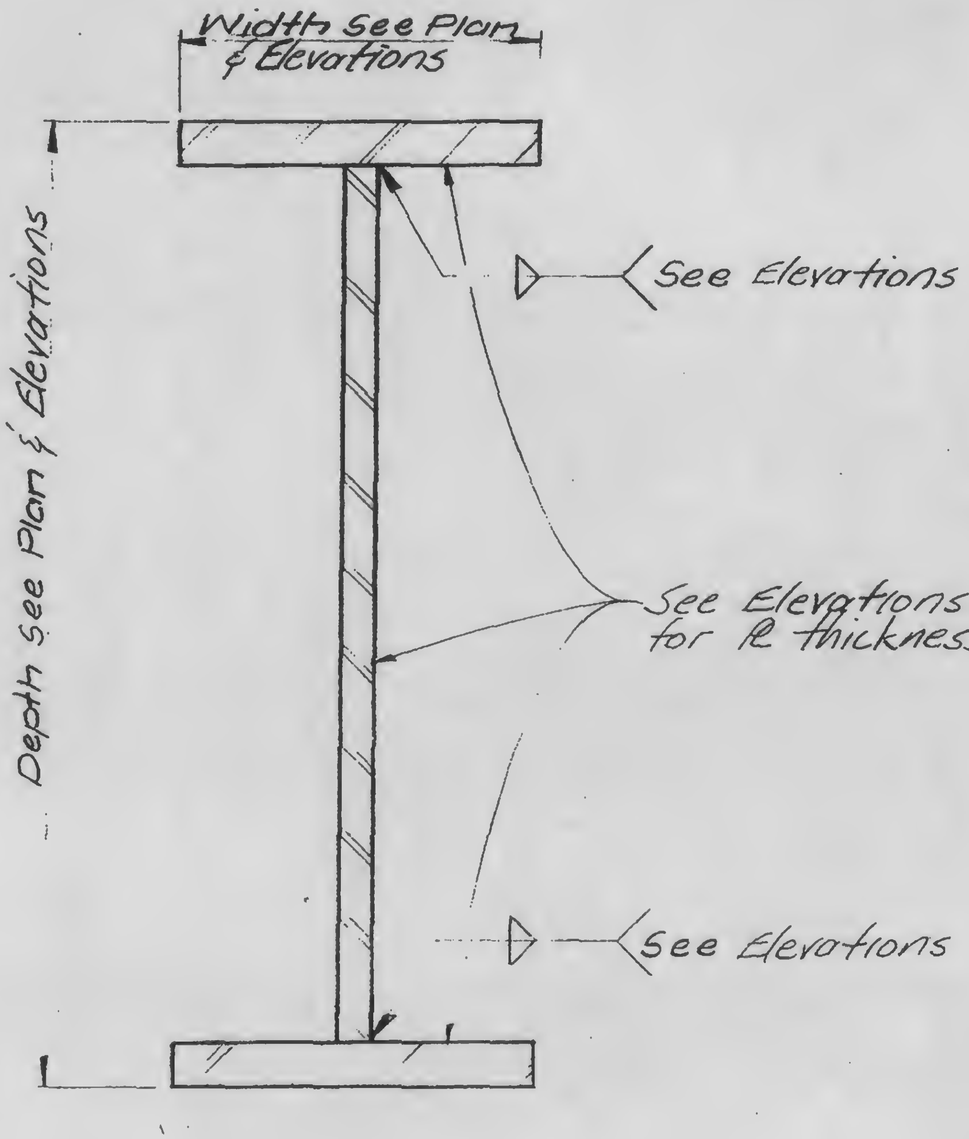

LICENSED PROFESSIONAL ENGINEER
LESLIE E. ROBERTSON
No. 34360
UNIVERSITY OF THE STATE OF NEW YORK

DESIGNED

DRAWN TR

REVIEWED

13-K3.2-1

SKILLING, HELLE, CHRISTIANSEN, ROBERTSON

PROJECT THE WORLD TRADE CENTER | TITLE GIRDER CONNECTION TYPICAL END PLATE | DATE 11-3-72

REVISIONS

Released for construction 11-20-72

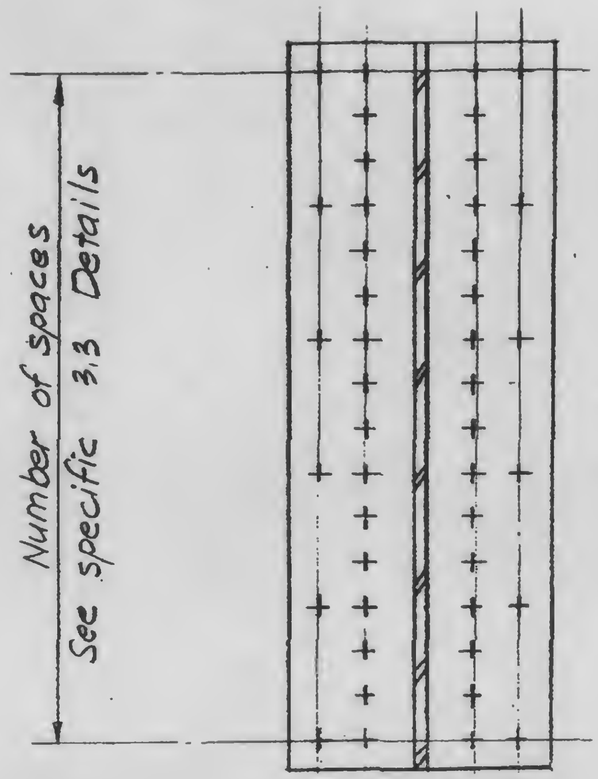

Place bolt each space these two rows.

Place remaining bolts approx. evenly spaced in these two rows.

See specific 3.3 Details for total number of bolts

4 ROWS

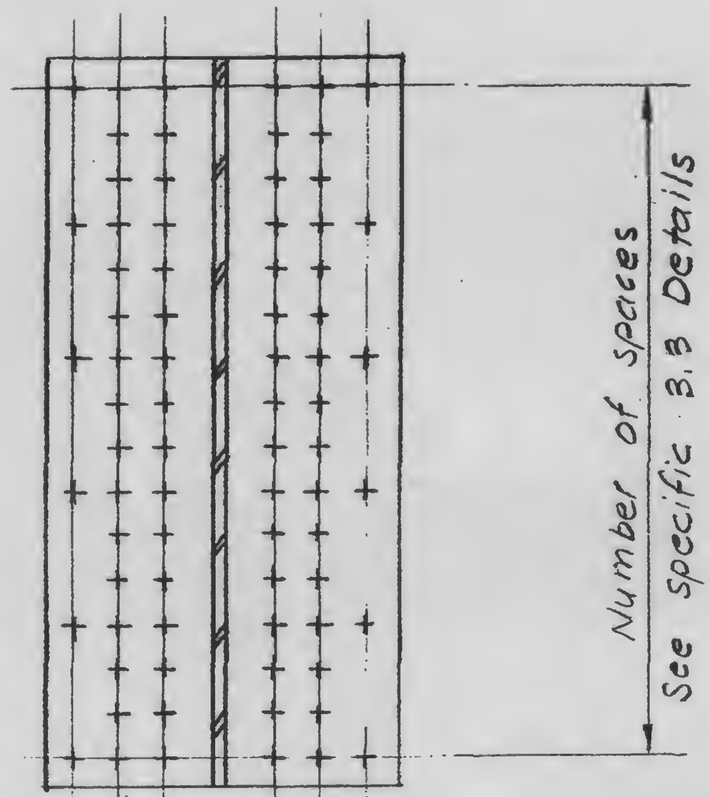

Place bolt each space these four rows

Place remaining bolts approx. evenly spaced in these two rows.

6 ROWS

See specific 3.3 Details for total number of bolts.

13-K3.3-1

LICENSED PROFESSIONAL ENGINEER
LESLIE E. ROBERTSON
No. 34360
UNIVERSITY OF THE STATE OF NEW YORK

DESIGNED

DRAWN

REVIEWED

SKILLING, HELLE, CHRISTIANSEN, ROBERTSON — Structu[redacted]

PROJECT: THE WORLD TRADE CENTER | TITLE: GIRDER CONNECTION [redacted] | DATE: 11/3/72

REVISIONS

Released for construction 11-20-72

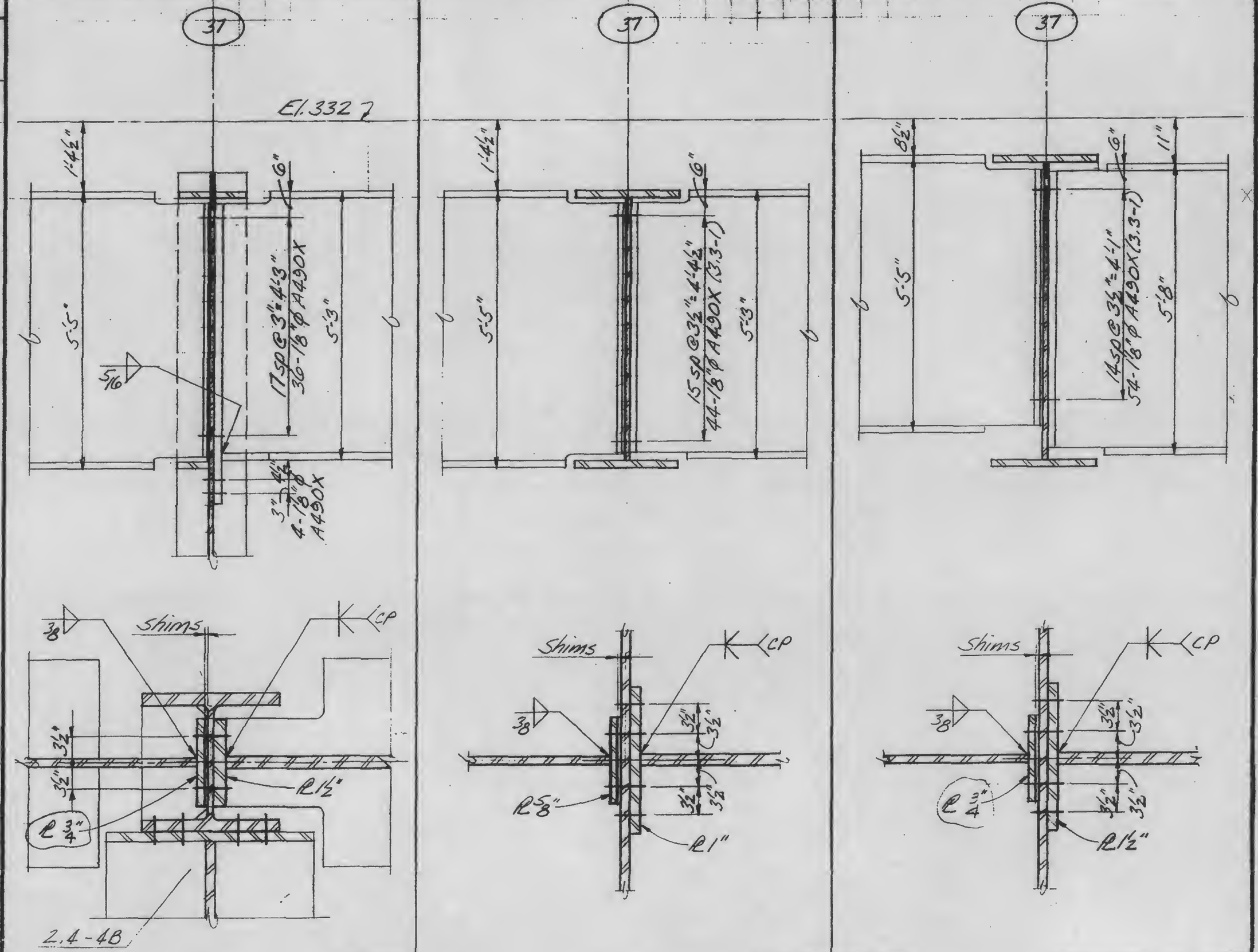

LICENSED PROFESSIONAL ENGINEER — LESLIE E. ROBERTSON — No. 34360 — UNIVERSITY OF THE STATE OF NEW YORK

DESIGNED

DRAWN

REVIEWED

13-K3.3-2

SKILLING, HELLE, CHRISTIANSEN, ROBERTSON — Structural & Civil Engineers

PROJECT: THE WORLD TRADE CENTER

TITLE: GIRDER CONNECTION DETAILS

DATE: 11-3-72

REVISIONS

released for construction 11-20-72

12-11-72

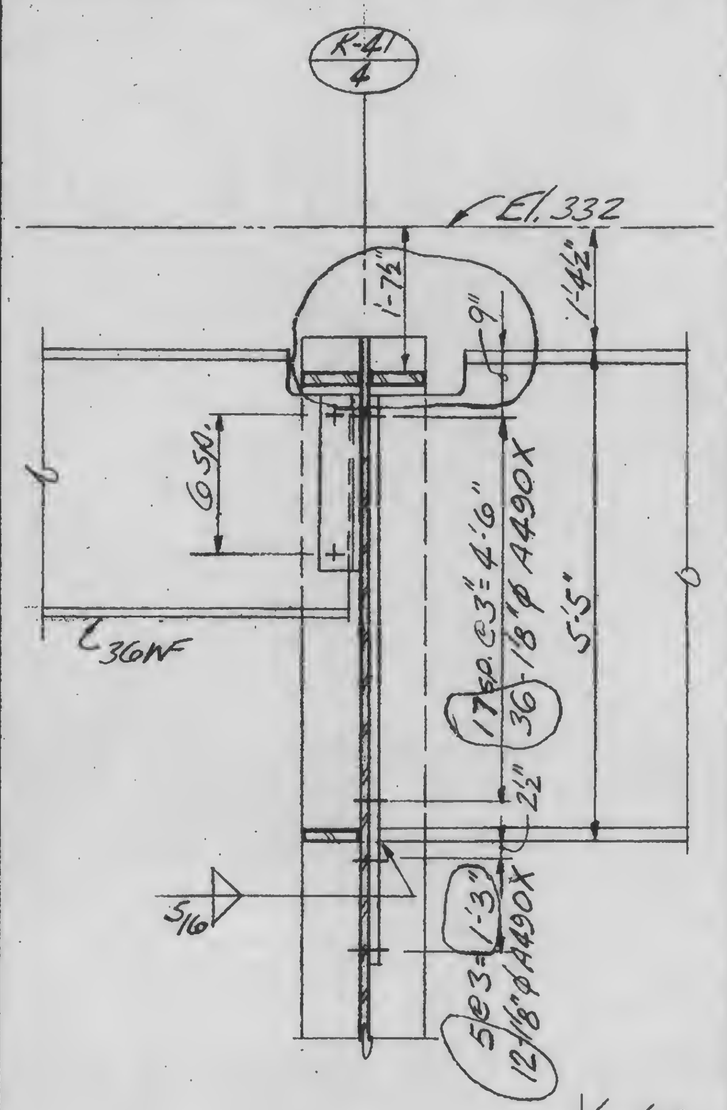

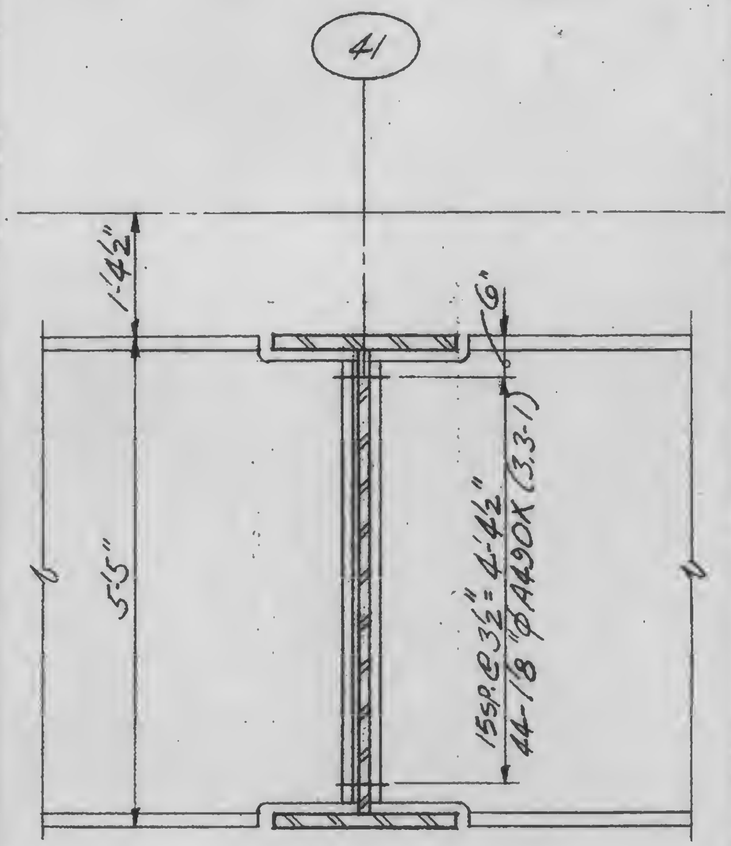

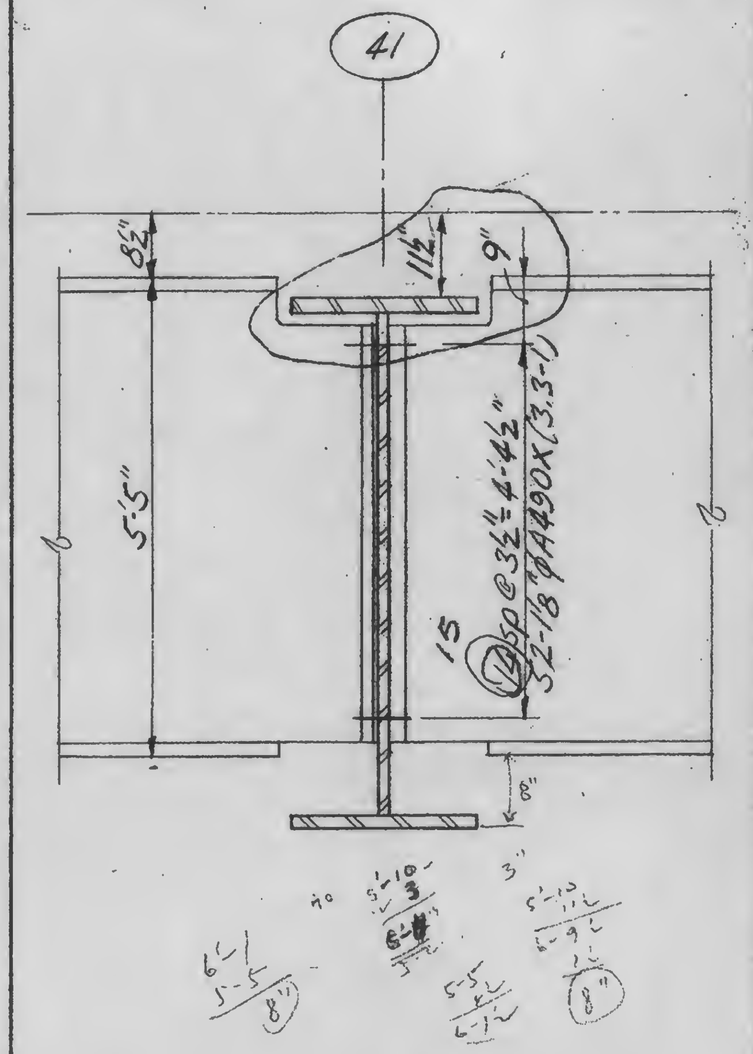

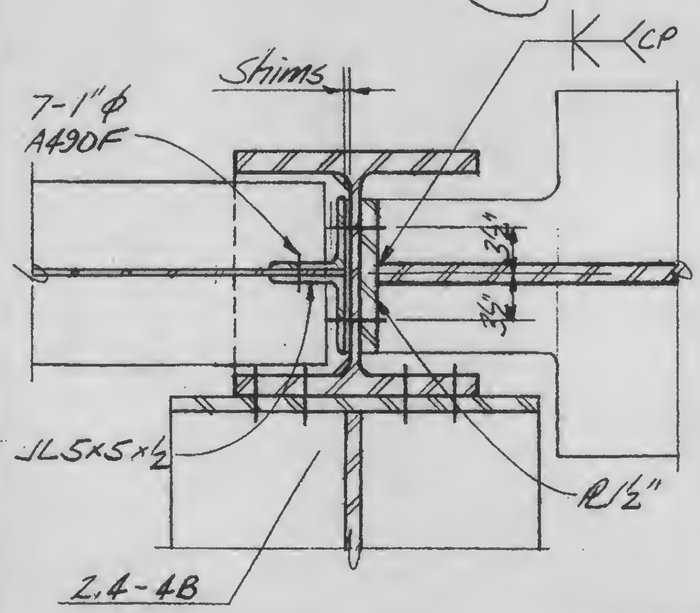

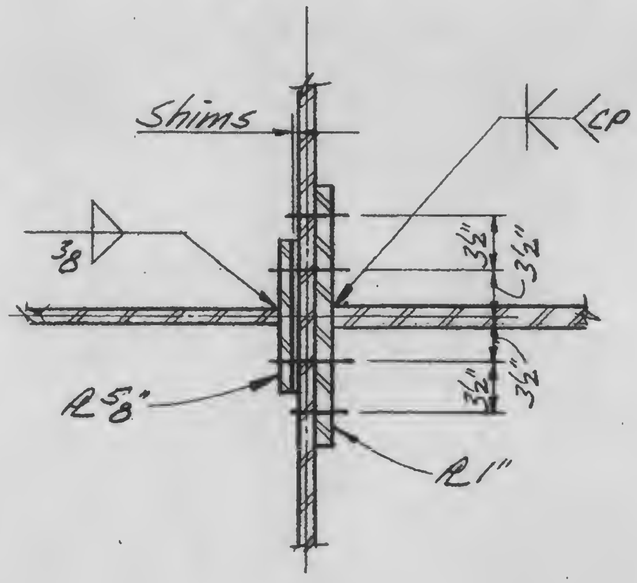

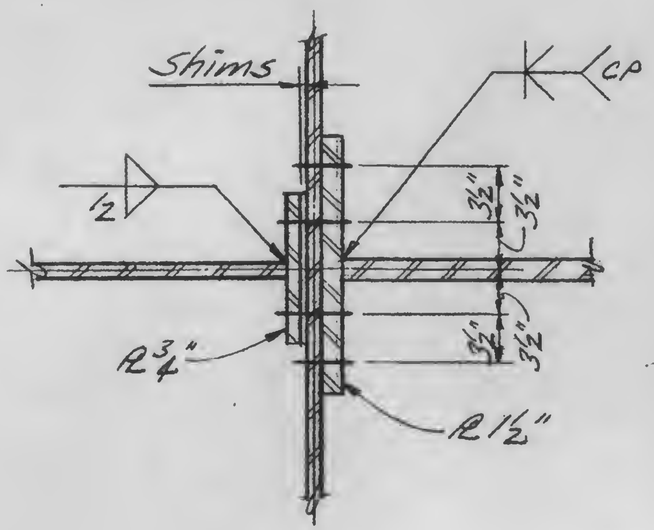

A

B

C

13-K3.3-3

LICENSED PROFESSIONAL ENGINEER
LESLIE E. ROBERTSON
No. 34360
UNIVERSITY OF THE STATE OF NEW YORK

DESIGNED

DRAWN

REVIEWED

SKILLING, HELLE, CHRISTIANSEN, ROBERTSON

PROJECT: THE WORLD TRADE CENTER | TITLE: GIRDER CONNECTION DETAILS | DATE: 11-3-72

REVISIONS

Released for construction 11-20-72

12-11-72

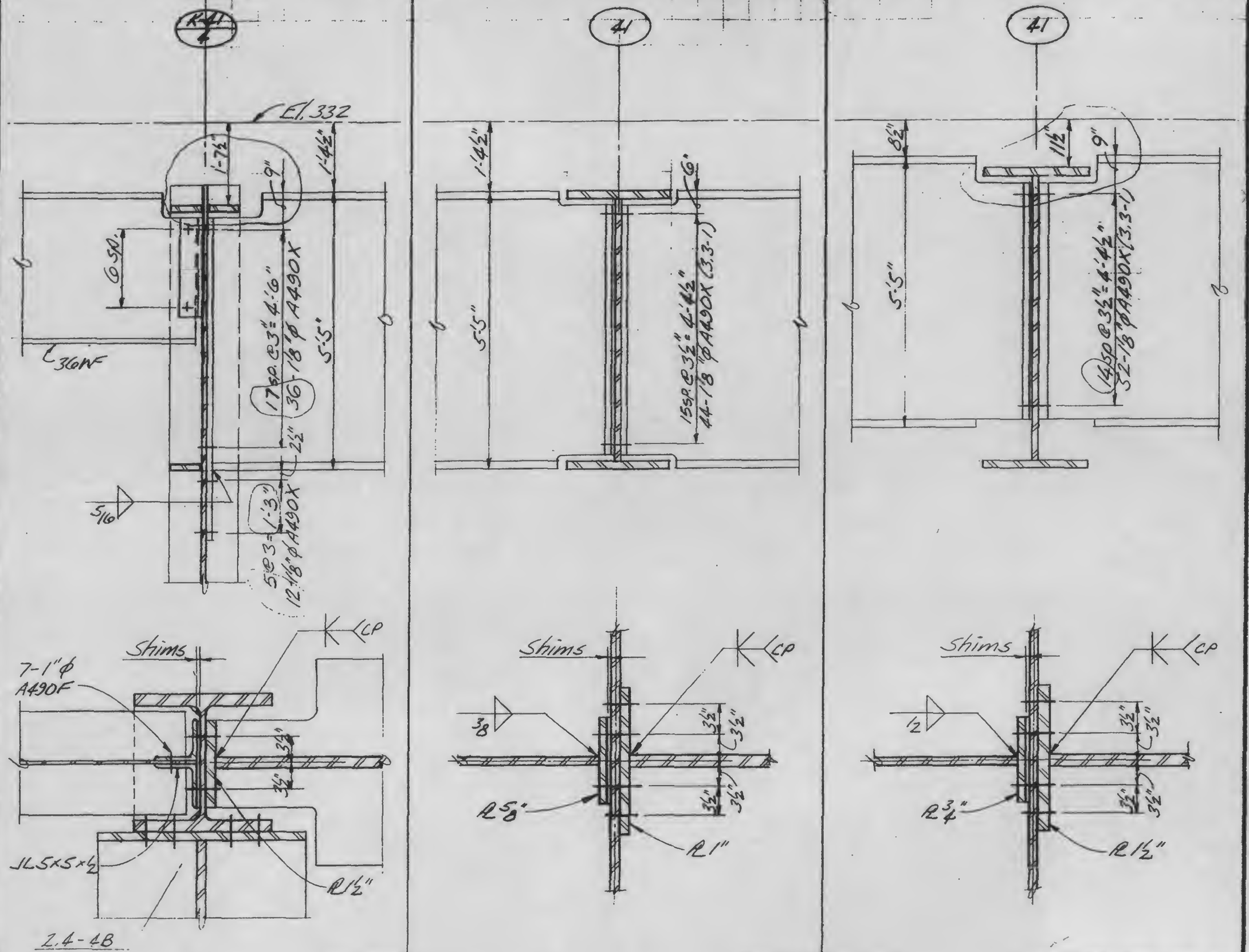

LICENSED PROFESSIONAL ENGINEER
LESLIE E. ROBERTSON
No. 34360
UNIVERSITY OF THE STATE OF NEW YORK

DESIGNED

DRAWN

REVIEWED

13-K3.3-3

SKILLING, HELLE, CHRISTIANSEN, ROBERTSON — Structural & Civil Engineers

PROJECT: THE WORLD TRADE CENTER

TITLE: GIRDER CONNECTION DETAILS

DATE: 11-3-72

REVISIONS

Released for construction 11-20-72

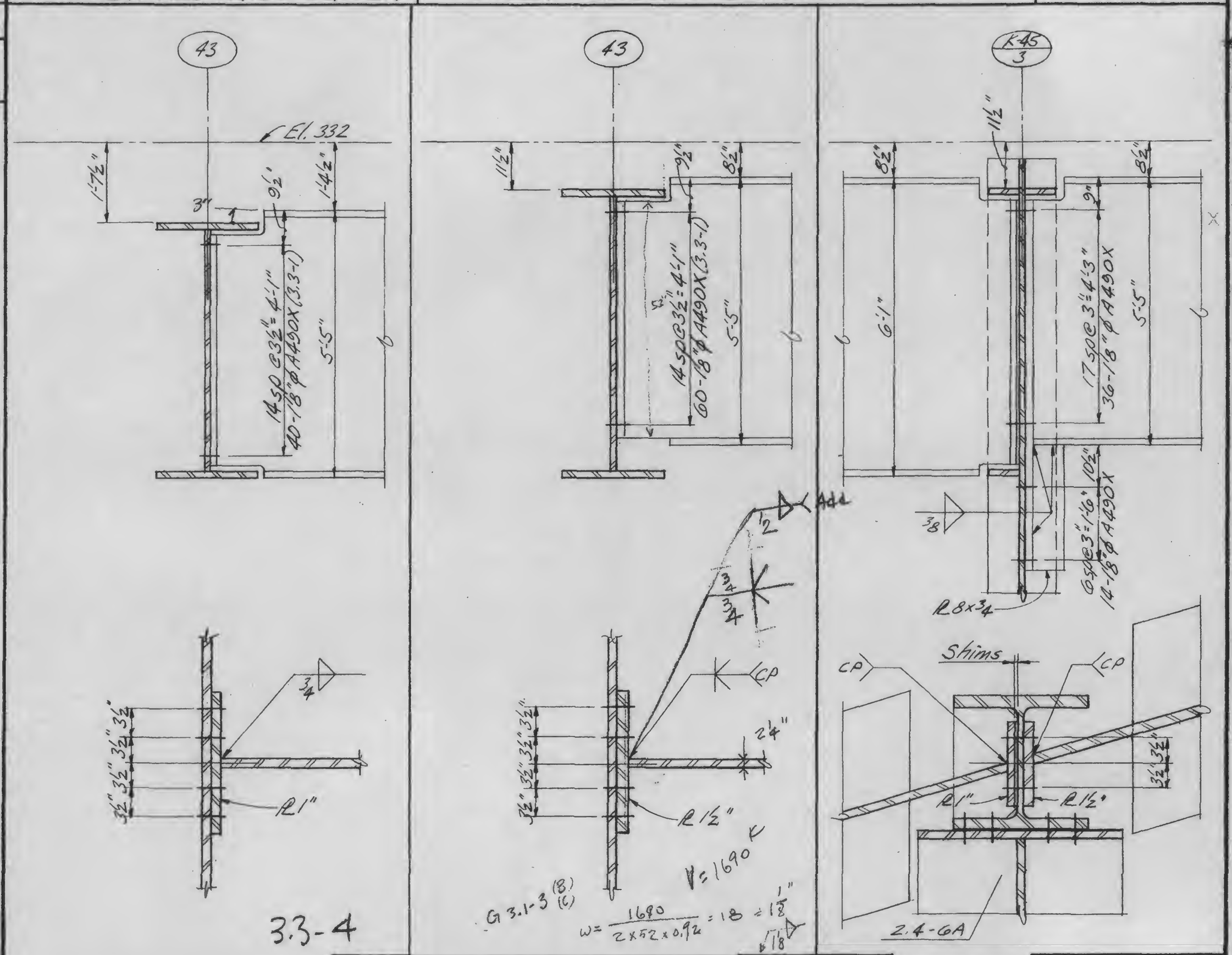

LICENSED PROFESSIONAL ENGINEER — LESLIE E. ROBERTSON — No 34360 — UNIVERSITY OF THE STATE OF NEW YORK

DESIGNED

DRAWN

REVIEWED

A | B | C

13-K3.3-4

SKILLING, HELLE, CHRISTIANSEN, ROBERTSON — Structural [redacted] Engineers

PROJECT: THE WORLD TRADE CENTER

TITLE: GIRDER CONNECTION DETAILS

DATE: 11-3-72

REVISIONS

Released for construction 11-20-72

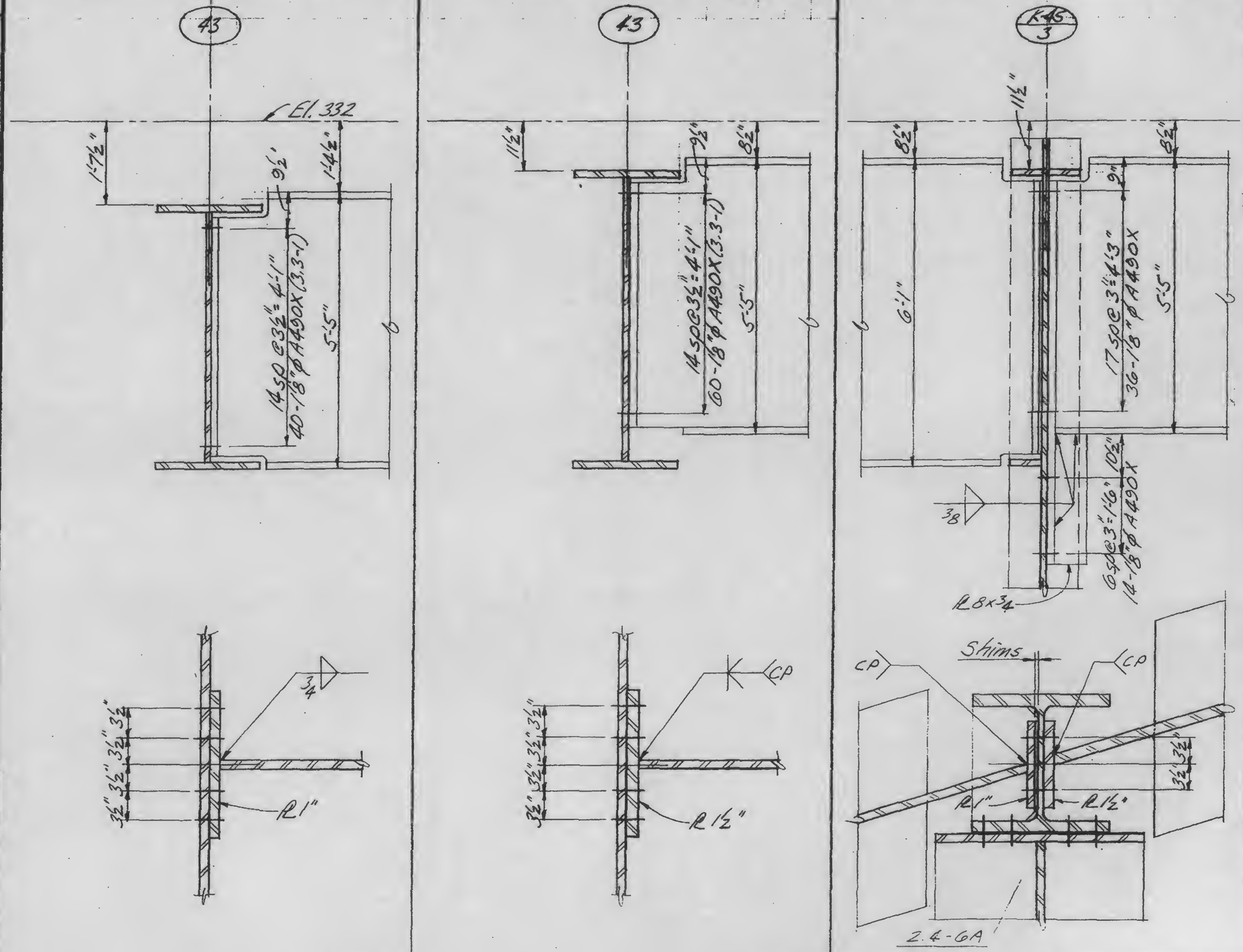

A

B

C

13-K3.3-4

LICENSED PROFESSIONAL ENGINEER — LESLIE E. ROBERTSON — No 34360 — UNIVERSITY OF THE STATE OF NEW YORK

DESIGNED

DRAWN

REVIEWED

SKILLING, HELLE, CHRISTIANSEN, ROBERTSON — Structural & Civil Engineers

PROJECT: THE WORLD TRADE CENTER

TITLE: GIRDER CONNECTION DETAILS

DATE: 11-3-72

REVISIONS

Released for construction 11-20-72

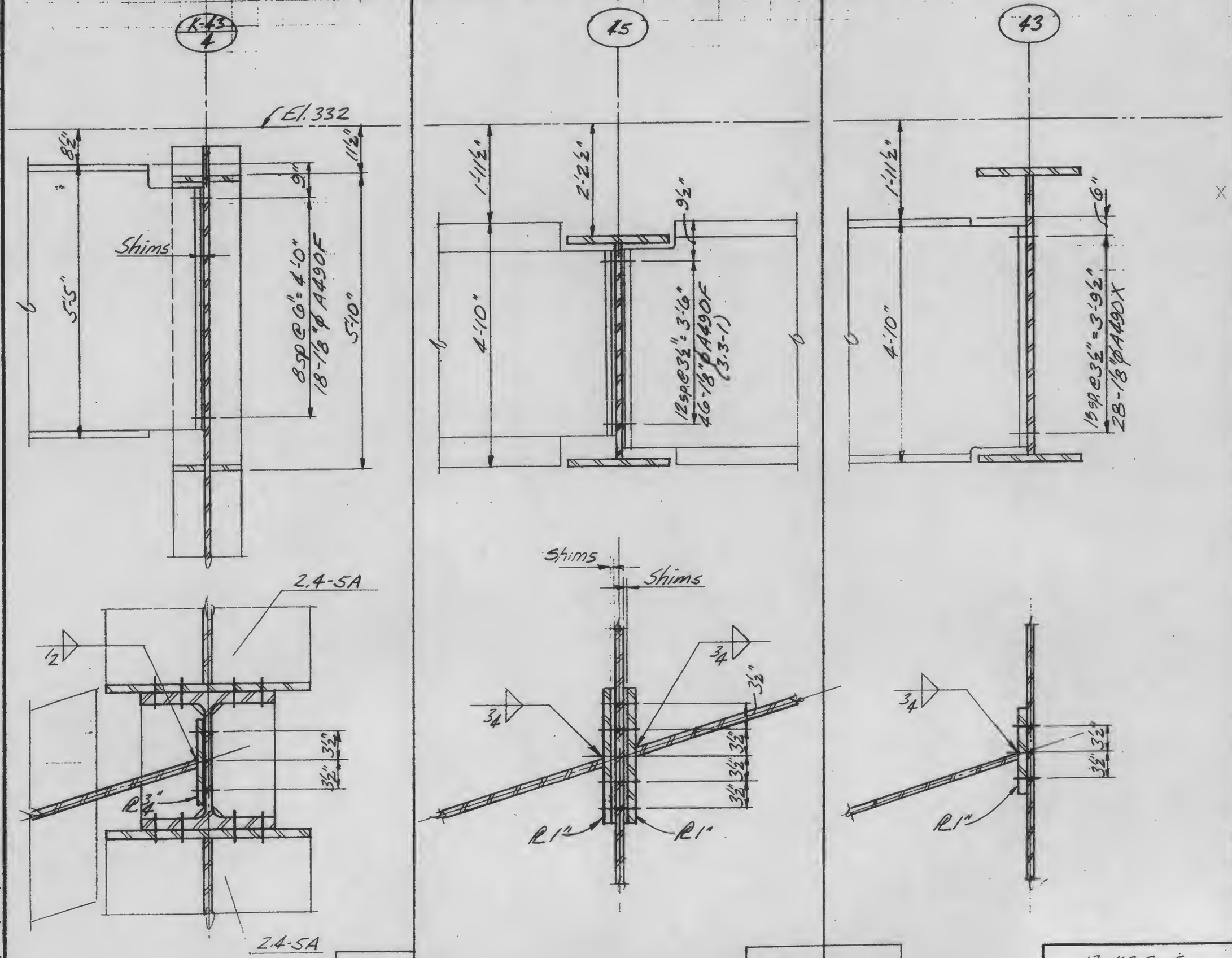

LICENSED PROFESSIONAL ENGINEER — LESLIE E. ROBERTSON — No 34360 — UNIVERSITY OF THE STATE OF NEW YORK

DESIGNED

DRAWN

REVIEWED

13-K3.3-5

SKILLING, HELLE, CHRISTIANSEN, ROBERTSON — Structural & Civil Engineers

PROJECT: THE WORLD TRADE CENTER | TITLE: GIRDER CONNECTION DETAILS | DATE: 11-3-72

REVISIONS

Released for construction 11-20-72

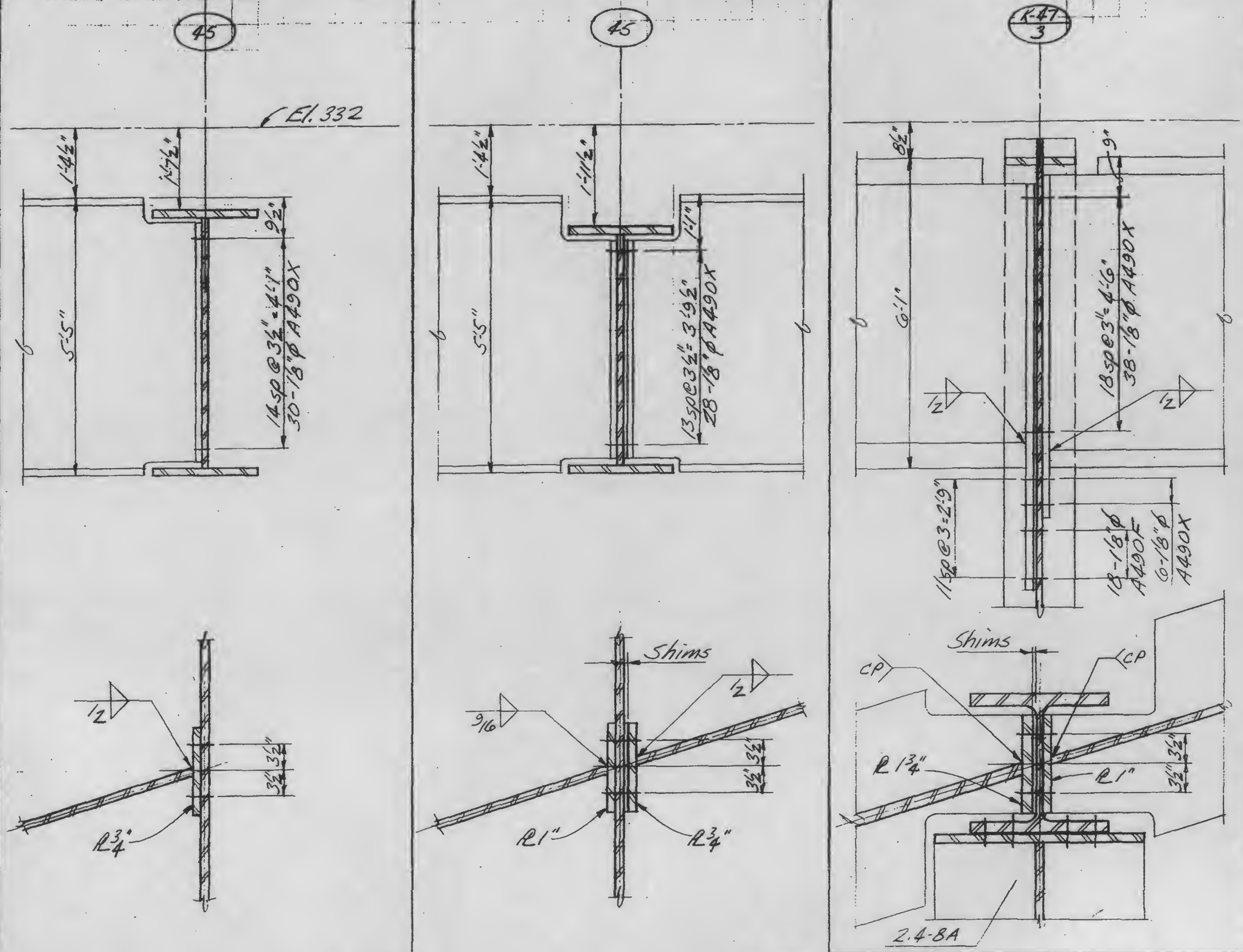

LICENSED PROFESSIONAL ENGINEER — LESLIE E. ROBERTSON — No 34360 — UNIVERSITY OF THE STATE OF NEW YORK

DESIGNED

DRAWN

REVIEWED

13-K3.3-6

SKILLING, HELLE, CHRISTIANSEN, ROBERTSON — Structural & Civil Engineers

PROJECT: THE WORLD TRADE CENTER

TITLE: GIRDER CONNECTION DETAILS

DATE: 11-3-72

REVISIONS

Released for construction 11-20-72

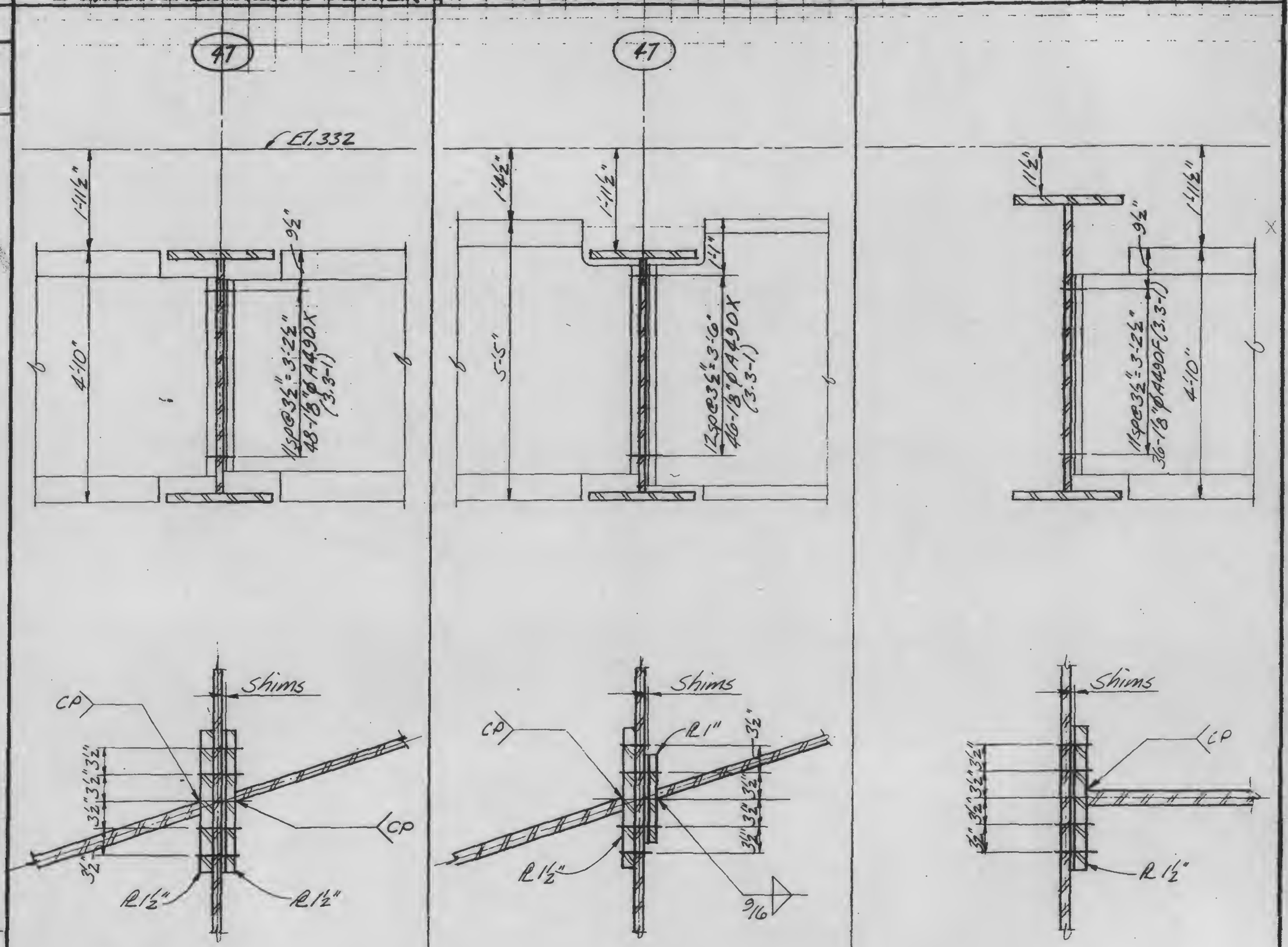

LICENSED PROFESSIONAL ENGINEER — LESLIE E. ROBERTSON — No 34360 — UNIVERSITY OF THE STATE OF NEW YORK

DESIGNED

DRAWN

REVIEWED

13-K3.3-7

SKILLING, HELLE, CHRISTIANSEN, ROBERTSON — Structural & Civil Engineers

PROJECT: THE WORLD TRADE CENTER

TITLE: GIRDER CONNECTION DETAILS

DATE: 11-3-72

REVISIONS

Released for construction 11-20-72

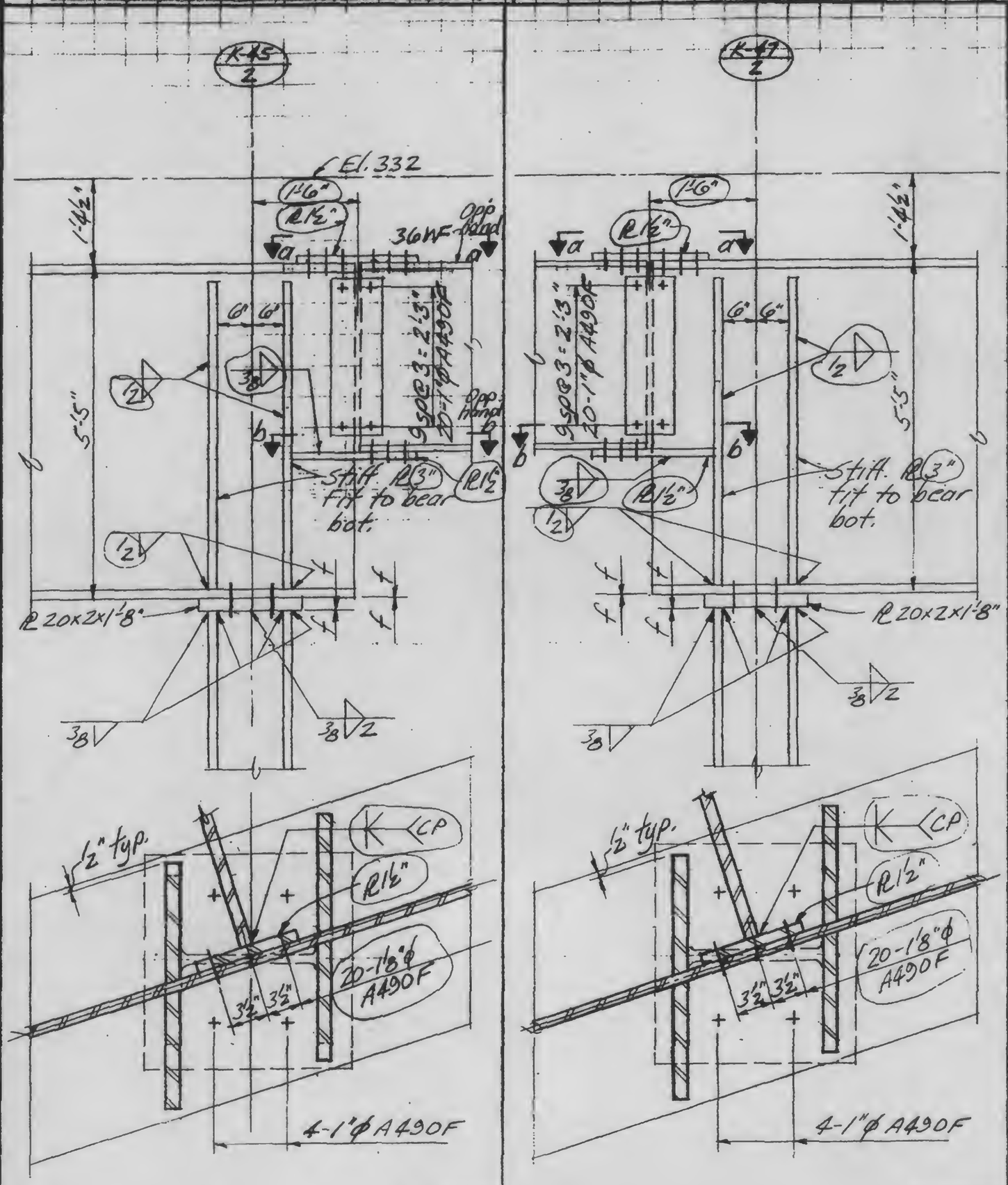

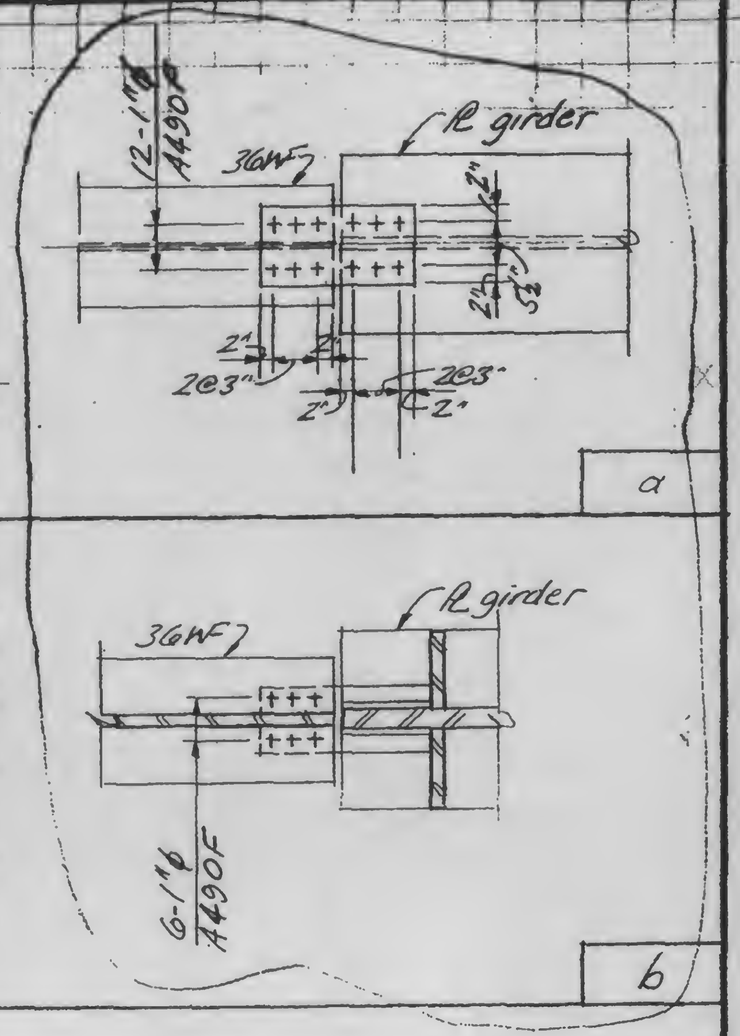

LICENSED PROFESSIONAL ENGINEER — LESLIE E. ROBERTSON — No 34360 — UNIVERSITY OF THE STATE OF NEW YORK

DESIGNED

DRAWN

REVIEWED

13-K3.3-B

SKILLING, HELLE, CHRISTIANSEN, ROBERTSON — Structural & Civil Engineers

PROJECT: THE WORLD TRADE CENTER

TITLE: GIRDER CONNECTION DETAILS

DATE: 11-3-72

REVISIONS

Released for construction 11-20-72

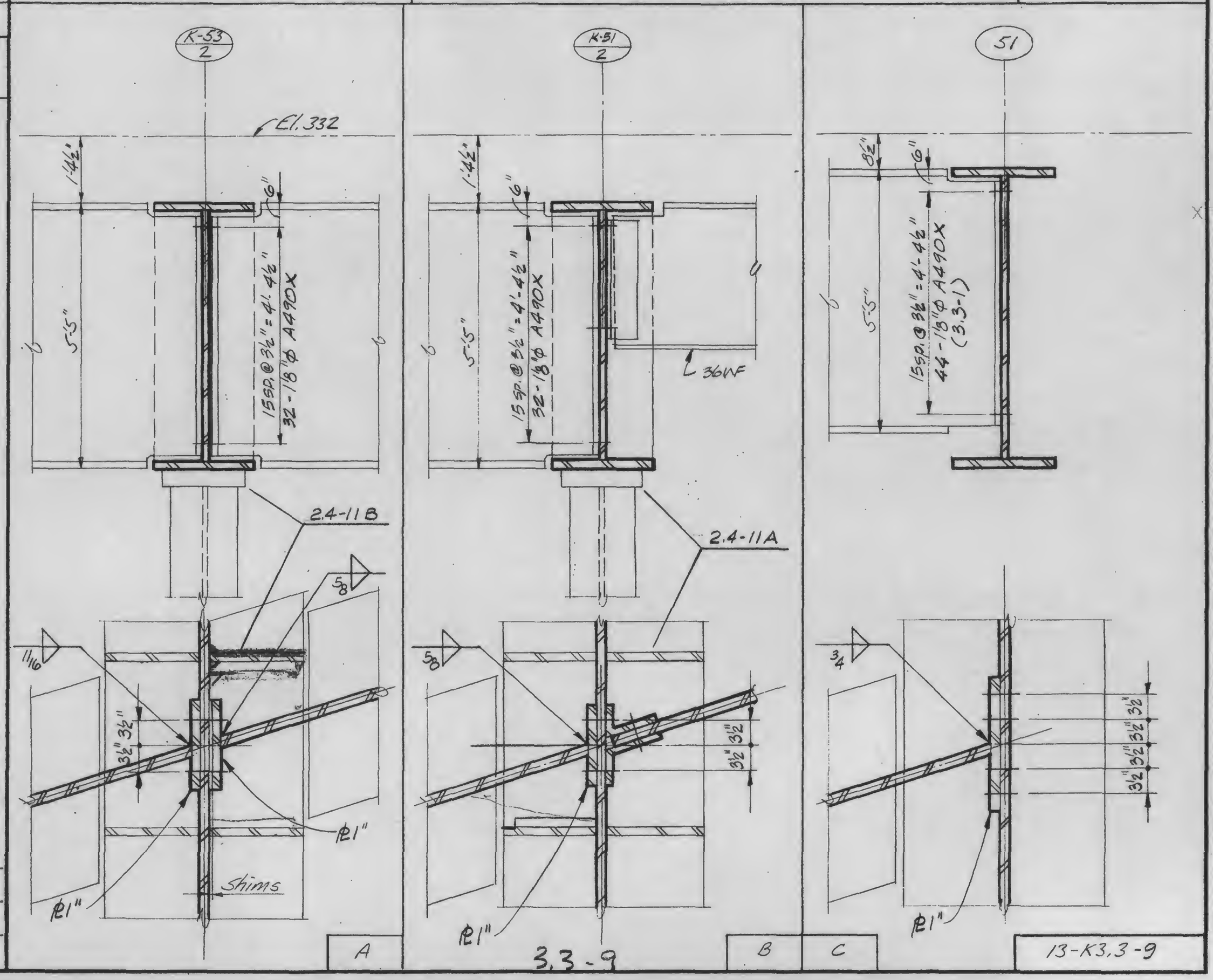

3.3-9

13-K3.3-9

LICENSED PROFESSIONAL ENGINEER — LESLIE E. ROBERTSON — No 34360 — UNIVERSITY OF THE STATE OF NEW YORK

DESIGNED

DRAWN

REVIEWED

SKILLING, HELLE, CHRISTIANSEN, ROBERTSON — Structural & Civil Engineers

PROJECT: THE WORLD TRADE CENTER

TITLE: GIRDER CONNECTION DETAILS

DATE: 11-3-72

REVISIONS

Released for construction 11-20-72

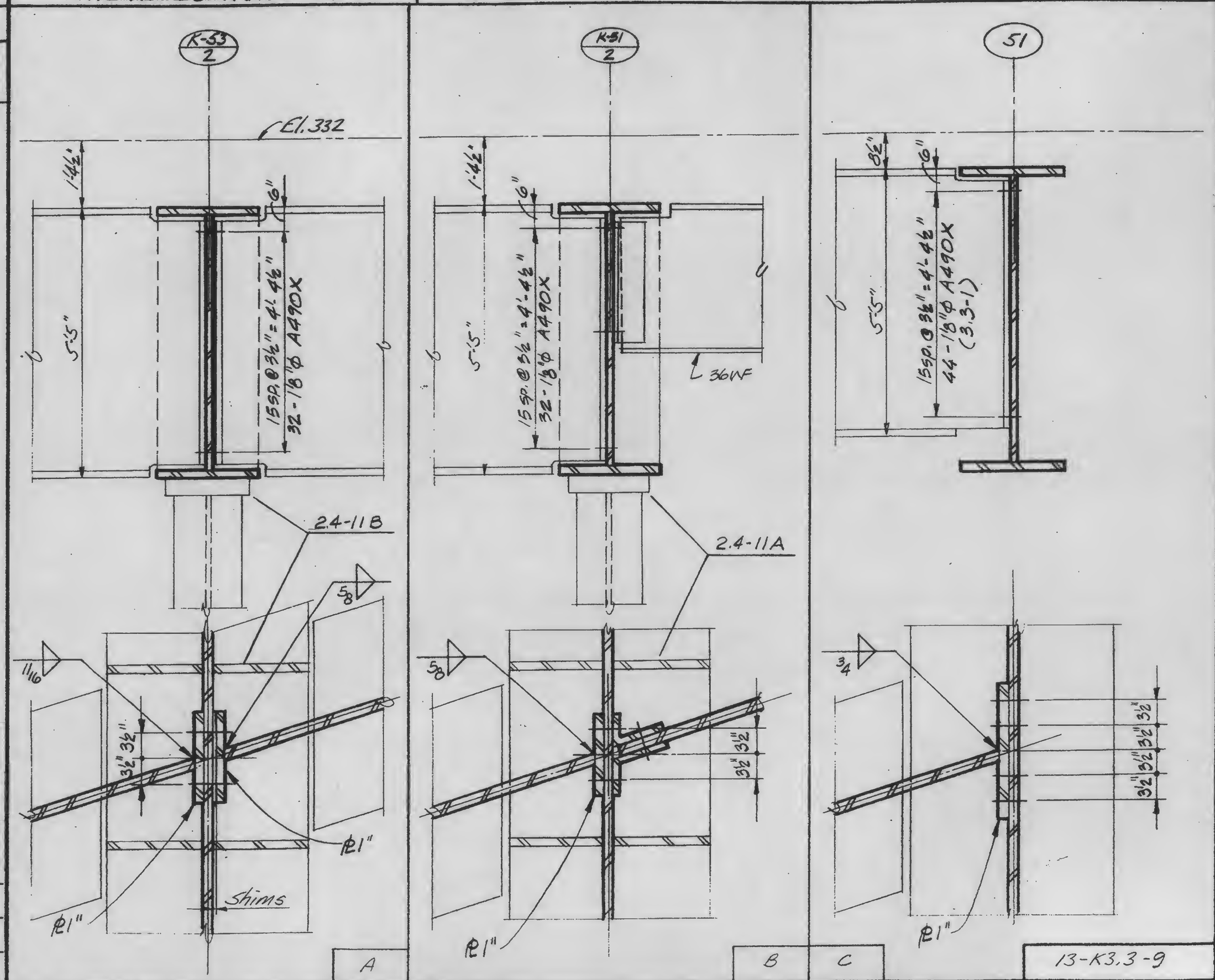

LICENSED PROFESSIONAL ENGINEER — LESLIE E. ROBERTSON — No. 34360 — UNIVERSITY OF THE STATE OF NEW YORK

DESIGNED

DRAWN

REVIEWED

13-K3.3-9

SKILLING, HELLE, CHRISTIANSEN, ROBERTSON — Structural & Civil Engineers

PROJECT: THE WORLD TRADE CENTER

TITLE: GIRDER CONNECTION DETAILS

DATE: 11-3-72

REVISIONS

Released for construction 11-20-72

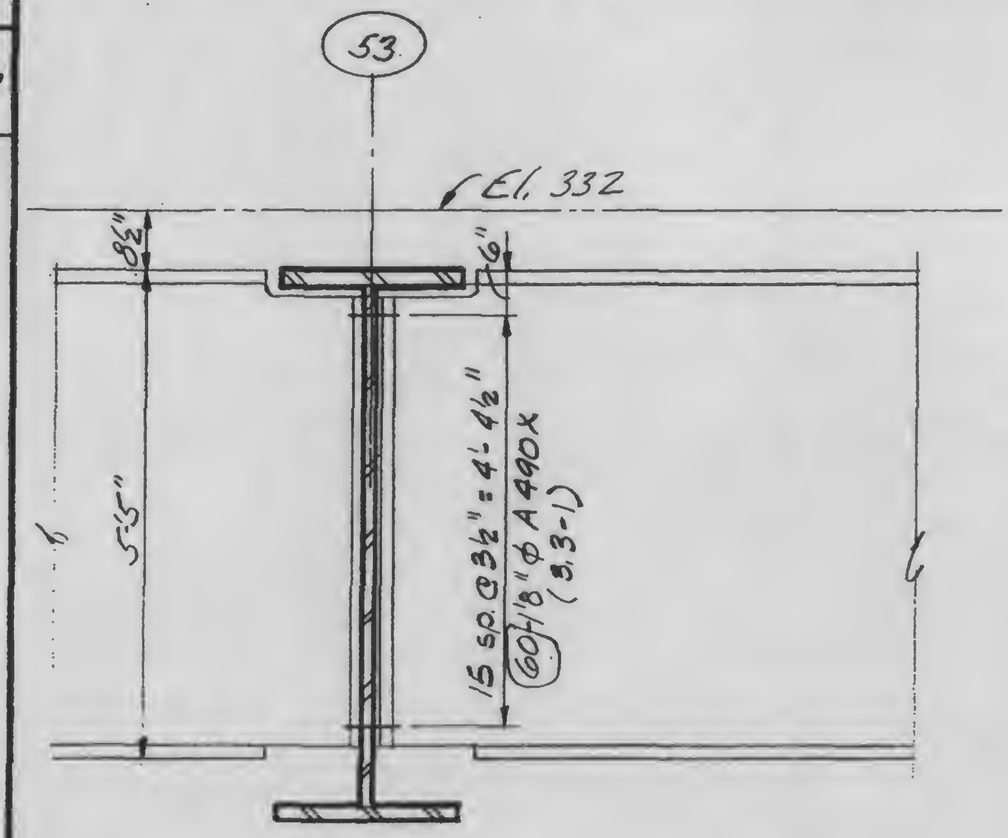

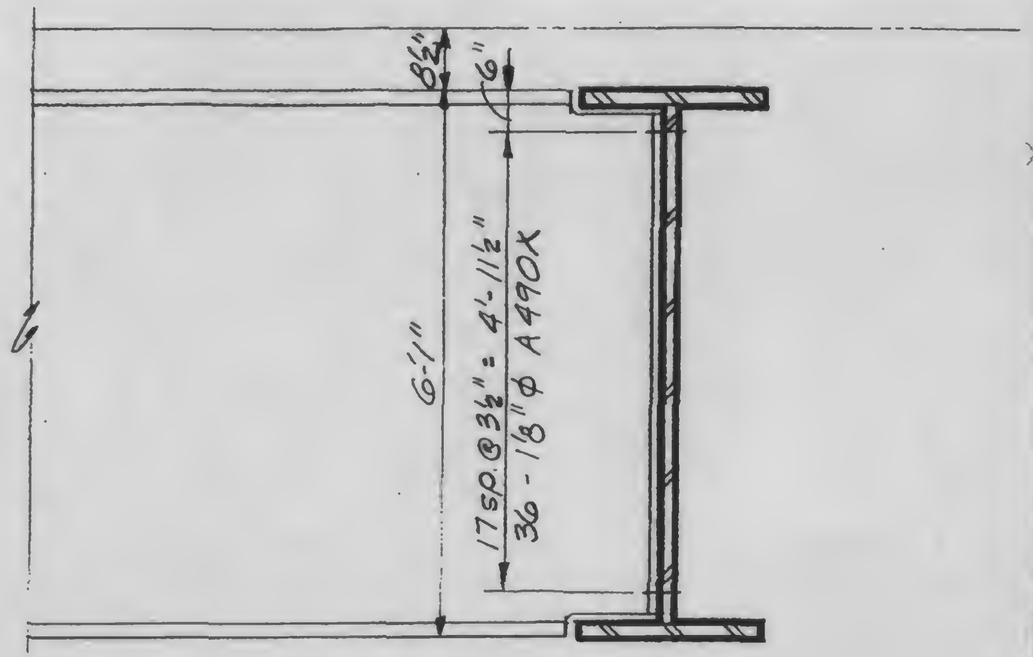

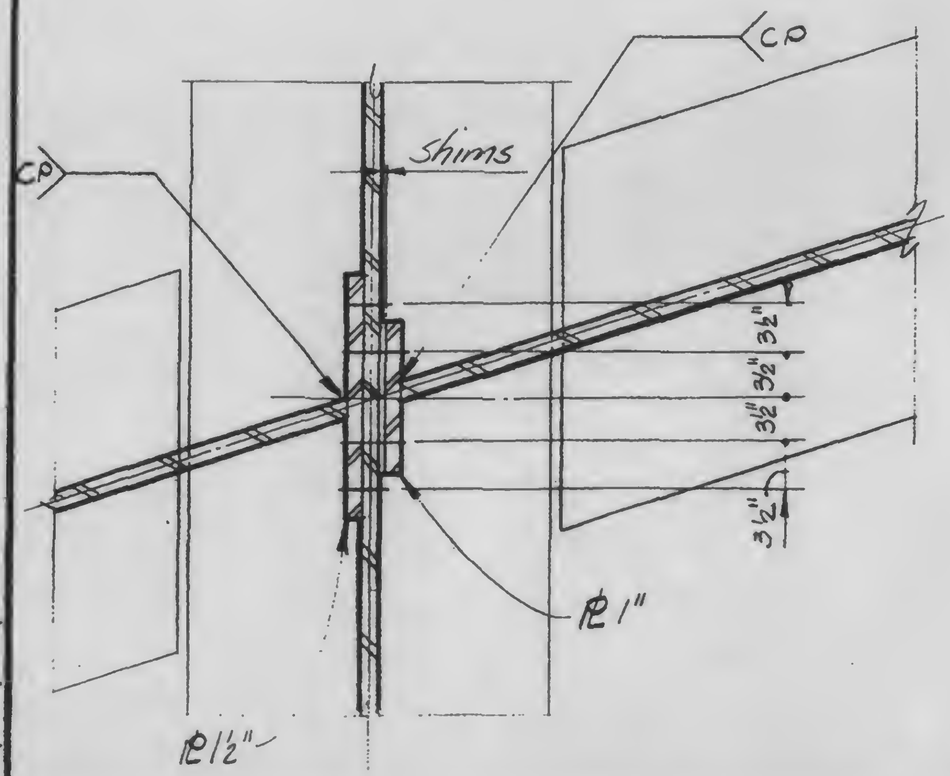

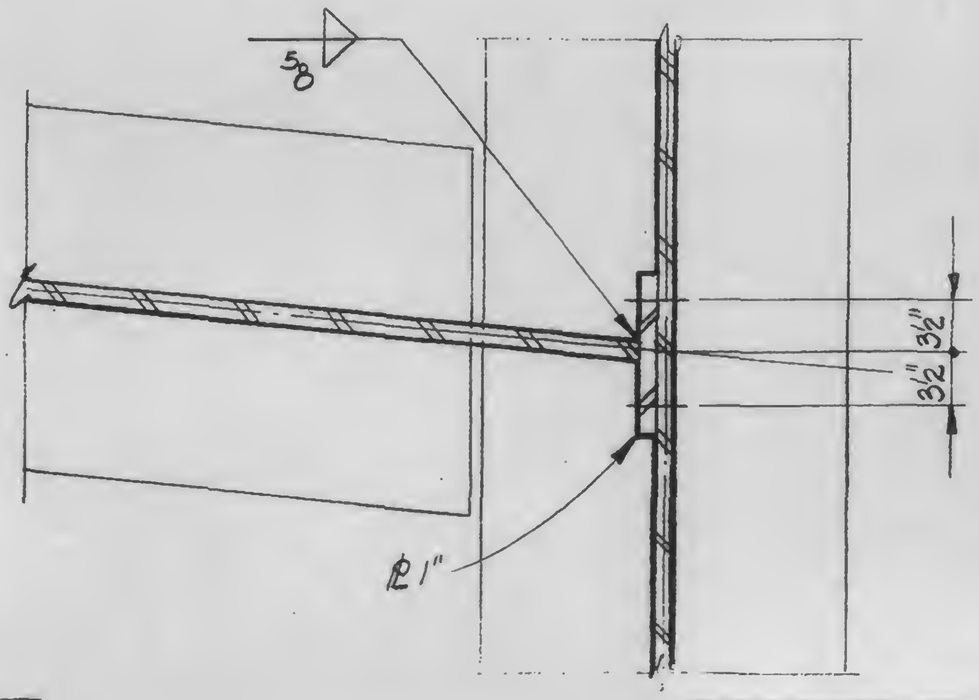

LICENSED PROFESSIONAL ENGINEER — LESLIE E. ROBERTSON — No. 34960 — UNIVERSITY OF THE STATE OF NEW YORK

DESIGNED

DRAWN

REVIEWED

A | B

13-K3.3-10

SKILLING, HELLE, CHRISTIANSEN, ROBERTSON — Structural & Civil Engineers

PROJECT: THE WORLD TRADE CENTER

TITLE: GIRDER CONNECTION DETAILS

DATE: 11-3-72

REVISIONS

Released for construction 11-20-72

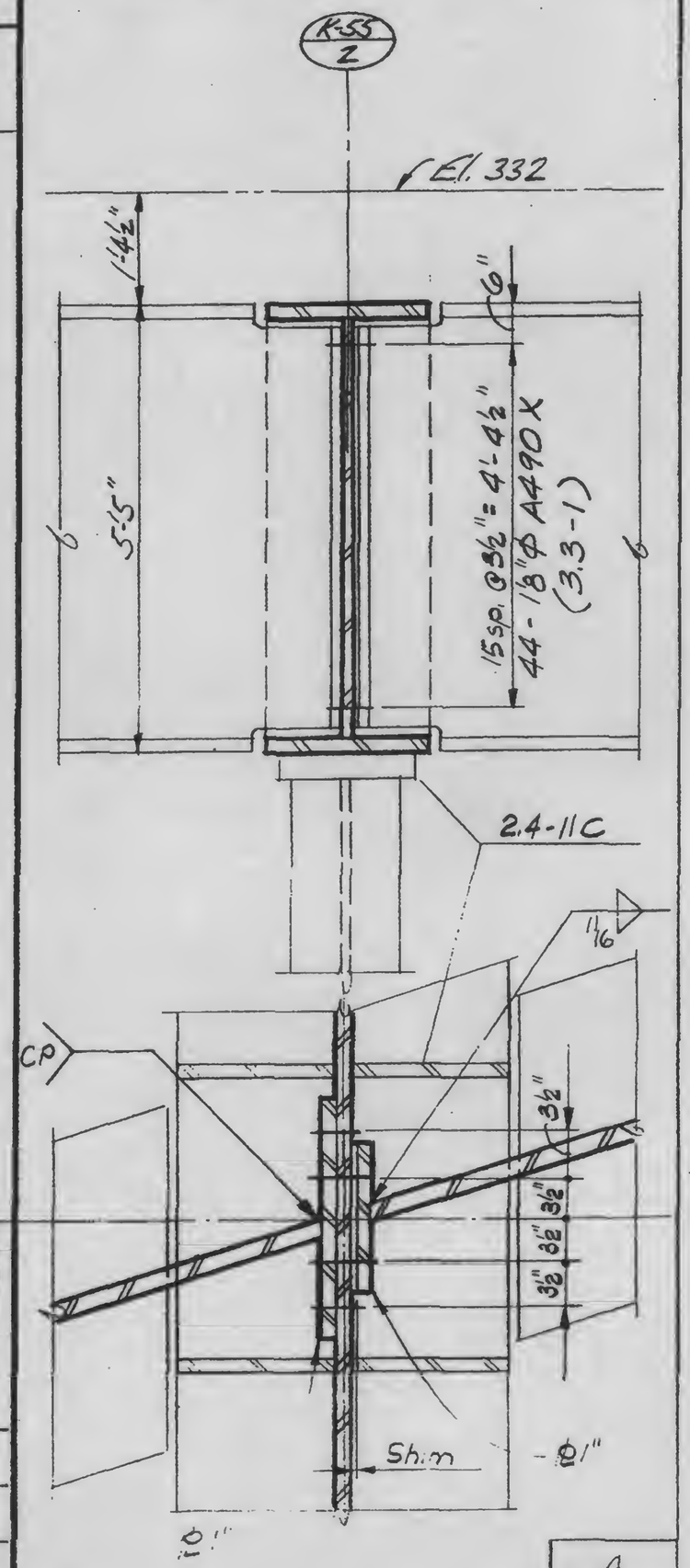

A

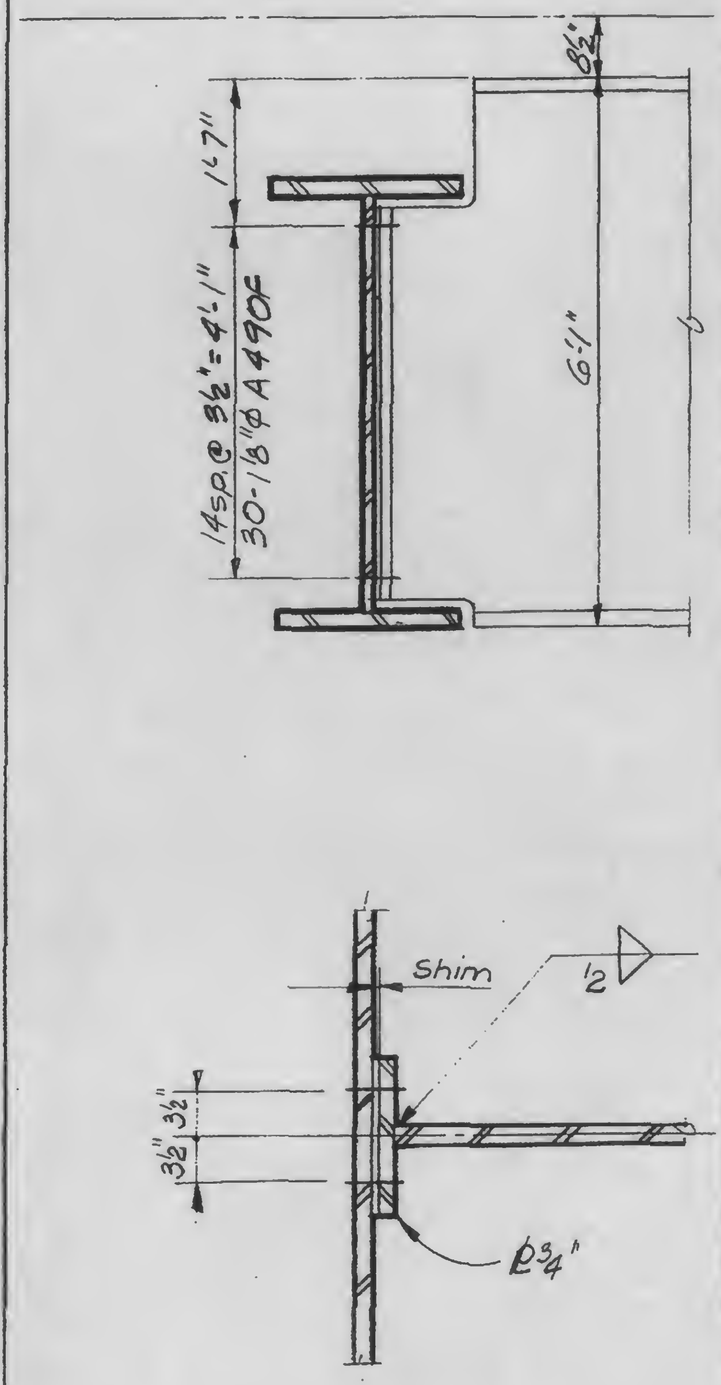

B

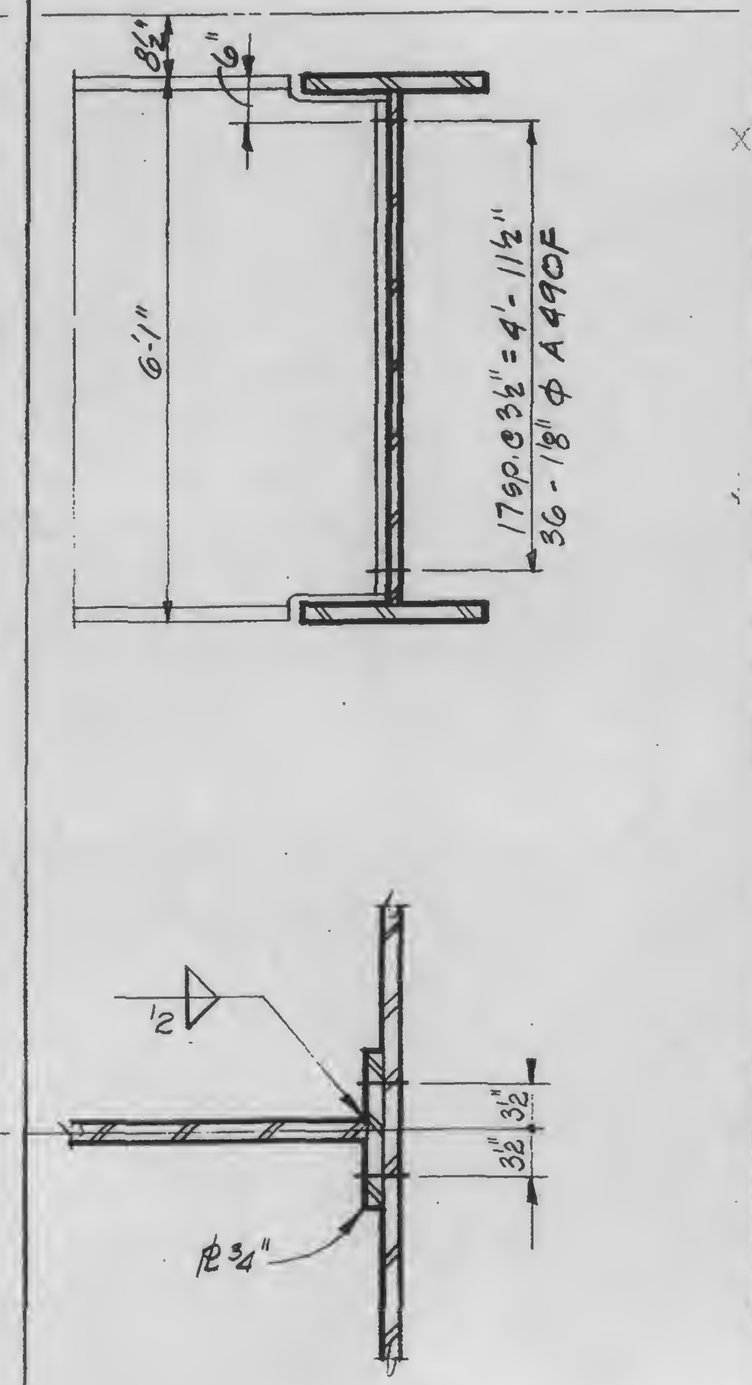

C

13-K3.3-11

LICENSED PROFESSIONAL ENGINEER — LESLIE E. ROBERTSON — No. 34360 — UNIVERSITY OF THE STATE OF NEW YORK

DESIGNED

DRAWN

REVIEWED

SKILLING, HELLE, CHRISTIANSEN, ROBERTSON — Structural & Civil Engineers

PROJECT: THE WORLD TRADE CENTER

TITLE: GIRDER CONNECTION DETAILS

DATE: 11-3-72

REVISIONS

Released for construction 11-20-72

4-20-73

6-4-73

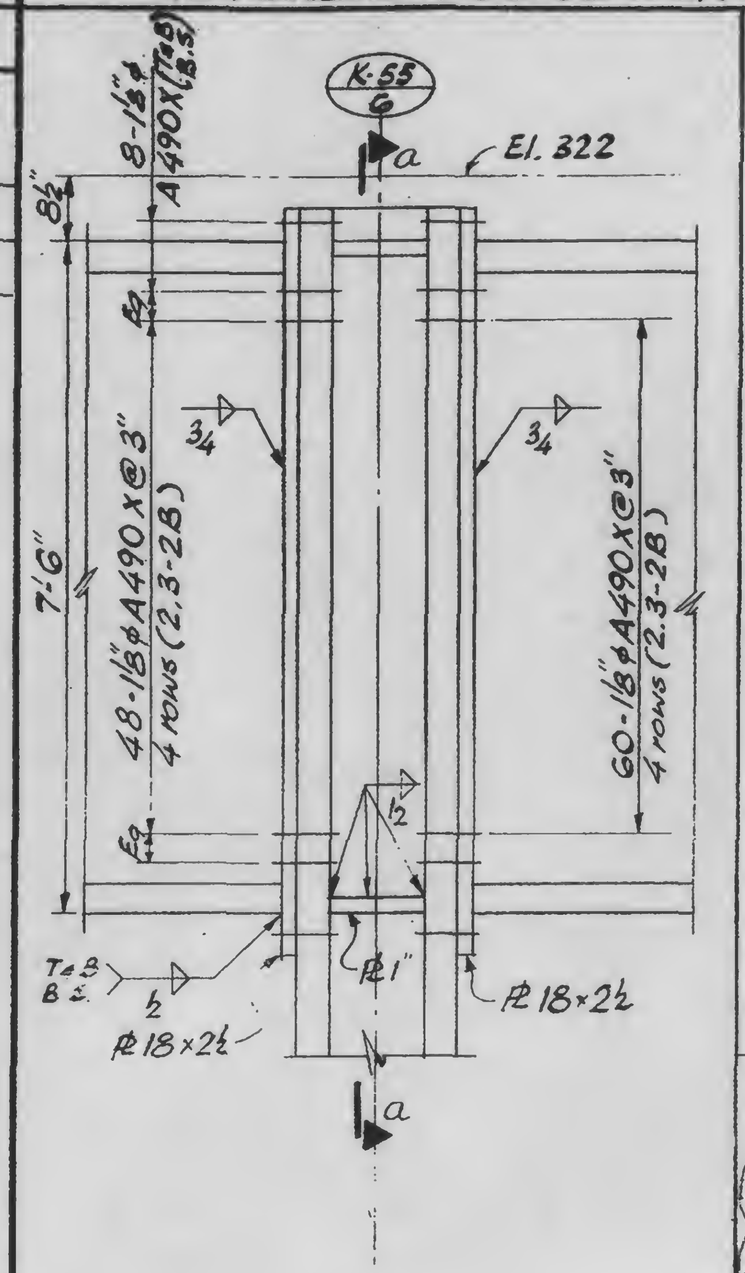

A

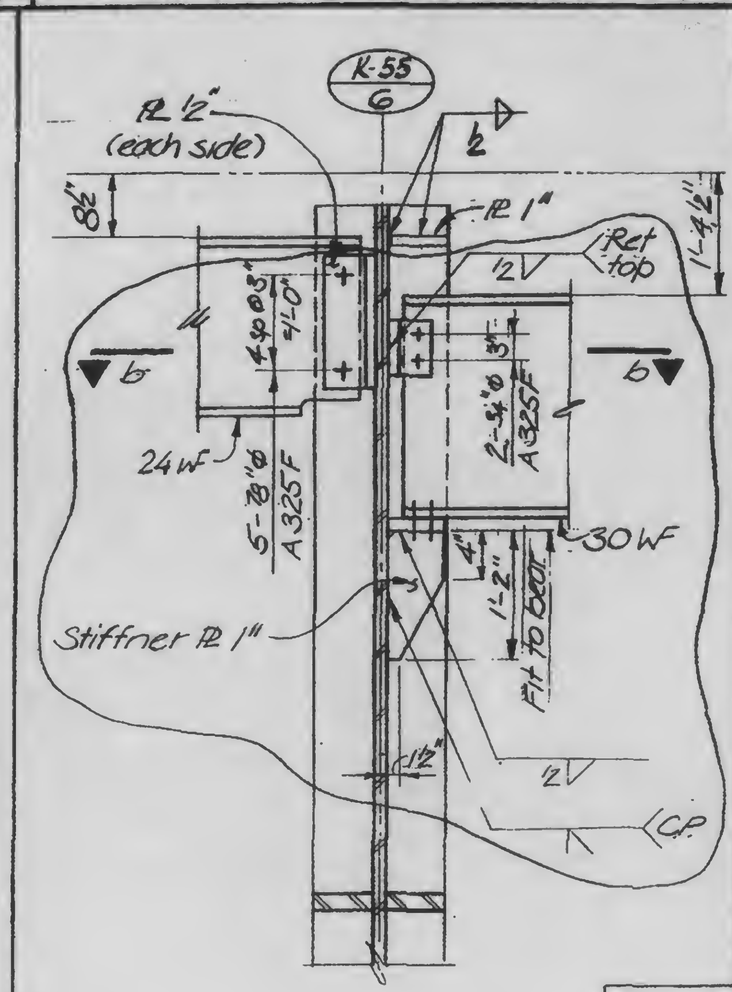

a

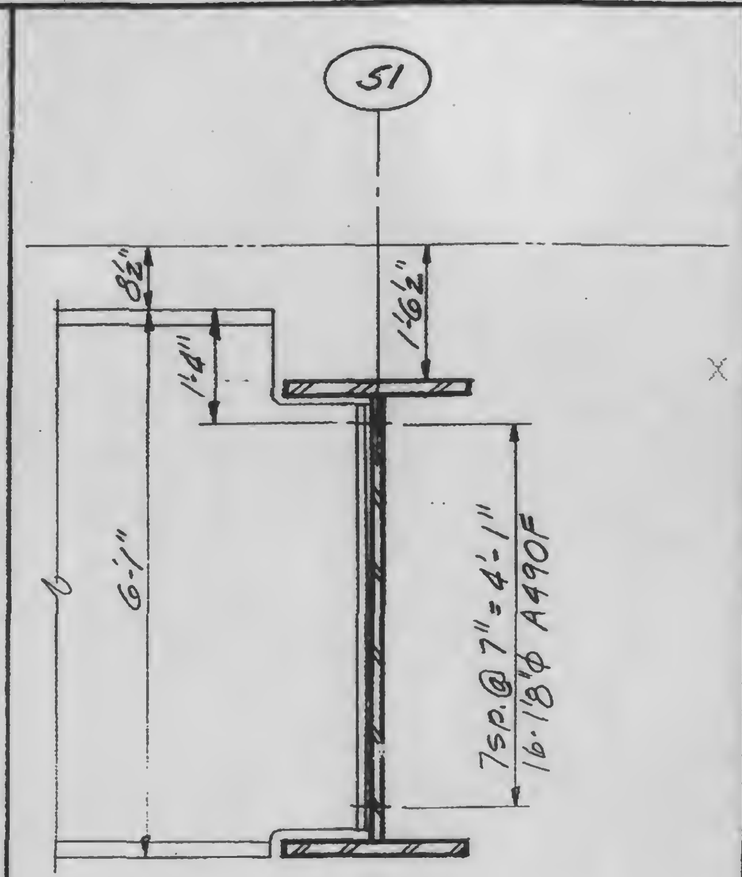

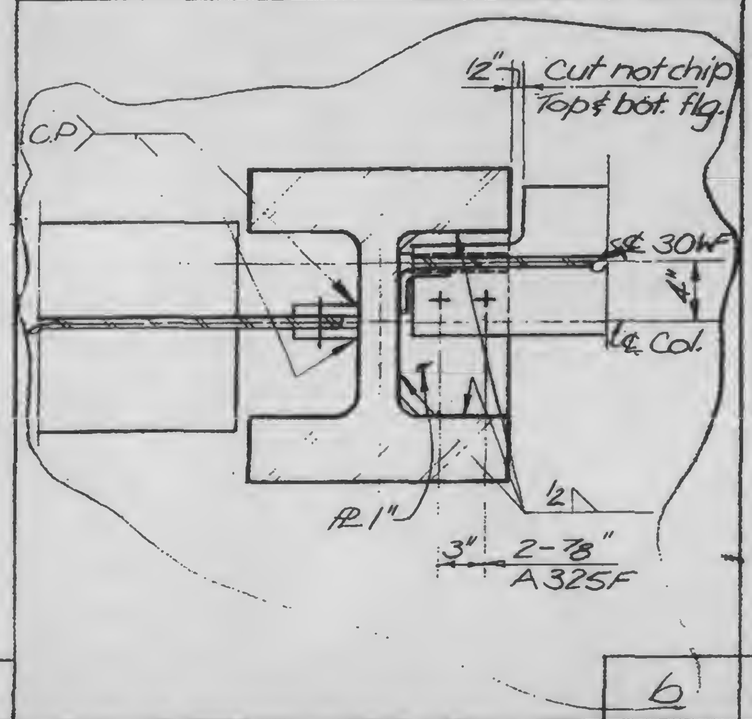

b

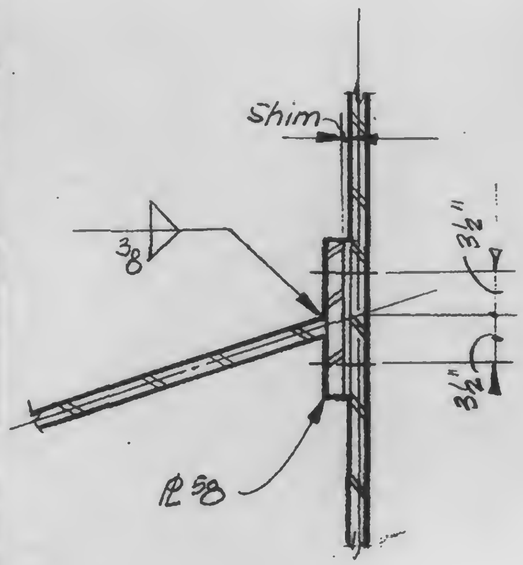

C

13-K3.3-12

LICENSED PROFESSIONAL ENGINEER — LESLIE E. ROBERTSON — No. 34360 — UNIVERSITY OF THE STATE OF NEW YORK

DESIGNED: K. Chiang

DRAWN

REVIEWED

SKILLING, HELLE, CHRISTIANSEN, ROBERTSON — Structural & Civil Engineers

PROJECT: THE WORLD TRADE CENTER

TITLE: GIRDER CONNECTION DETAILS

DATE: 11-3-72

REVISIONS

Released for construction 11-20-72

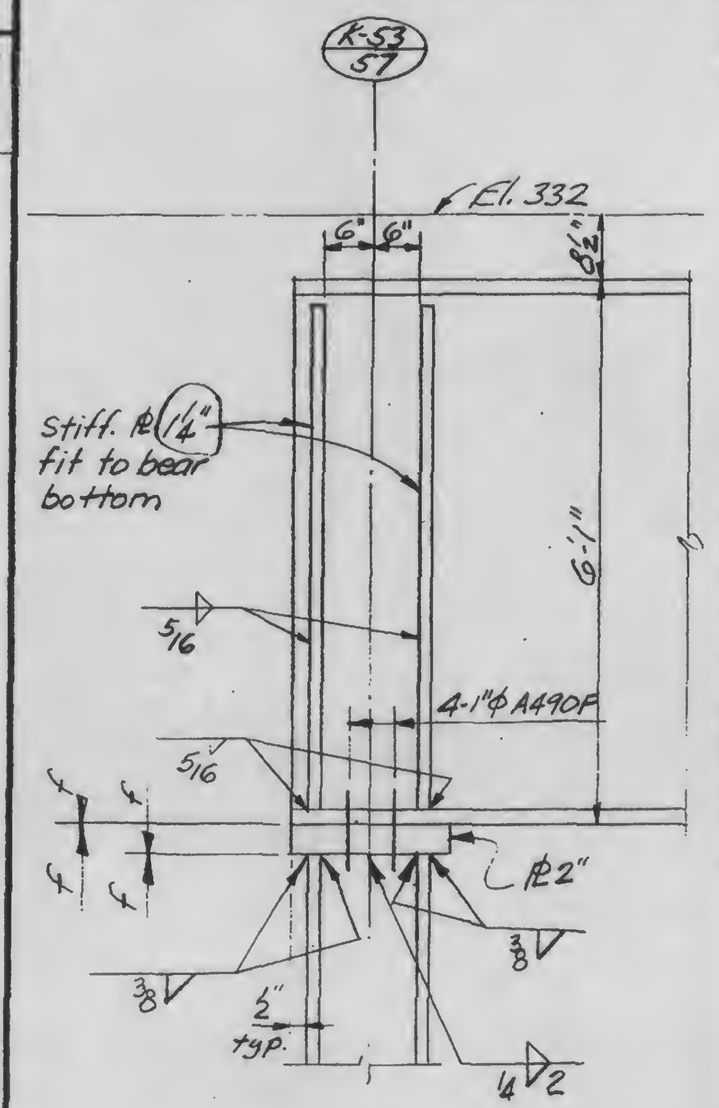

A

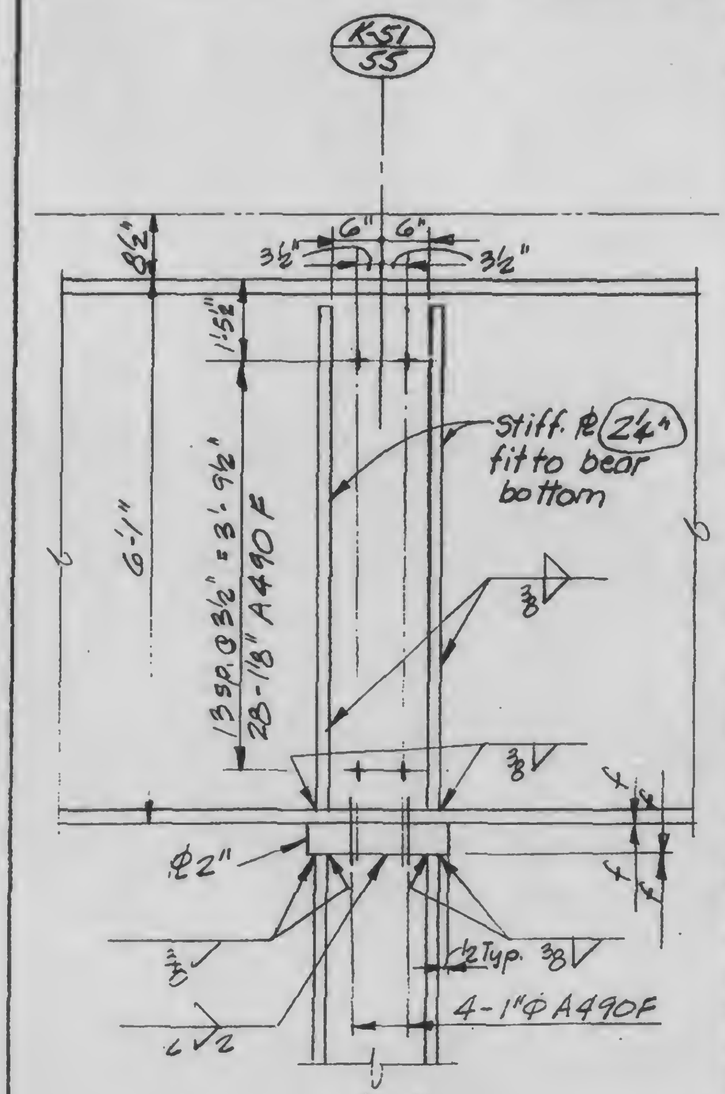

B

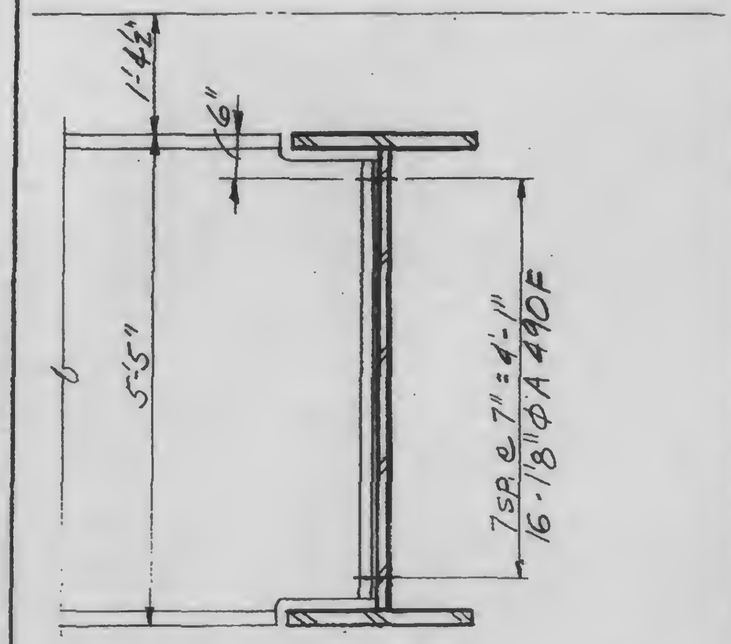

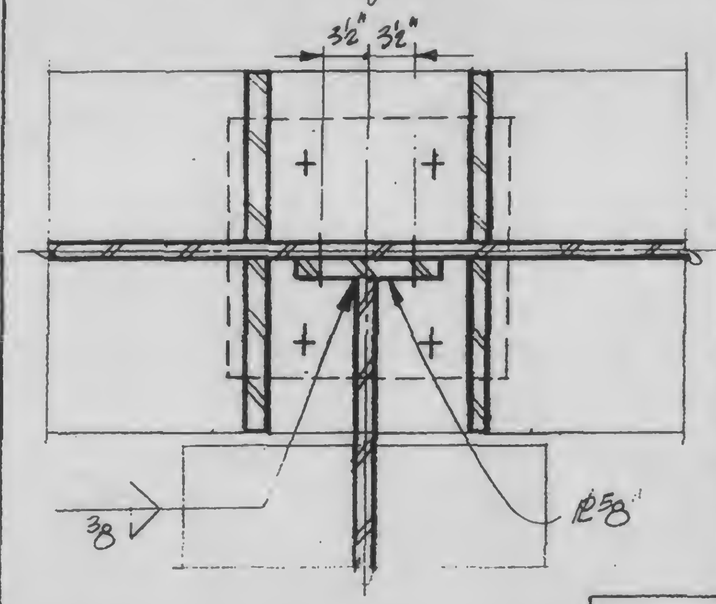

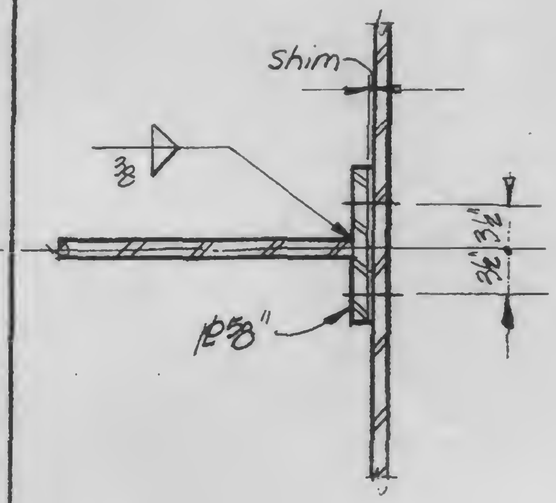

C

LICENSED PROFESSIONAL ENGINEER — LESLIE E. ROBERTSON — No. 34960 — UNIVERSITY OF THE STATE OF NEW YORK

DESIGNED

DRAWN

REVIEWED

13-K3.3-13

SKILLING, HELLE, CHRISTIANSEN, ROBERTSON — Structural & Civil Engineers

PROJECT: THE WORLD TRADE CENTER

TITLE: GIRDER CONNECTION DETAILS

DATE: 12-3-72

REVISIONS

- Released for construction 11-20-72
- 2-5-73
- 6-4-73

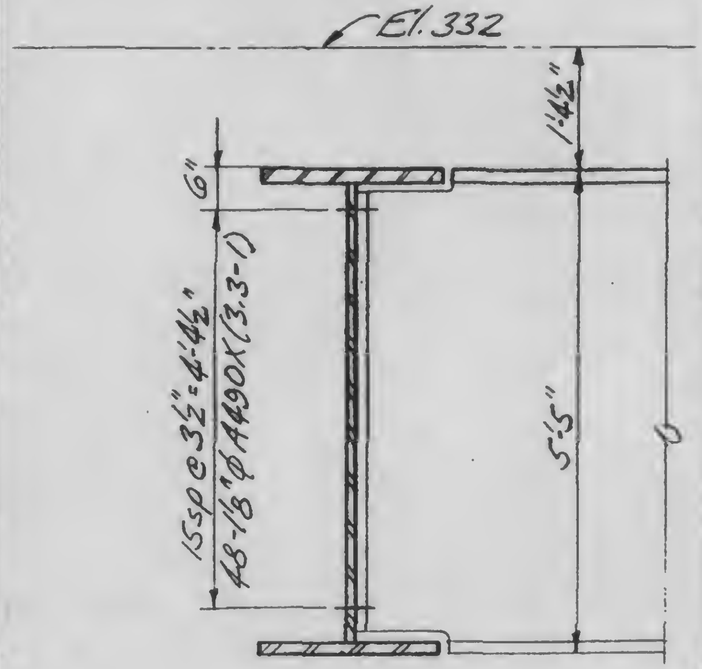

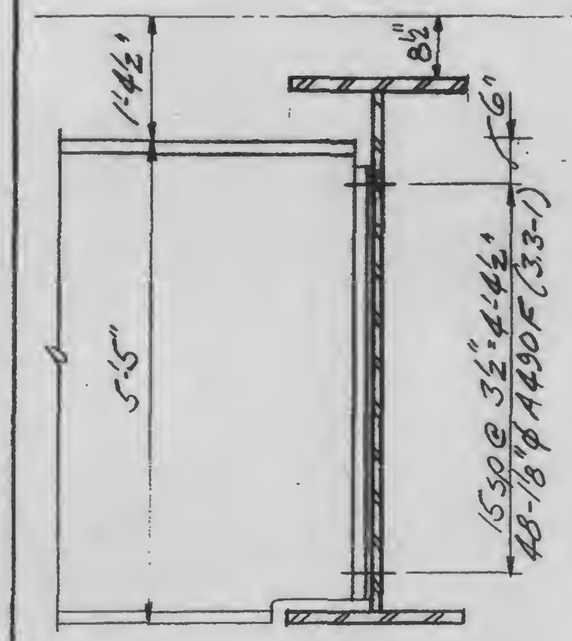

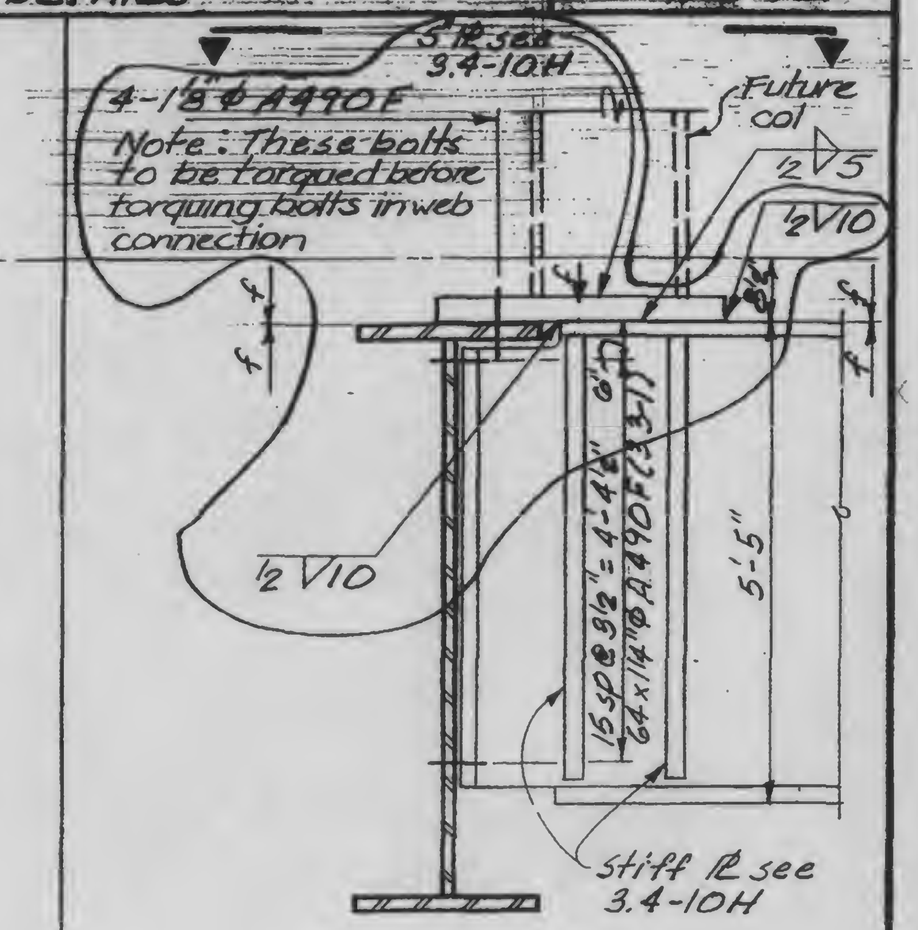

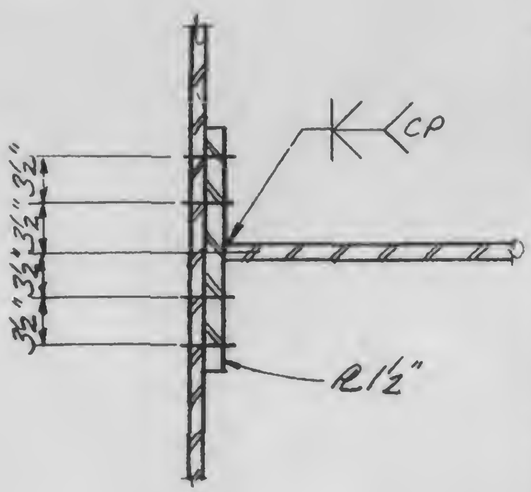

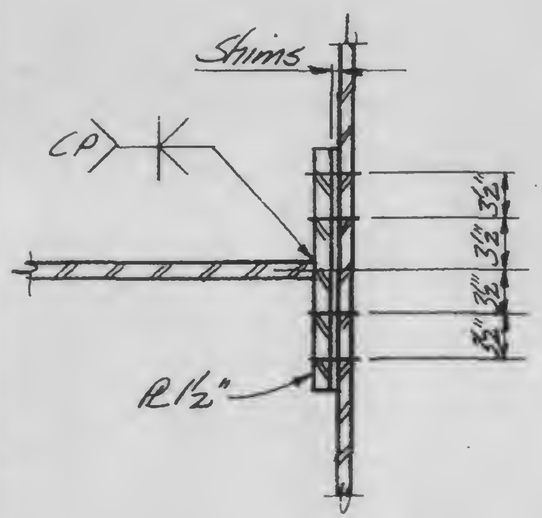

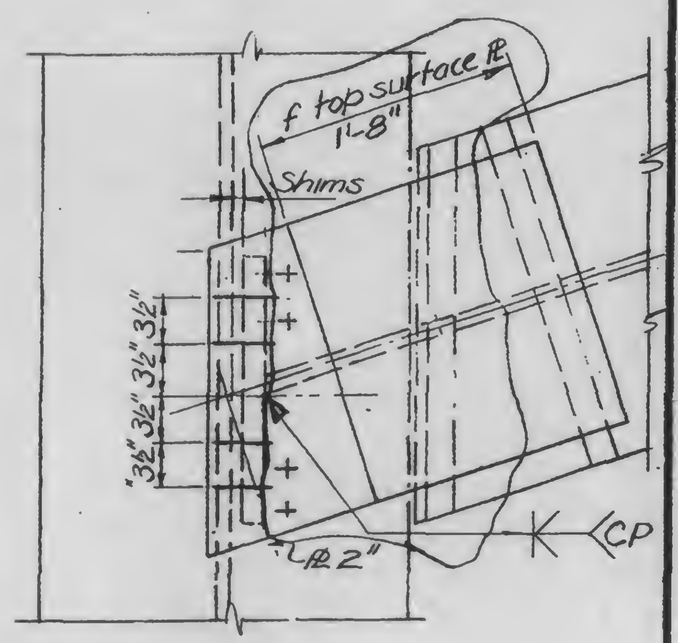

LICENSED PROFESSIONAL ENGINEER — LESLIE E. ROBERTSON — No. 34360 — UNIVERSITY OF THE STATE OF NEW YORK

DESIGNED

DRAWN

REVIEWED

A | B | C

13-K 3.3-14

SKILLING, HELLE, CHRISTIANSEN, ROBERTSON — Structural & Civil Engineers

PROJECT: THE WORLD TRADE CENTER

TITLE: GIRDER CONNECTION DETAILS

DATE: 11-3-72

REVISIONS

Released for construction 11-20-72

2-5-73

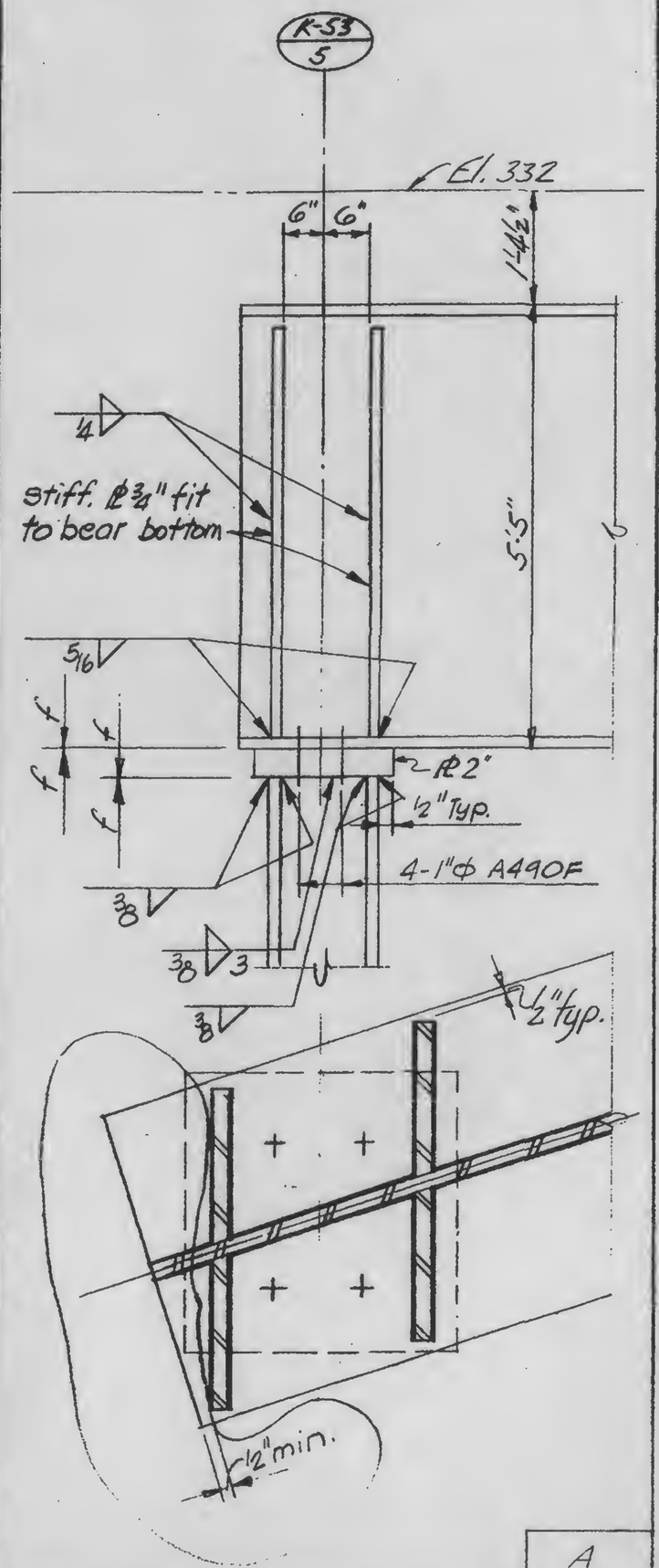

A

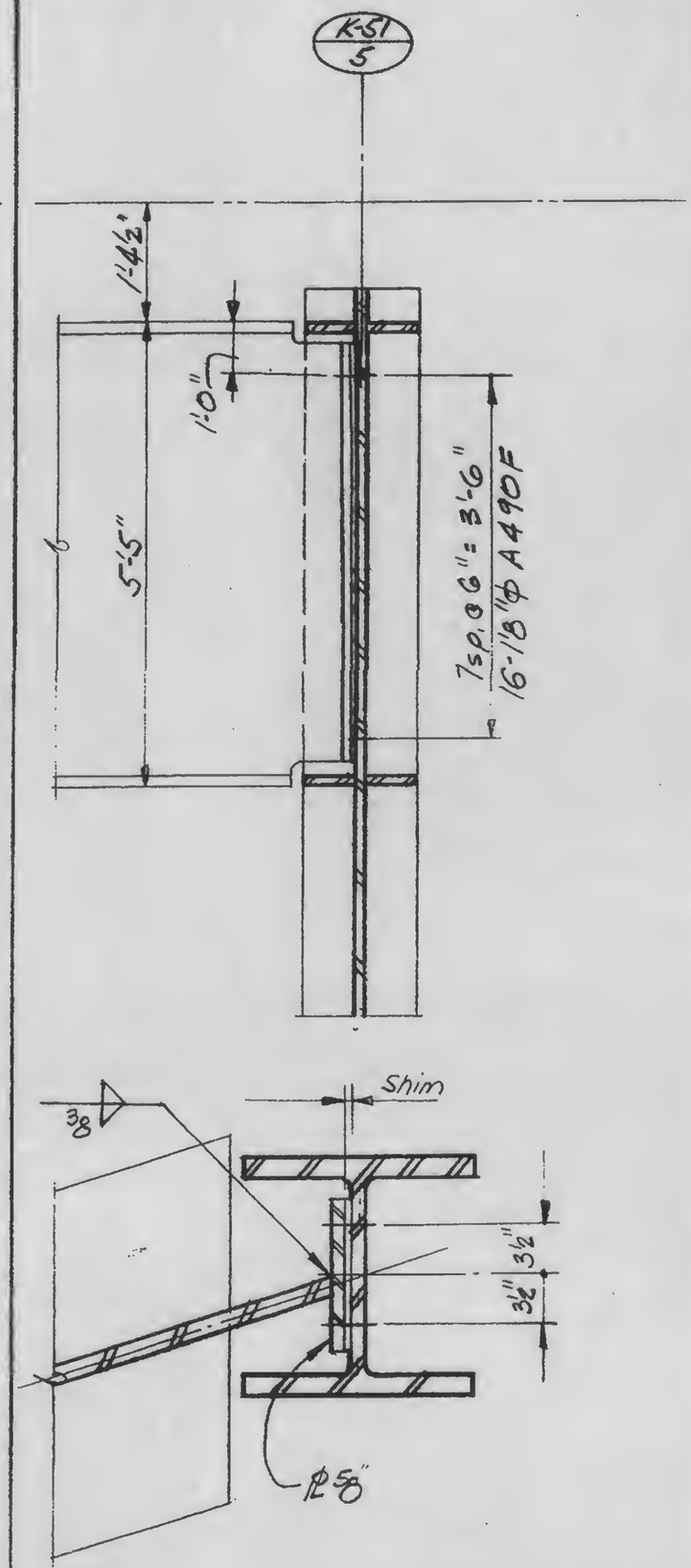

B

13-K3.3-15

LICENSED PROFESSIONAL ENGINEER — LESLIE E. ROBERTSON — No. 34360 — UNIVERSITY OF THE STATE OF NEW YORK

DESIGNED

DRAWN

REVIEWED

SKILLING, HELLE, CHRISTIANSEN, ROBERTSON — Structural & Civil Engineers

PROJECT: THE WORLD TRADE CENTER

TITLE: GIRDER CONNECTION DETAILS

DATE: 11-3-72

REVISIONS

Released for construction 11-20-72

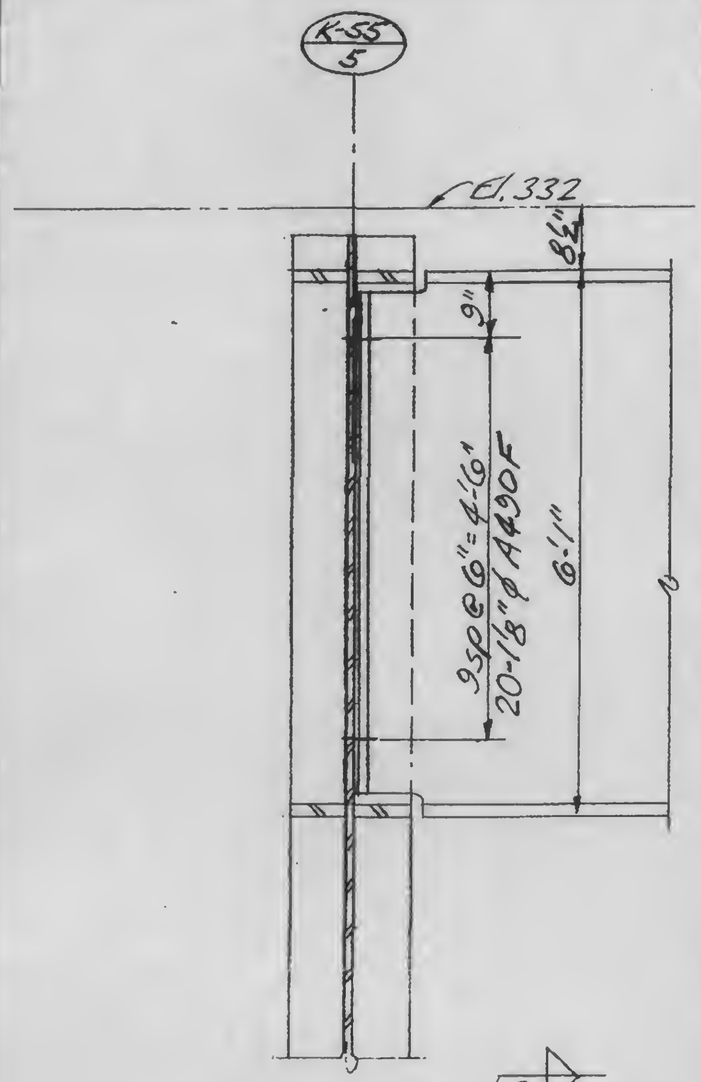

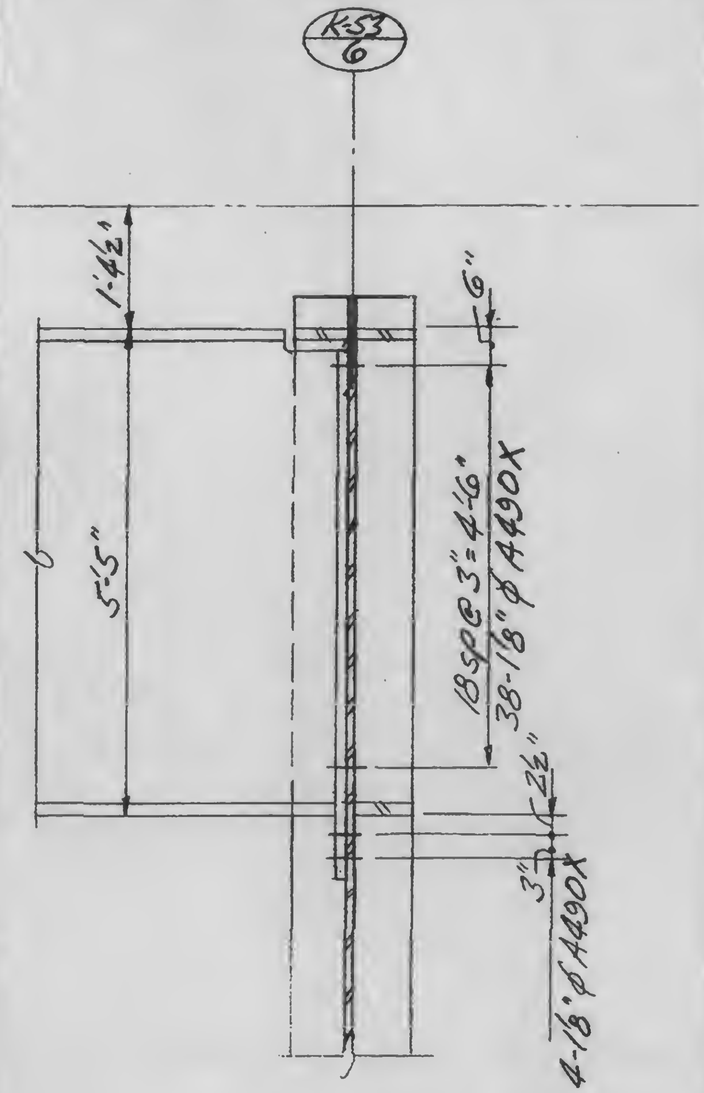

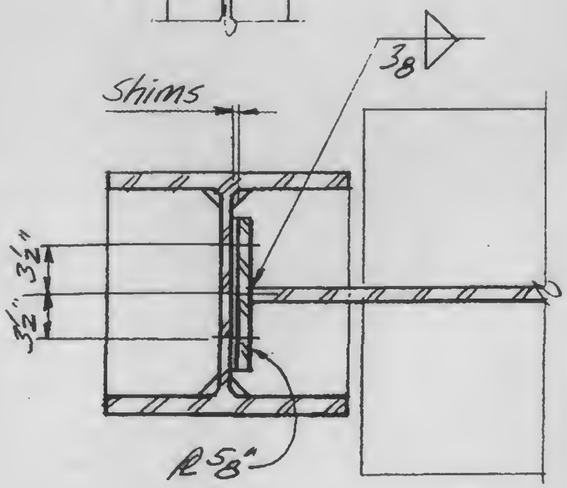

A

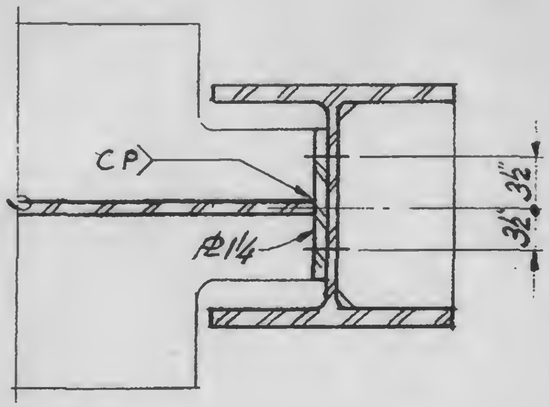

B

LICENSED PROFESSIONAL ENGINEER — LESLIE E. ROBERTSON — No. 34360 — UNIVERSITY OF THE STATE OF NEW YORK

DESIGNED

DRAWN

REVIEWED

13-K3.3-16

SKILLING, HELLE, CHRISTIANSEN, ROBERTSON — Structural & Civil Engineers

PROJECT: THE WORLD TRADE CENTER

TITLE: GIRDER CONNECTION DETAILS

DATE: 11-3-72

REVISIONS

Released for construction 11-20-72

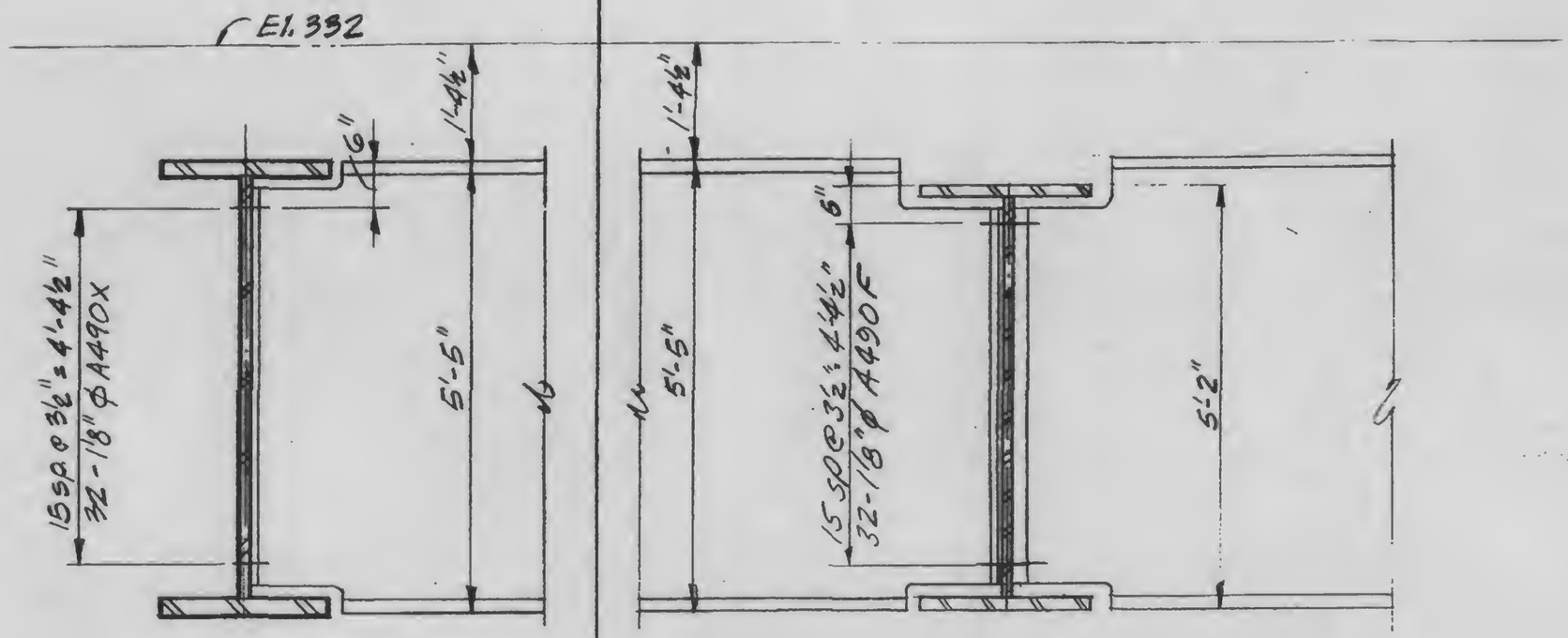

For cont. See 3.4-12A

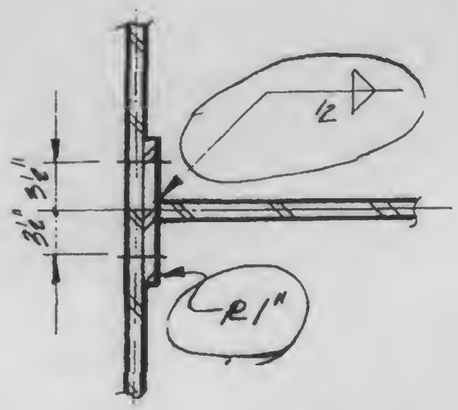

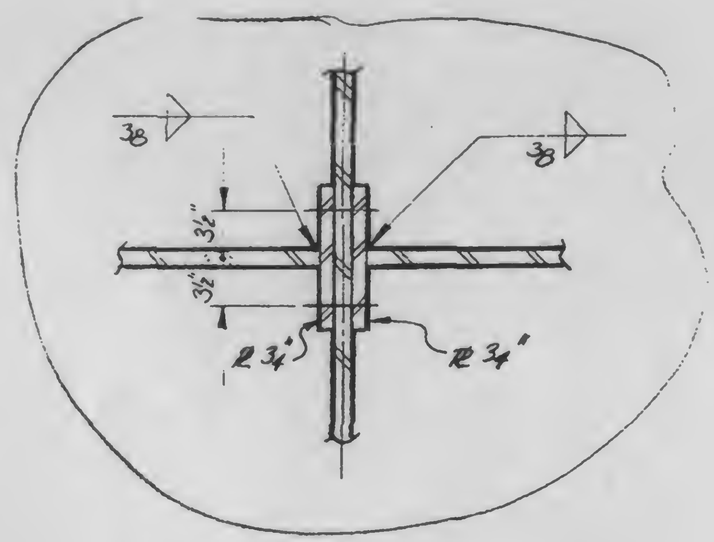

LICENSED PROFESSIONAL ENGINEER — LESLIE E. ROBERTSON — No. 34340 — UNIVERSITY OF THE STATE OF NEW YORK

DESIGNED

DRAWN

REVIEWED

A | B

13-K3.3-17

SKILLING, HELLE, CHRISTIANSEN, ROBERTSON — Structural & Civil Engineers

PROJECT: THE WORLD TRADE CENTER

TITLE: GIRDER DETAILS AT FUTURE COLUMNS

DATE: 11-3-72

REVISIONS

General Rev. RELEASED FOR CONSTRUCTION 11-24-72

2-5-73

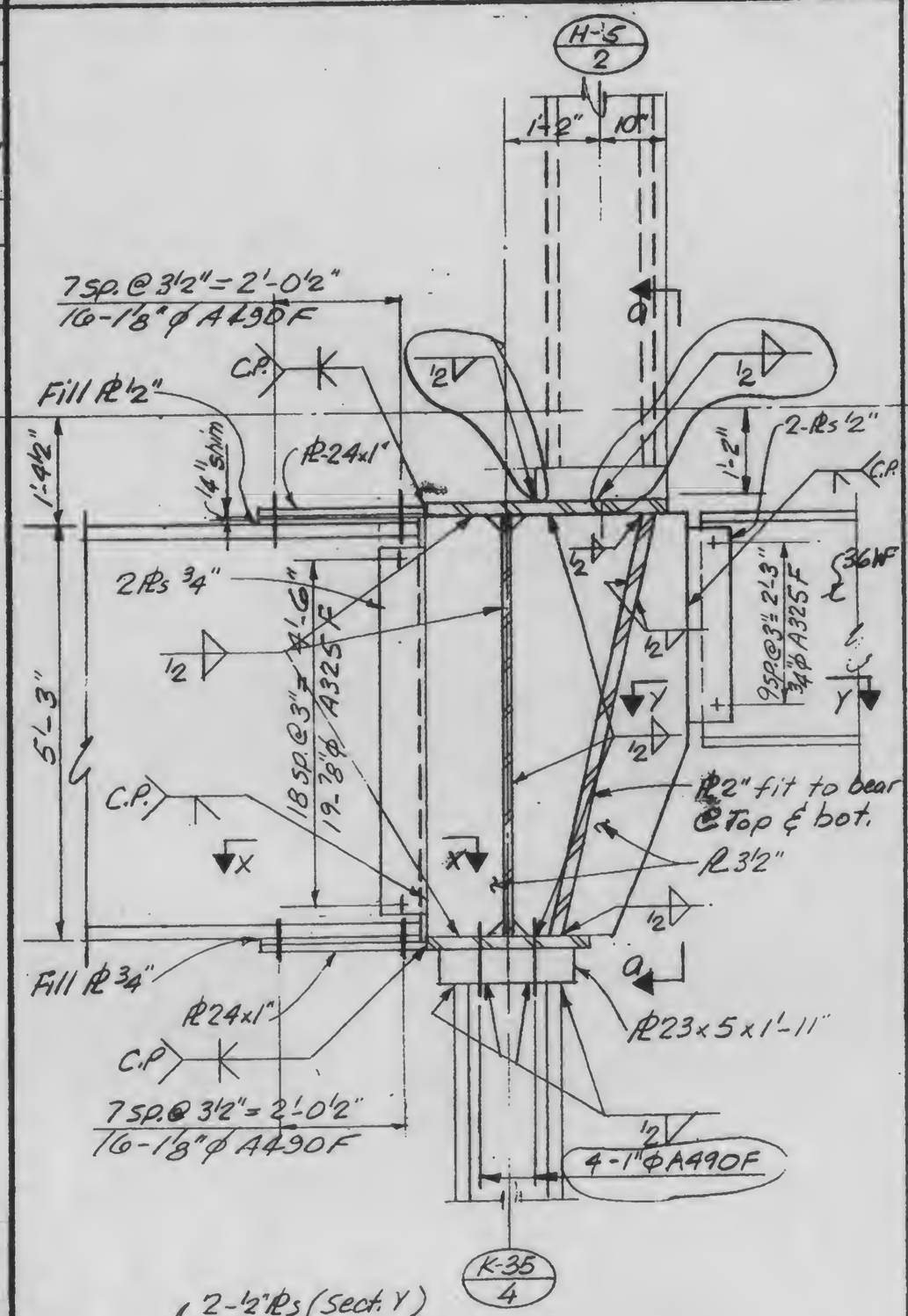

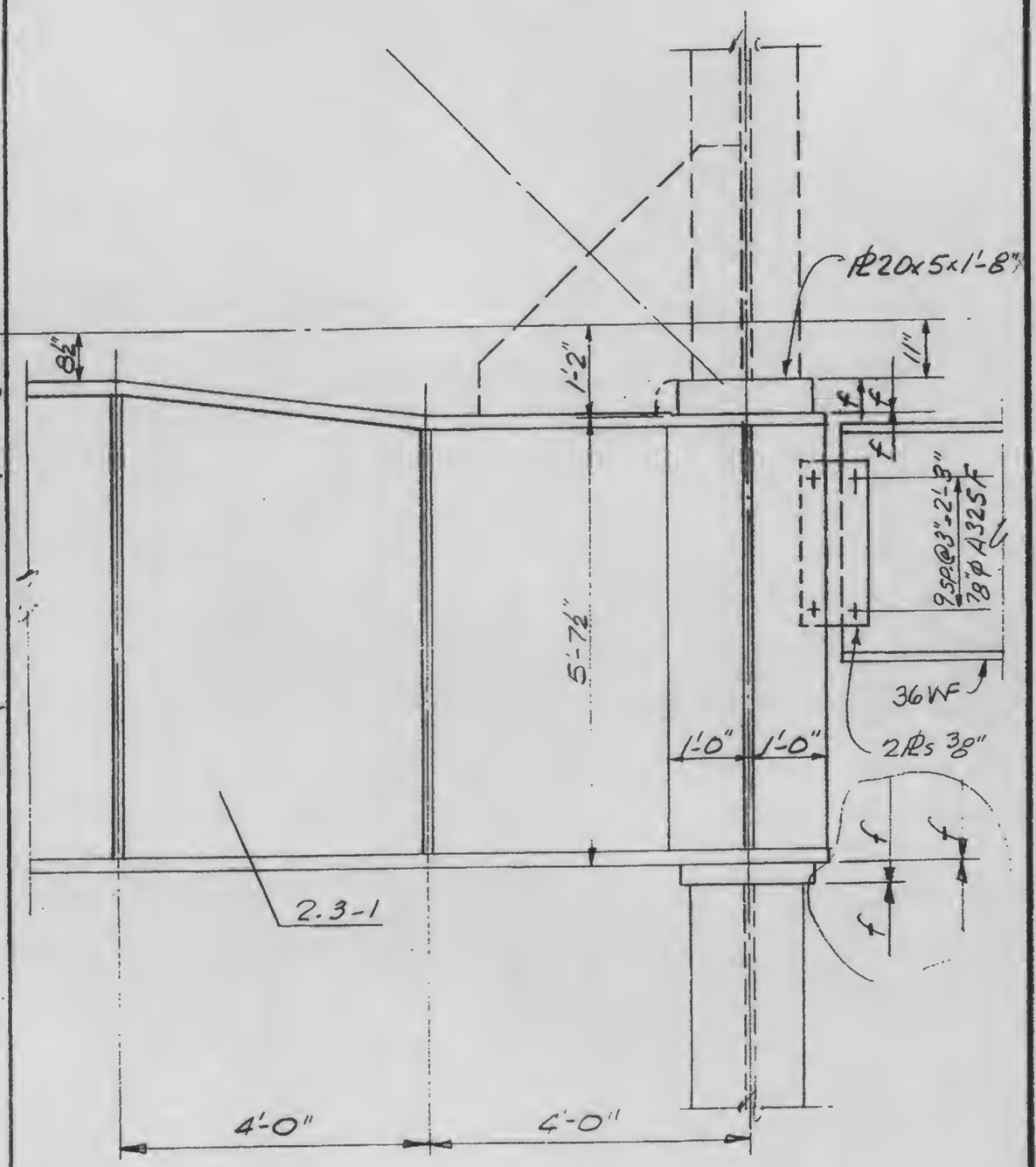

LICENSED PROFESSIONAL ENGINEER — LESLIE E. ROBERTSON — No 34360 — UNIVERSITY OF THE STATE OF NEW YORK

DESIGNED

DRAWN

REVIEWED

a

.3-K3.4-1

SKILLING, HELLE, CHRISTIANSEN, ROBERTSON — Structural & Civil Engineers

PROJECT: THE WORLD TRADE CENTER

TITLE: GIRDER DETAILS AT FUTURE COLUMNS

DATE: 11-3-72

REVISIONS

- General Revision Released for construction 11-24-72
- 2-5-73

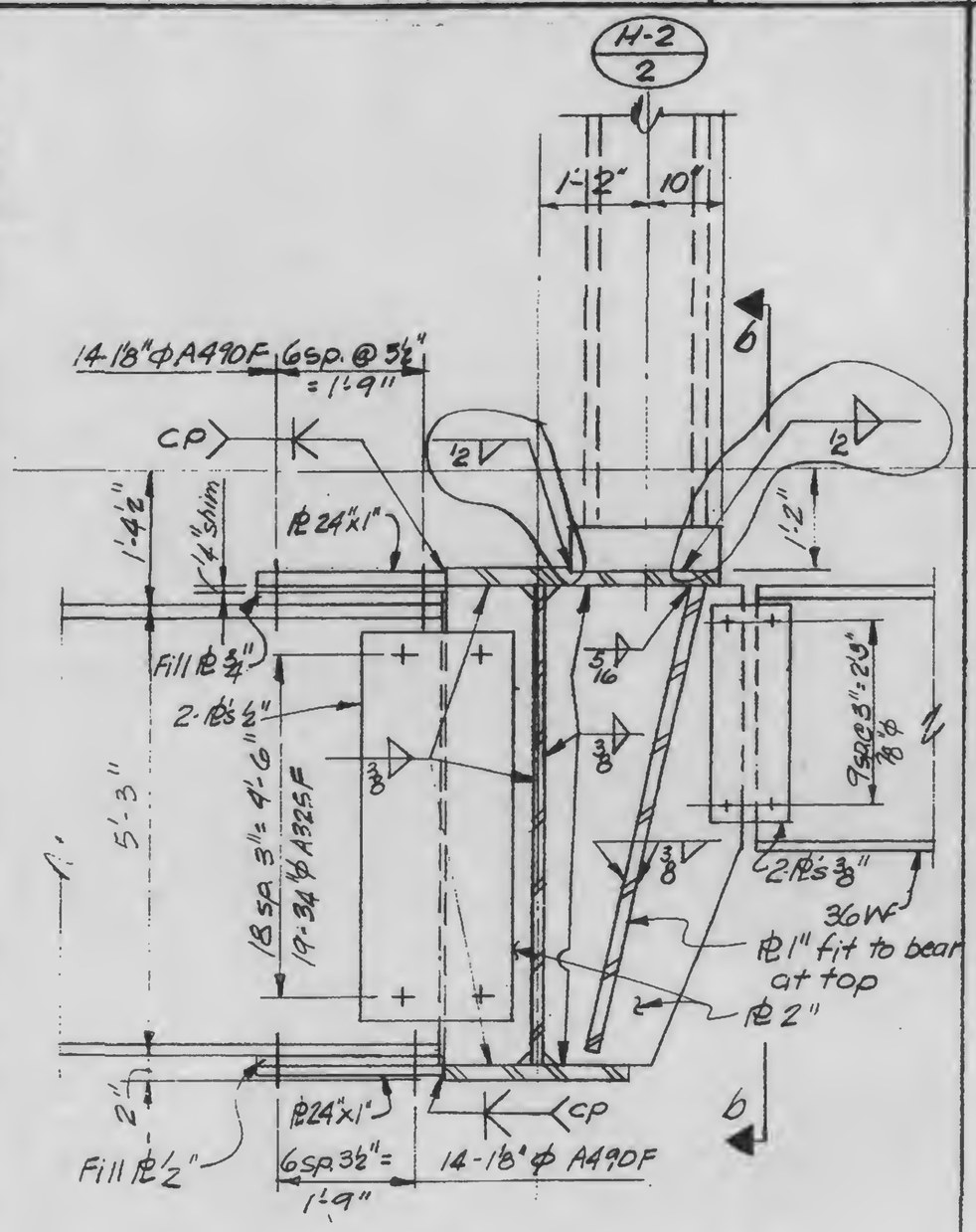

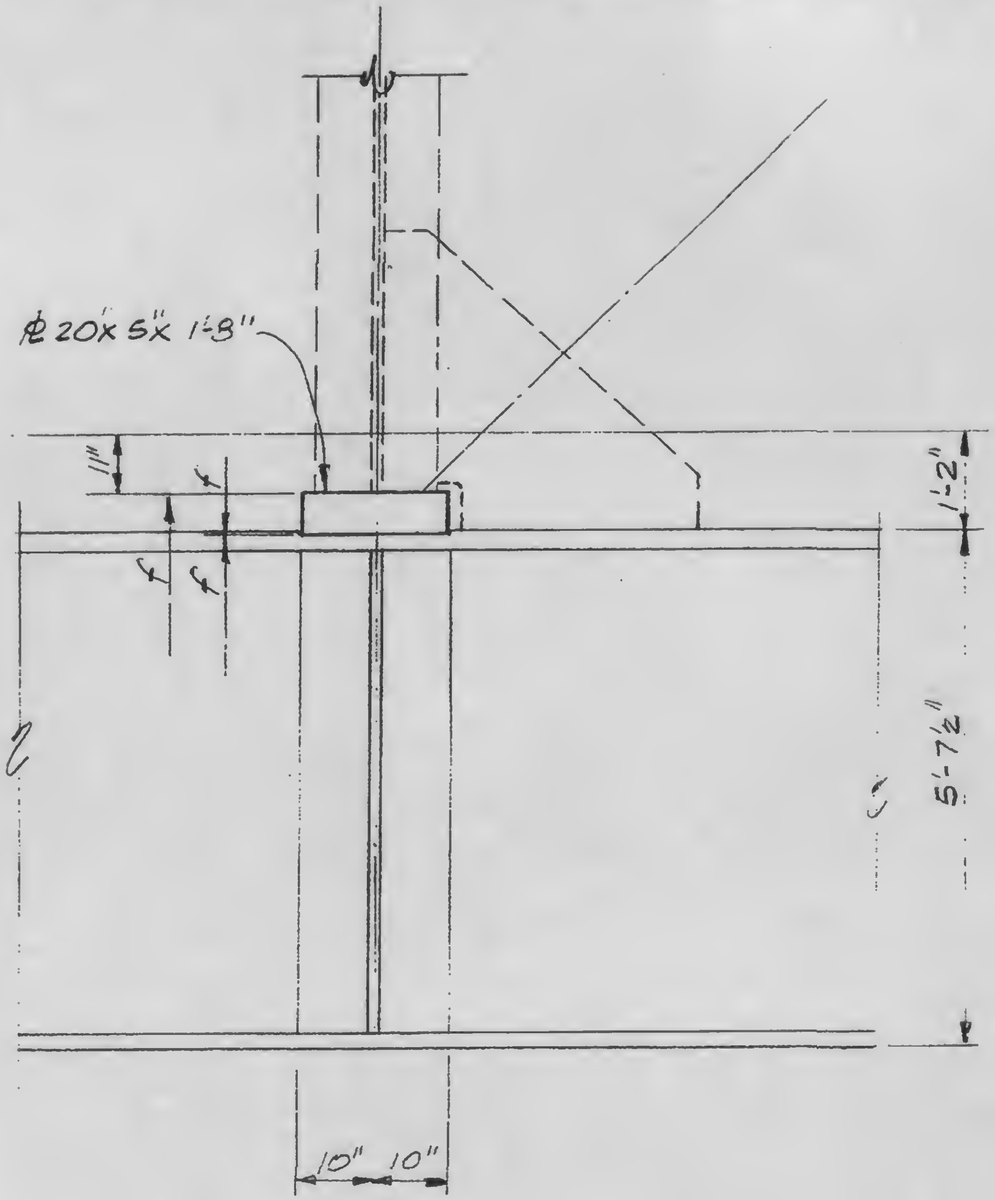

LICENSED PROFESSIONAL ENGINEER — LESLIE E. ROBERTSON — No. 34360 — UNIVERSITY OF THE STATE OF NEW YORK

DESIGNED

DRAWN

REVIEWED

b

13-K 3.4-2

SKILLING, HELLE, CHRISTIANSEN, ROBERTSON — Structural & Civil Engineers

PROJECT: THE WORLD TRADE CENTER

TITLE: GIRDER DETAILS AT FUTURE COLUMNS

DATE: 11-3-72

REVISIONS

GENERAL REVISION RELEASED FOR CONSTRUCTION 11-24-72

12-11-72

2-5-73

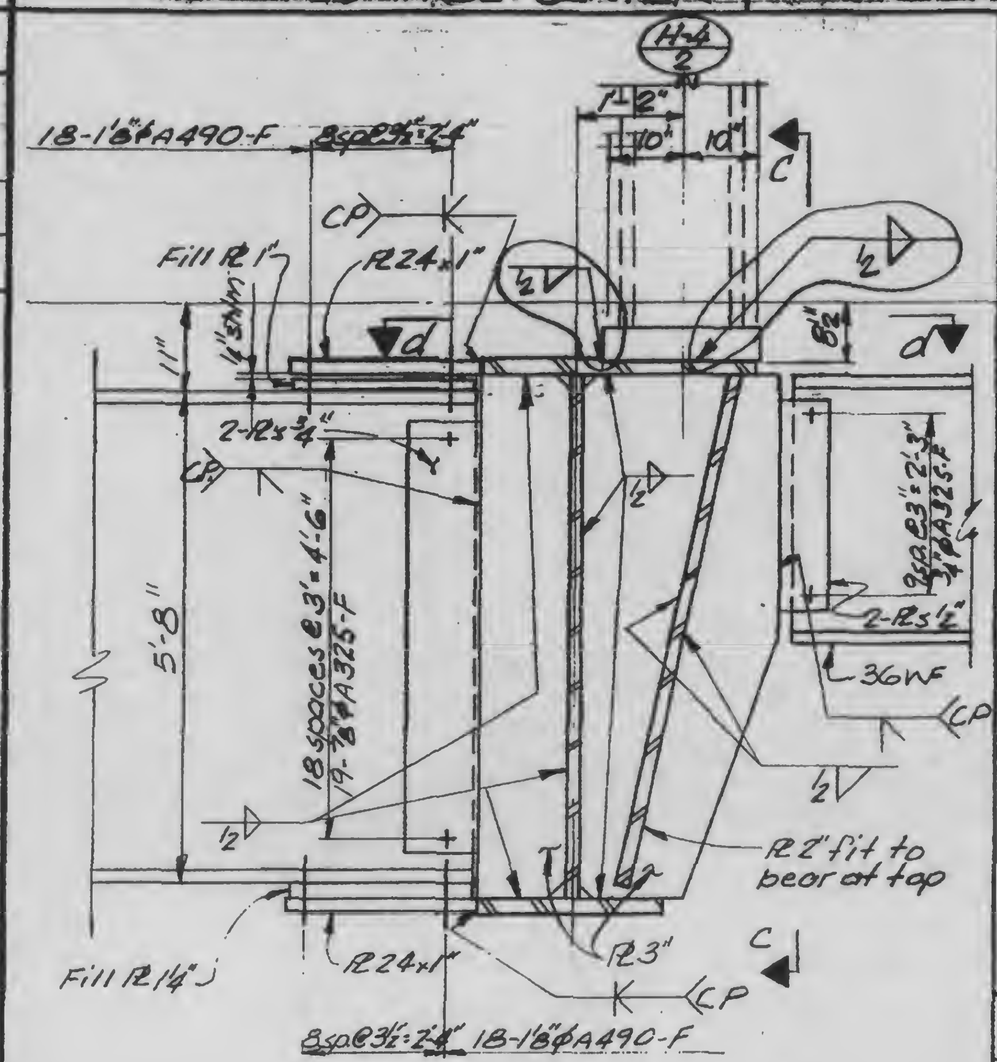

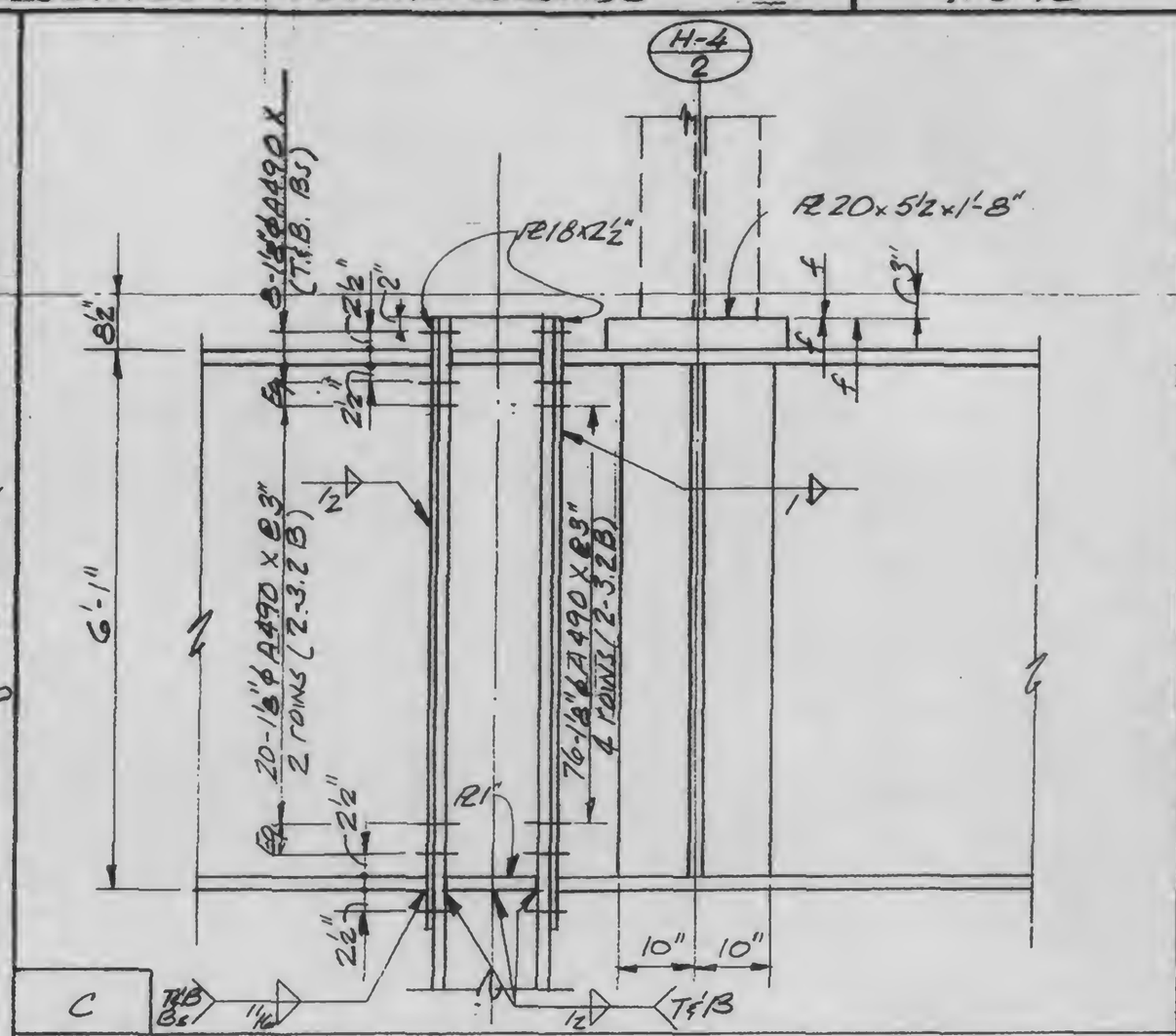

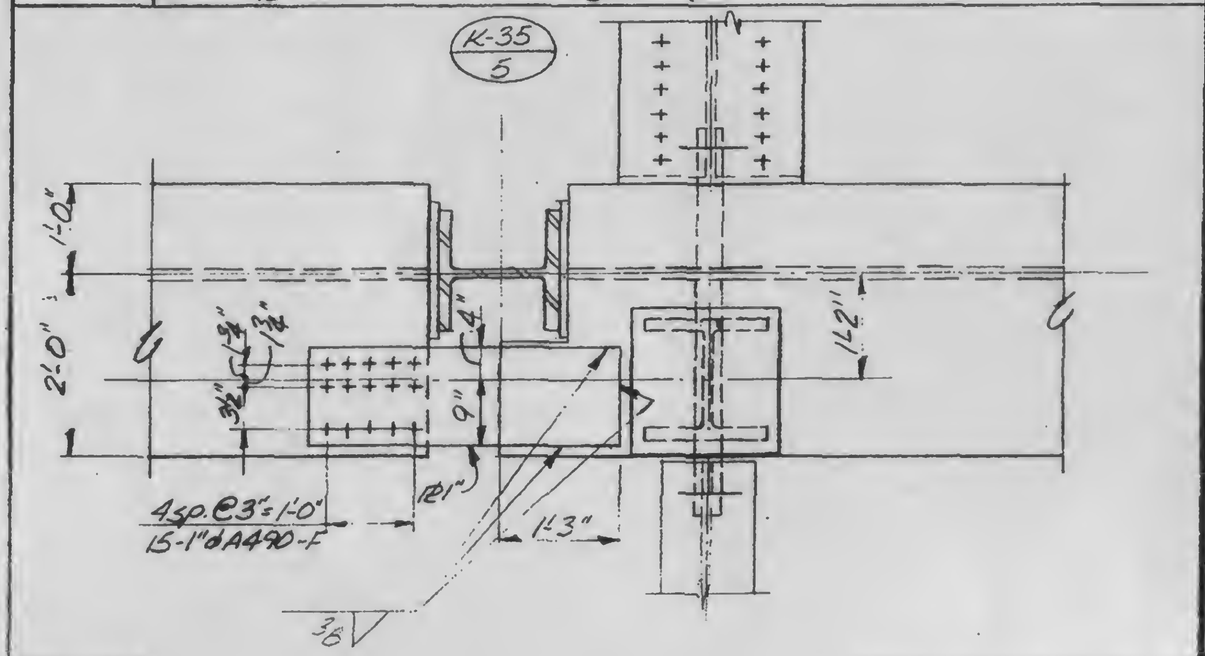

LICENSED PROFESSIONAL ENGINEER — LESLIE E. ROBERTSON — No. 34360 — UNIVERSITY OF THE STATE OF NEW YORK

DESIGNED

DRAWN

REVIEWED

13-K3.4-3

SKILLING, HELLE, CHRISTIANSEN, ROBERTSON — Structural & Civil Engineers

PROJECT: THE WORLD TRADE CENTER

TITLE: GIRDER DETAILS AT FUTURE COLUMNS

DATE: 11-3-72

REVISIONS

General Revision Released for Construction 11-24-72

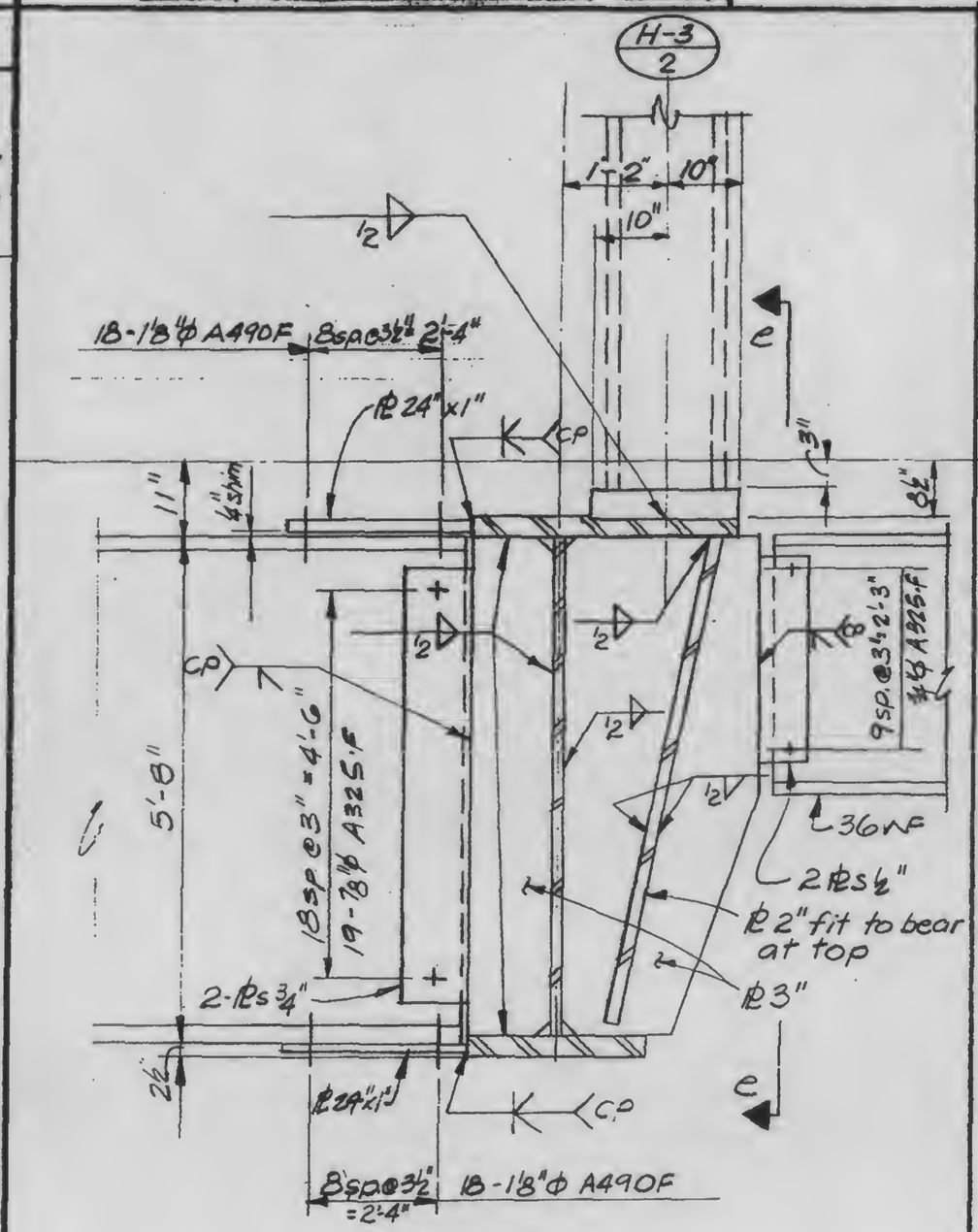

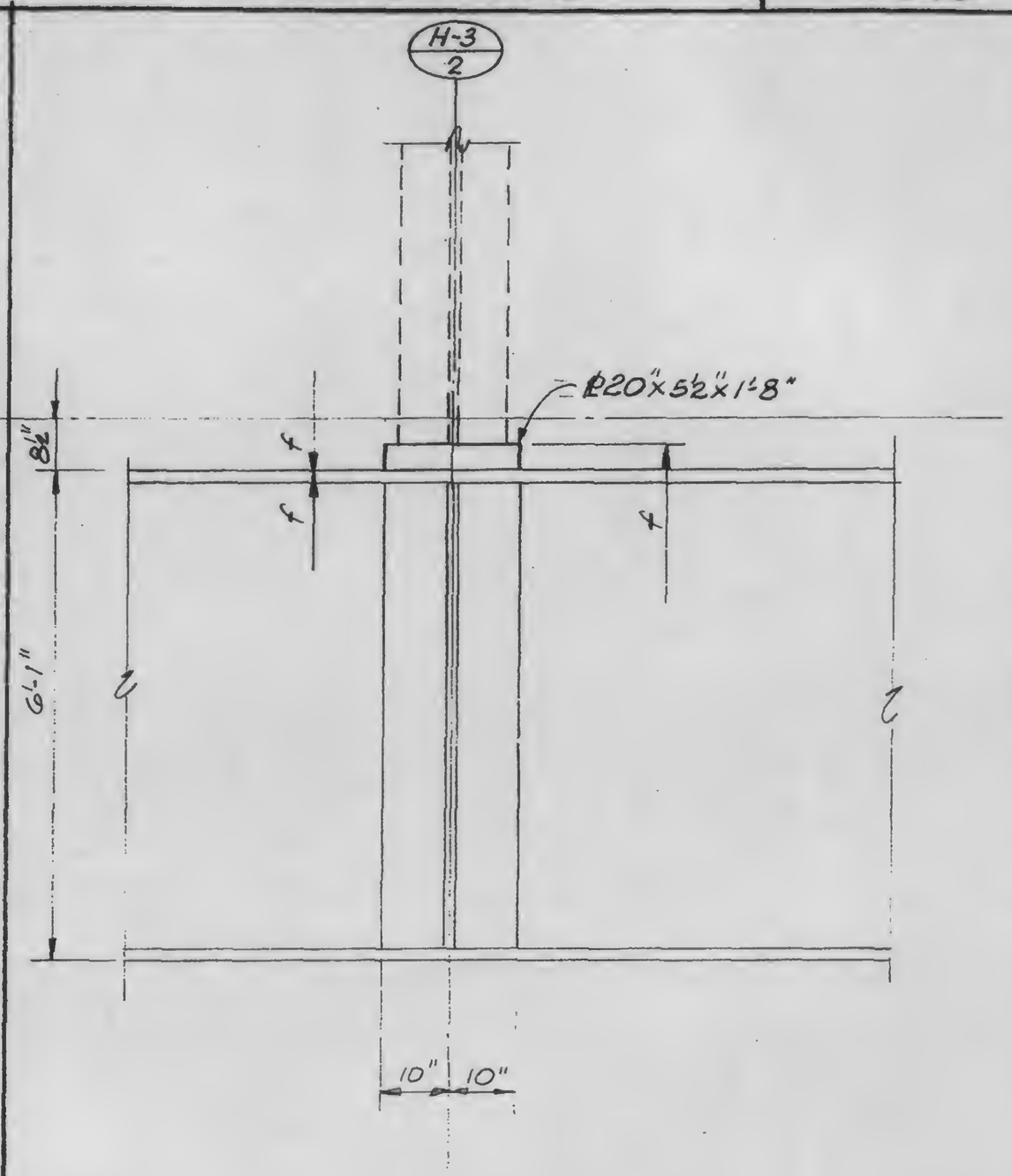

LICENSED PROFESSIONAL ENGINEER — LESLIE E. ROBERTSON — No. 34360 — UNIVERSITY OF THE STATE OF NEW YORK

DESIGNED

DRAWN

REVIEWED

e

3-K 3.4-4

SKILLING, HELLE, CHRISTIANSEN, ROBERTSON — Structural & Civil Engineers

PROJECT: THE WORLD TRADE CENTER

TITLE: GIRDER DETAILS AT FUTURE COLUMNS

DATE: 11-[illegible]-72

REVISIONS

RELEASED FOR CONSTRUCTION 11-24-72

12-11-72

2-5-73

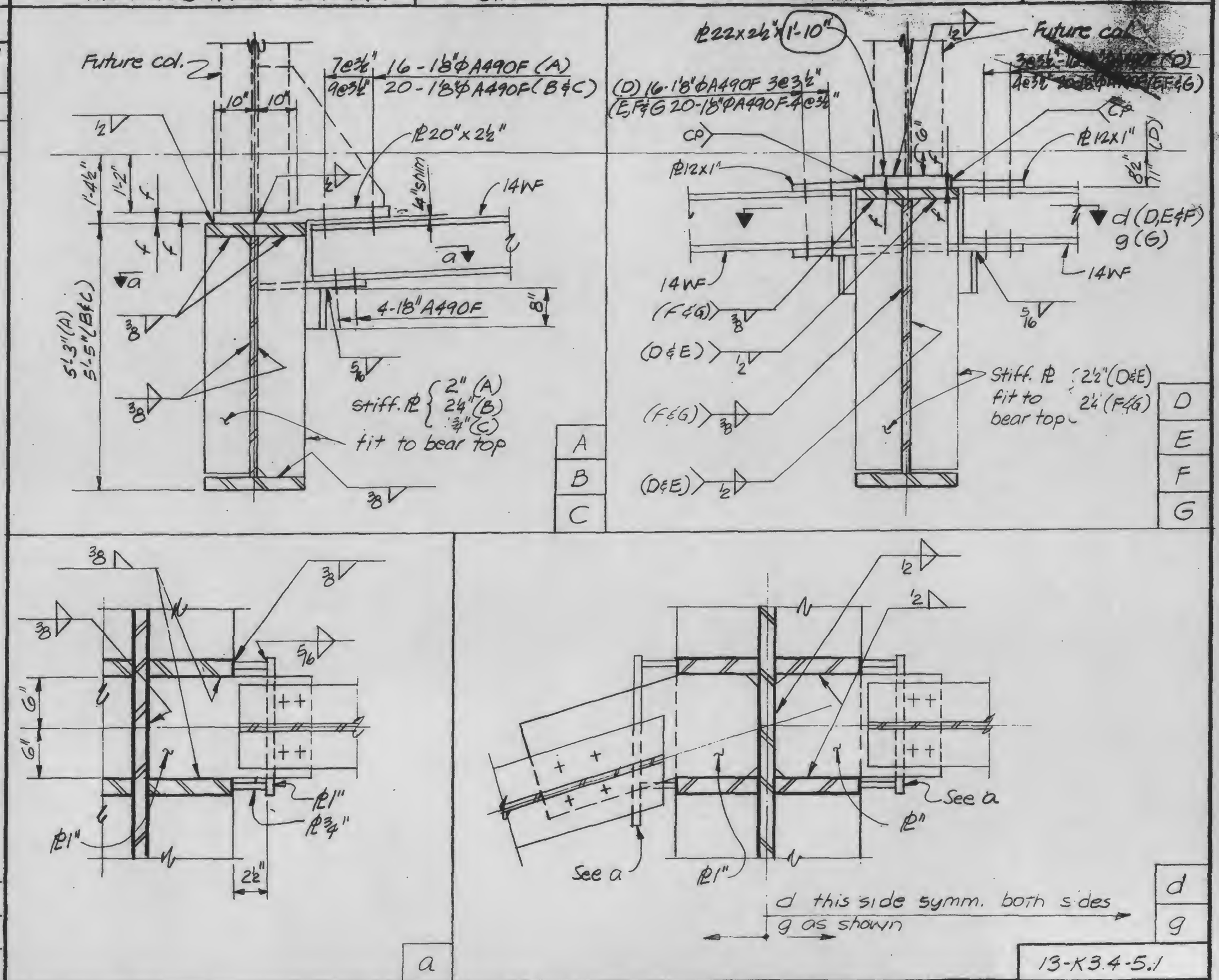

LICENSED PROFESSIONAL ENGINEER — LESLIE E. ROBERTSON — No. 34360 — UNIVERSITY OF THE STATE OF NEW YORK

DESIGNED

DRAWN

REVIEWED

13-K3.4-5.1

SKILLING, HELLE, CHRISTIANSEN, ROBERTSON — Structural & Civil Engineers

PROJECT: THE WORLD TRADE CENTER

TITLE: GIRDER DETAILS AT FUTURE COLUMNS

DATE: 11-24-72

REVISIONS

RELEASED FOR CONSTRUCTION 11-24-72

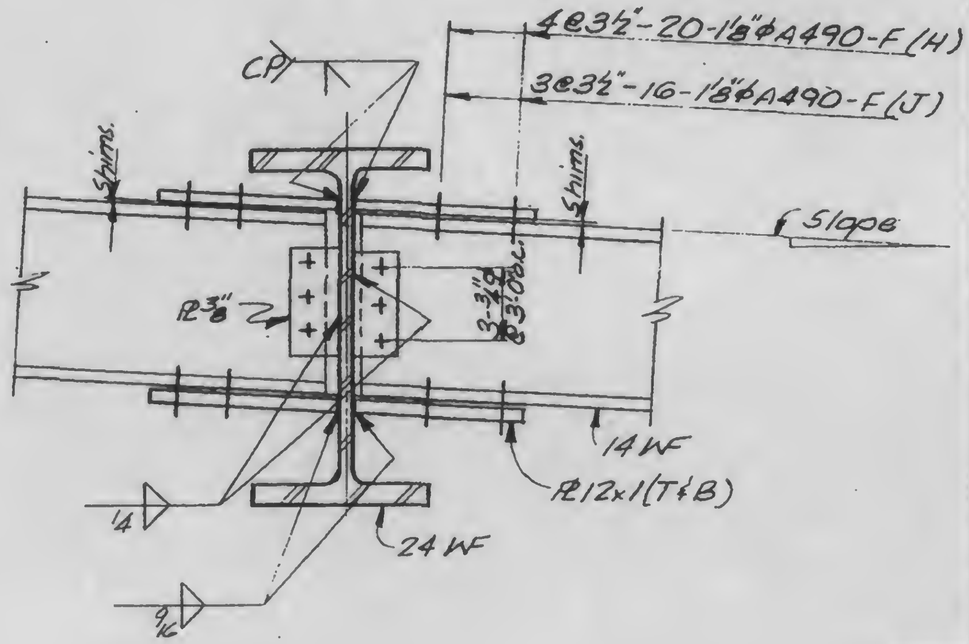

LICENSED PROFESSIONAL ENGINEER — LESLIE E. ROBERTSON — No. 34360 — UNIVERSITY OF THE STATE OF NEW YORK

DESIGNED

DRAWN T.R

REVIEWED

13-K3.4-5.2.

SKILLING, HELLE, CHRISTIANSEN, ROBERTSON — Structural & Civil Engineers

PROJECT: THE WORLD TRADE CENTER

TITLE: GIRDER DETAILS AT FUTURE COLS.

DATE: 11-3-72

REVISIONS

RELEASED FOR CONSTRUCTION 11-24-72

2-5-73

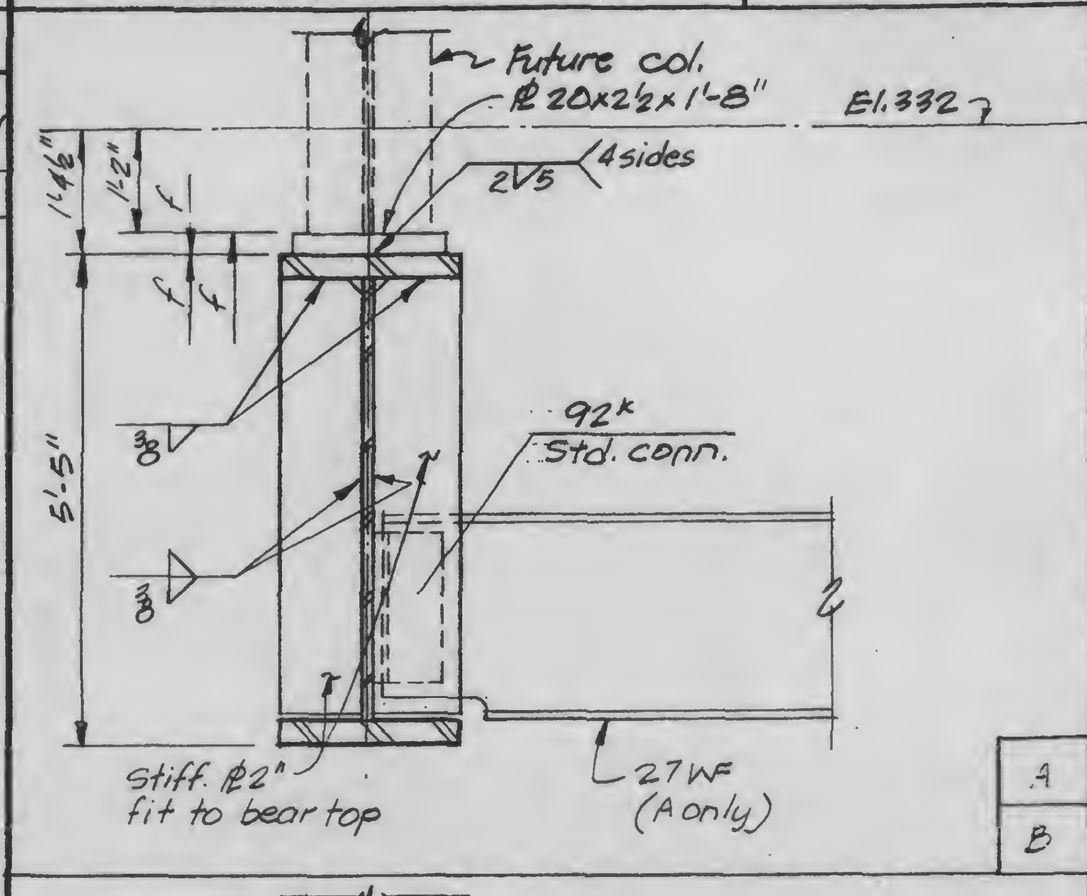

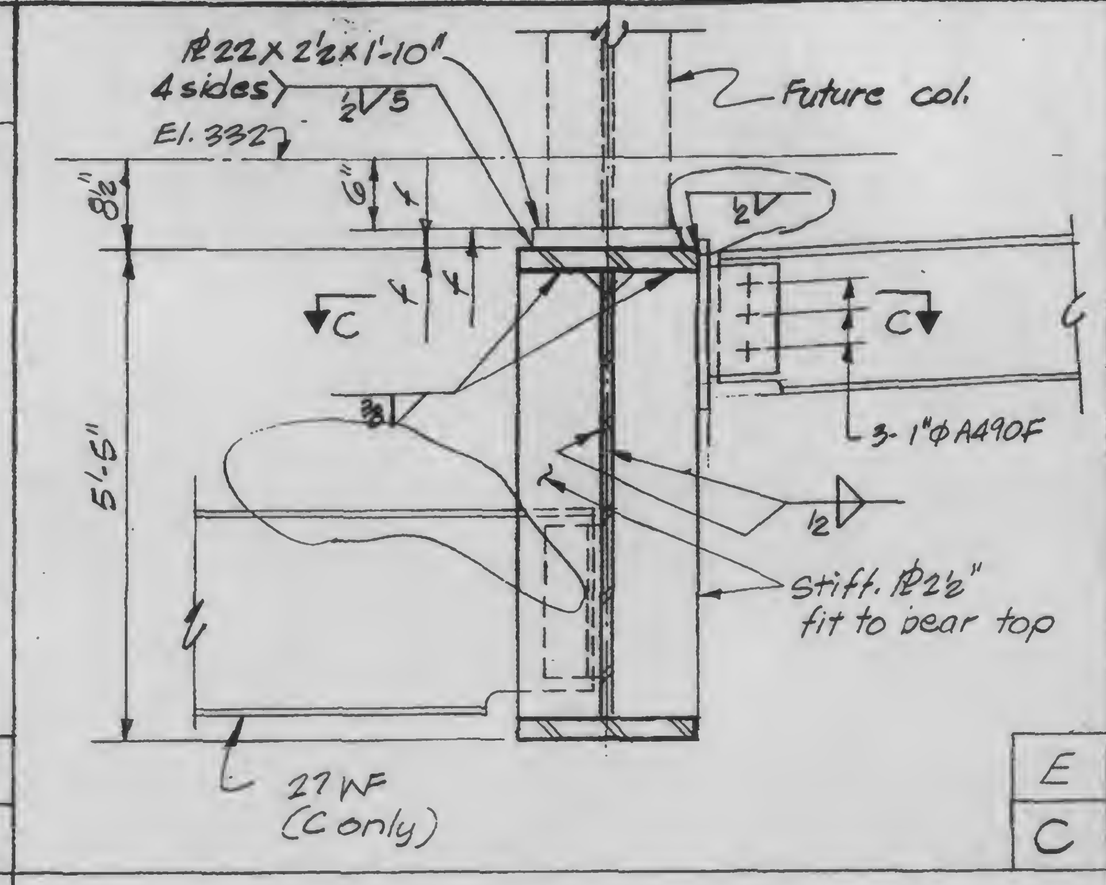

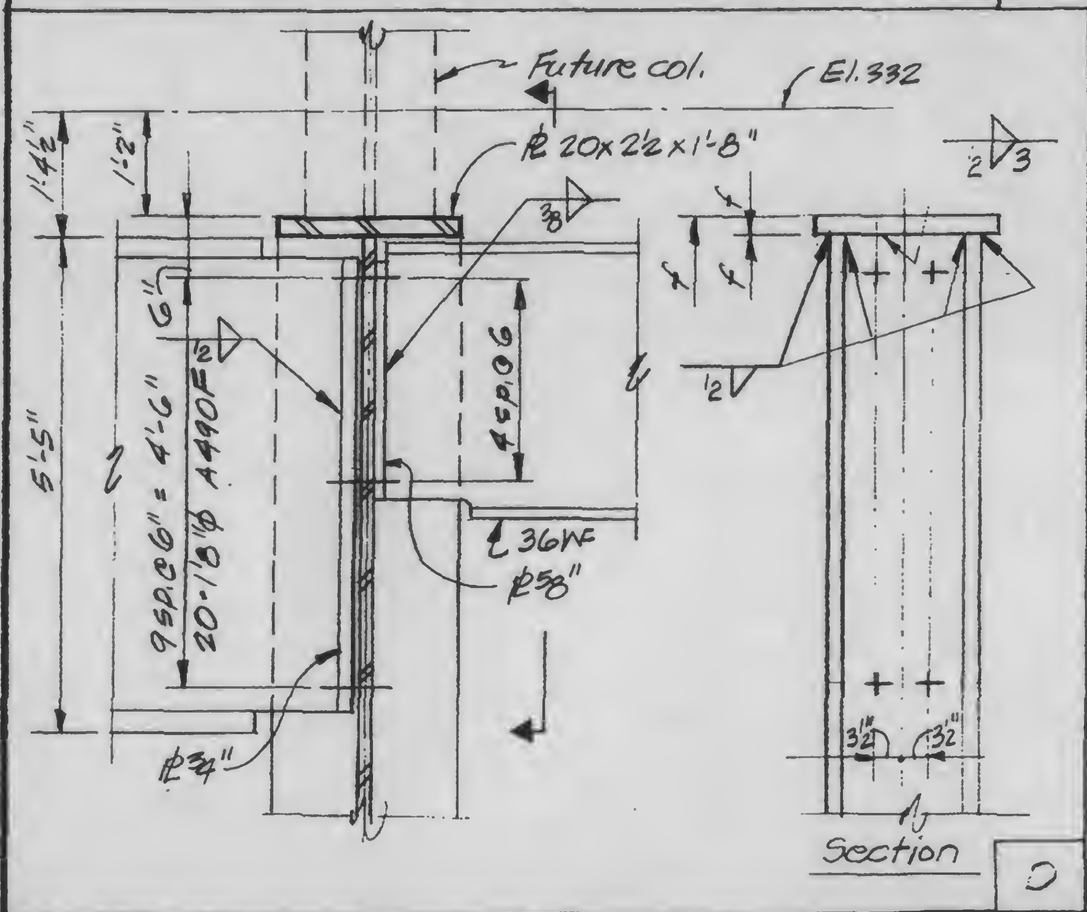

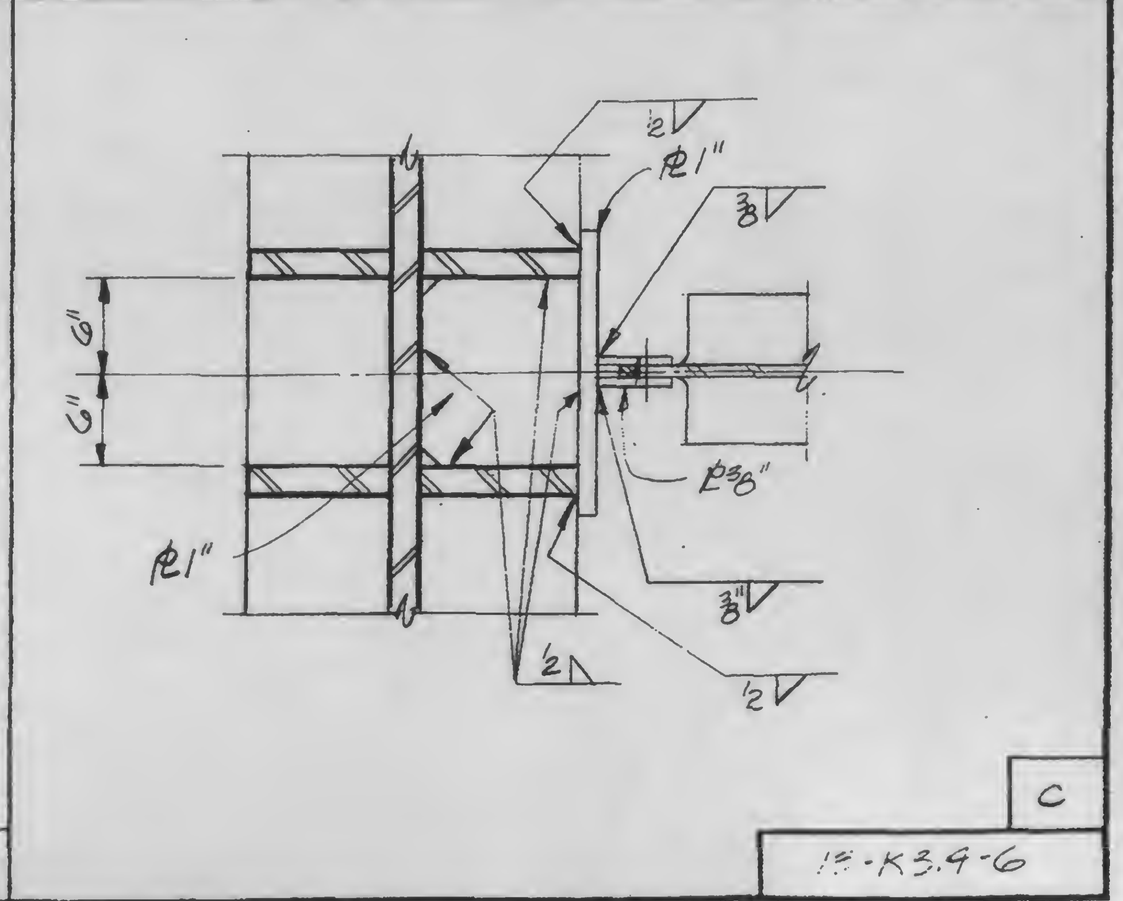

LICENSED PROFESSIONAL ENGINEER — LESLIE E. ROBERTSON — No. 34360 — UNIVERSITY OF THE STATE OF NEW YORK

DESIGNED

DRAWN

REVIEWED

1F-K3.9-6

SKILLING, HELLE, CHRISTIANSEN, ROBERTSON — Structural & Civil Engineers

PROJECT: THE WORLD TRADE CENTER | TITLE: GIRDER DETAILS AT FUTURE COLS. | DATE: 11-3-72

REVISIONS

RELEASED FOR CONSTRUCTION 11-24-72

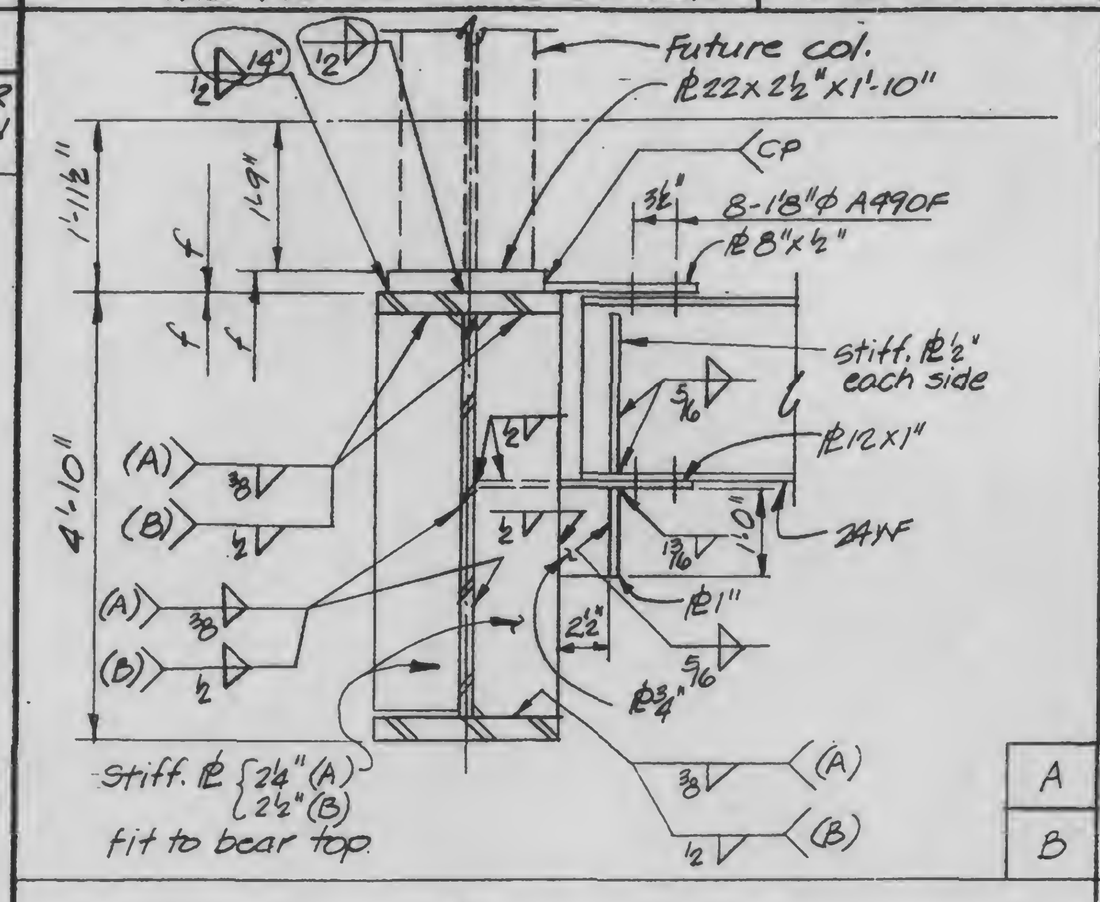

A

B

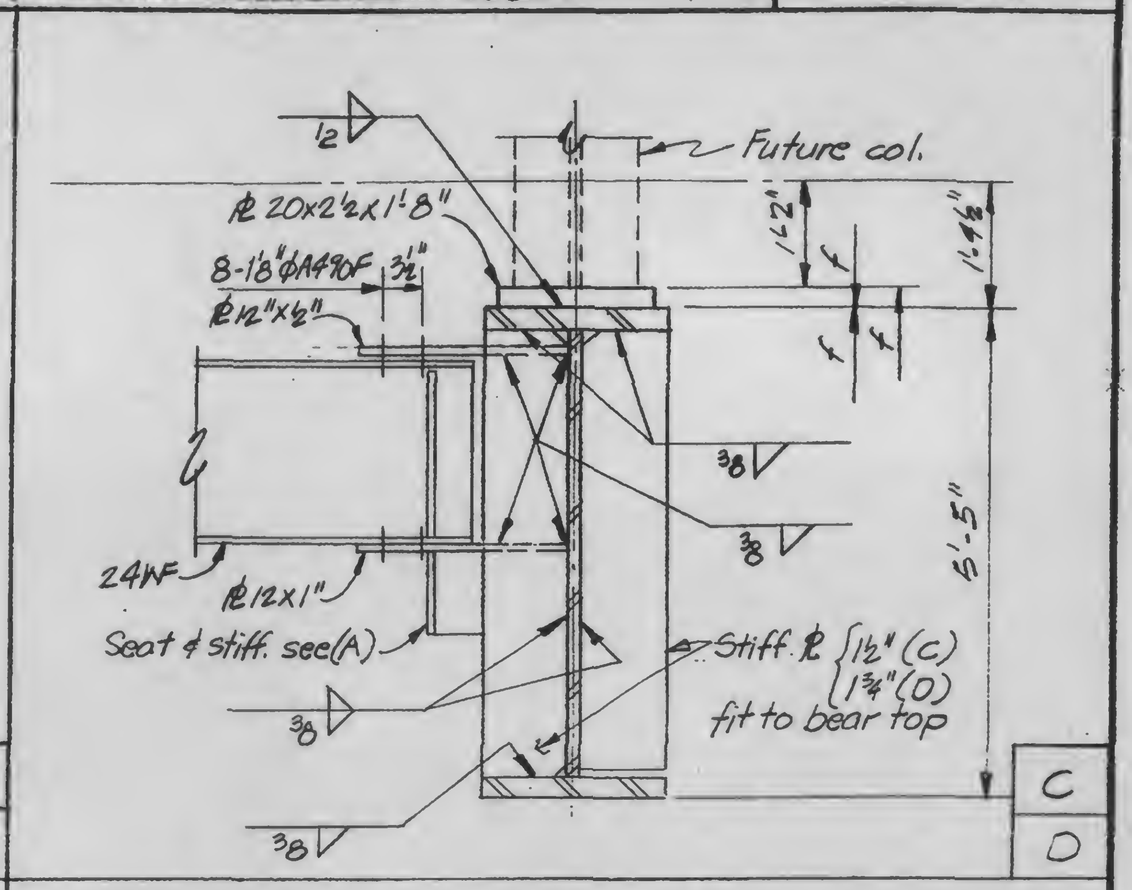

C

D

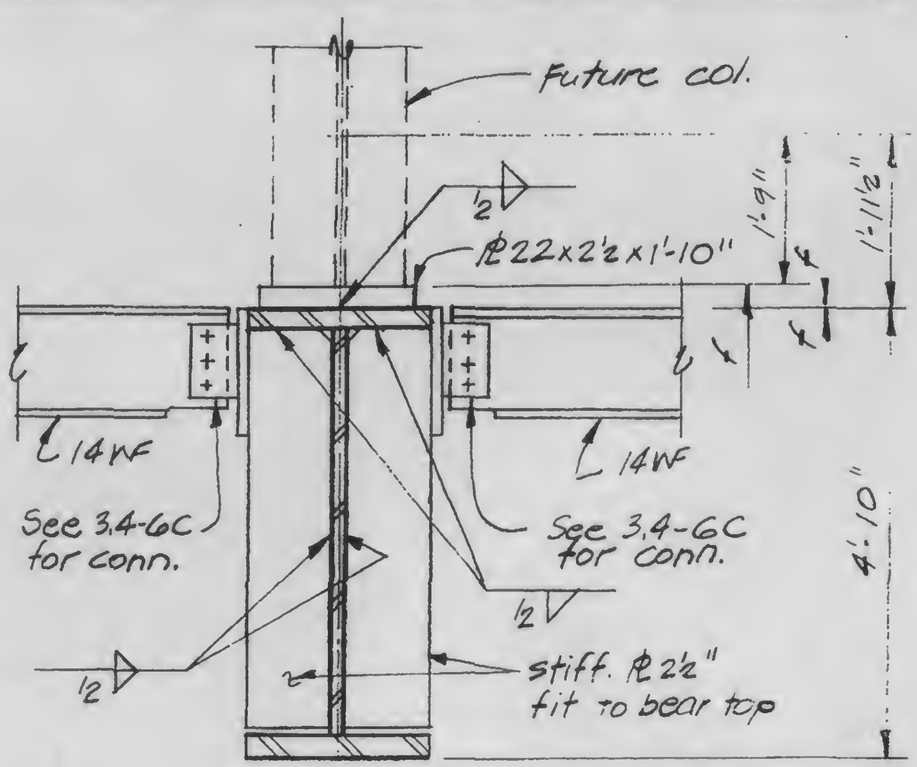

E

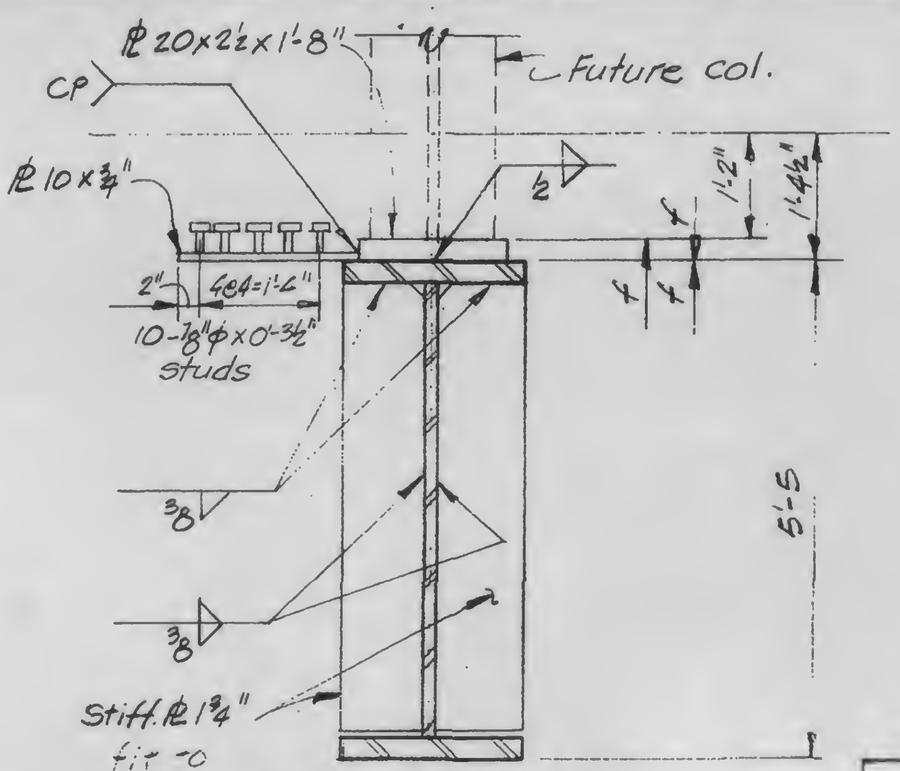

F

LICENSED PROFESSIONAL ENGINEER — LESLIE E. ROBERTSON — No. 34360 — UNIVERSITY OF THE STATE OF NEW YORK

DESIGNED

DRAWN

REVIEWED

13-K 3.4-7

SKILLING, HELLE, CHRISTIANSEN, ROBERTSON — Structural & Civil Engineers

PROJECT: THE WORLD TRADE CENTER

TITLE: GIRDER DETAILS AT FUTURE COLS.

DATE: 11-3-72

REVISIONS

RELEASED FOR CONSTRUCTION 11-24-72

6-20-73 R

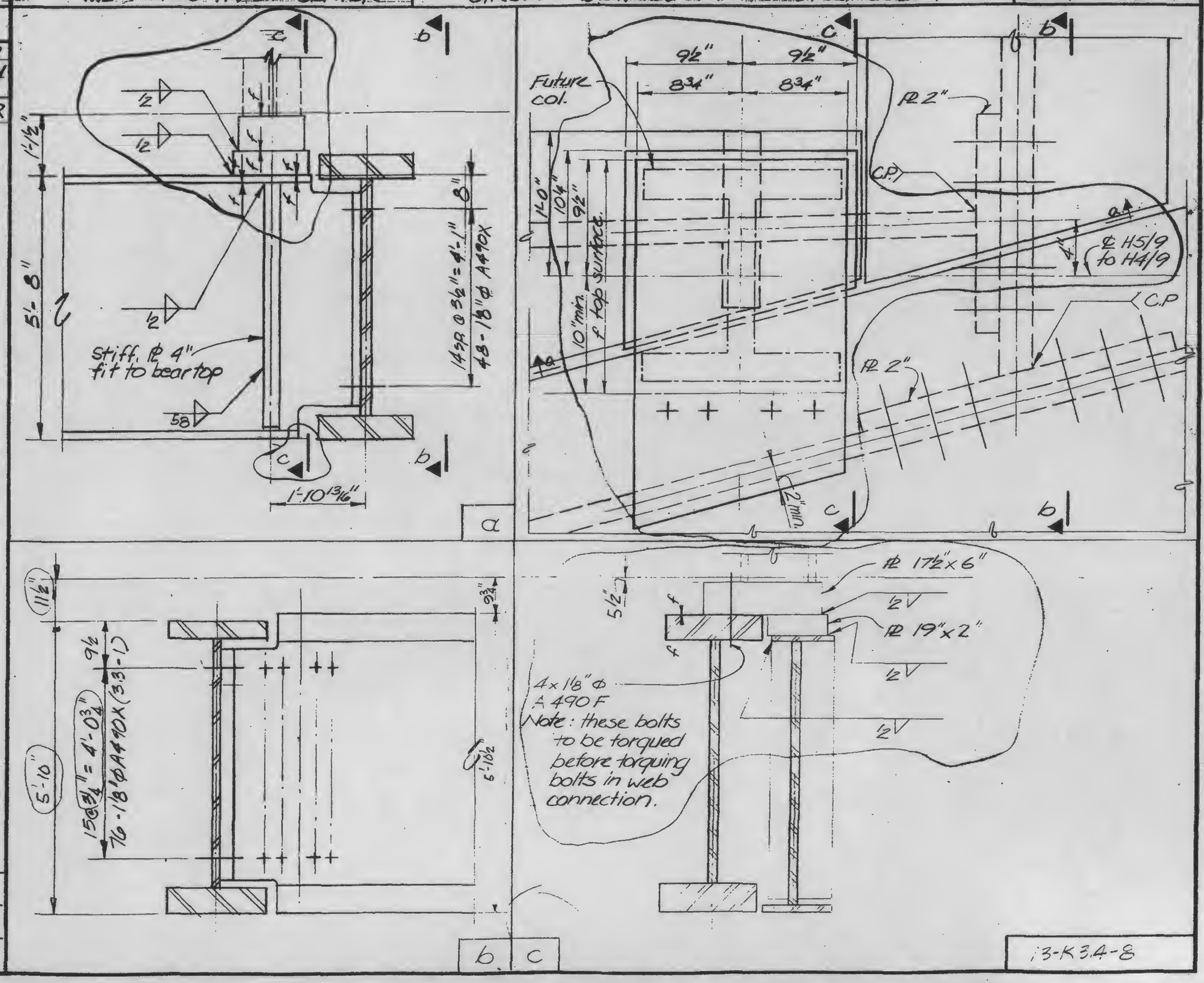

LICENSED PROFESSIONAL ENGINEER — LESLIE E. ROBERTSON — No. 34360 — UNIVERSITY OF THE STATE OF NEW YORK

DESIGNED: K.C.

DRAWN: P.M.O

REVIEWED: W.A.B.

13-K 3.4-8

SKILLING, HELLE, CHRISTIANSEN, ROBERTSON — Structural & Civil Engineers

PROJECT: THE WORLD TRADE CENTER

TITLE: GIRDER DETAILS AT FUTURE COLS.

DATE: 11-3-72

REVISIONS

RELEASED FOR CONSTRUCTION 11-24-72

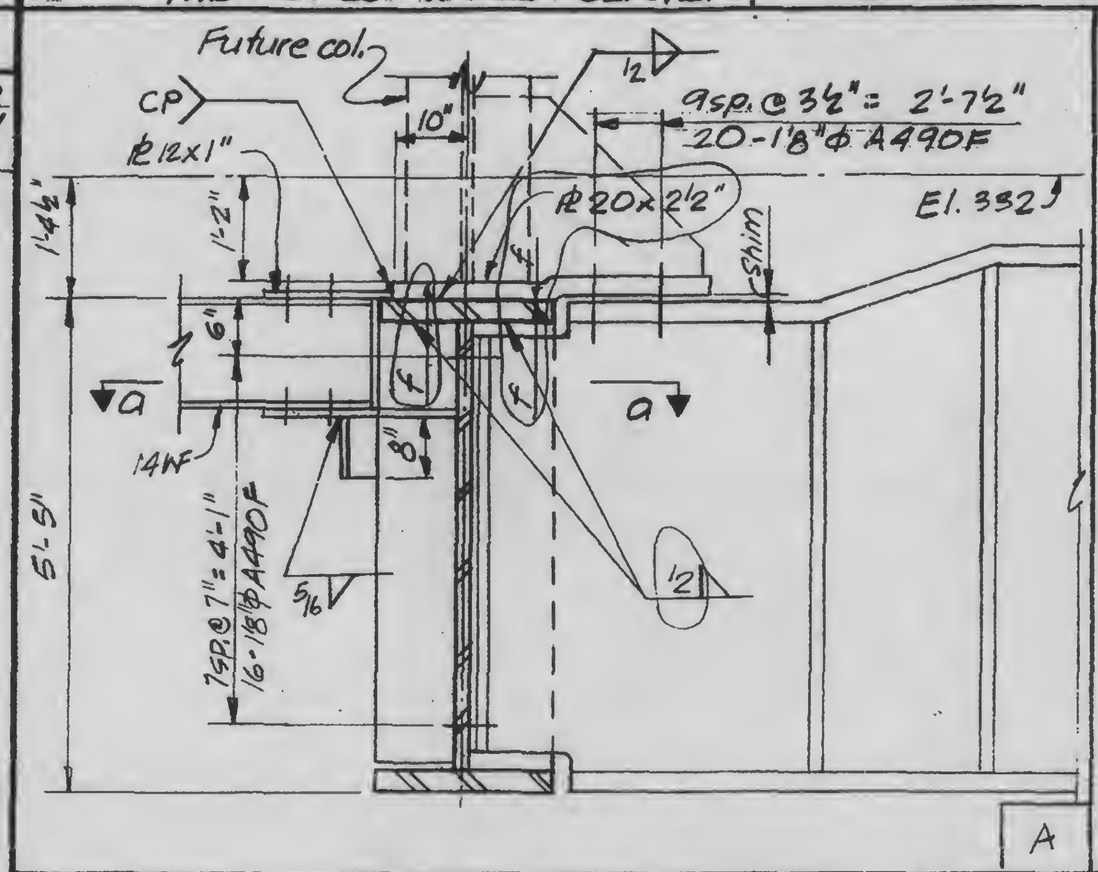

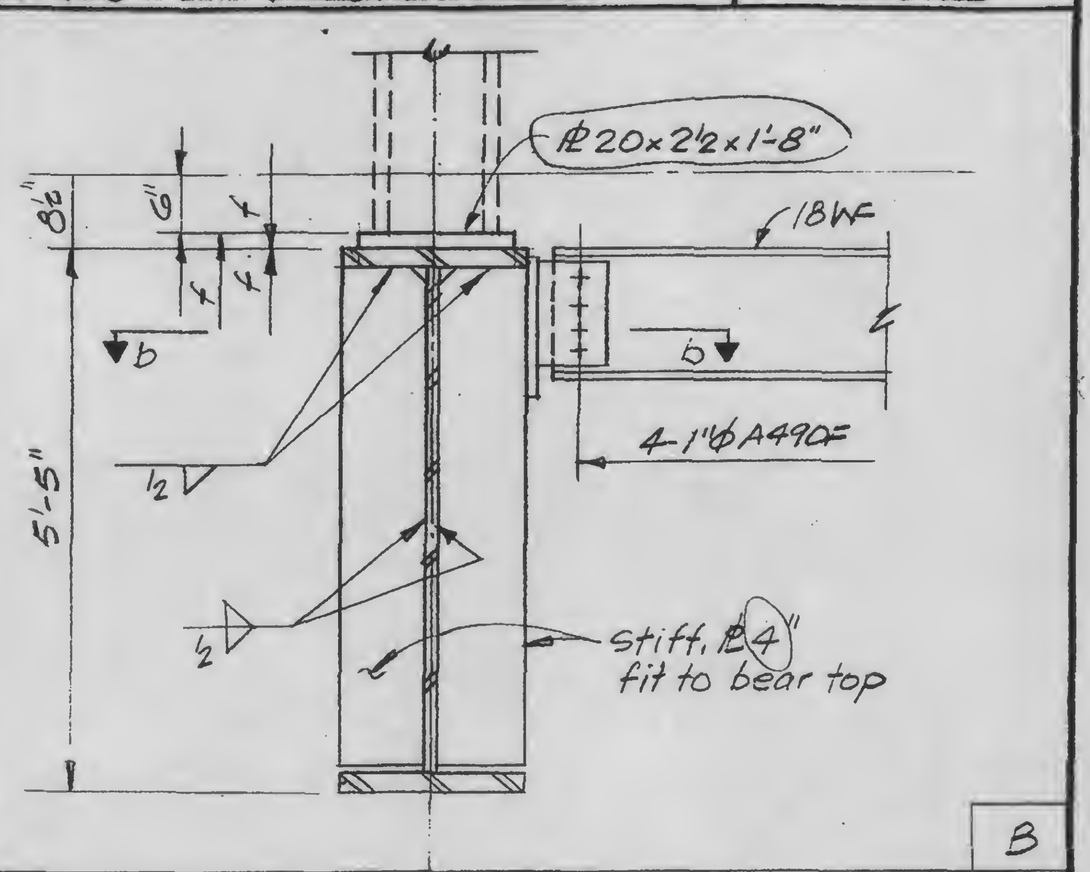

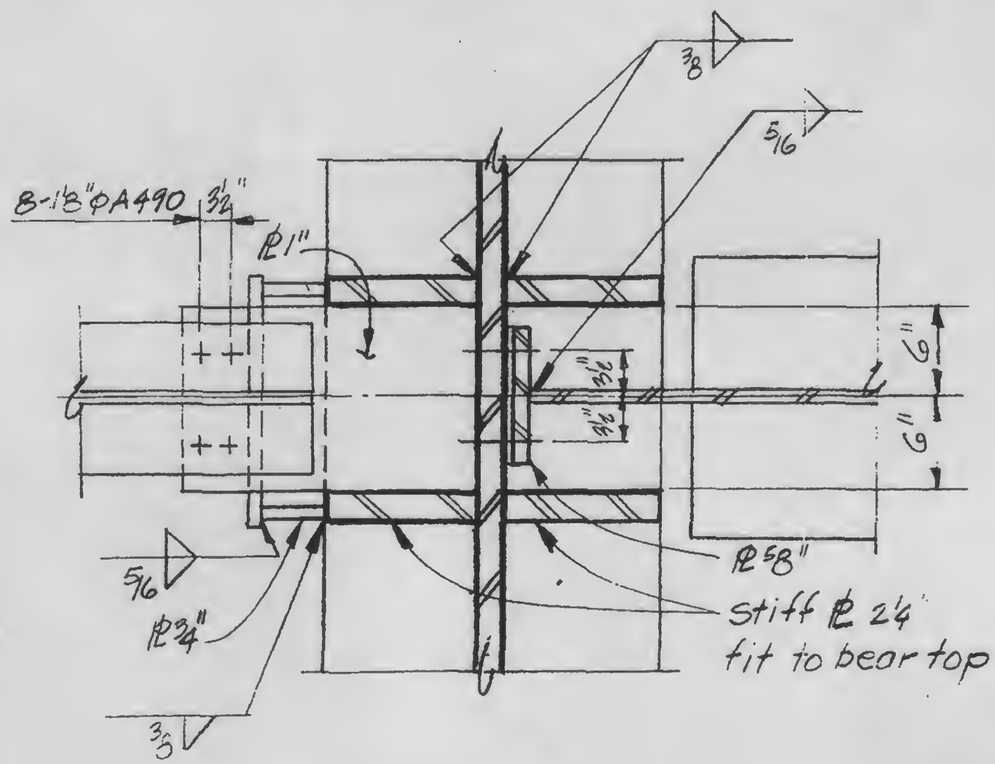

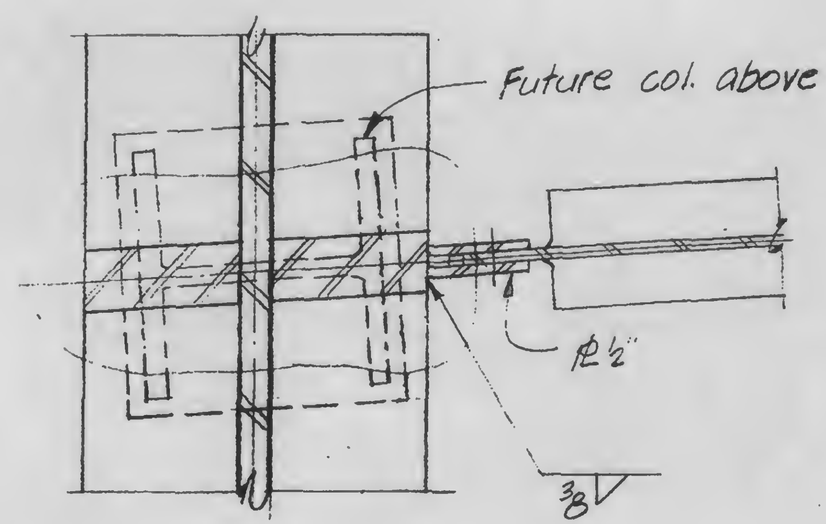

13-K3.4-9

LICENSED PROFESSIONAL ENGINEER — LESLIE E. ROBERTSON — No. 34360 — UNIVERSITY OF THE STATE OF NEW YORK

DESIGNED

DRAWN

REVIEWED

SKILLING, HELLE, CHRISTIANSEN, ROBERTSON — Structural & Civil Engineers

PROJECT: THE WORLD TRADE CENTER | TITLE: GIRDER DETAILS AT FUTURE COLUMNS | DATE: 11-3-72

REVISIONS

RELEASED FOR CONSTRUCTION 11-24-72

6-4-73

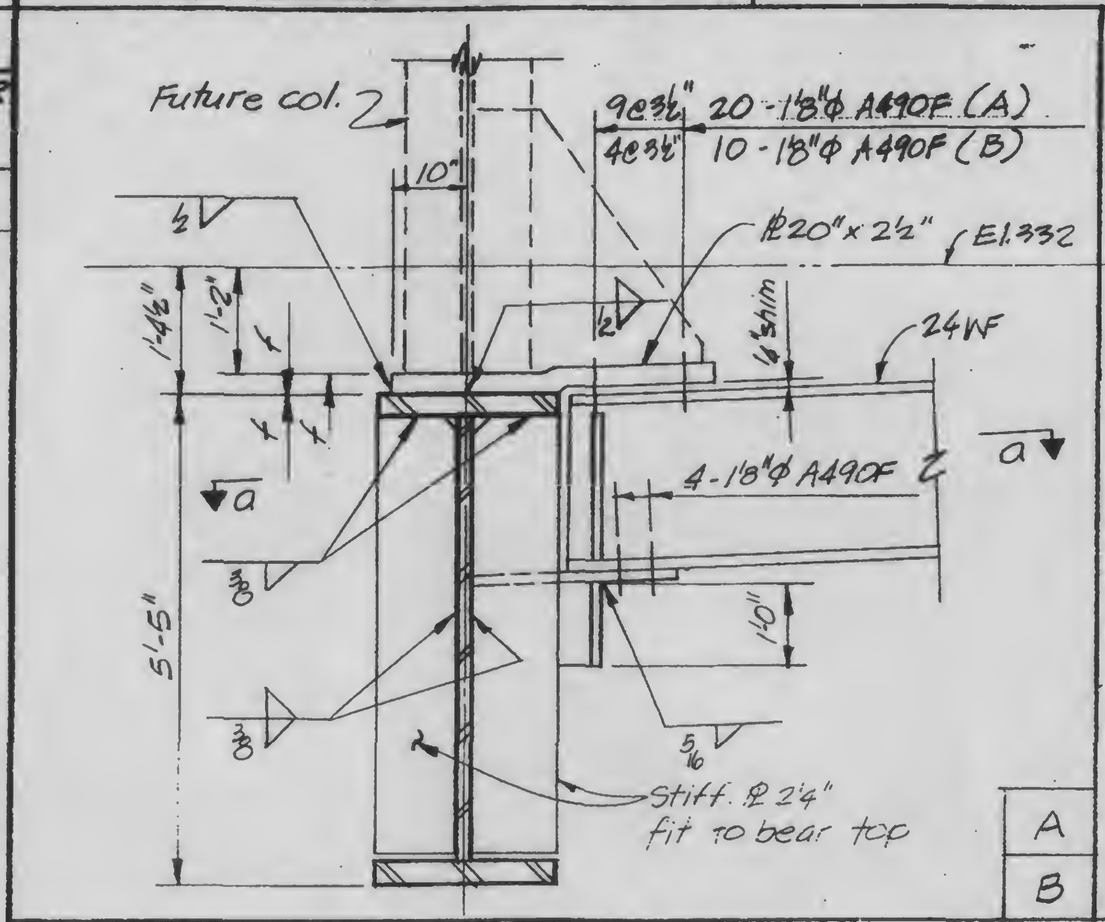

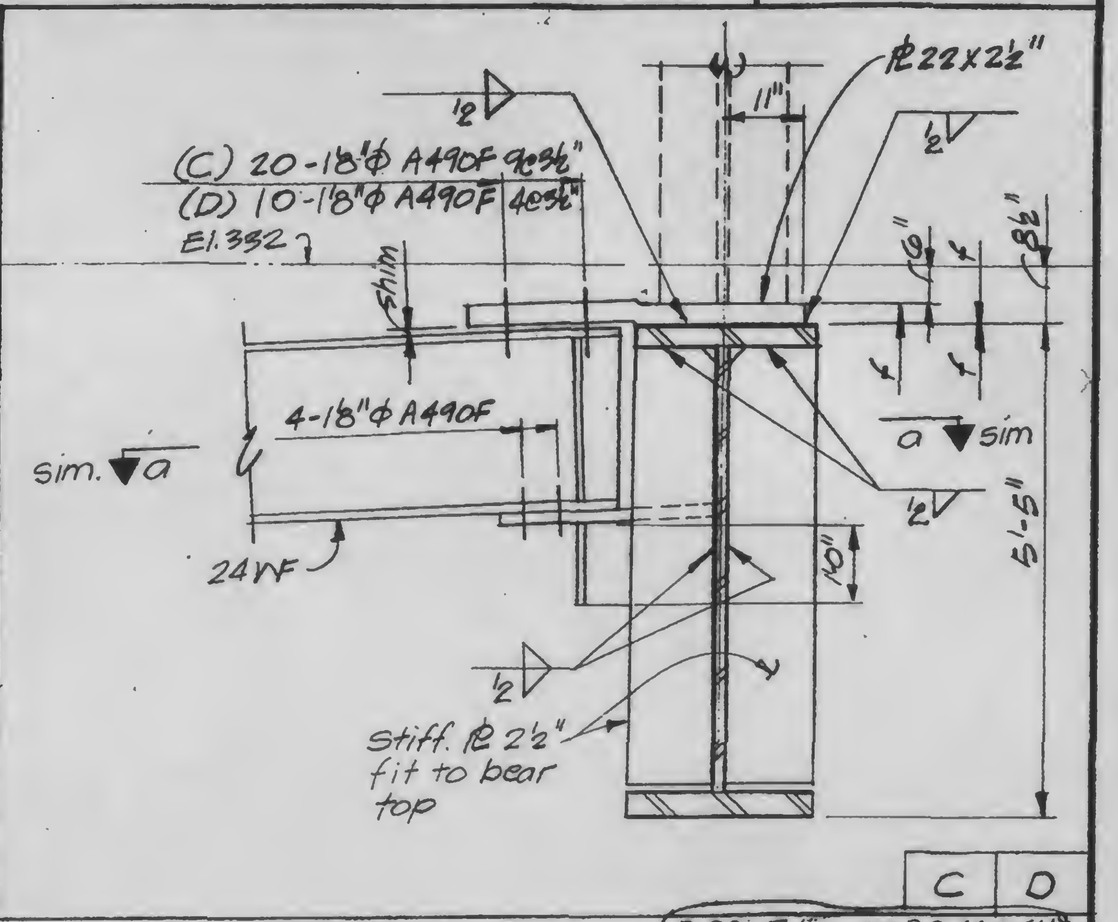

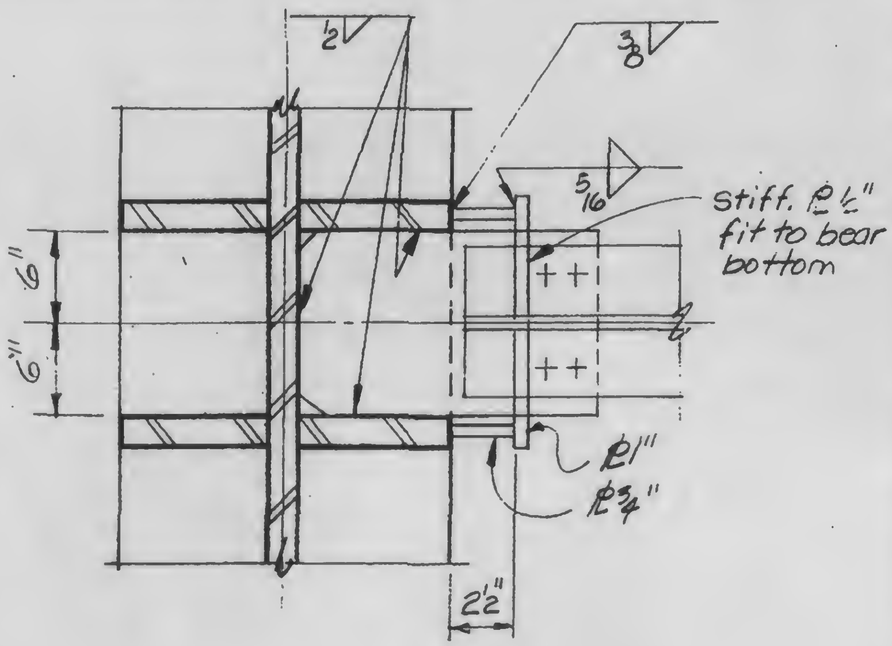

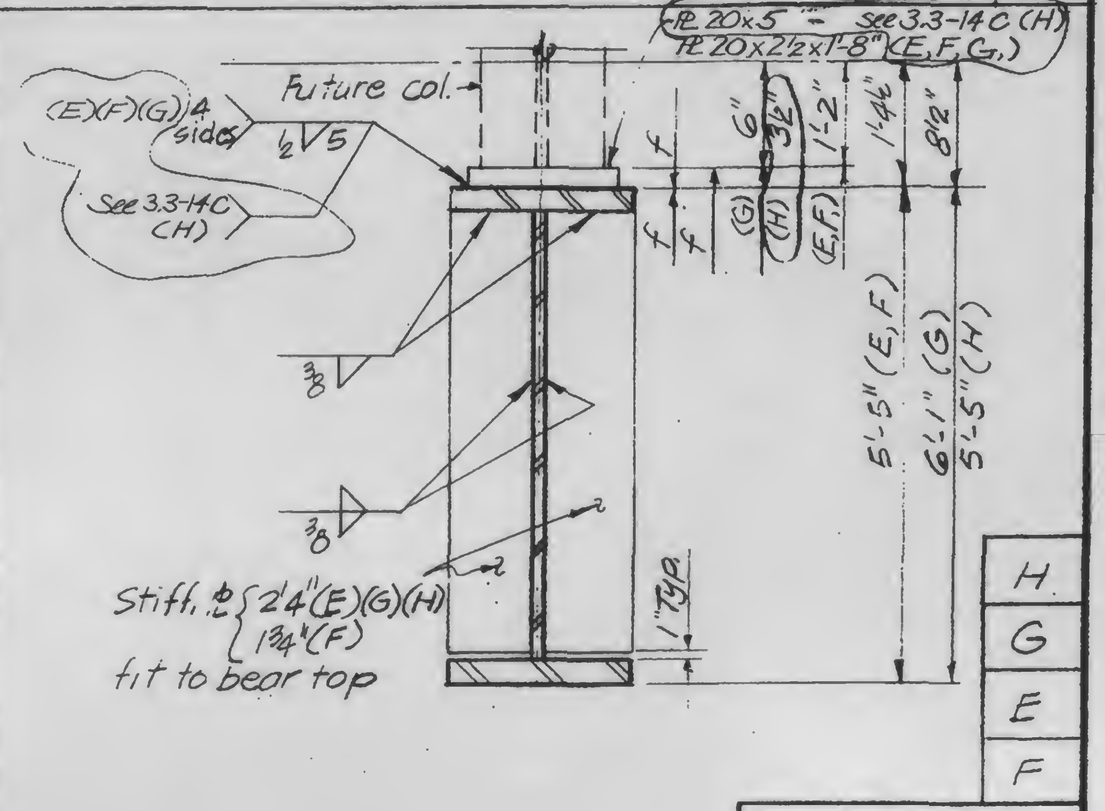

3-K 3.4-10

LICENSED PROFESSIONAL ENGINEER — LESLIE E. ROBERTSON — No. 34360 — UNIVERSITY OF THE STATE OF NEW YORK

DESIGNED

DRAWN

REVIEWED

SKILLING, HELLE, CHRISTIANSEN, ROBERTSON — Structural & Civil Engineers

PROJECT: THE WORLD TRADE CENTER | TITLE: GIRDER CONN. AT FUTURE COLUMNS | DATE: 11-3-72

REVISIONS

RELEASED FOR CONSTRUCTION 11-24-72

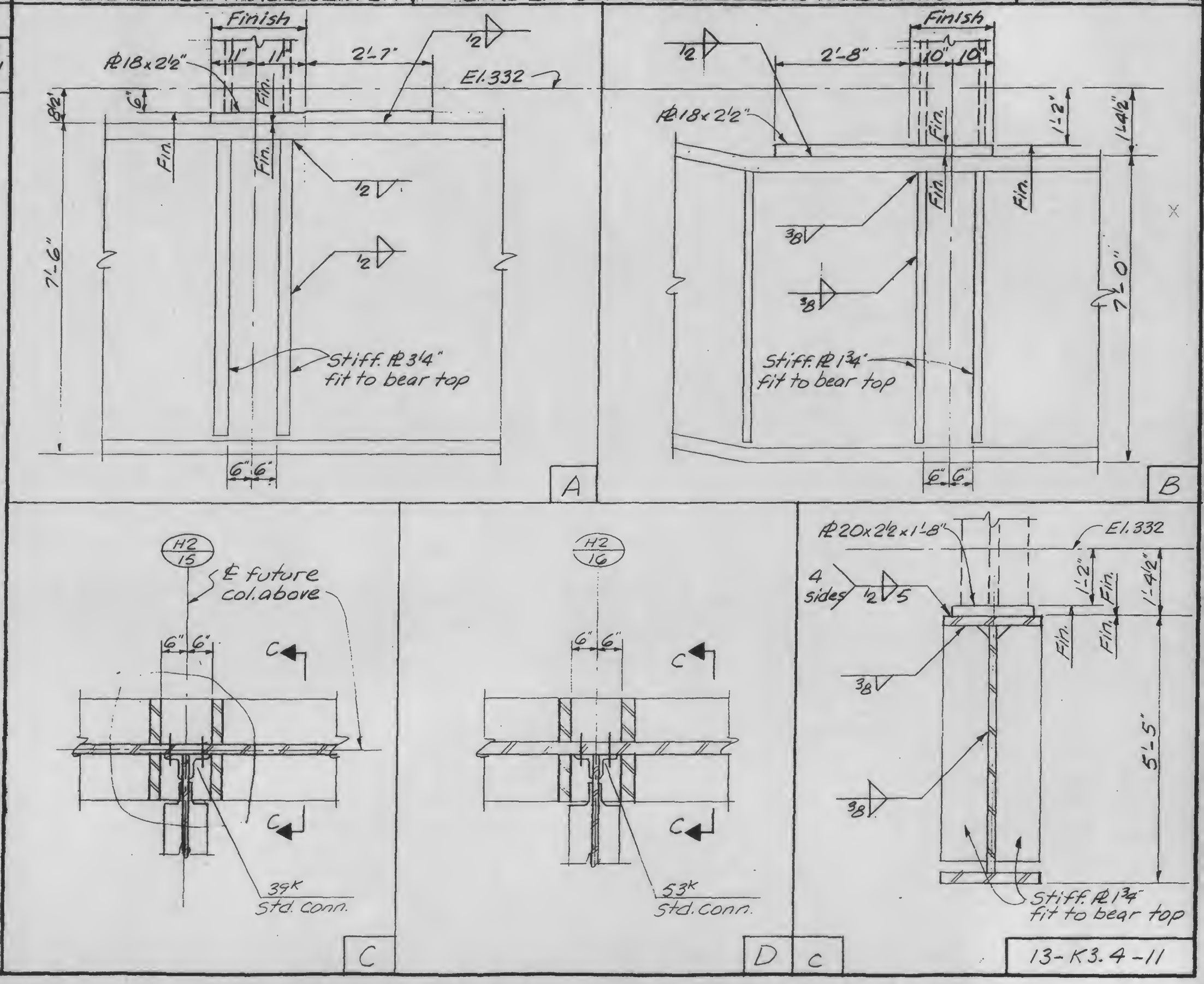

LICENSED PROFESSIONAL ENGINEER — LESLIE E. ROBERTSON — No 34360 — UNIVERSITY OF THE STATE OF NEW YORK

DESIGNED

DRAWN A.L. Franqui

REVIEWED

13-K3.4-11

SKILLING, HELLE, CHRISTIANSEN, ROBERTSON — Structural & Civil Engineers

PROJECT: THE WORLD TRADE CENTER

TITLE: GIRDER DETAILS AT FUTURE COLUMNS

DATE: 11-3-72

REVISIONS

Released for construction 11-24-72

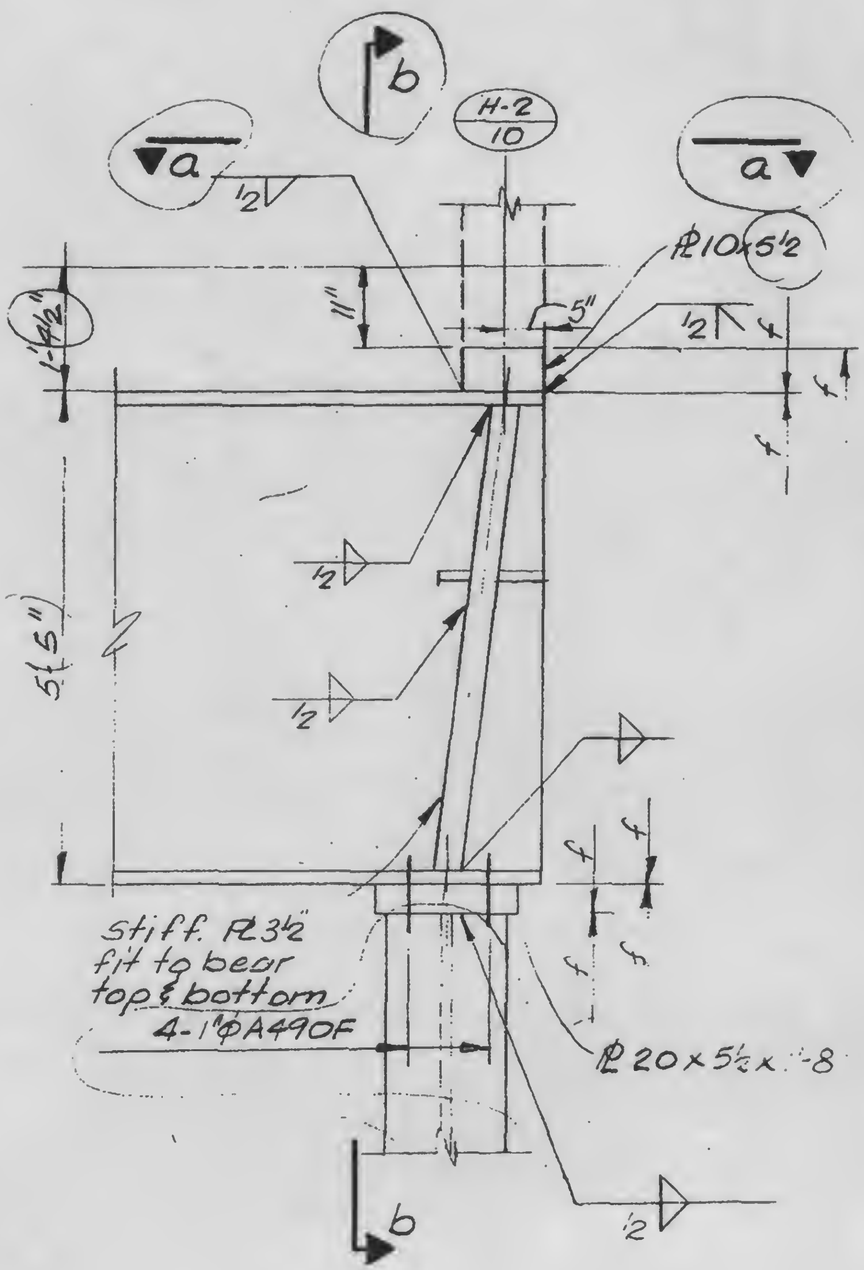

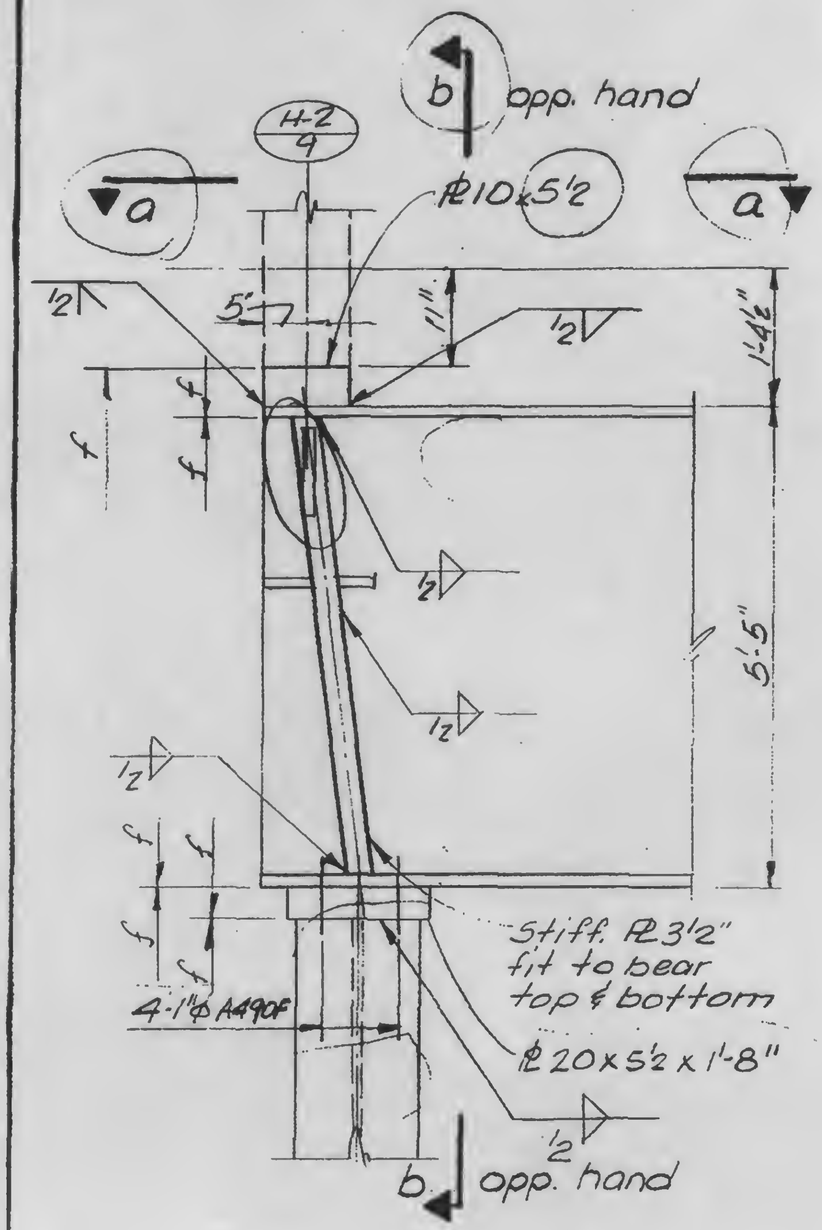

LICENSED PROFESSIONAL ENGINEER — LESLIE E. ROBERTSON — No. 34360 — UNIVERSITY OF THE STATE OF NEW YORK

DESIGNED

DRAWN TR

REVIEWED

A | B

13-K3.4-12.1

SKILLING, HELLE, CHRISTIANSEN, ROBERTSON · Structural & Civil Engineers

PROJECT: THE WORLD TRADE CENTER

TITLE: GIRDER DETAILS AT FUTURE COLUMNS

DATE: 11-24-72

REVISIONS

Released for construction 11-24-72

6-4-73

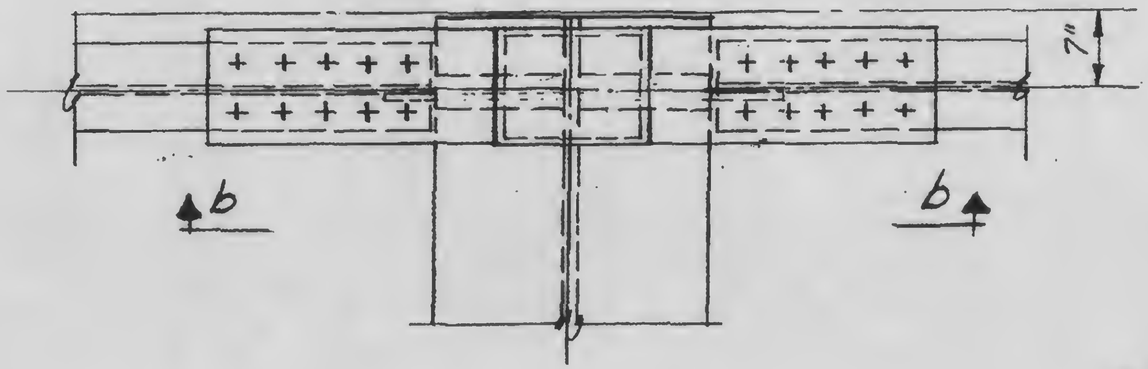

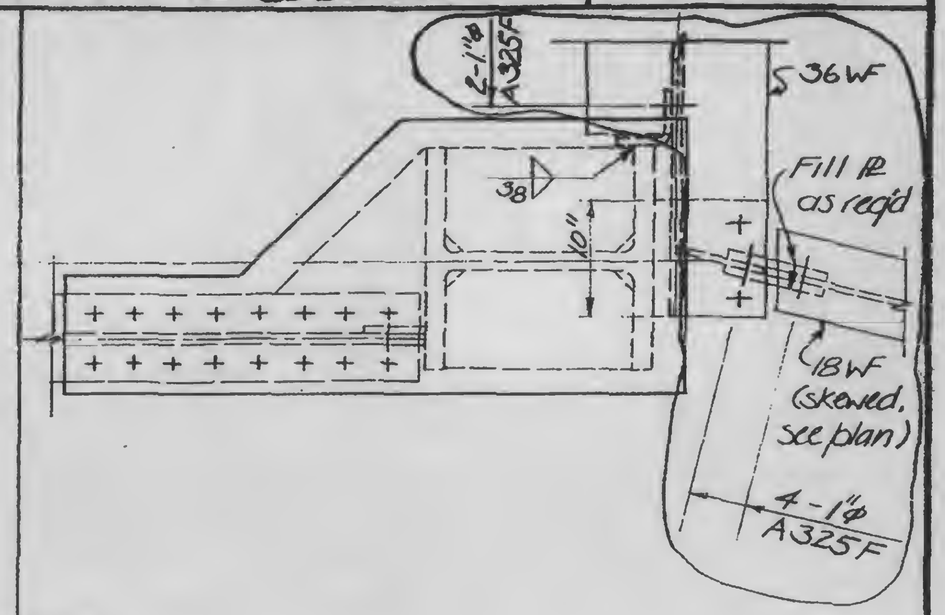

a c

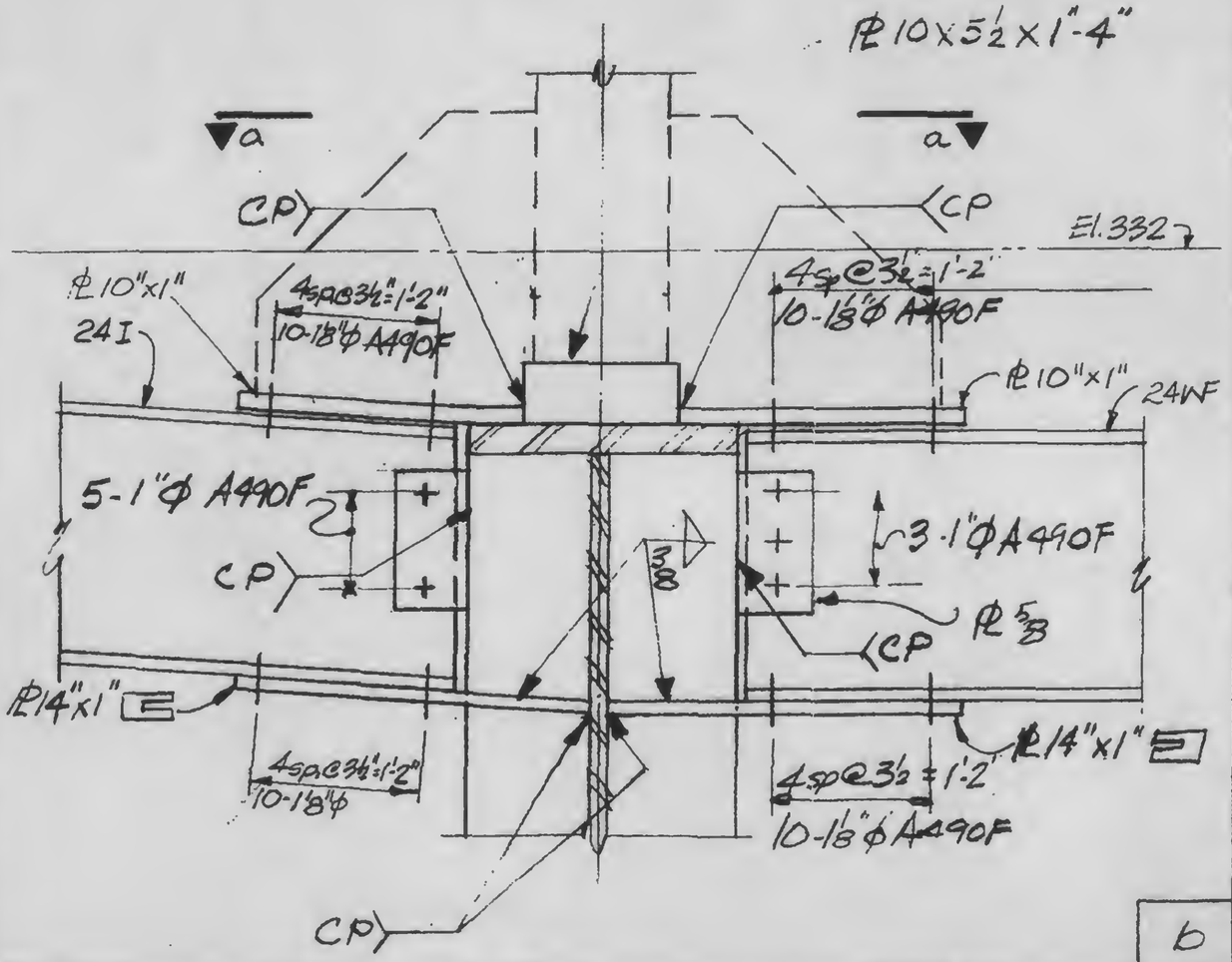

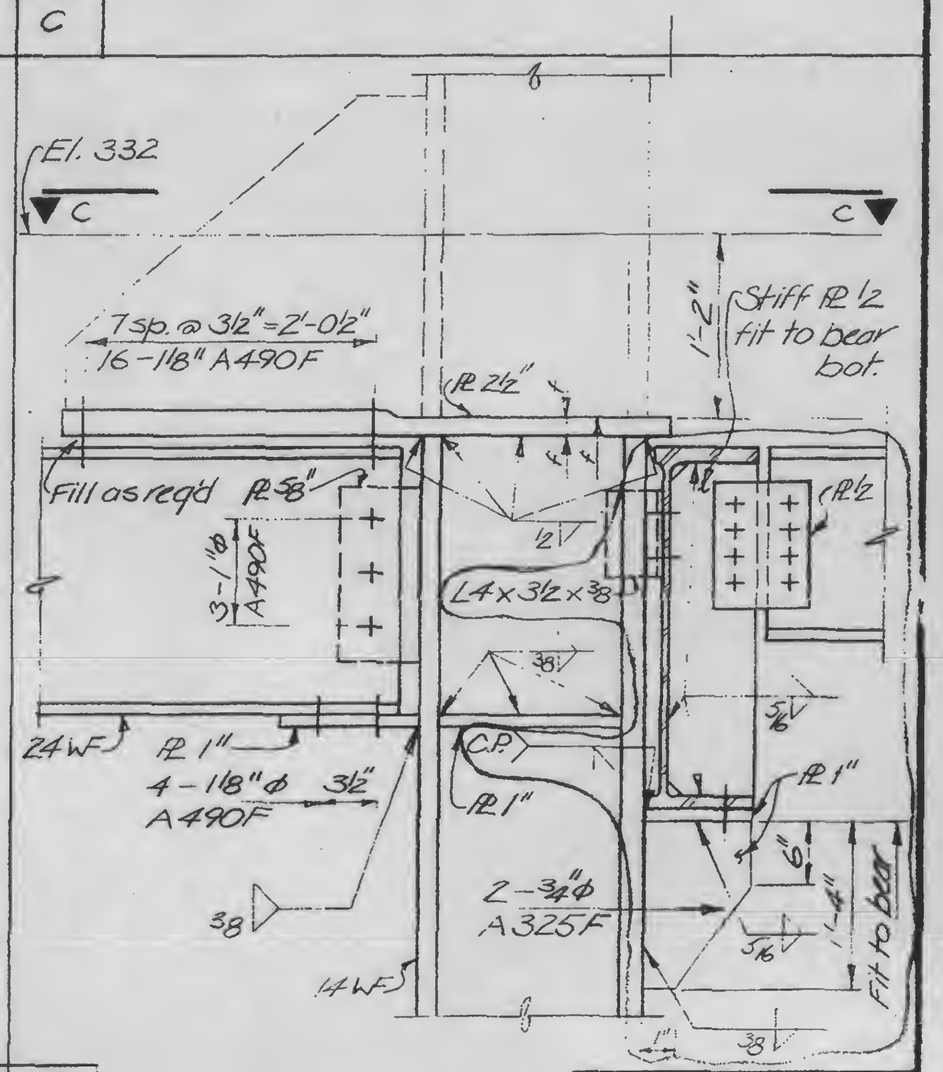

b C

13-K3.4-12.2

LICENSED PROFESSIONAL ENGINEER · LESLIE E. ROBERTSON · No. 34360 · UNIVERSITY OF THE STATE OF NEW YORK

DESIGNED

DRAWN

REVIEWED

SKILLING, HELLE, CHRISTIANSEN, ROBERTSON — Structural & Civil Engineers

PROJECT: THE WORLD TRADE CENTER | TITLE: BEAM CONNECTIONS AT GIRDER | DATE: 11-3-72

REVISIONS

RELEASE FOR CONSTRUCTION 11-20-72

2-5-73

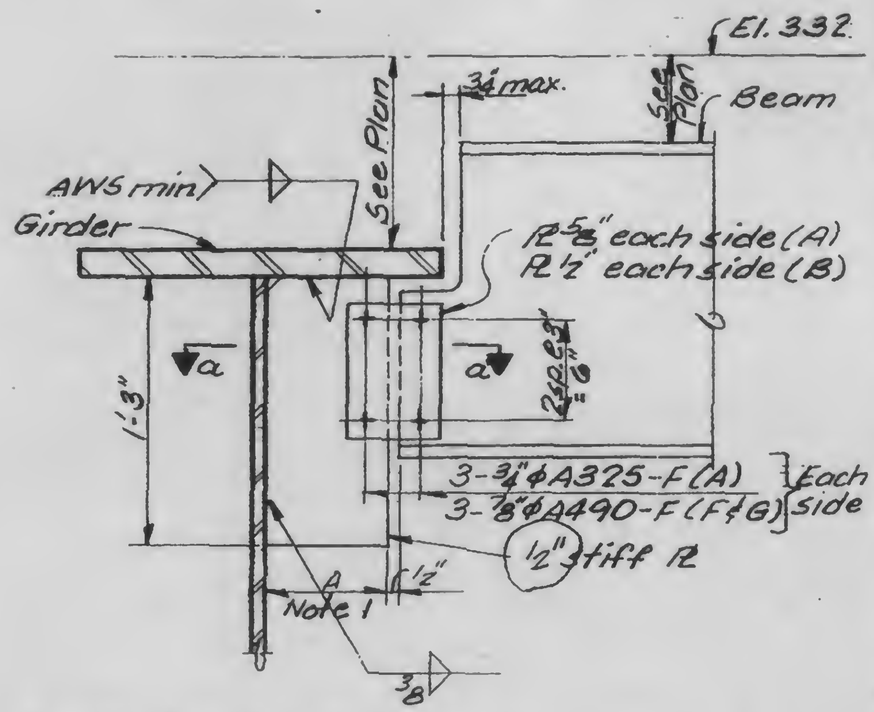

Note 1
Dim A = 8 or 1/2 of girder flange width, which ever is smaller.

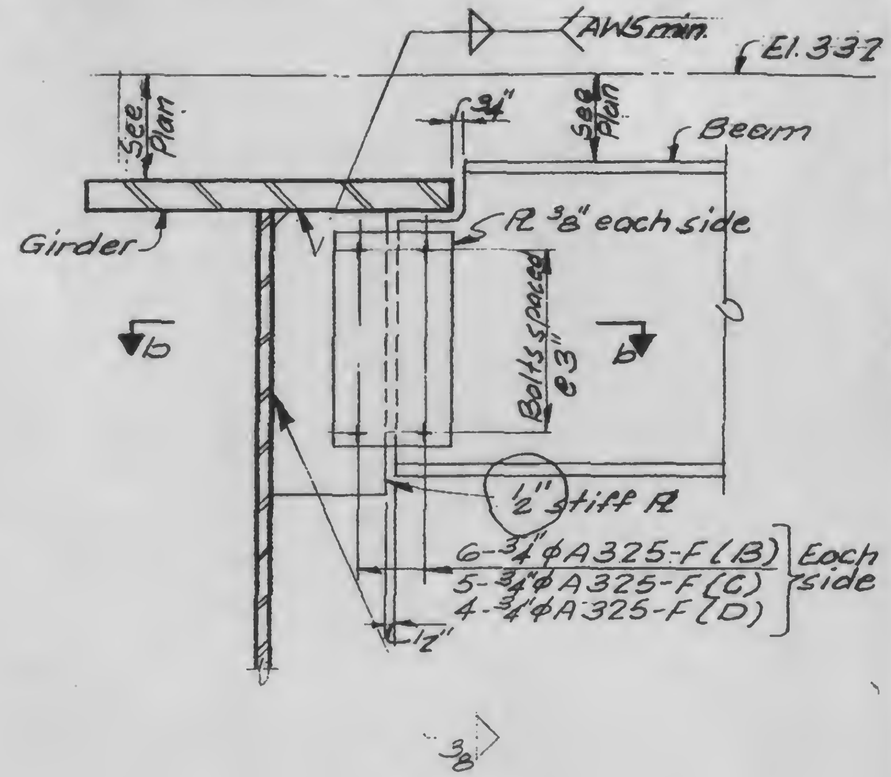

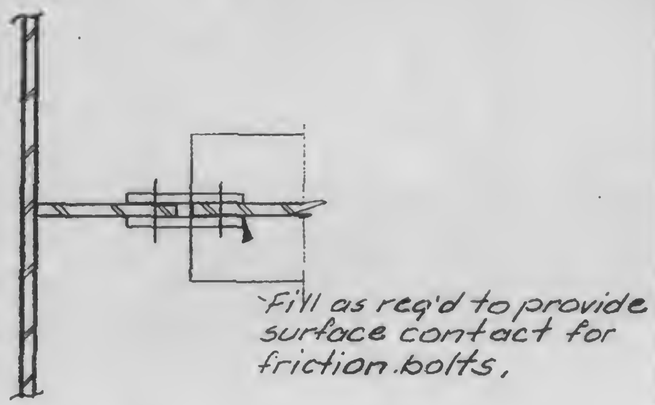

Section a-a

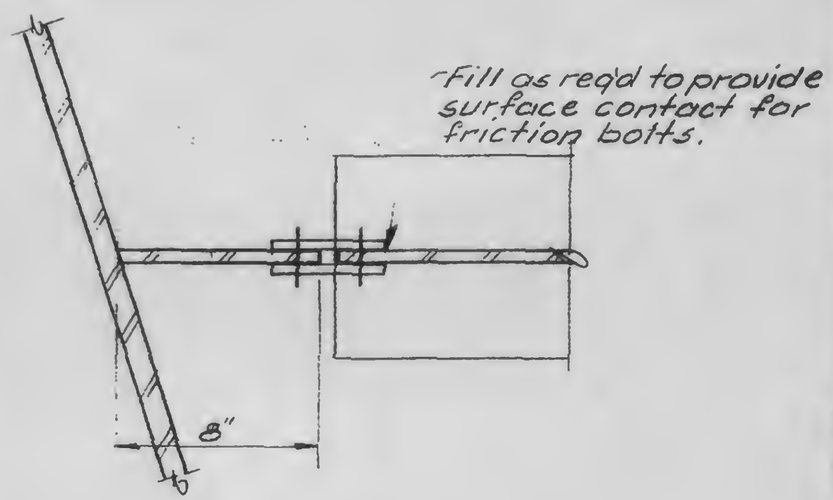

Section b-b

A	B
F	C
G	D

LICENSED PROFESSIONAL ENGINEER — LESLIE E. ROBERTSON — No. 34360 — UNIVERSITY OF THE STATE OF NEW YORK

DESIGNED

DRAWN — Hiums

REVIEWED

13-K3.5-1

SKILLING, HELLE, CHRISTIANSEN, ROBERTSON — Structural & Civil Engineers

PROJECT: THE WORLD TRADE CENTER | TITLE: BEAM CONNECTIONS AT GIRDERS | DATE: 11-3-72

REVISIONS

RELEASE FOR CONSTRUCTION 11-20-72

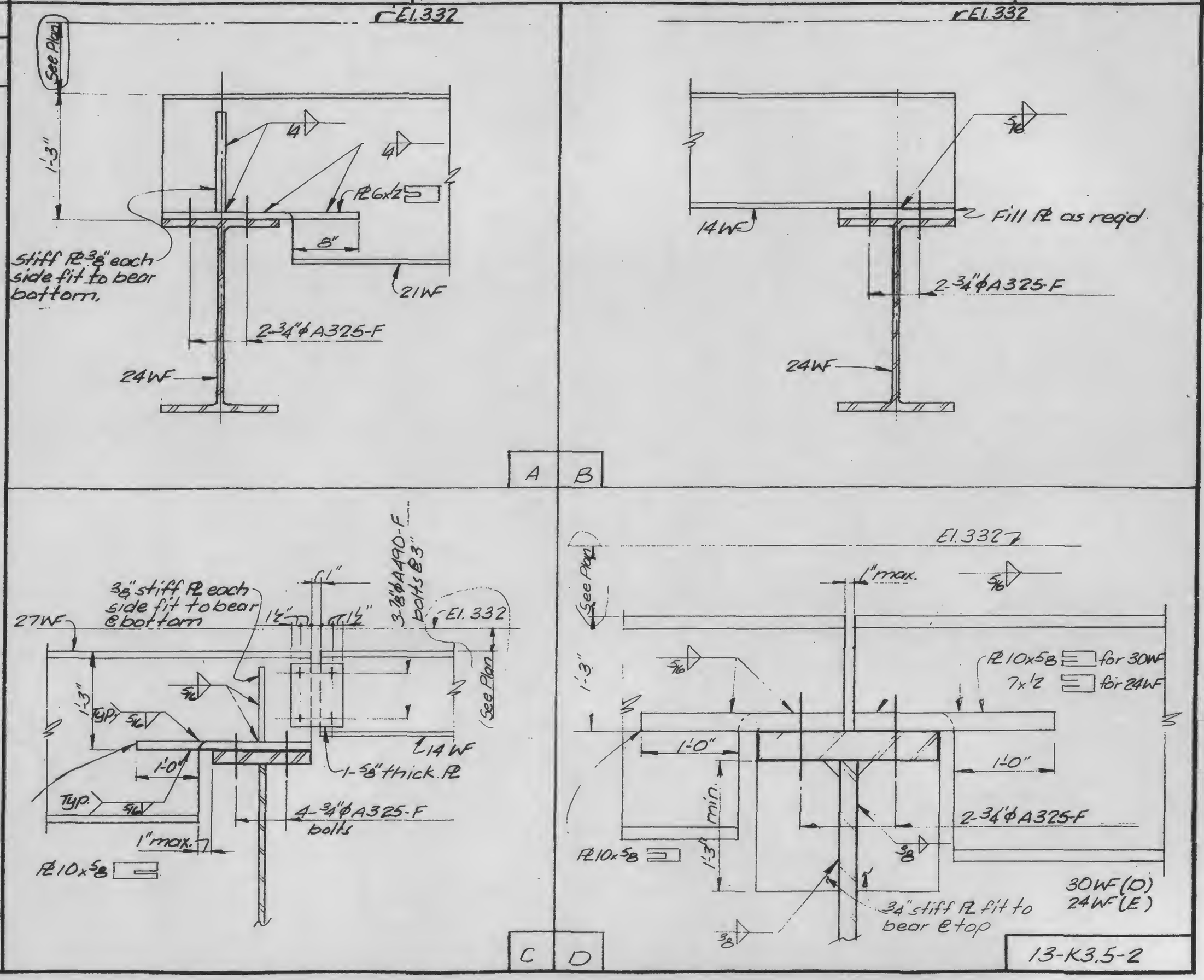

LICENSED PROFESSIONAL ENGINEER — LESLIE E. ROBERTSON — No. 34360 — UNIVERSITY OF THE STATE OF NEW YORK

DESIGNED

DRAWN: TR

REVIEWED

13-K3.5-2

SKILLING, HELLE, CHRISTIANSEN, ROBERTSON — Structural & Civil Engineers

PROJECT: THE WORLD TRADE CENTER | TITLE: BALLROOM GIRDER - ELEVATIONS | DATE: 11-3-72

REVISIONS

RELEASE FOR CONSTRUCTION 11-20-72

12-11-72

6-4-73

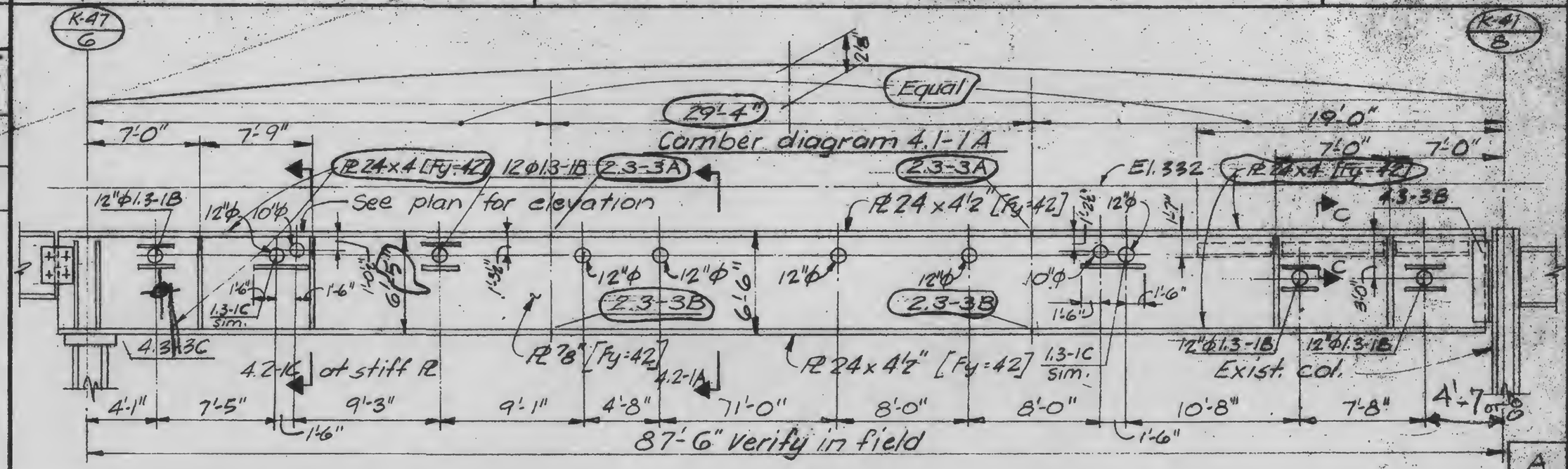

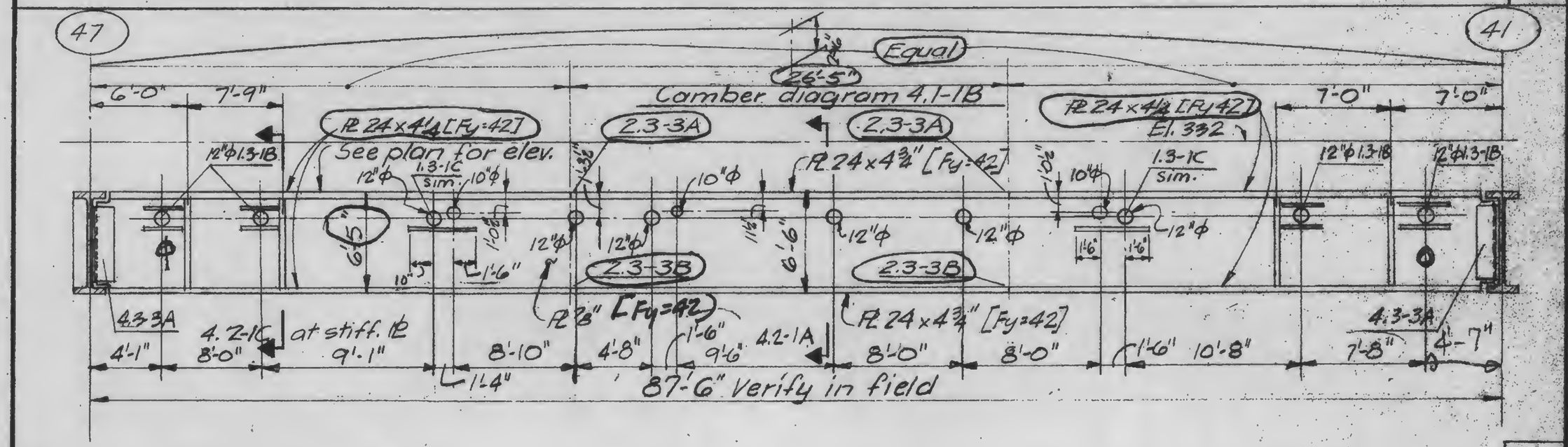

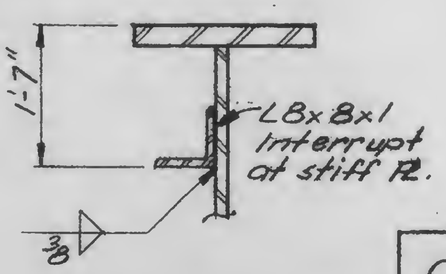

C

LICENSED PROFESSIONAL ENGINEER — LESLIE E. ROBERTSON — No. 34360 — UNIVERSITY OF THE STATE OF NEW YORK

DESIGNED: WAB

DRAWN: TR

REVIEWED:

13-K 4.1-1

SKILLING, HELLE, CHRISTIANSEN, ROBERTSON — Structural Civil Engineers

PROJECT: THE WORLD TRADE CENTER | TITLE: BALLROOM GIRDER ELEVATIONS | DATE: 11-3-72

REVISIONS

RELEASE FOR CONSTRUCTION 11-20-72

12-11-72

6-4-73

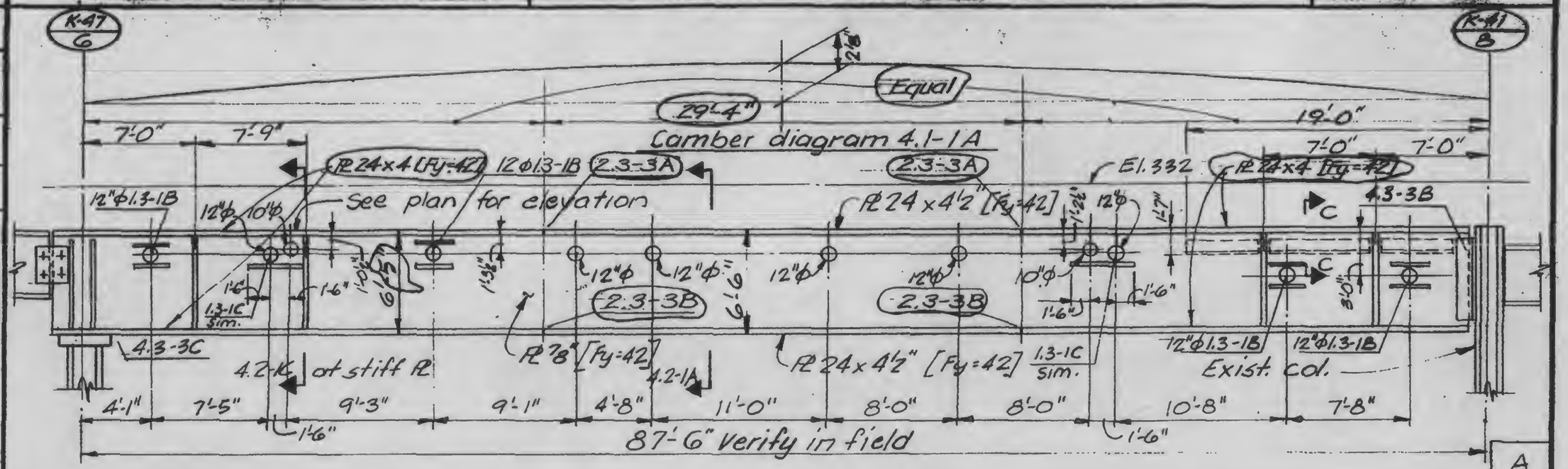

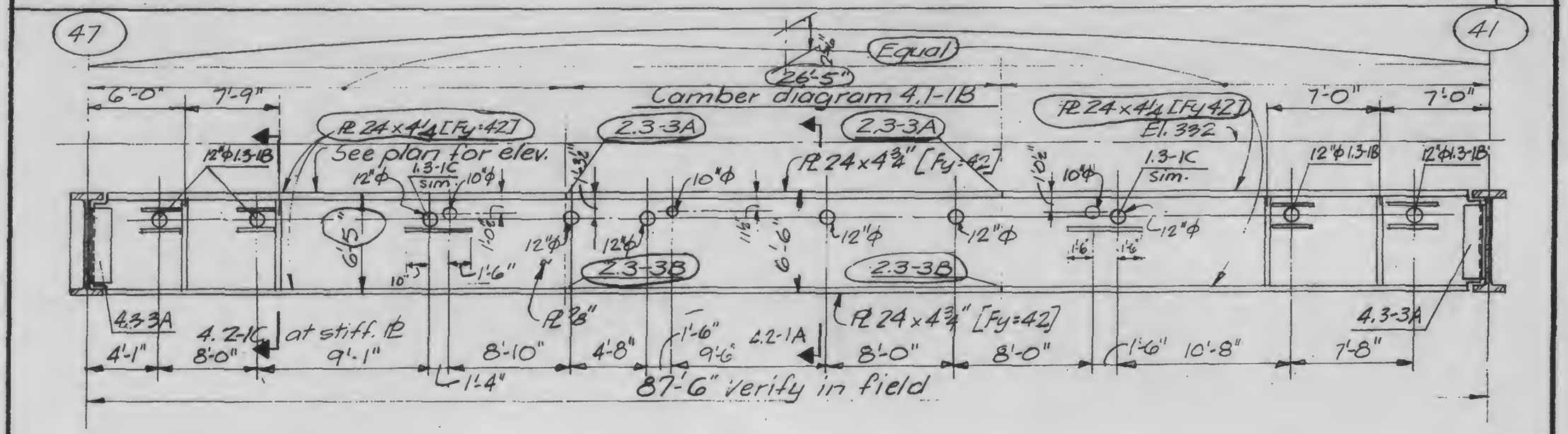

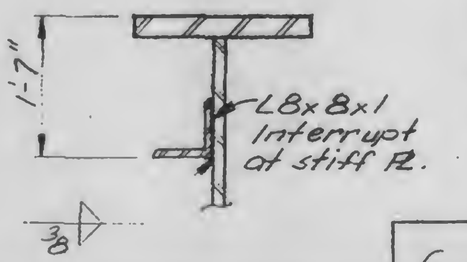

C

LICENSED PROFESSIONAL ENGINEER — LESLIE E. ROBERTSON — No. 34360 — UNIVERSITY OF THE STATE OF NEW YORK

DESIGNED: WAB

DRAWN: TR

REVIEWED:

13-K 4.1-1

SKILLING, HELLMUTH, ANSEN, ROBERTSON — Structural & Civil Engineers

PROJECT: THE WORLD TRADE CENTER

TITLE: BALLROOM GIRDER – ELEVATIONS

DATE: 11-3-72

REVISIONS

RELEASE FOR CONSTRUCTION 11-20-72

6-4-73

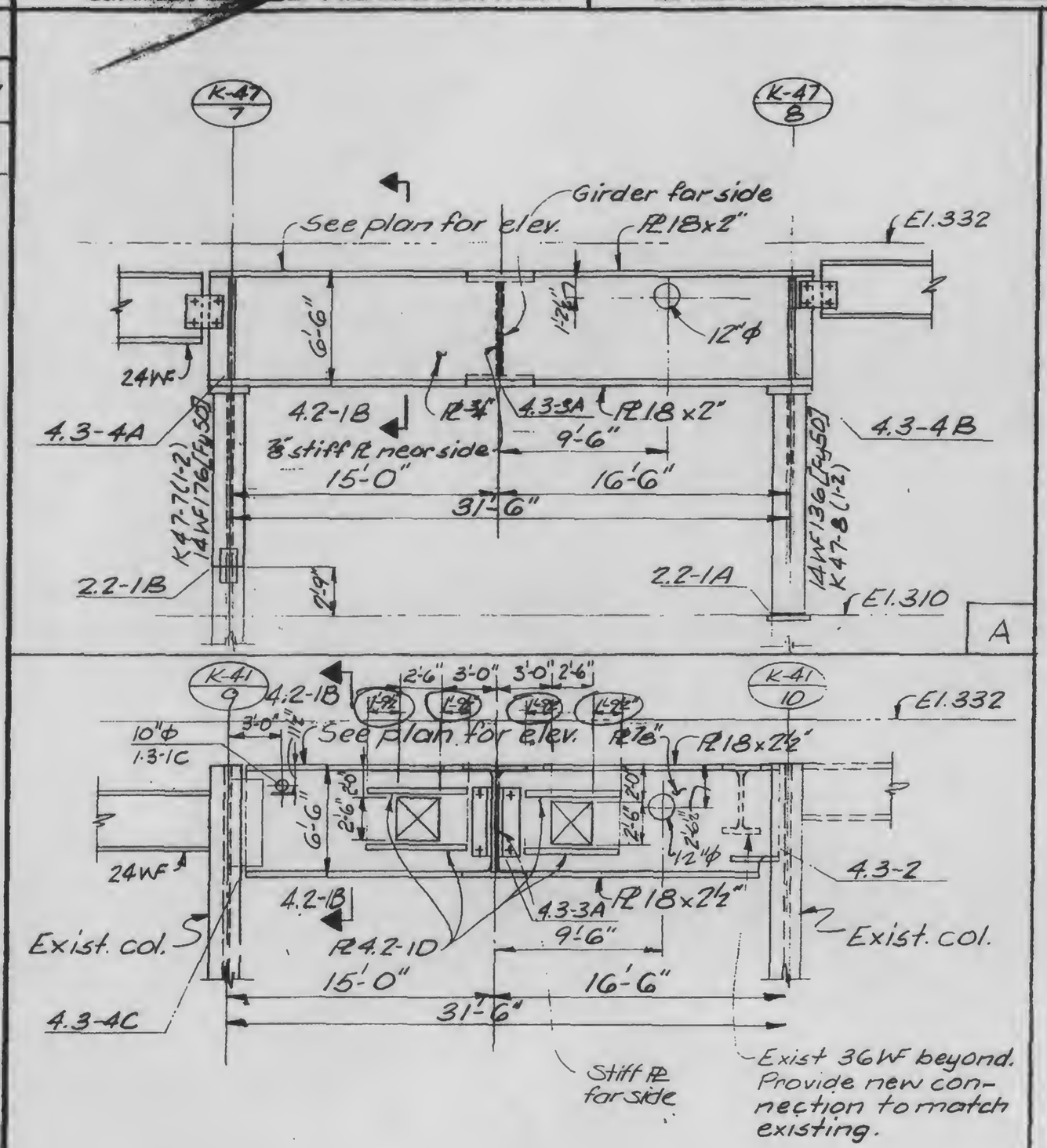

LICENSED PROFESSIONAL ENGINEER — LESLIE E. ROBERTSON — No. 34960 — UNIVERSITY OF THE STATE OF NEW YORK

DESIGNED: WAB

DRAWN: TR

REVIEWED:

13-K-4.1-2

SKILLING, HELLE, CHRISTIANSEN, ROBERTSON — Structural & Civil Engineers

PROJECT: THE WORLD TRADE CENTER | TITLE: BALLROOM GIRDERS - TYPICAL DETAILS | DATE: 11-3-72

REVISIONS

RELEASE FOR CONSTRUCTION 11-20-72

6-4-73

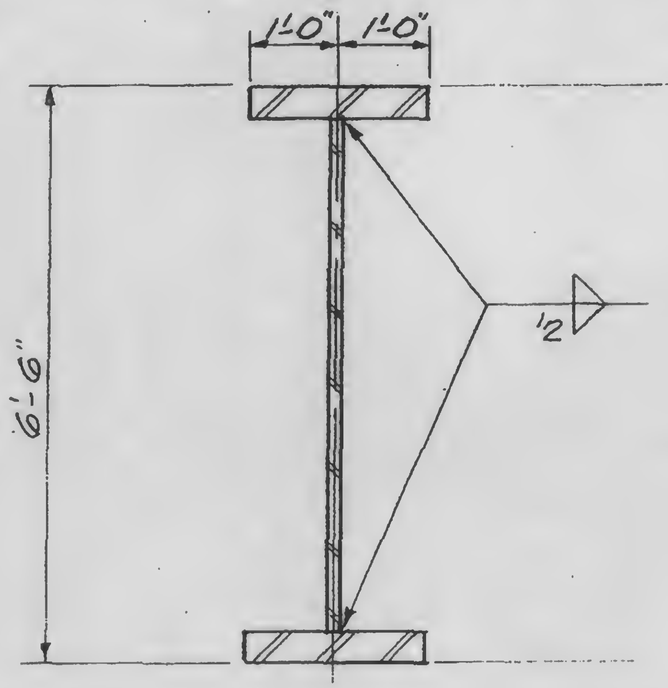

A

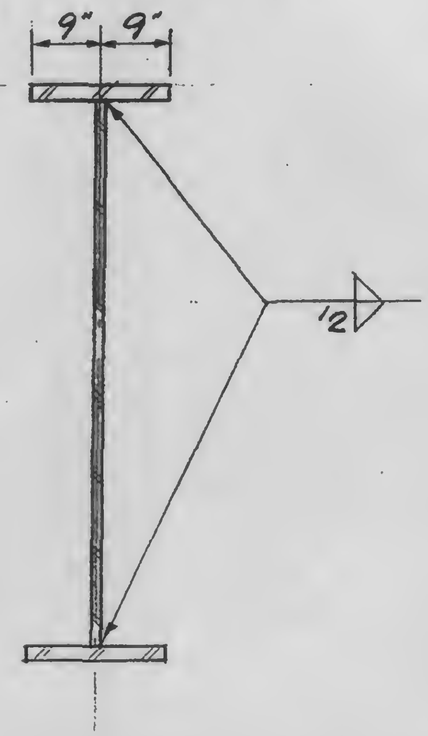

B

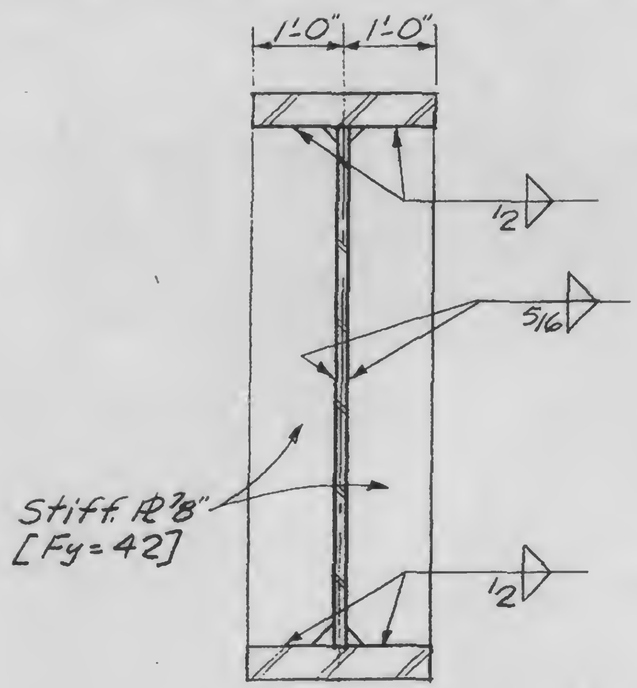

C

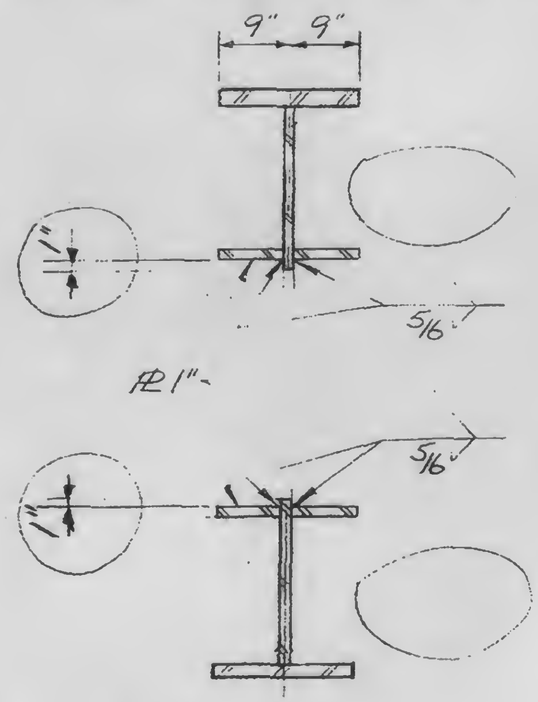

D

LICENSED PROFESSIONAL ENGINEER — LESLIE E. ROBERTSON — No. 34360 — UNIVERSITY OF THE STATE OF NEW YORK

DESIGNED

DRAWN A.L. Franqui

REVIEWED

13-K4.2-1

SKILLING, HELLE, CHRISTIANSEN, ROBERTSON — STRUCTURAL CITY ENGINEERS

PROJECT: THE WORLD TRADE CENTER — BALLROOM GIRDER SLIDE CONNECTION — DATE: 11-3-72

REVISIONS

General Revision Released for construction 11-24-72

3-21-73

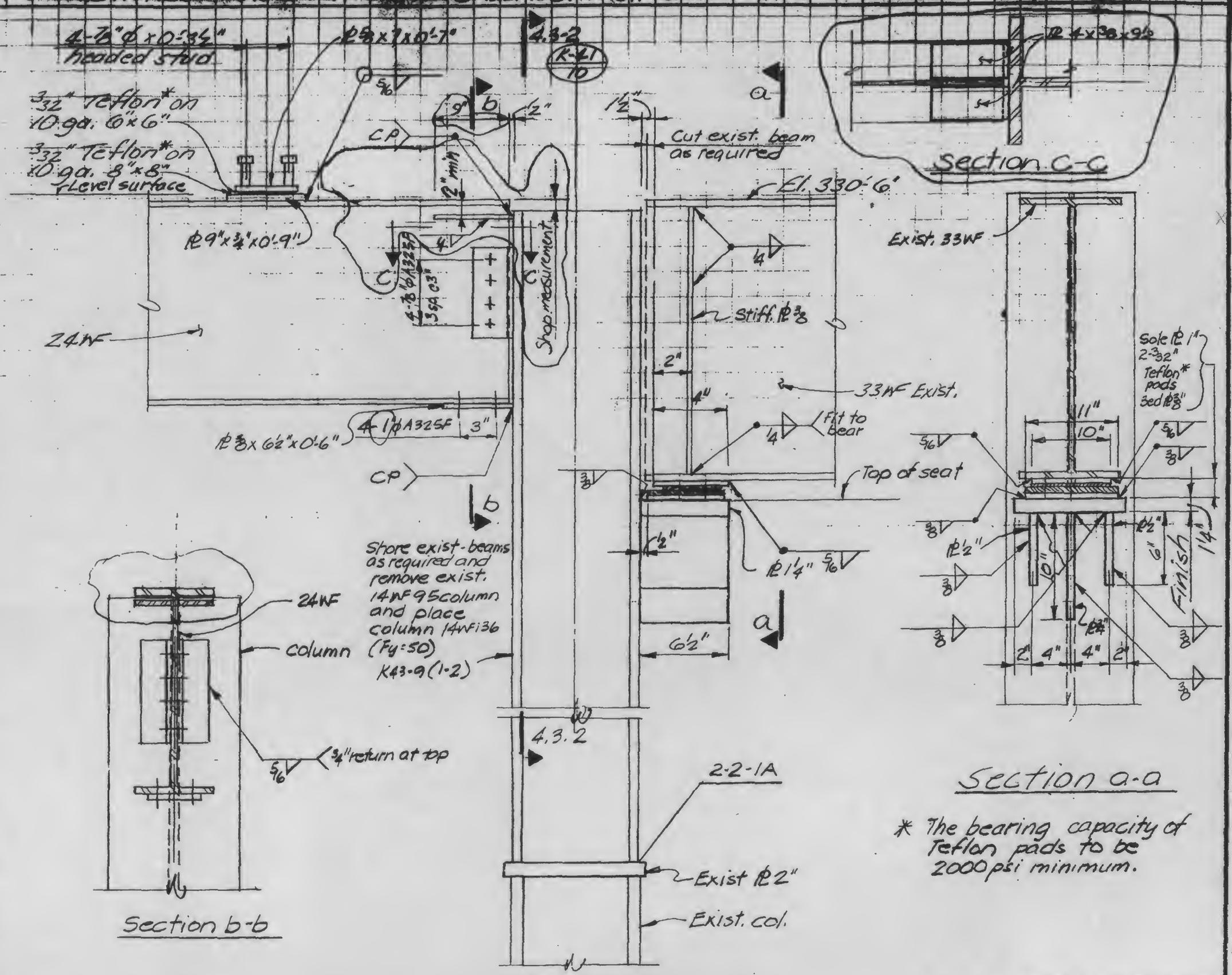

* The bearing capacity of Teflon pads to be 2000 psi minimum.

LICENSED PROFESSIONAL ENGINEER — LESLIE E. ROBERTSON — No. 34360 — UNIVERSITY OF THE STATE OF NEW YORK

DESIGNED

DRAWN

REVIEWED

13-K4.3-1

SKILLING, HELLE, CHRISTIANSEN, ROBERTSON — Structural & Civil Engineers

PROJECT: THE WORLD TRADE CENTER | TITLE: BALLROOM GIRDER - END CONNECTION | DATE: 11-3-72

REVISIONS

General revision released for construction 11-24-72

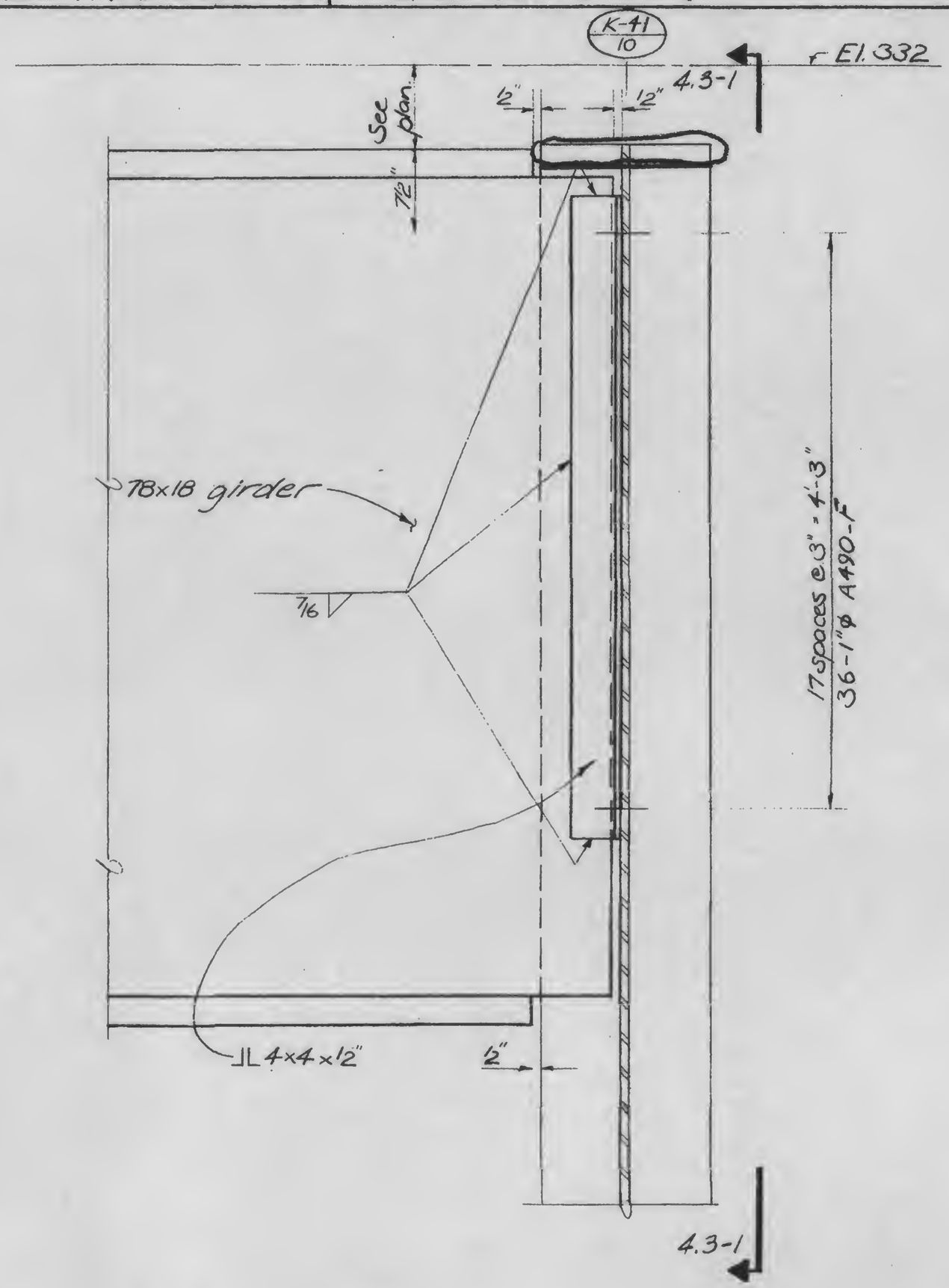

LICENSED PROFESSIONAL ENGINEER
LESLIE E. ROBERTSON
No. 34360
UNIVERSITY OF THE STATE OF NEW YORK

DESIGNED

DRAWN

REVIEWED

13-K 4.3-2

SKILLING, HELLE, CHRISTIANSEN, ROBERTSON — Structural & Civil Engineers

PROJECT: THE WORLD TRADE CENTER

TITLE: BALLROOM GIRDER - END CONNECTION

DATE: 11-3-72

REVISIONS

General revision released for construction 11-24-72

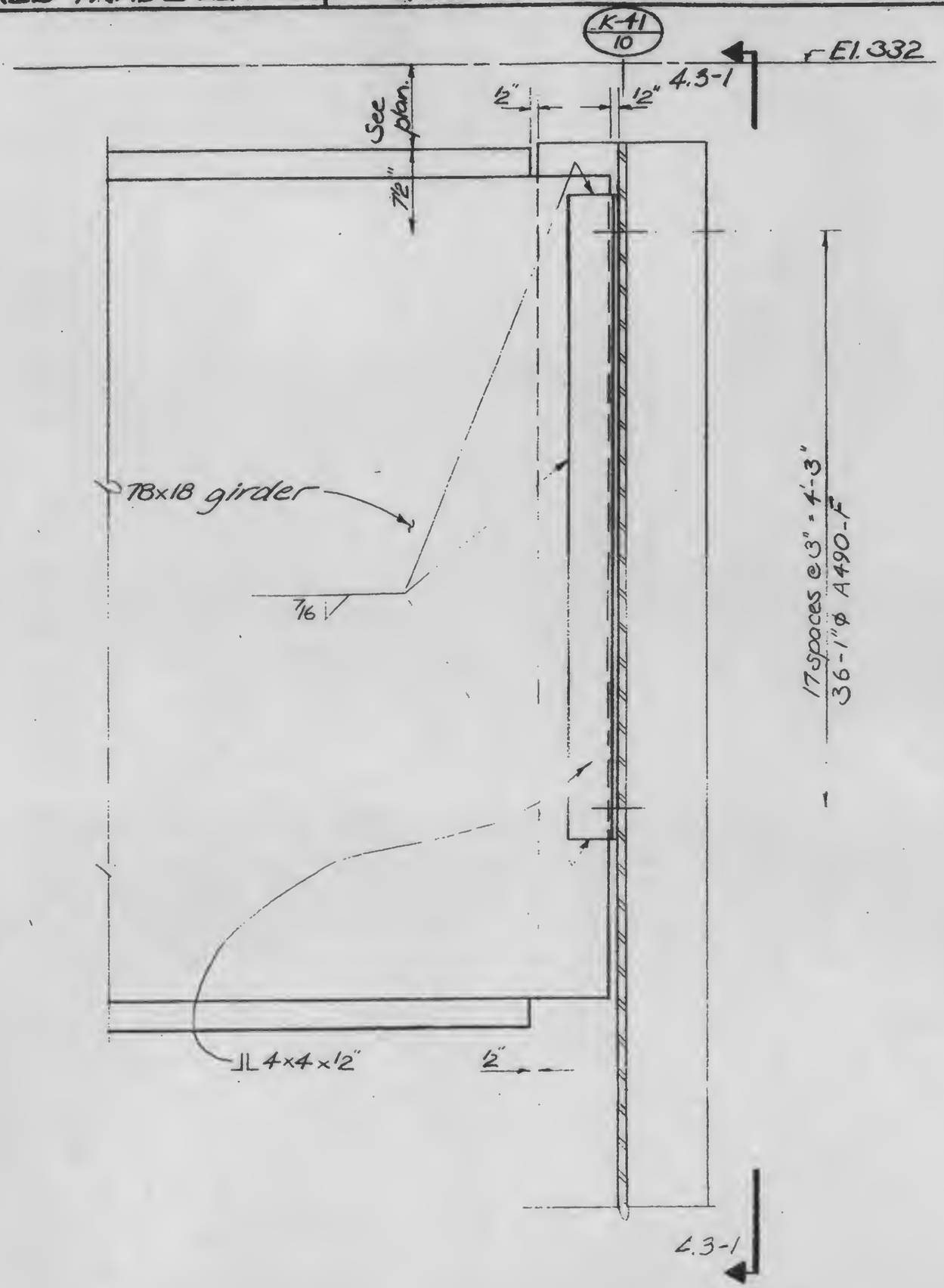

DESIGNED

DRAWN

REVIEWED

13-K 4.3-2

SKILLING, HELLE, CHRISTIANSEN, ROBERTSON — Structural & Civil Engineers

PROJECT: THE WORLD TRADE CENTER | TITLE: BALLROOM GIRDERS - END CONNECTIONS | DATE: 11-3-72

REVISIONS

RELEASE FOR CONSTRUCTION 11-20-72

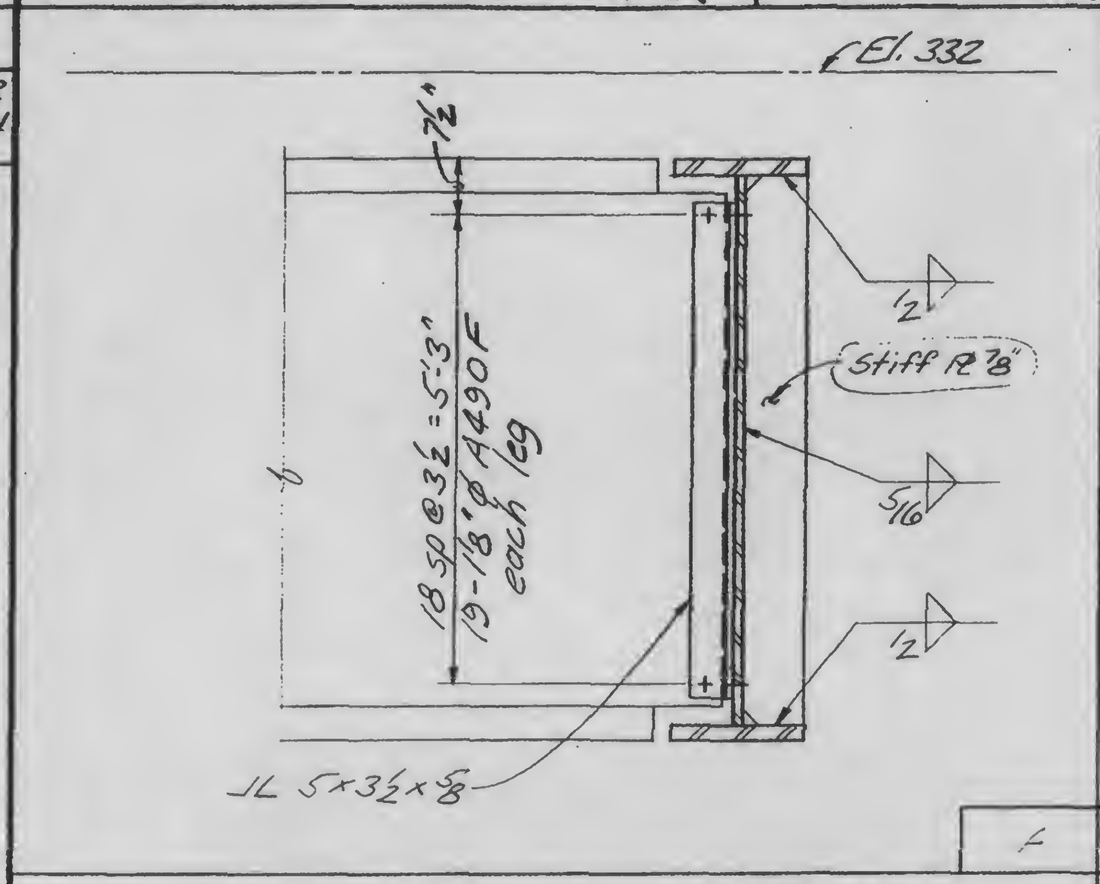

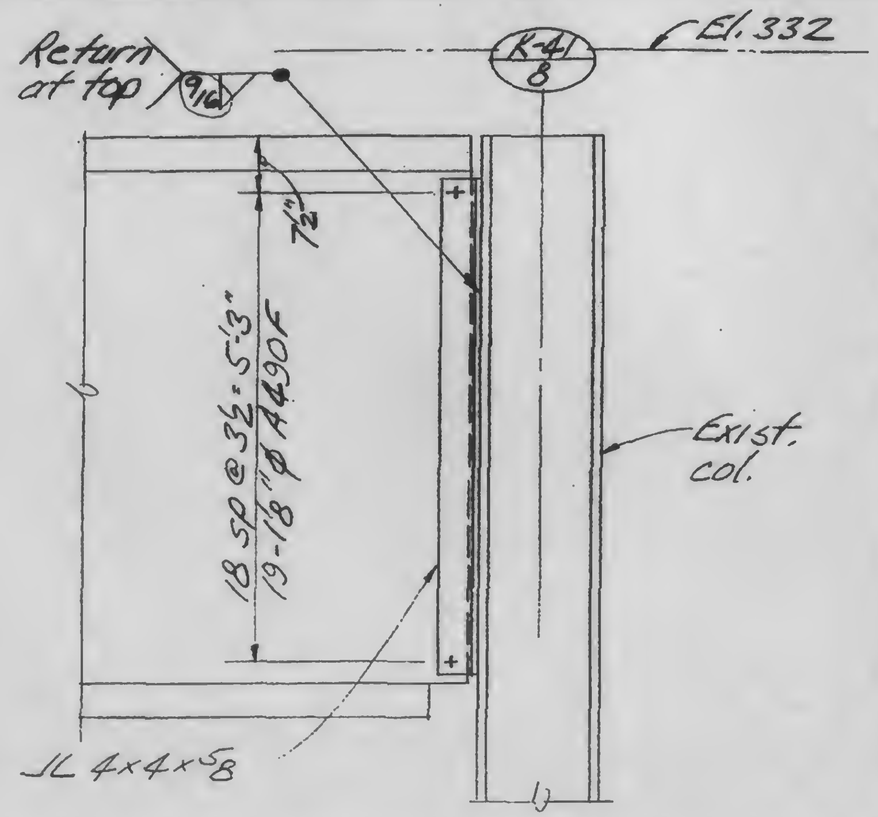

F | B

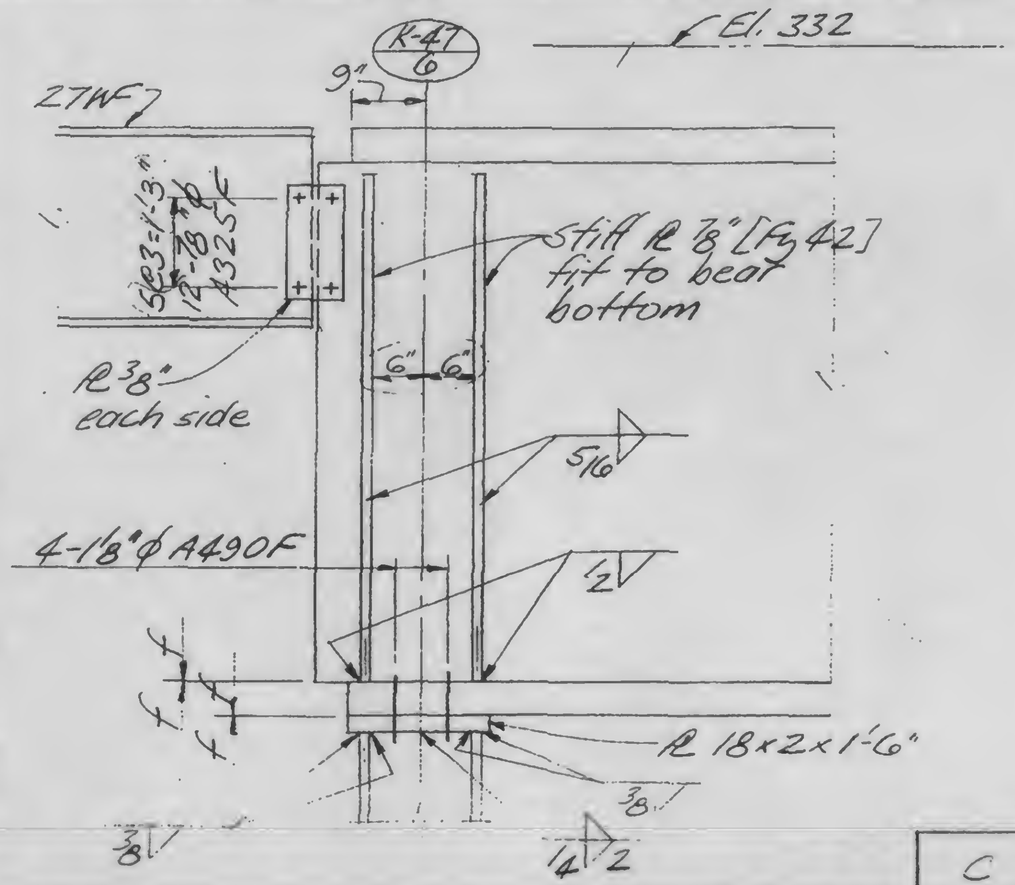

C

DESIGNED

DRAWN

REVIEWED

LICENSED PROFESSIONAL ENGINEER — LESLIE E. ROBERTSON — No 34360 — UNIVERSITY OF THE STATE OF NEW YORK

13-K4.3-3

SKILLING, HELLE, CHRISTIANSEN, ROBERTSON — Structural & Civil Engineers

PROJECT: THE WORLD TRADE CENTER

TITLE: BALLROOM GIRDER END CONNECTION

DATE: 11-3-72

REVISIONS

RELEASED FOR CONSTRUCTION 11-20-72

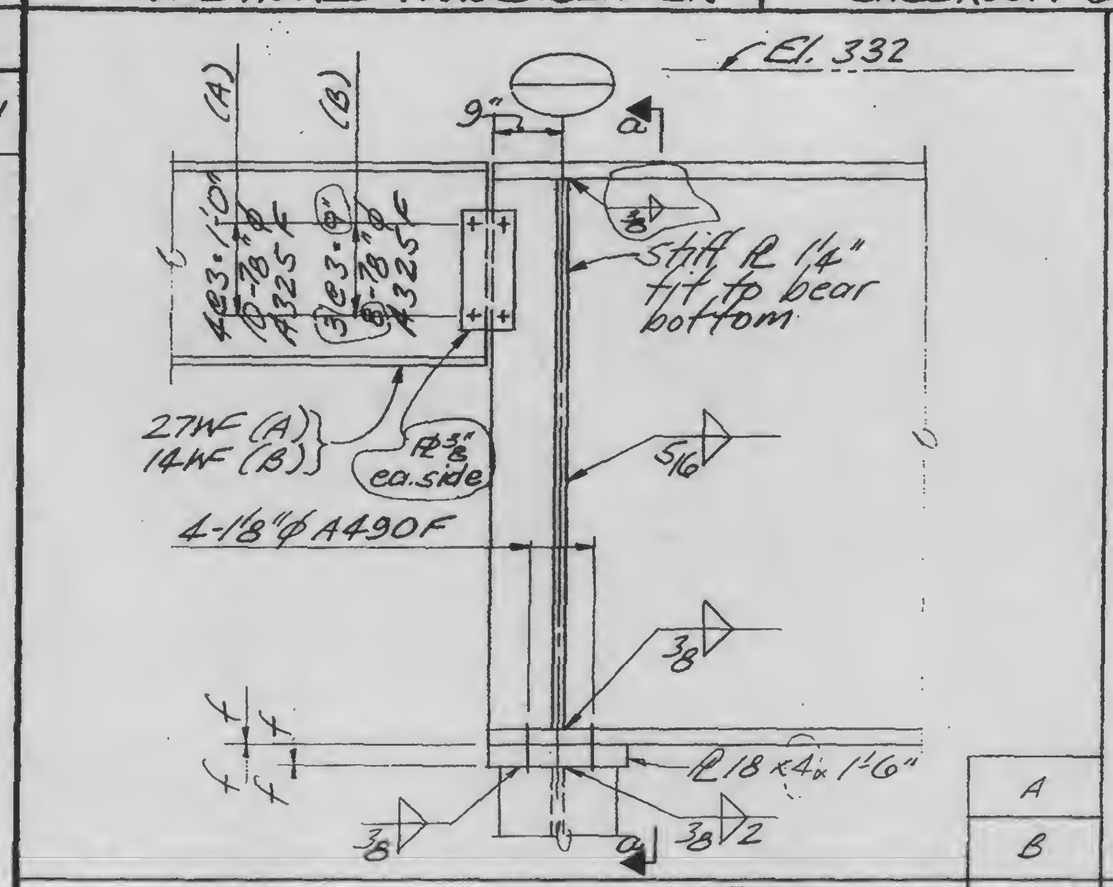

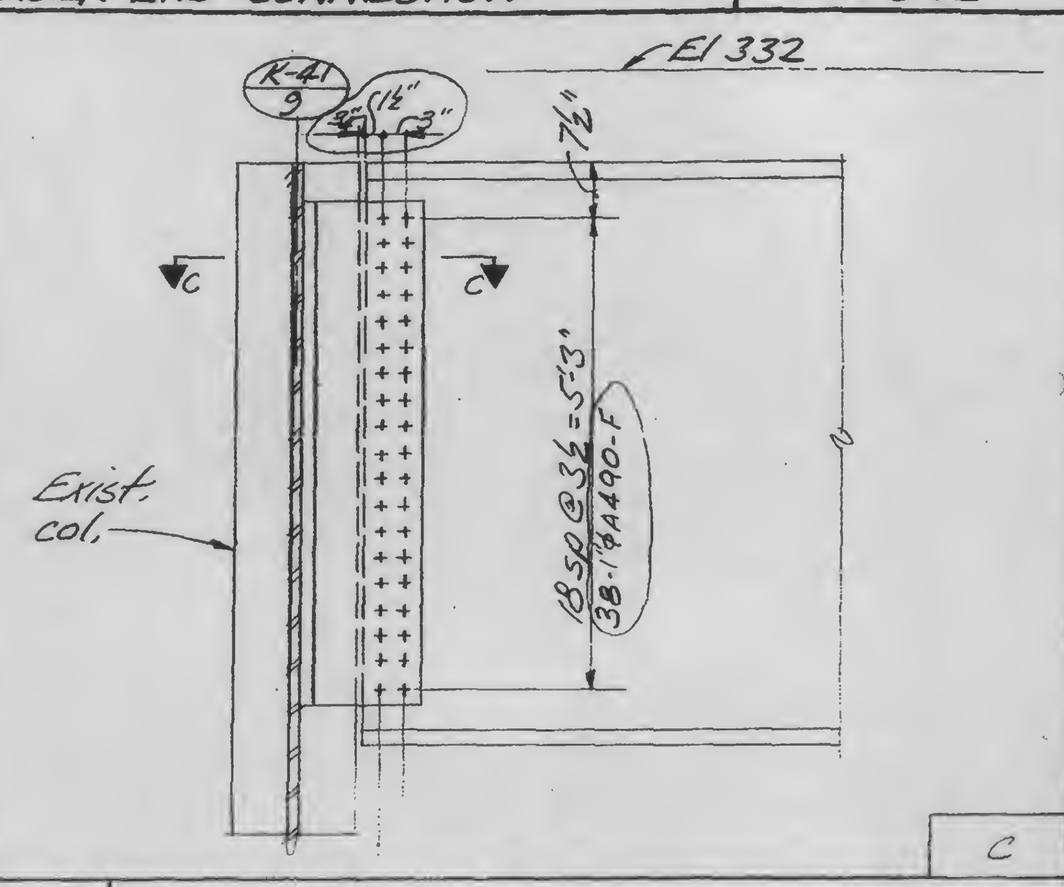

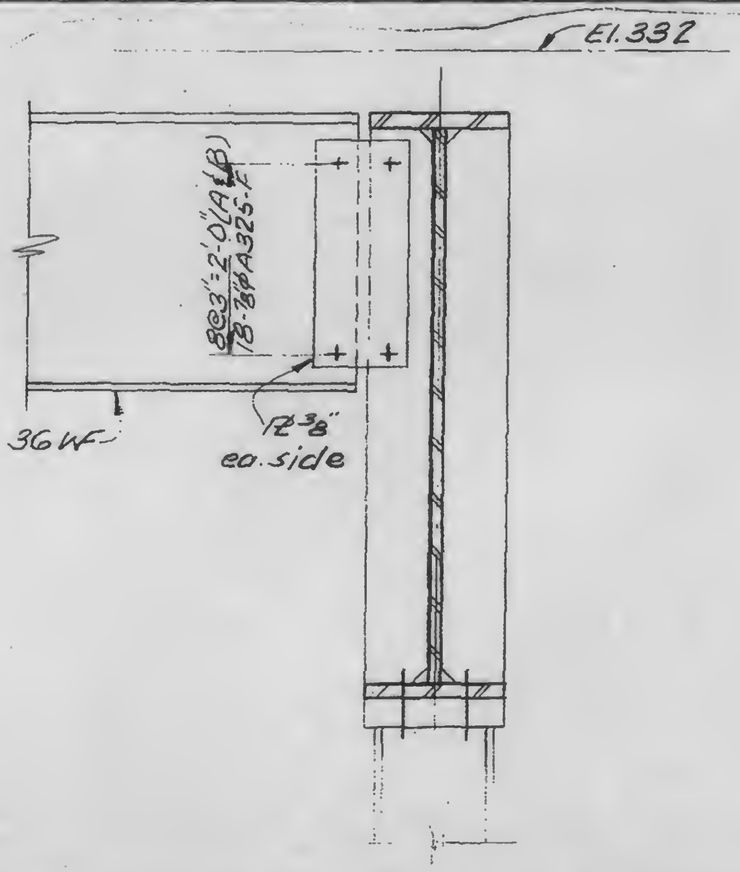

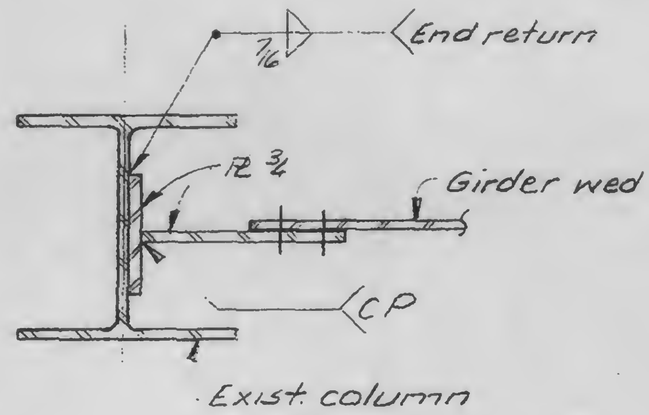

LICENSED PROFESSIONAL ENGINEER — LESLIE E. ROBERTSON — No. 34360 — UNIVERSITY OF THE STATE OF NEW YORK

DESIGNED

DRAWN

REVIEWED

13-K4.3-4

SKILLING, HELLE, CHRISTIANSEN, ROBERTSON — Structural & Civil Engineers

PROJECT: THE WORLD TRADE CENTER

TITLE: CONNECTIONS AT COLUMN

DATE: 11-3-72

REVISIONS

Released for Construction 11-24-72

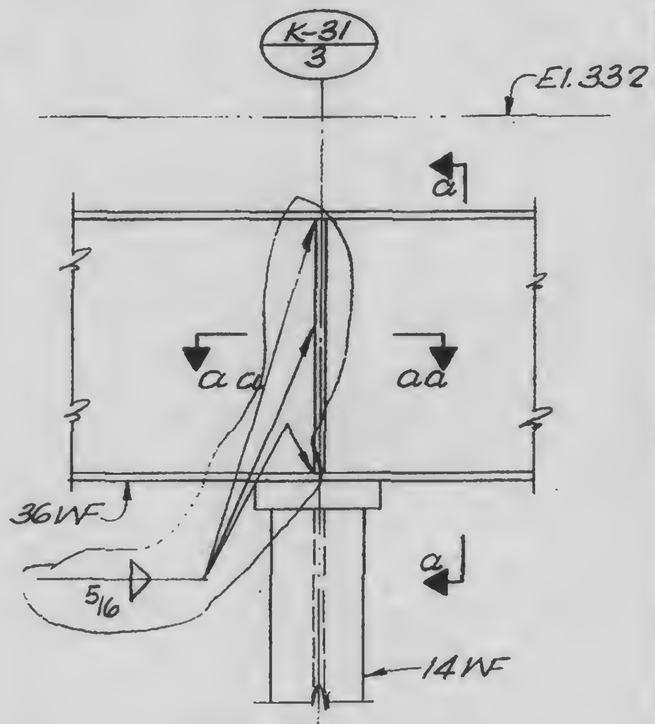

A

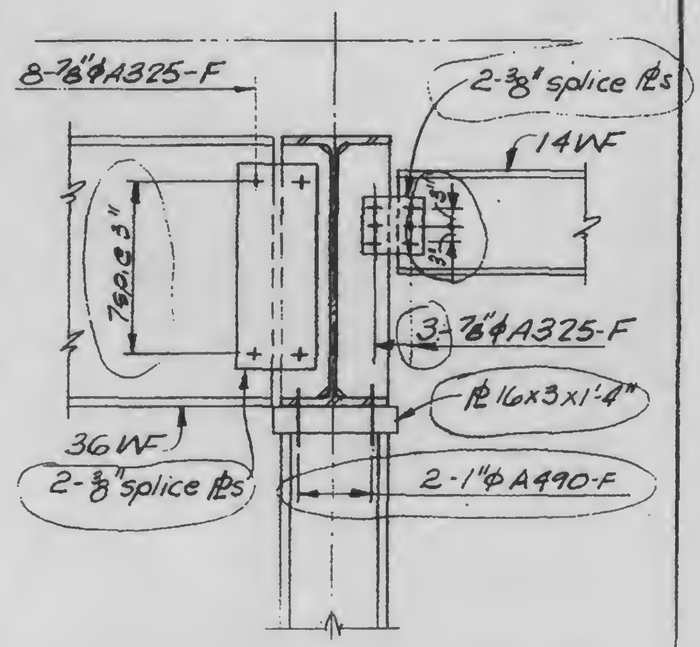

a

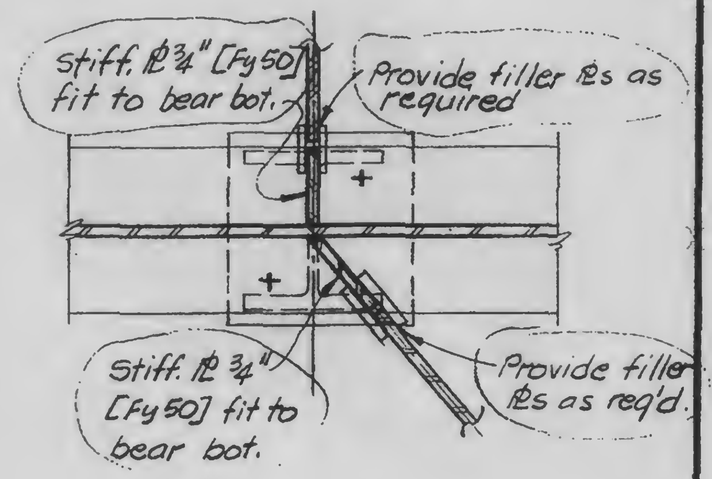

a-a

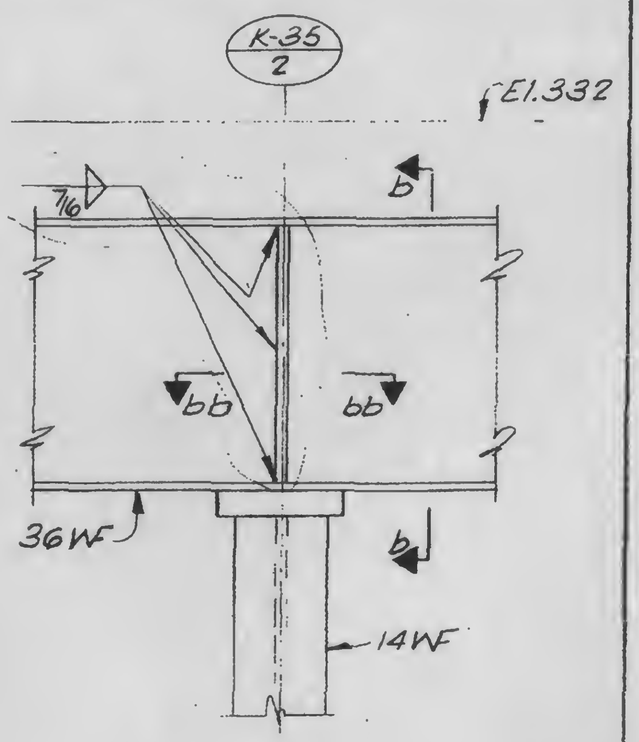

B

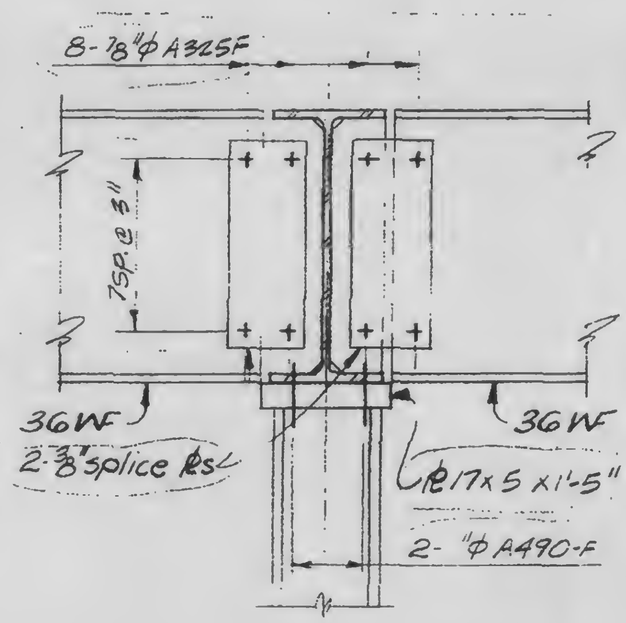

b

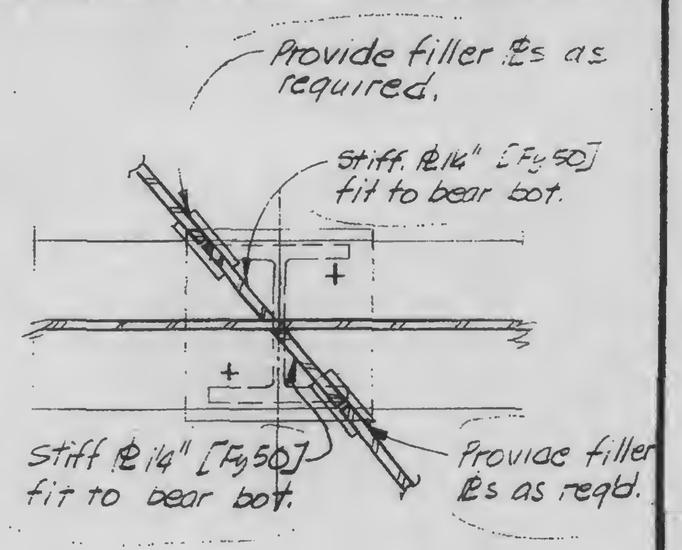

b-b

B

LICENSED PROFESSIONAL ENGINEER — LESLIE E. ROBERTSON — No. 34360 — UNIVERSITY OF THE STATE OF NEW YORK

DESIGNED: WAB

DRAWN: TR

REVIEWED:

13-K5.1-1

SKILLING, HELLE, CHRISTIANSEN, ROBERTSON — Structural & Civil Engineers

PROJECT: THE WORLD TRADE CENTER

TITLE: CONNECTIONS AT COLUMN

DATE: 11-3-72

REVISIONS

Released for construction 11-24-72

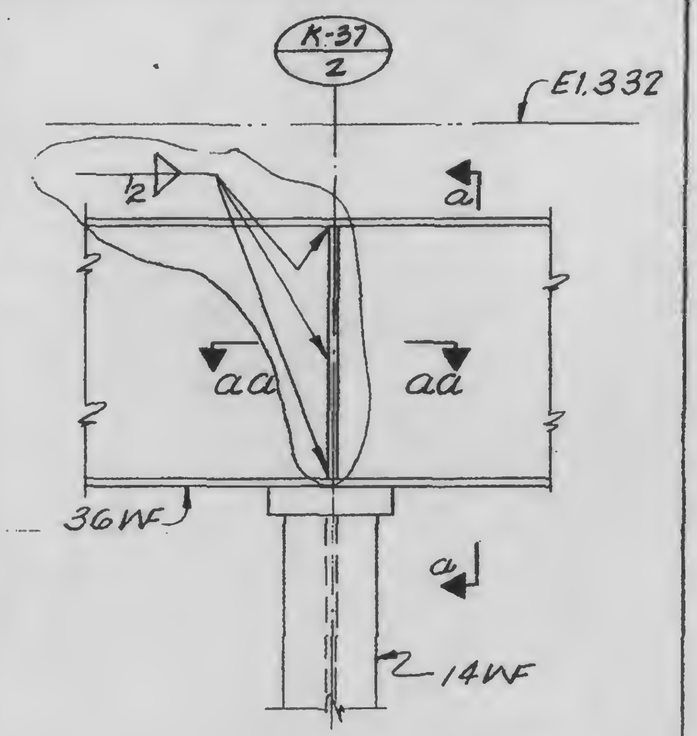

A

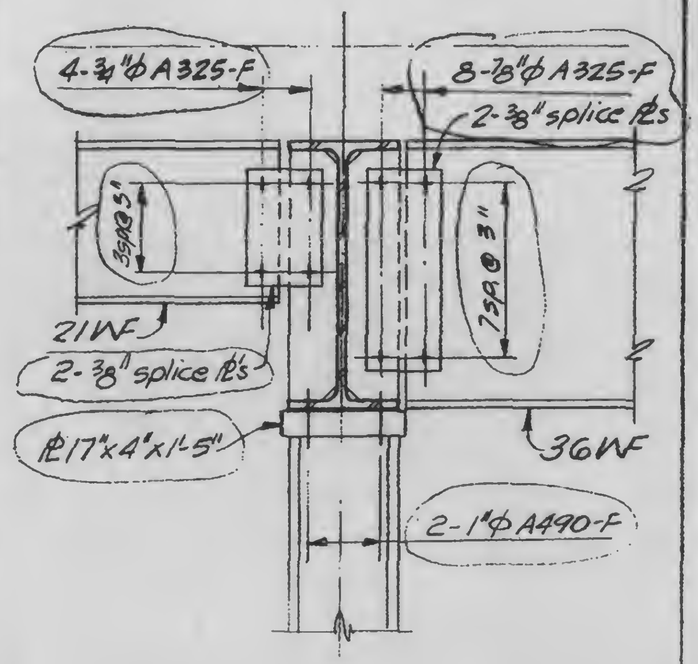

a

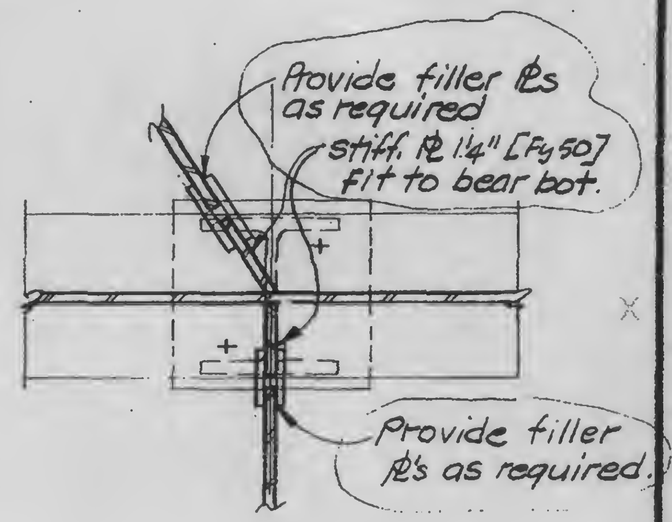

aa

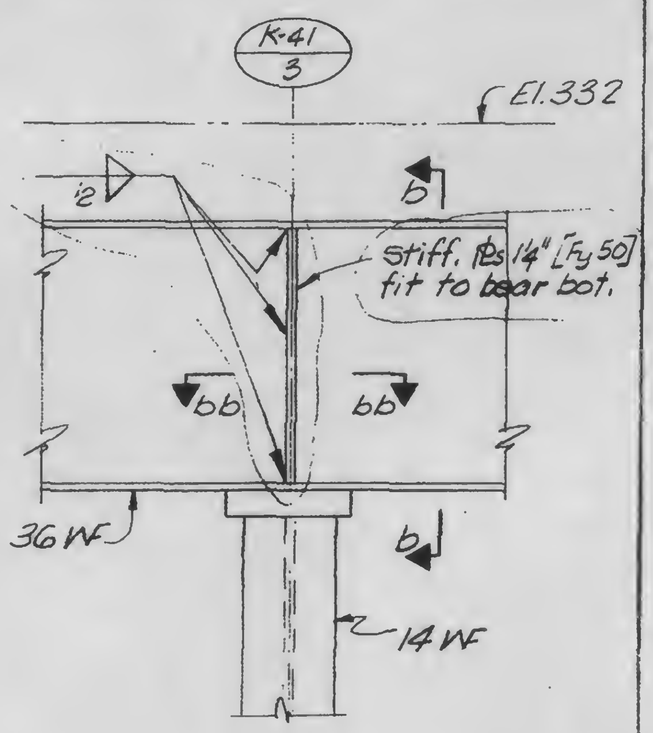

B

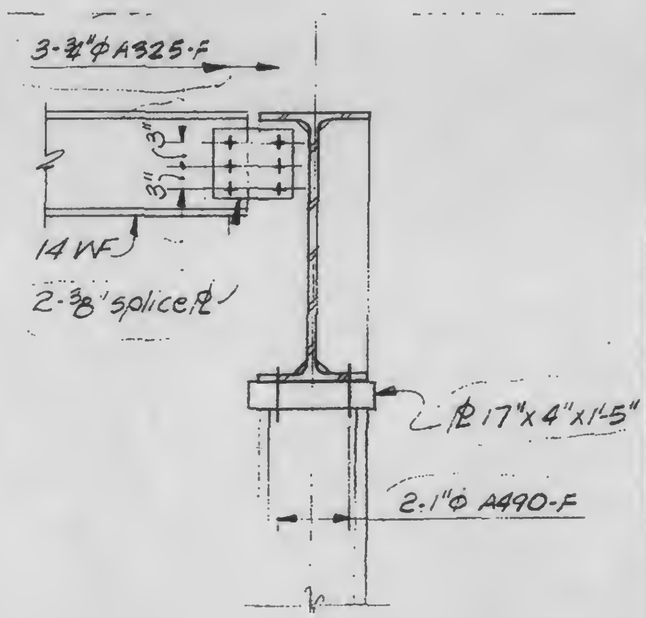

b

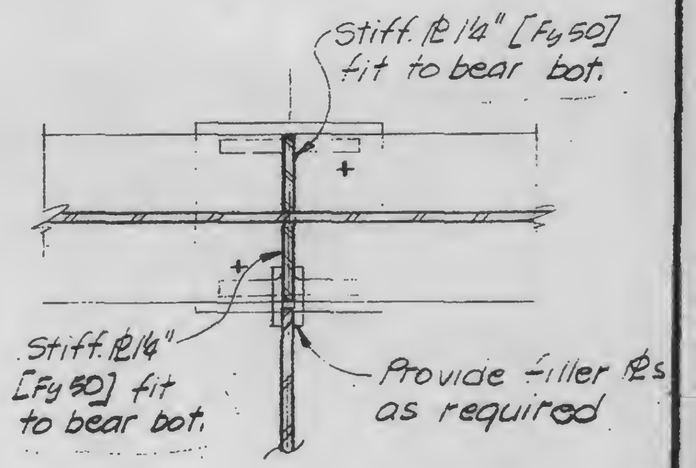

bb

13-K5.1-2

LICENSED PROFESSIONAL ENGINEER — LESLIE E. ROBERTSON — No. 34360 — UNIVERSITY OF THE STATE OF NEW YORK

DESIGNED: WAB

DRAWN: TR

REVIEWED:

SKILLING, HELLE, CHRISTIANSEN, ROBERTSON — Structural & Civil Engineers

PROJECT	TITLE	DATE
THE WORLD TRADE CENTER	CONNECTION DETAIL AT CANTILEVER	11-3-72

REVISIONS

Released for construction 11-24-72

4-20-73

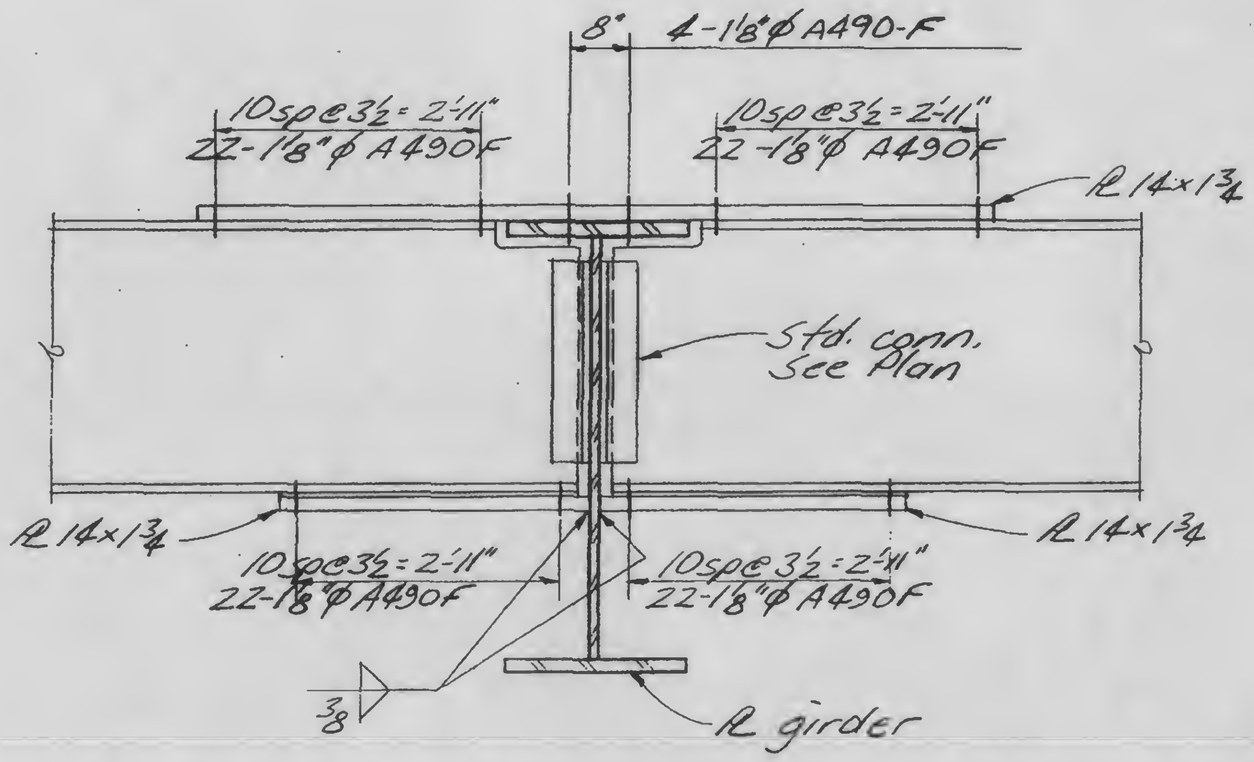

A

B

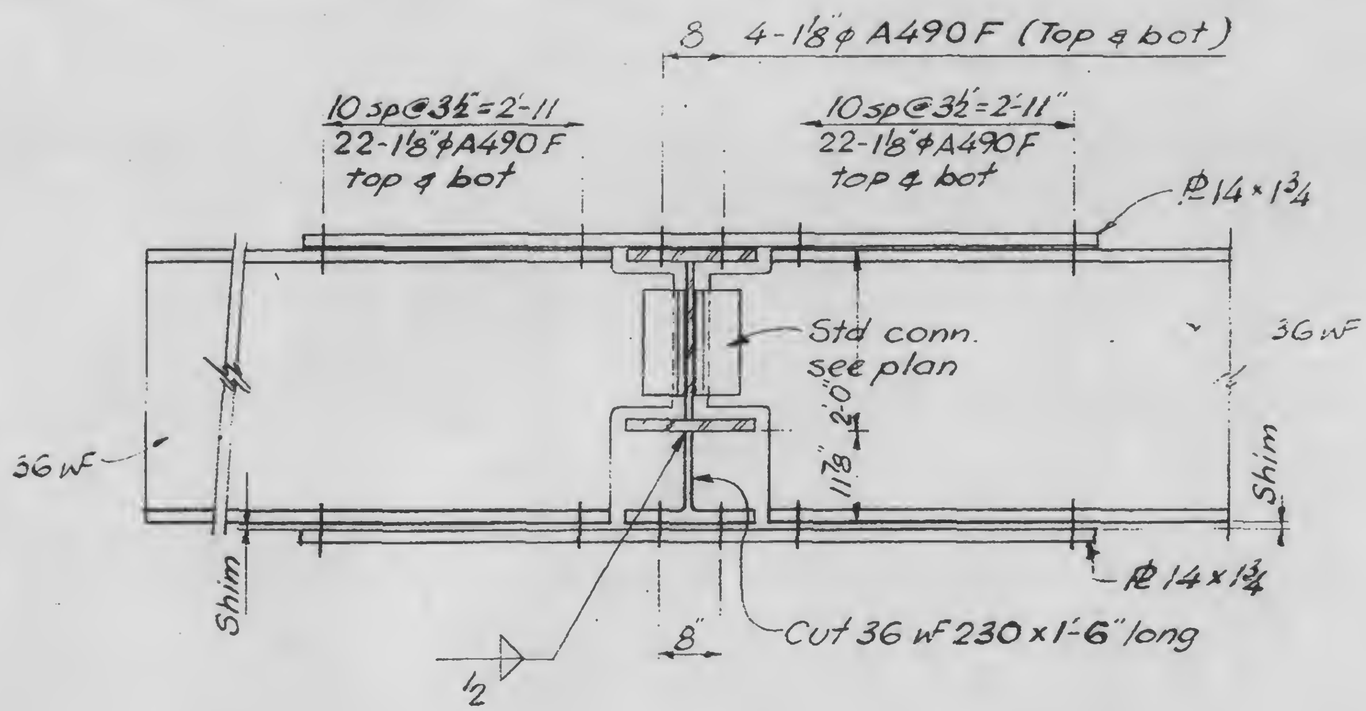

LICENSED PROFESSIONAL ENGINEER — LESLIE E. ROBERTSON — No. 34360 — UNIVERSITY OF THE STATE OF NEW YORK

DESIGNED: K. Chiang

DRAWN

REVIEWED

13-K5.2-1

SCALE

REVISIONS

Released for construction 1-24-72

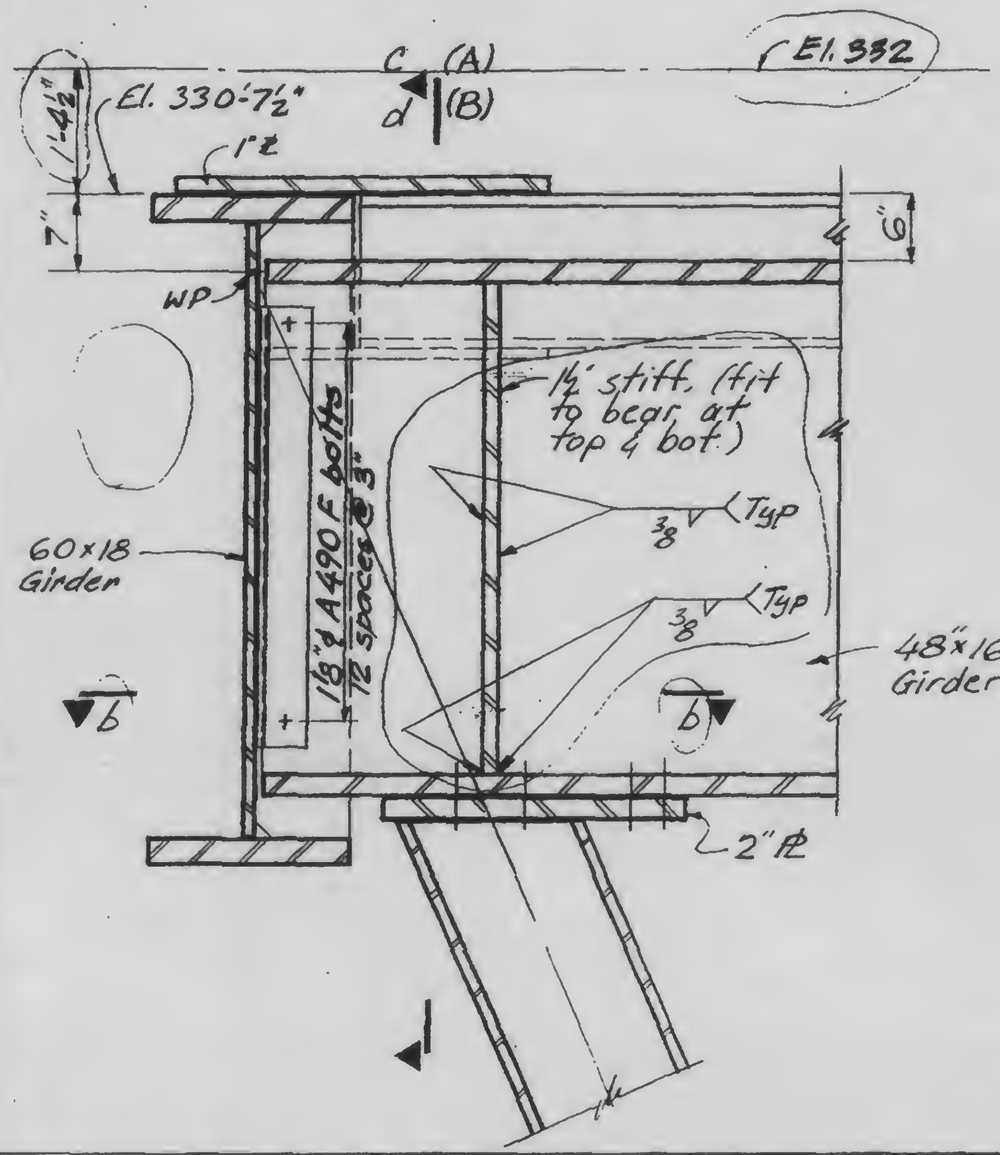

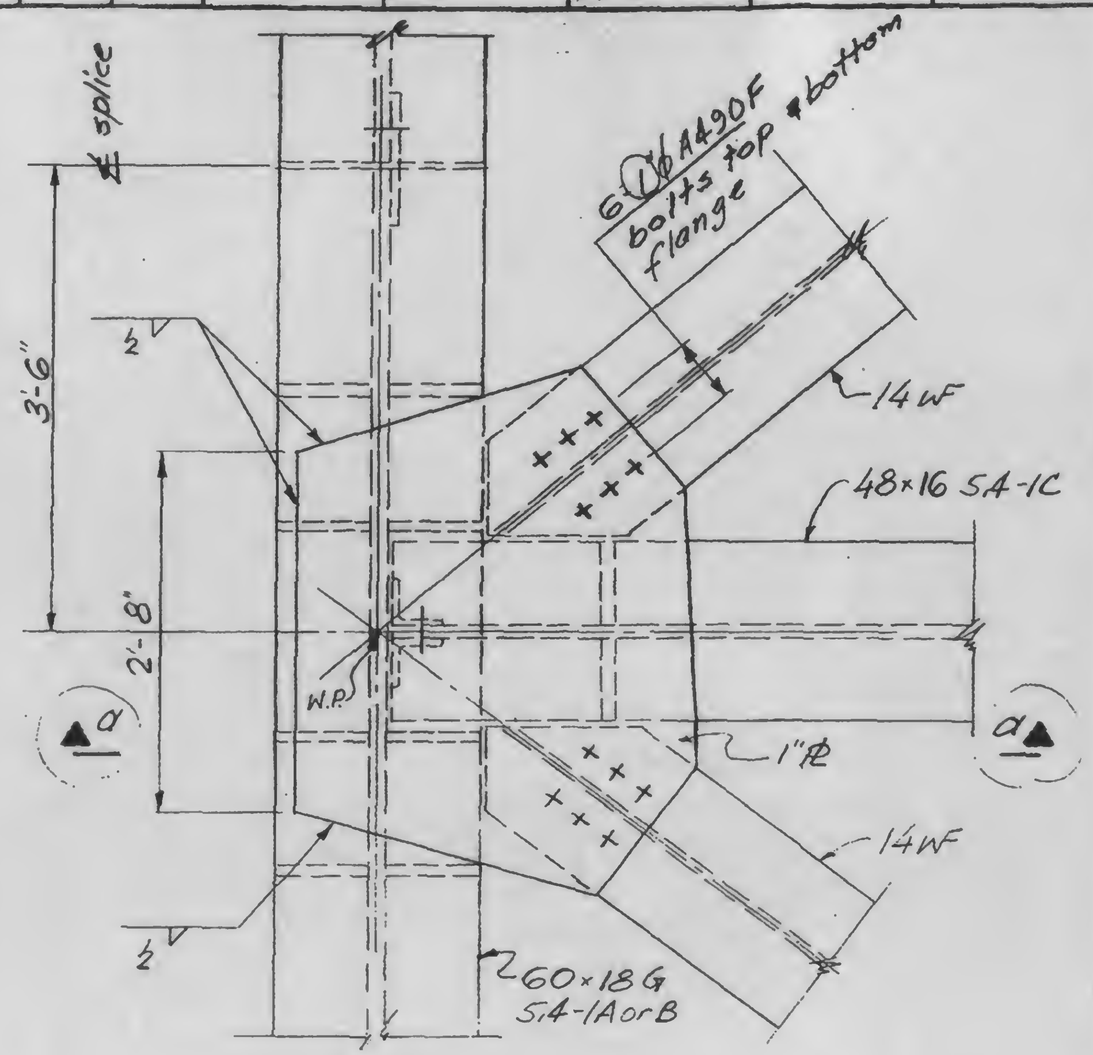

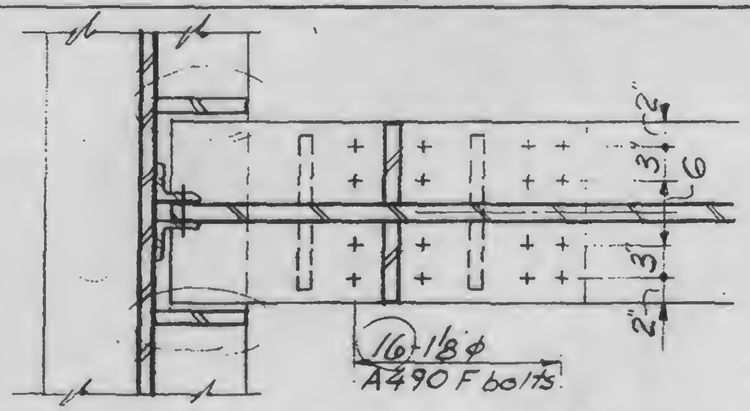

2

b

A

B

DESIGNED	PROJECT THE WORLD TRADE CENTER	TITLE CONNECTION DETAILS AT CANOPY	DATE 11-3-72
DRAWN JG	SKILLING, HELLE, CHRISTIANSEN, ROBERTSON	Structural & Civil Engineers	DWG NO 13-K5.3-1.1
REVIEWED			

SCALE

REVISIONS

Released for construction 11-24-72

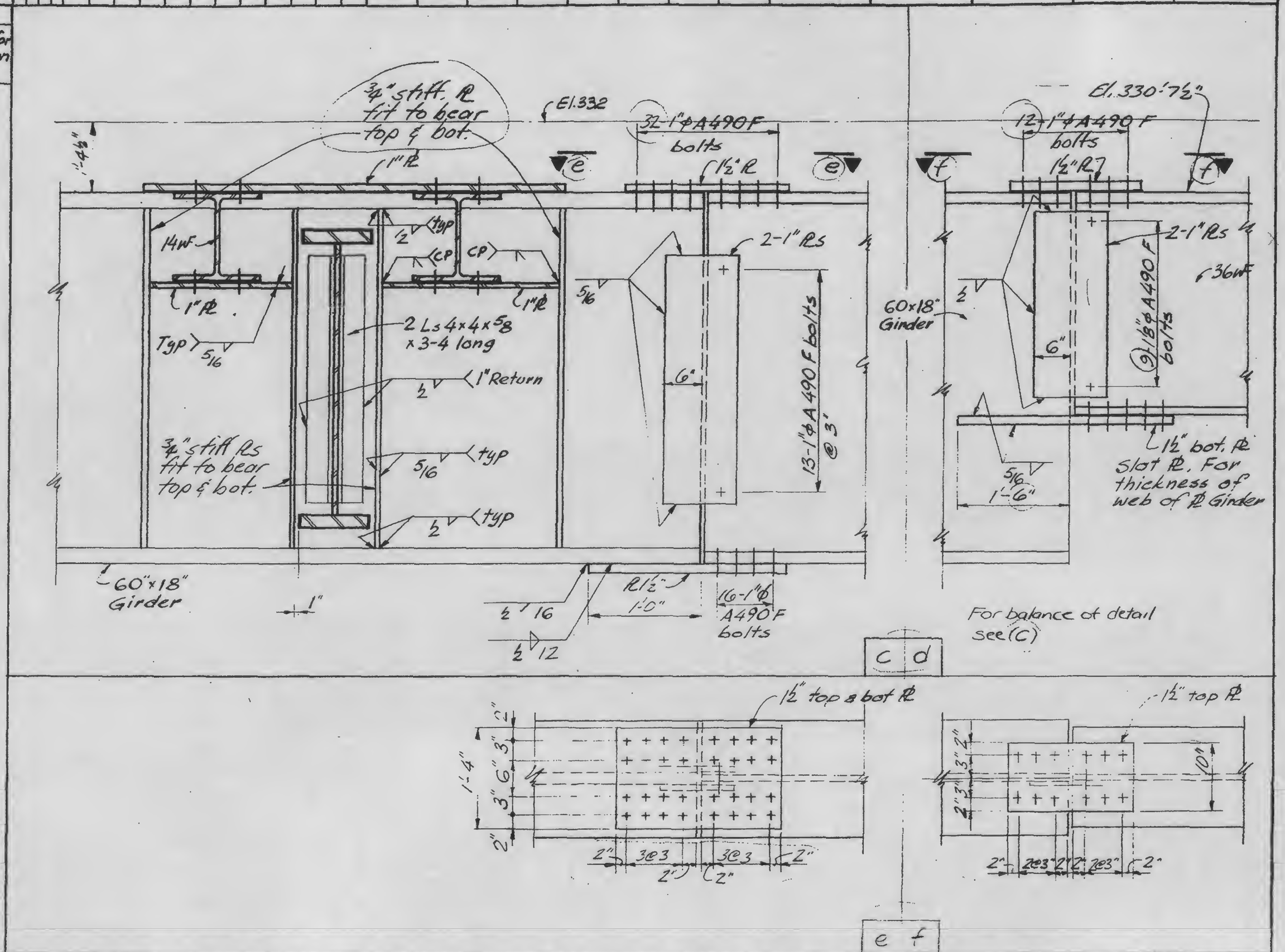

PROJECT THE WORLD TRADE CENTER

TITLE CONNECTION DETAILS AT CANOPY

DATE 11-3-72

DRAWN JG

DWG NO. 13-K5.3-1.2

SKILLING, HELLE, CHRISTIANSEN, ROBERTSON

Structural & Civil Engineers

SHILLING
[illegible]
[illegible] LEVINSON
Structural & Civil Engineers

PROJECT WTC 220.00

Repair Detail, Modification of Channels to Clear Exist. Beam

DAT. 8 February [illegible] No.

PREPARED BY

APPROVED

REVISIO

1. Refer to Drawing 13-K5.3-1.3 for details not shown.
2. Refer to Levinson Shop Drawing No. V3231

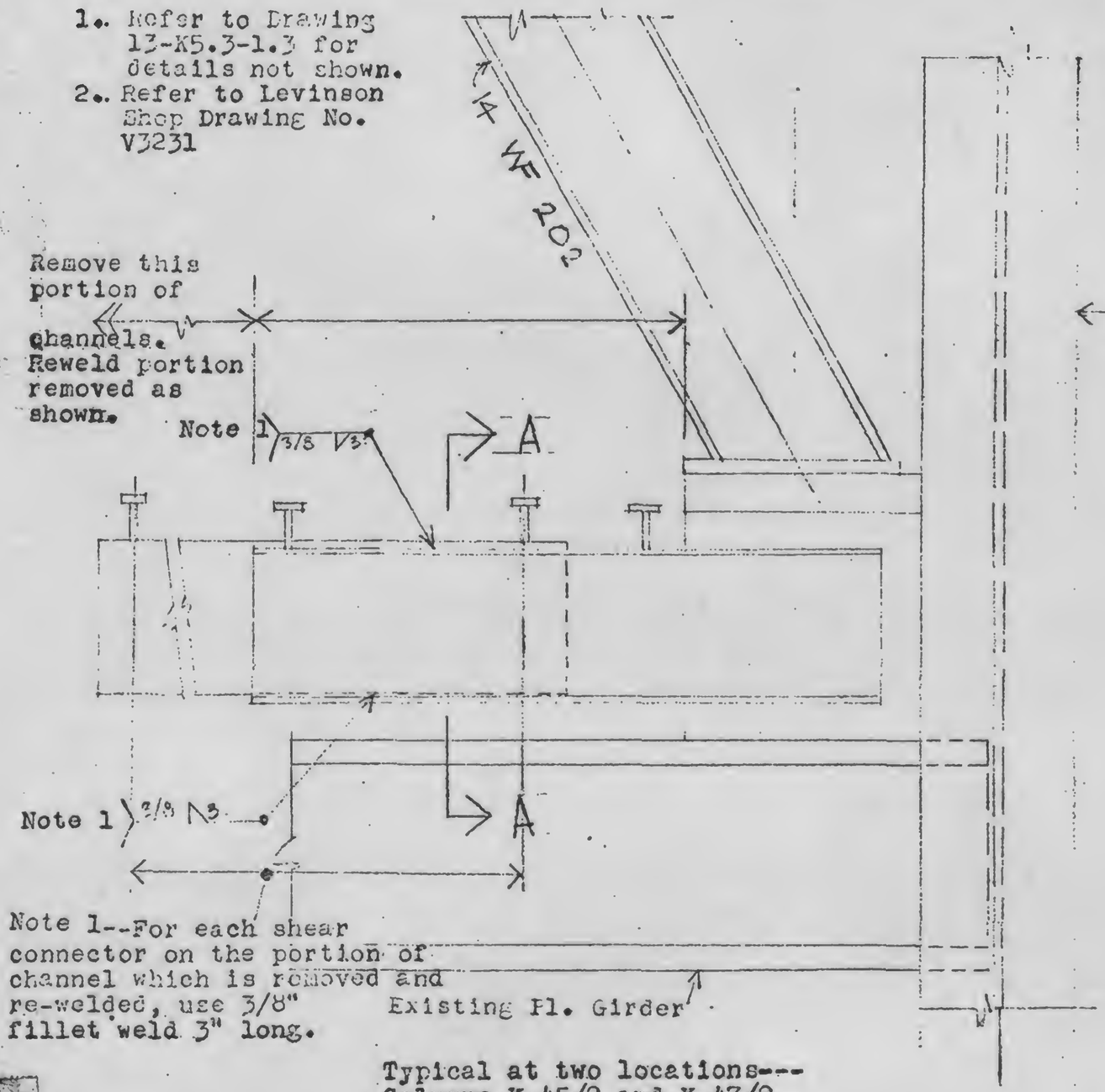

Typical at two locations---
Columns K-45/2 and K-47/2

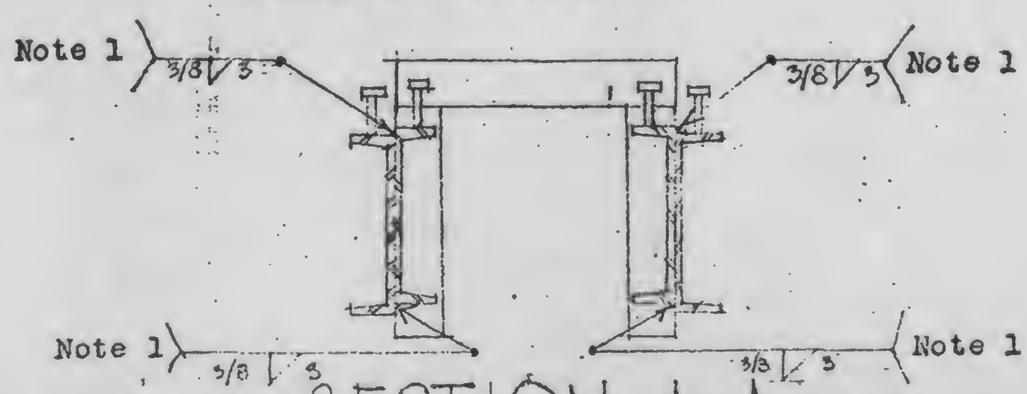

SECTION A-A

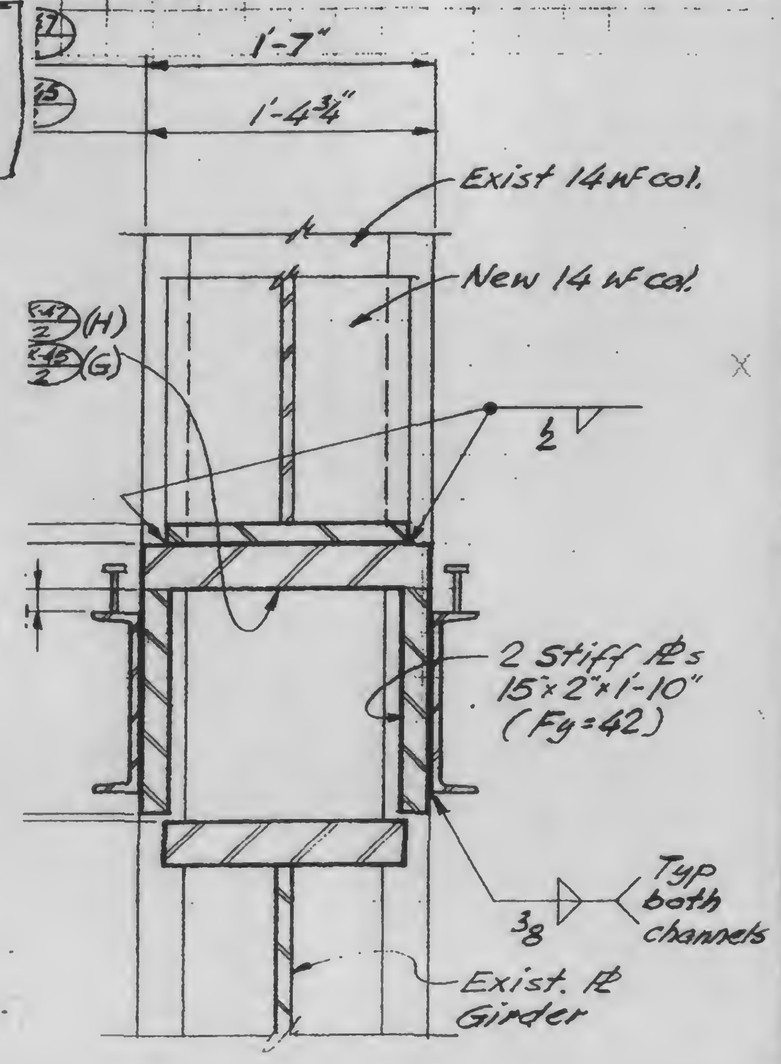

ngineers
T CANOPY
DATE 2-5-73

13-K5.3-1.3

LICENSED PROFESSIONAL ENGINEER
LESLIE E. ROB[illegible]
No. 34[illegible]
UNIVERSITY OF THE ST[illegible]

DESIGNED
DRAWN
REVIEWED

SCALE

REVISIONS

Released for construction 11-24-72

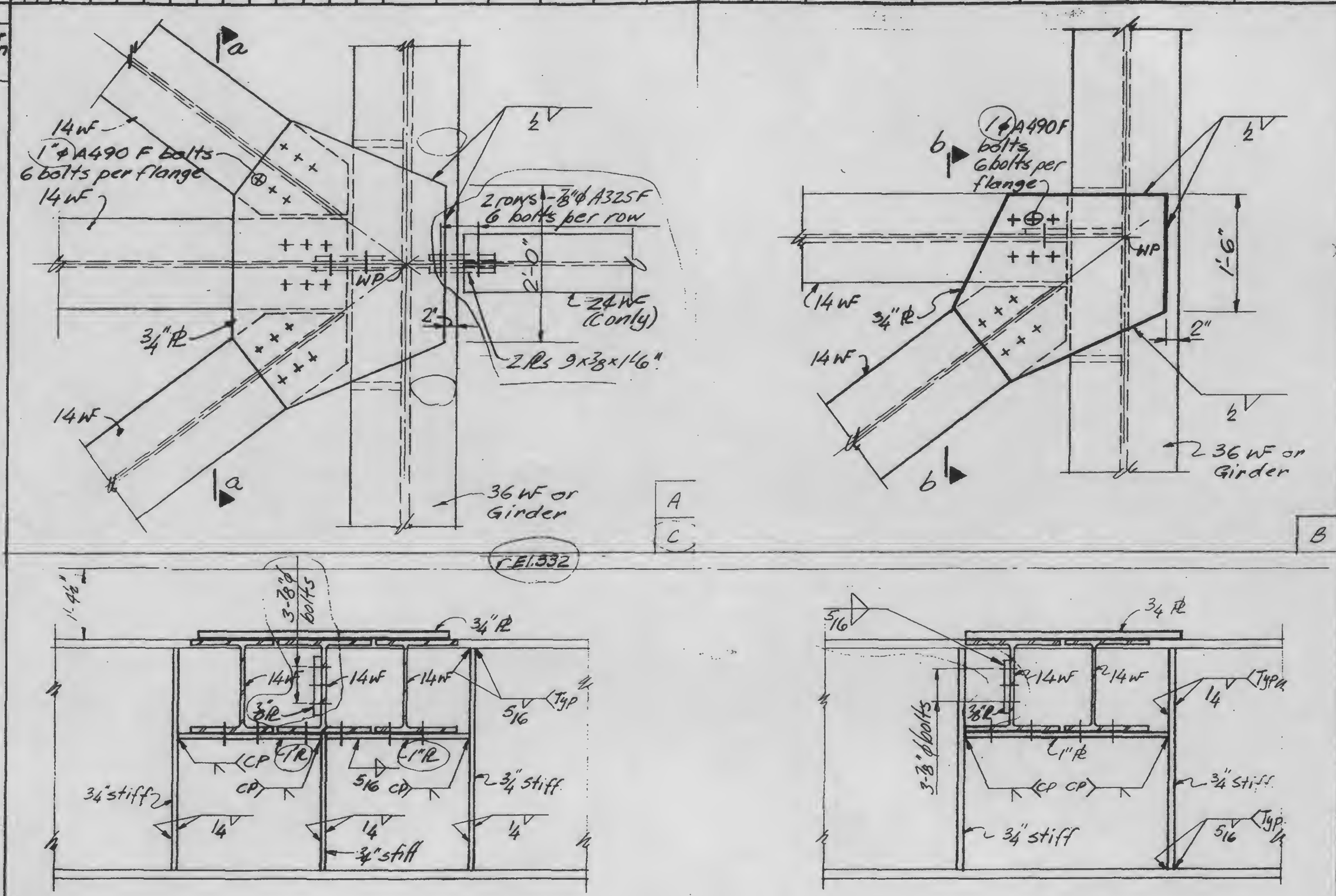

LICENSED PROFESSIONAL ENGINEER LESLIE E. ROBERTSON No 34360 UNIVERSITY OF THE STATE OF NEW YORK

DESIGNED	PROJECT THE WORLD TRADE CENTER	TITLE CONNECTION DETAILS AT CANOPY	DATE 11-3-72
DRAWN JG	SKILLING, HELLE, CHRISTIANSEN, ROBERTSON	Structural & Civil Engineers	DWG. NO. 13-K5.3-2
REVIEWED			

SKILLING, HELLE, CHRISTIANSEN, ROBERTSON — Structural & Civil Engineers

PROJECT: THE WORLD TRADE CENTER

TITLE: CONNECTION DETAILS AT CANOPY

DATE: 11-24-72

REVISIONS

Released for construction 11-24-72

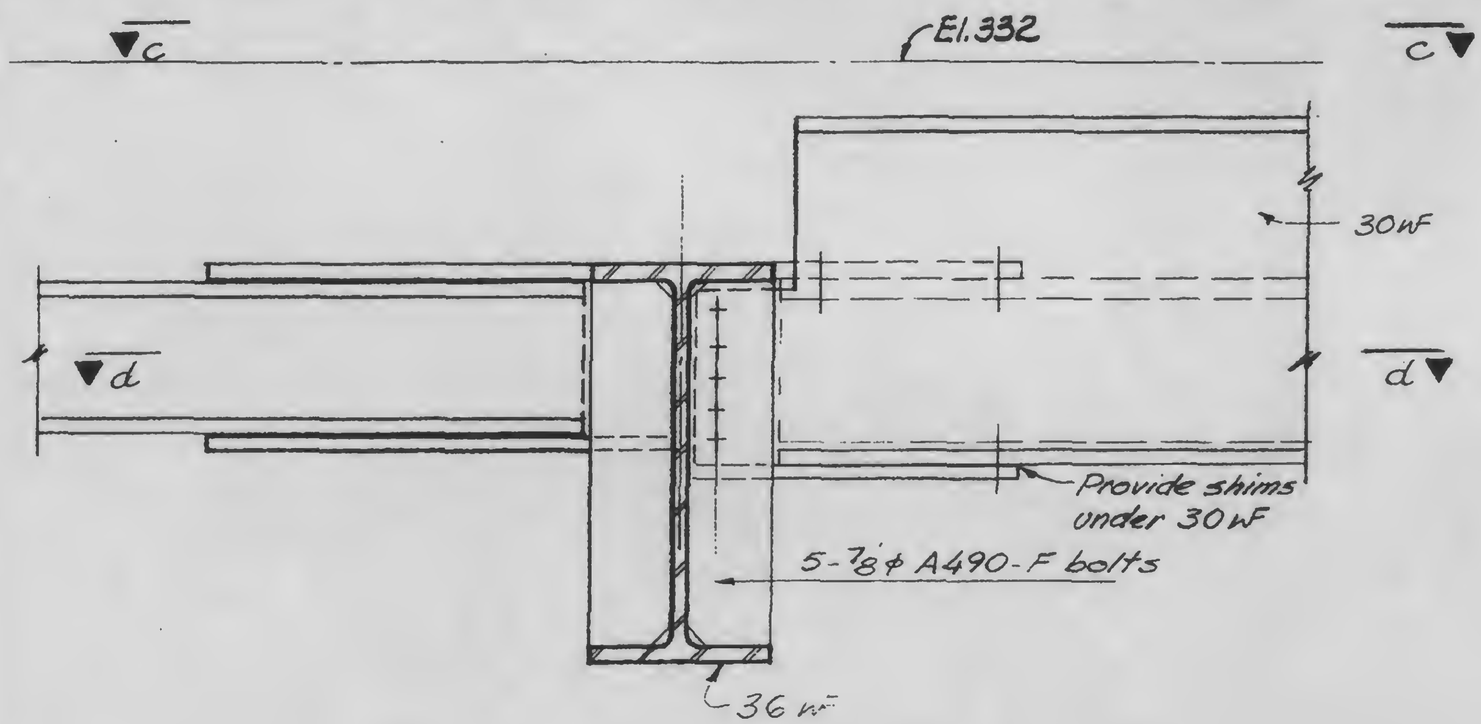

a

LICENSED PROFESSIONAL ENGINEER
LESLIE E. ROBERTSON
No. 34360
UNIVERSITY OF THE STATE OF NEW YORK

DESIGNED

DRAWN

REVIEWED

13-K5.3-2.1

SKILLING, HELLE, CHRISTIANSEN, ROBERTSON

PROJECT THE WORLD TRADE CENTER | TITLE CONNECTION DETAIL AT CANOPY | DATE 11-24-72

REVISIONS

Released for construction 11-24-72

4-20-73

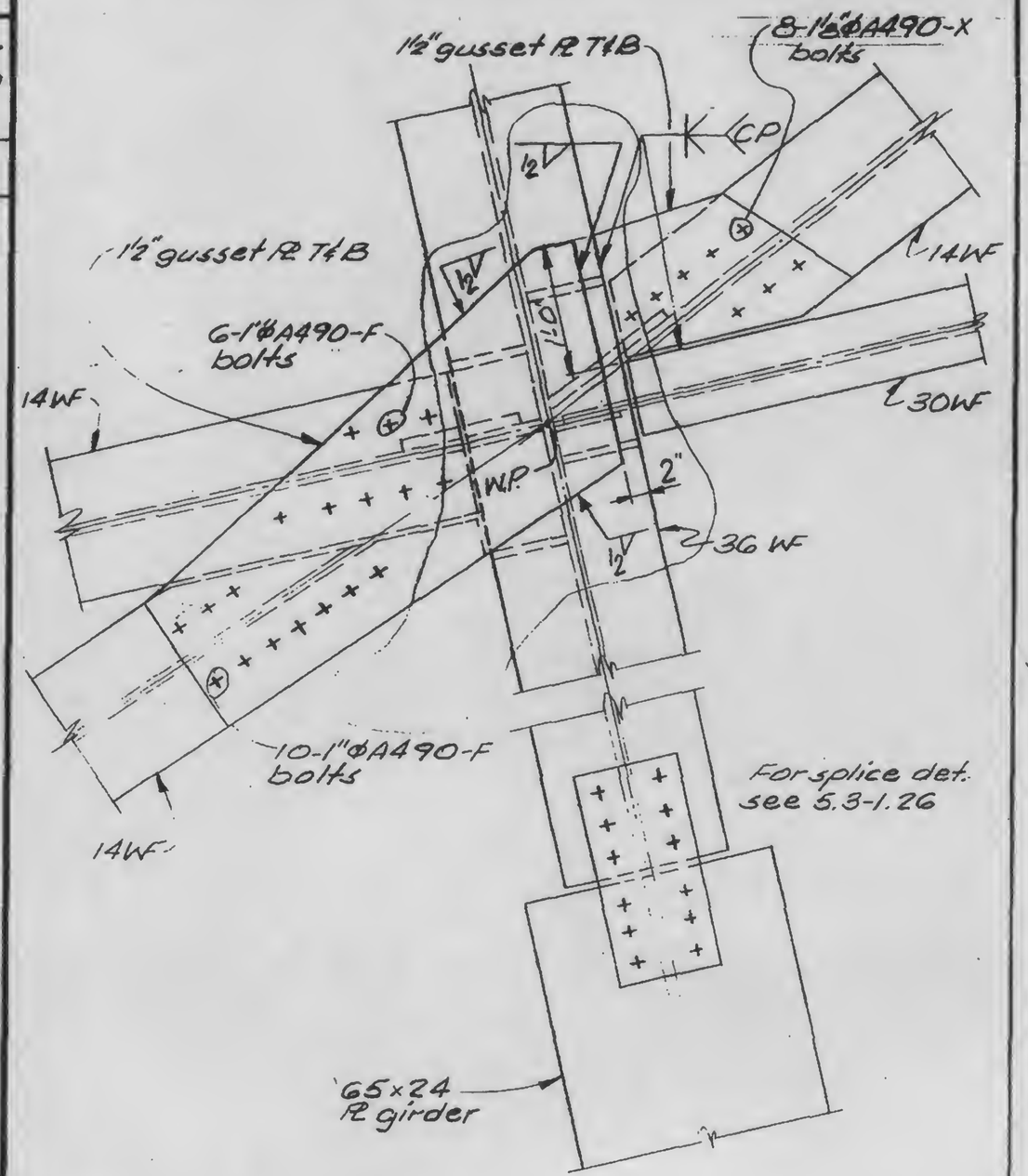

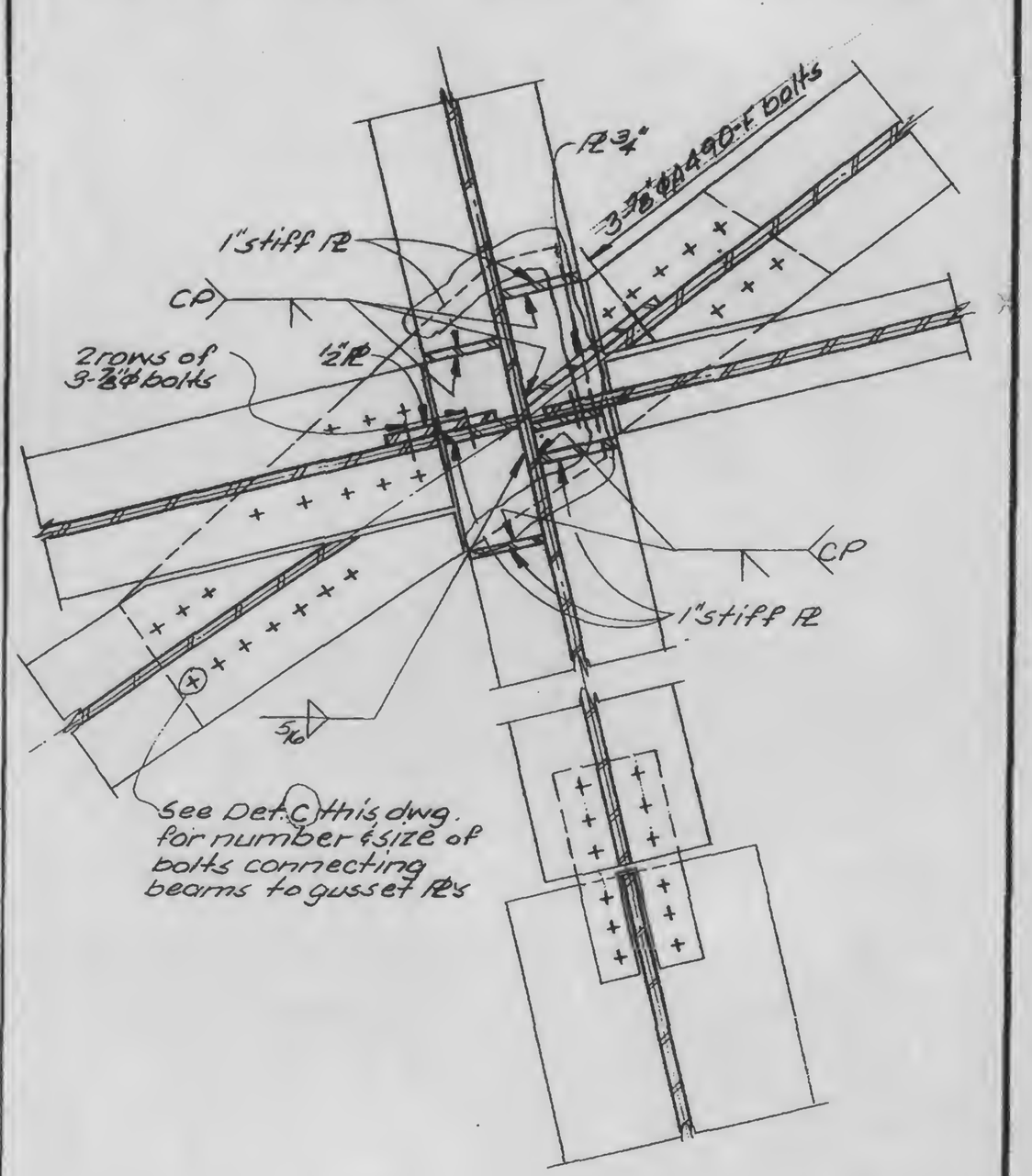

LICENSED PROFESSIONAL ENGINEER
LESLIE E. ROBERTSON
No. 34360
UNIVERSITY OF THE STATE OF NEW YORK

DESIGNED

DRAWN T.R.

REVIEWED

c | d

13-K5.3-3,2

SKILLING, HELLE, CHRISTIANSEN, ROBERTSON — Structural & Civil Engineers

PROJECT: THE WORLD TRADE CENTER

TITLE: CONNECTION DETAILS AT CANOPY

DATE: 11-24-72

REVISIONS

Released for construction 11-24-72

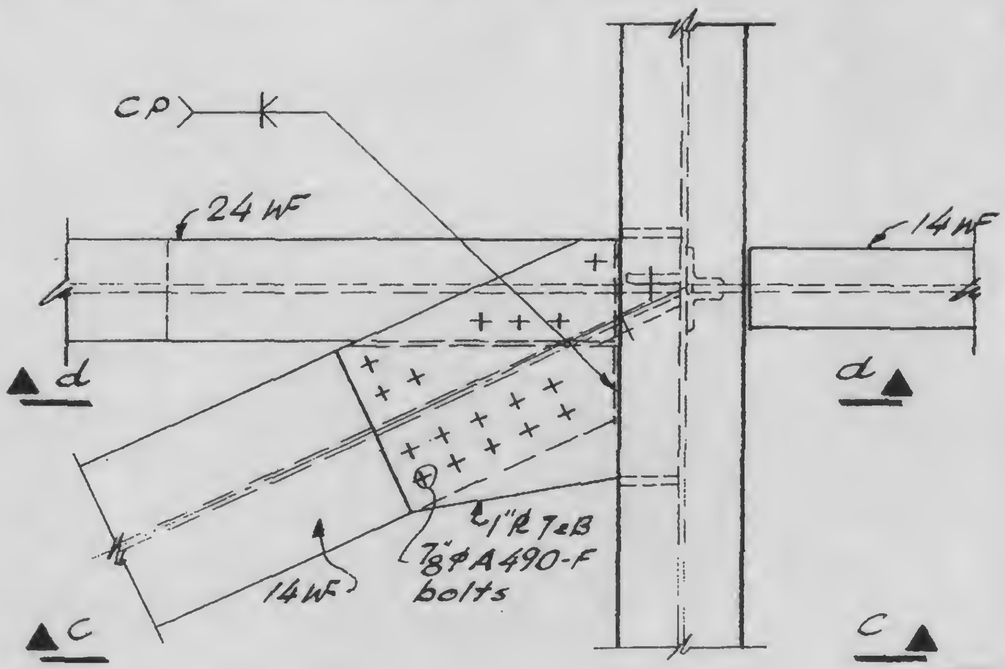

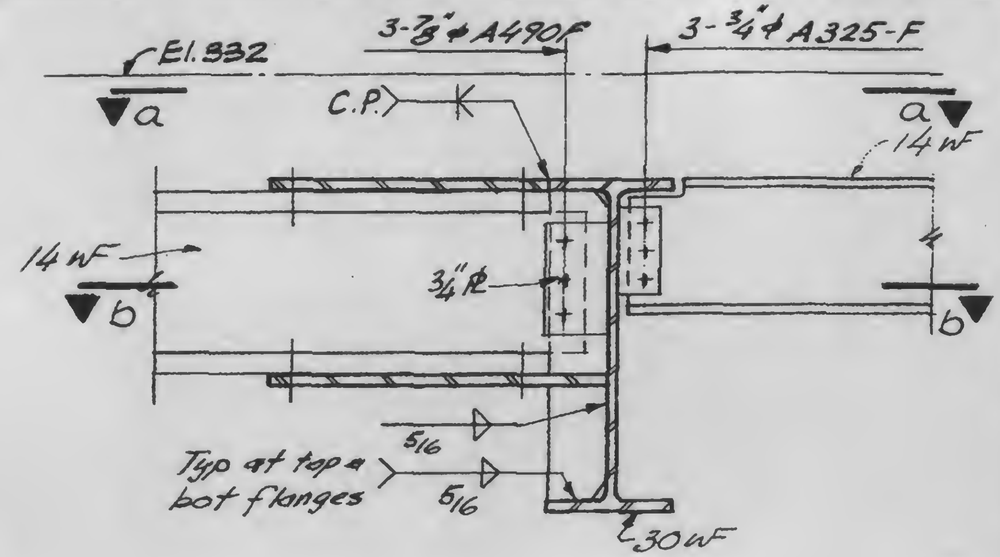

a | c

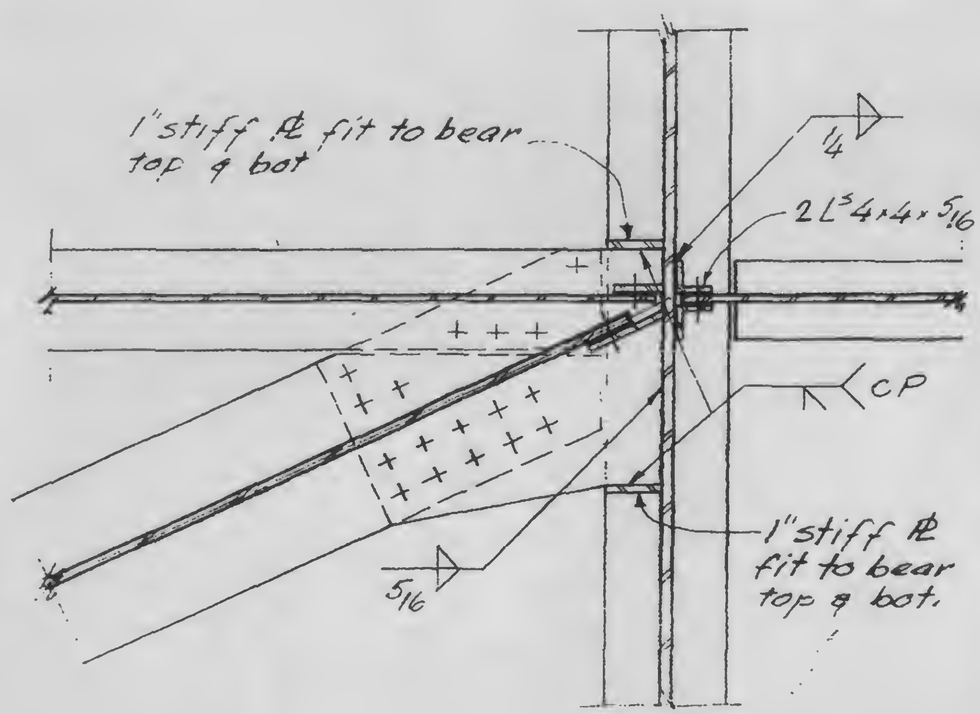

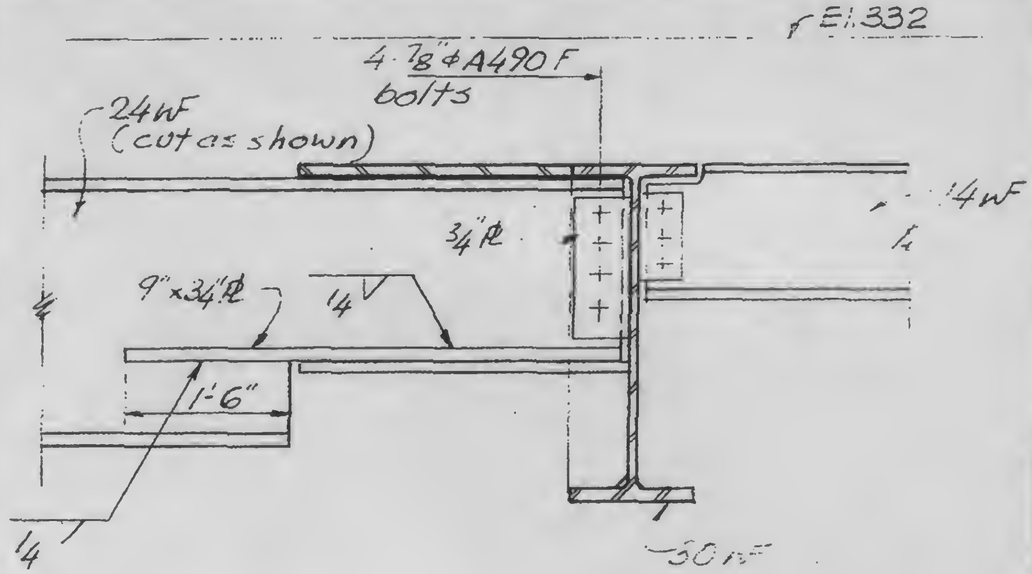

c | d

13-K5.3-4

LICENSED PROFESSIONAL ENGINEER — LESLIE E. ROBERTSON — No. 34360 — UNIVERSITY OF THE STATE OF NEW YORK

DESIGNED

DRAWN

REVIEWED

SKILLING, HELLE, CHRISTIANSEN, ROBERTSON — Structural & Civil

PROJECT: THE WORLD TRADE CENTER

TITLE: CONNECTION DETAILS AT CANOPY

DATE: 11-24-72

REVISIONS

Released for construction 11-24-72

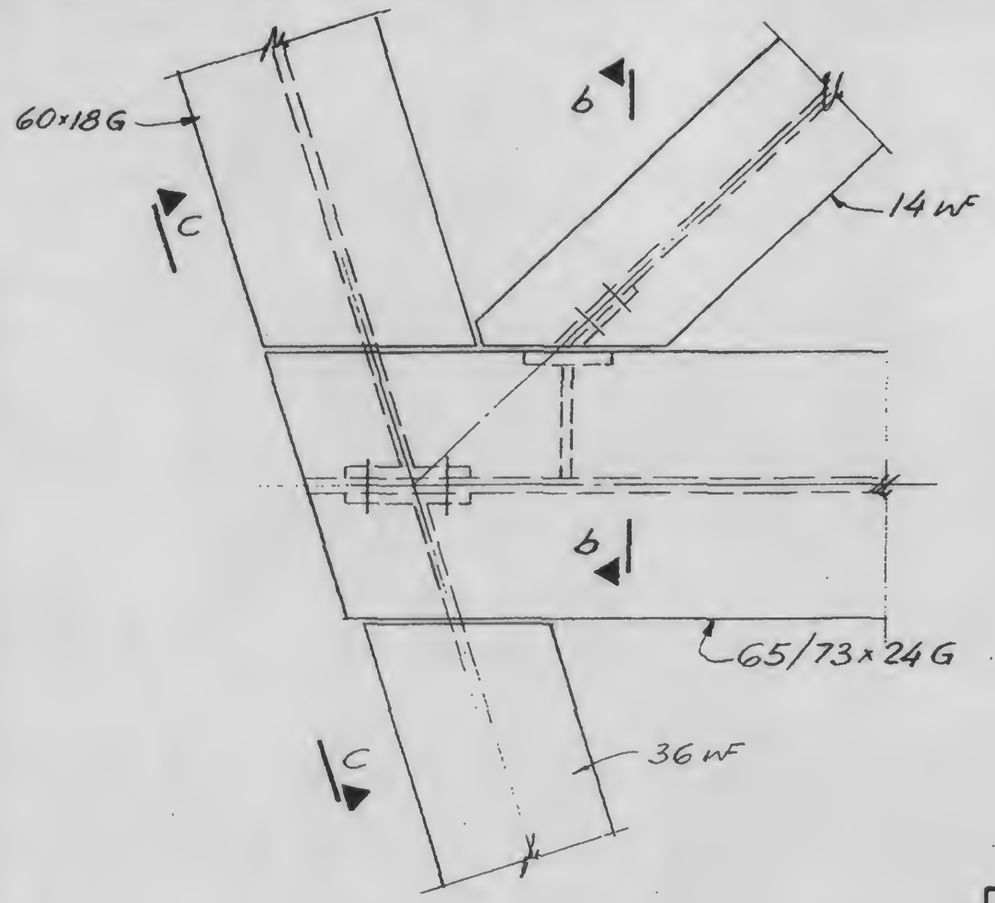

a

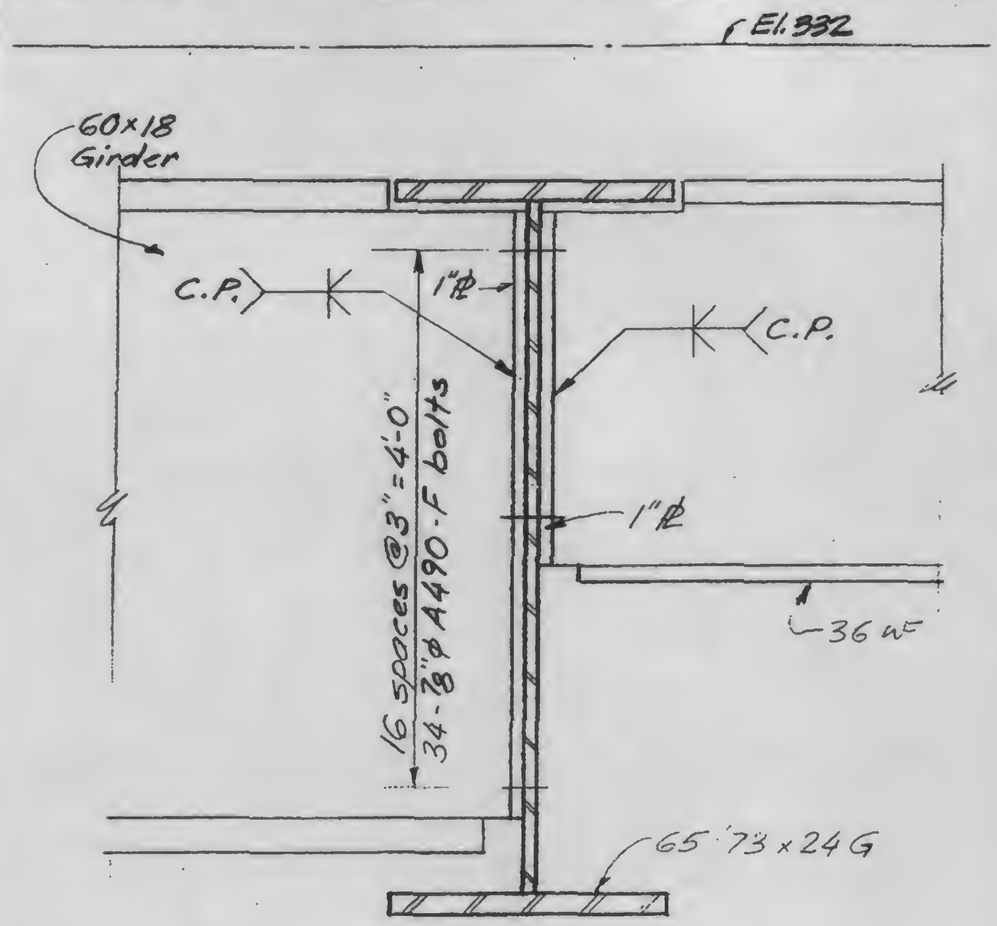

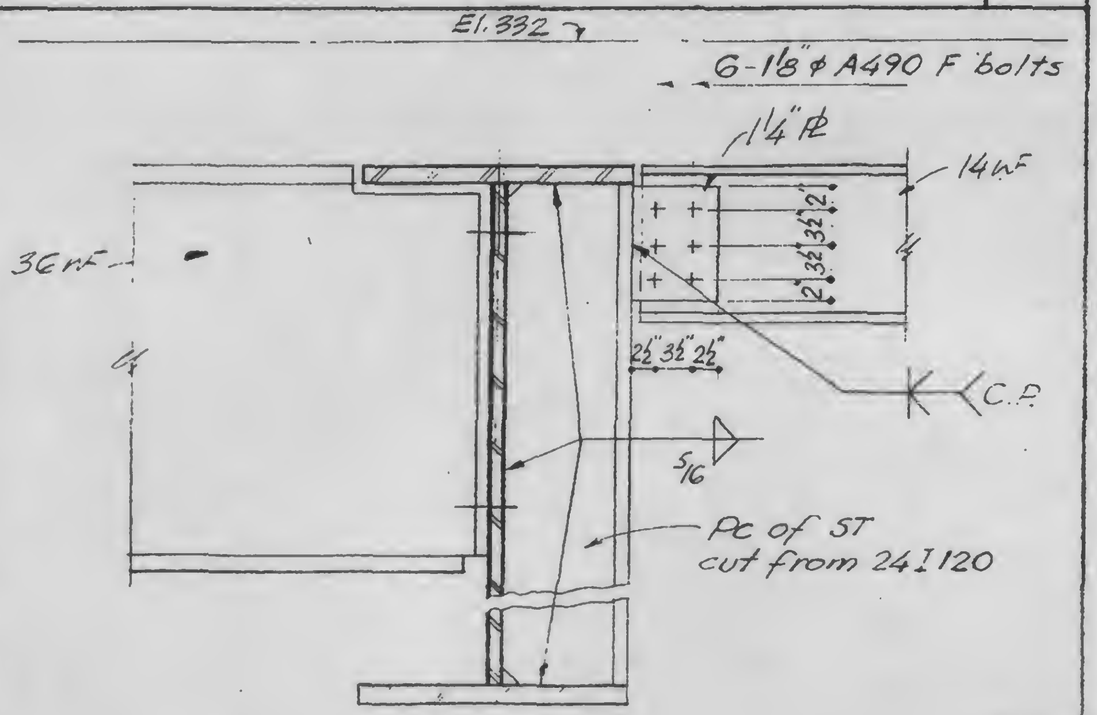

b

c

DESIGNED

DRAWN

REVIEWED

LICENSED PROFESSIONAL ENGINEER — LESLIE E. ROBERTSON — No. 34360 — UNIVERSITY OF THE STATE OF NEW YORK

13-K5.3-5

SKILLING, HELLE, CHRISTIANSEN, ROBERTSON — Structural & Civil Engineers

PROJECT: THE WORLD TRADE CENTER | TITLE: CONNECTION DETAILS AT CANOPY | DATE: 11-24-72

REVISIONS

Released for construction 11-24-72

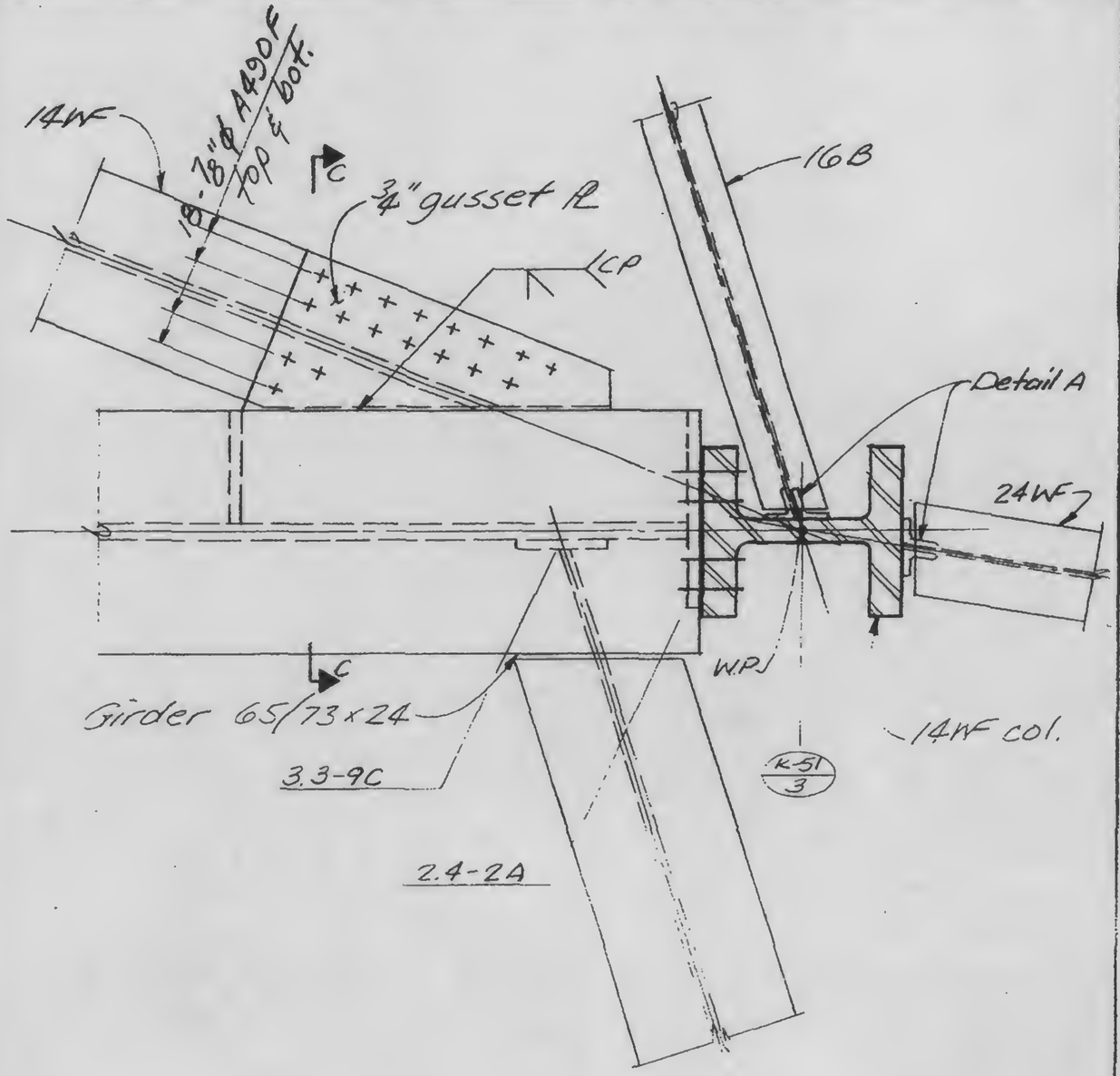

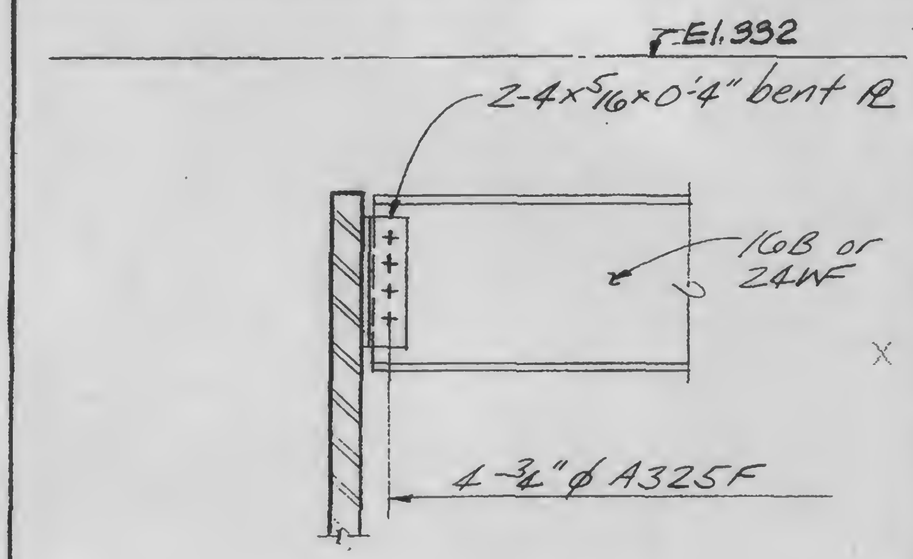

Detail A

b

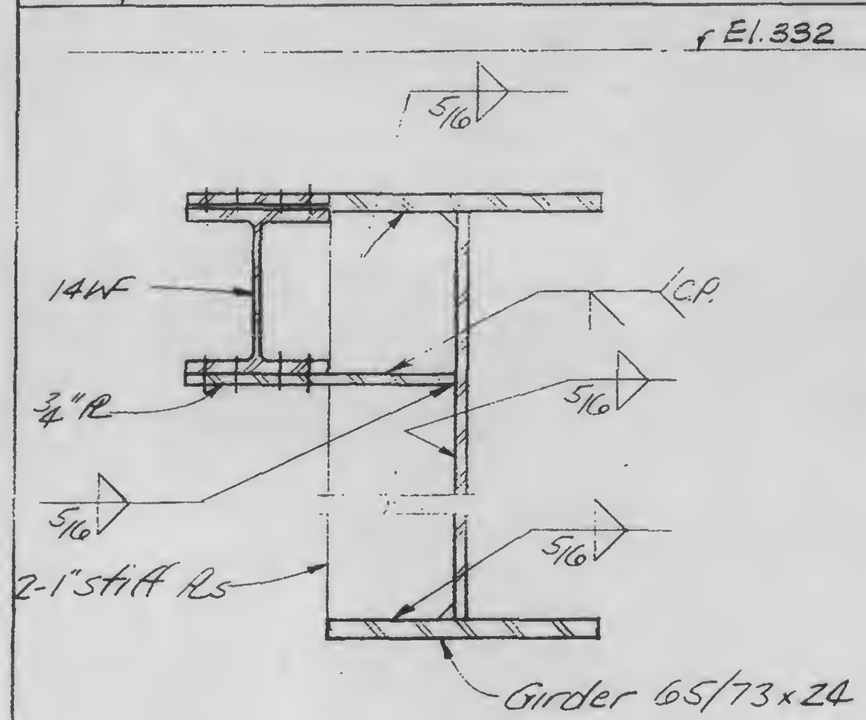

DESIGNED

DRAWN

REVIEWED

a | c

13-K5.3-6

SKILLING, HELLE, CHRISTIANSEN, ROBERTSON — Structural & Civil Engineers

PROJECT: THE WORLD TRADE CENTER

TITLE: CONNECTION DETAILS AT CANOPY

DATE: 11-24-72

REVISIONS

Released for construction 11-24-72

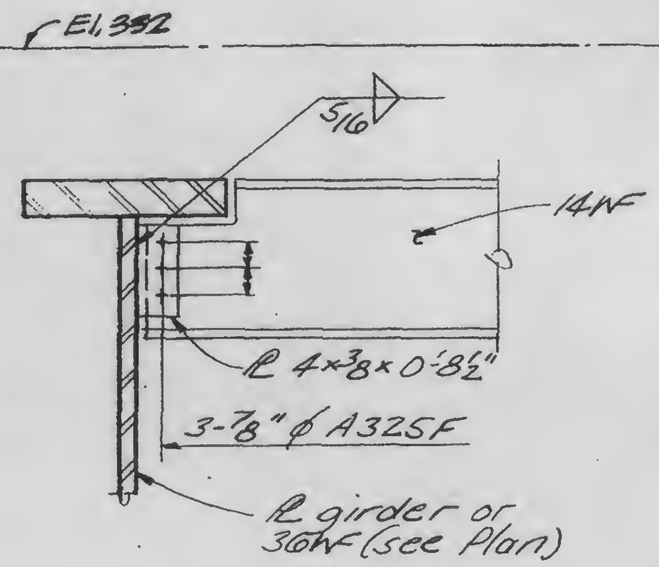

A

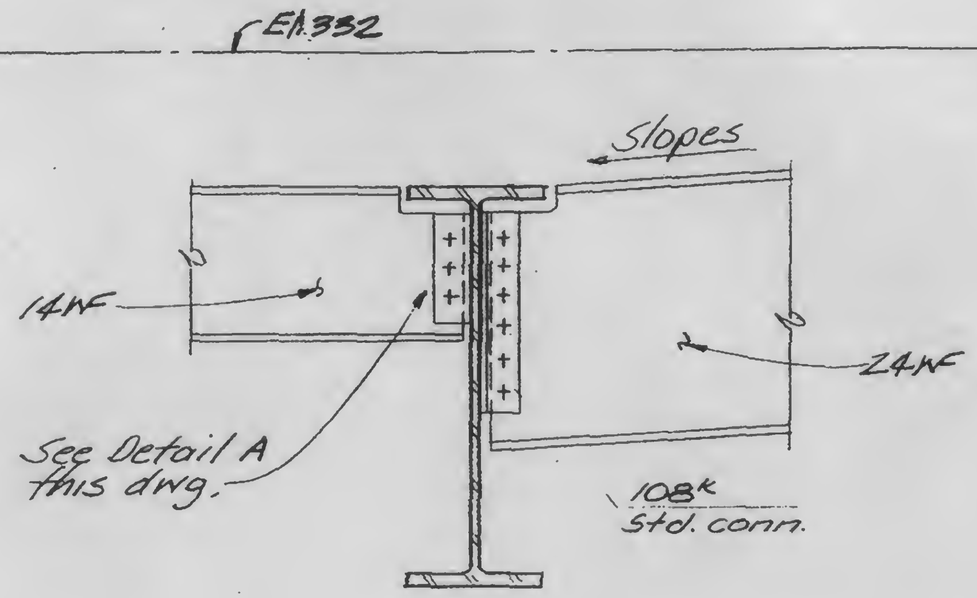

B

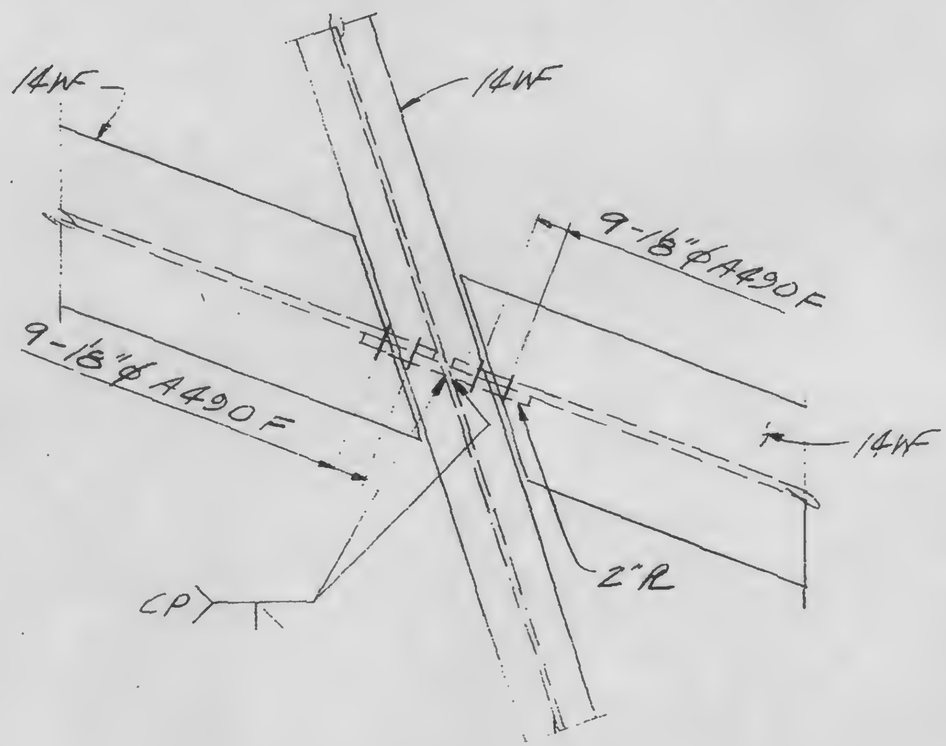

C

LICENSED PROFESSIONAL ENGINEER — LESLIE E. ROBERTSON — No 34360 — UNIVERSITY OF THE STATE OF NEW YORK

DESIGNED

DRAWN

REVIEWED

13-K5.3-7

SKILLING, HELLE, CHRISTIANSEN, ROBERTSON — Structural & Civil Engineers

PROJECT: THE WORLD TRADE CENTER | TITLE: GIRDER DETAILS AT CANOPY | DATE: 11-3-72

REVISIONS

Released for construction 11-24-72

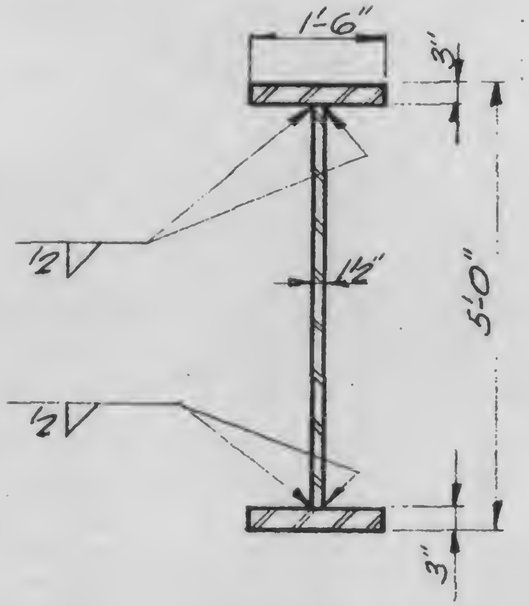

A

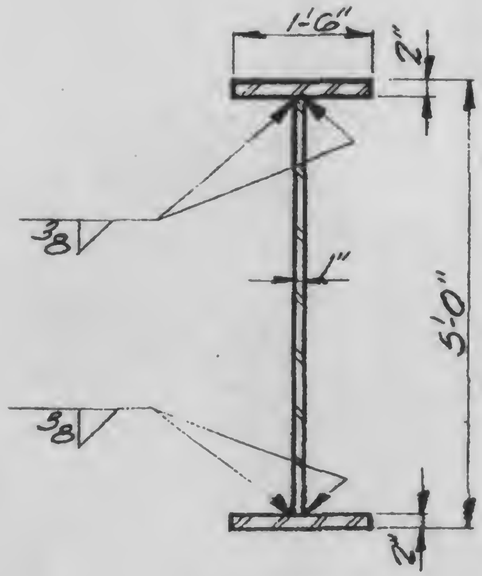

B

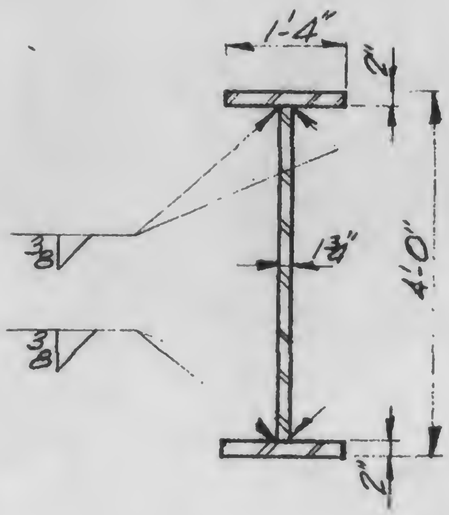

5.4-1

C

LICENSED PROFESSIONAL ENGINEER
LESLIE E. ROBERTSON
No. 34360
UNIVERSITY OF THE STATE OF NEW YORK

DESIGNED

DRAWN TR

REVIEWED

13-K5.4-1

SKILLING, HELLE, CHRISTIANSEN, ROBERTSON — Structural & Civil Engineers

PROJECT: THE WORLD TRADE CENTER

TITLE: CONNECTIONS FOR FUTURE CONOPY

DATE: 11-3-72

REVISIONS

Released for construction 11-24-72

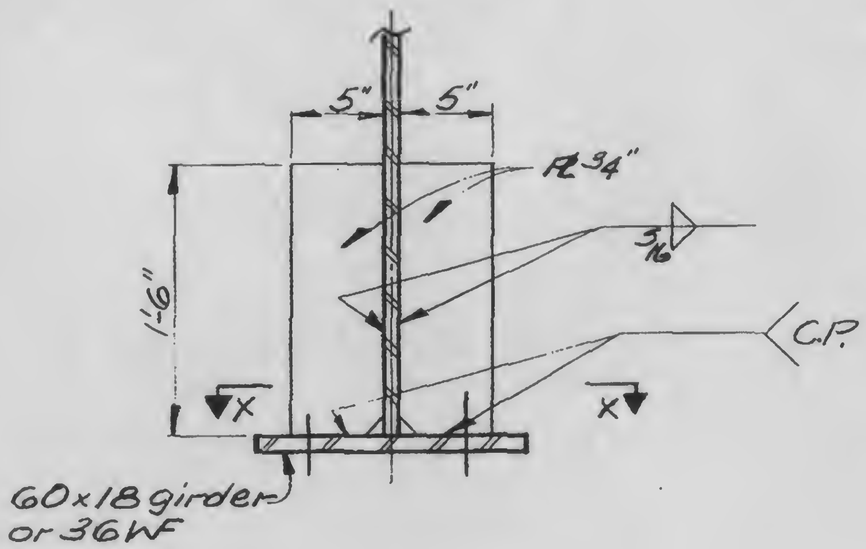

A

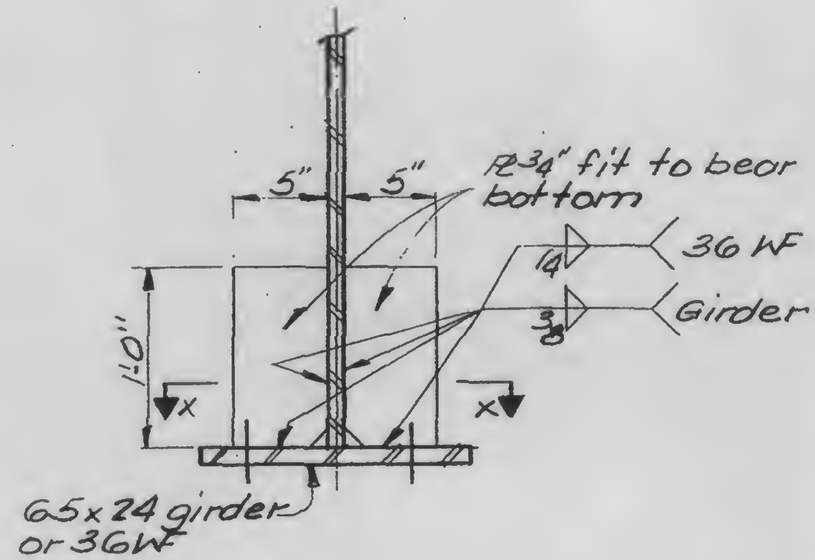

B

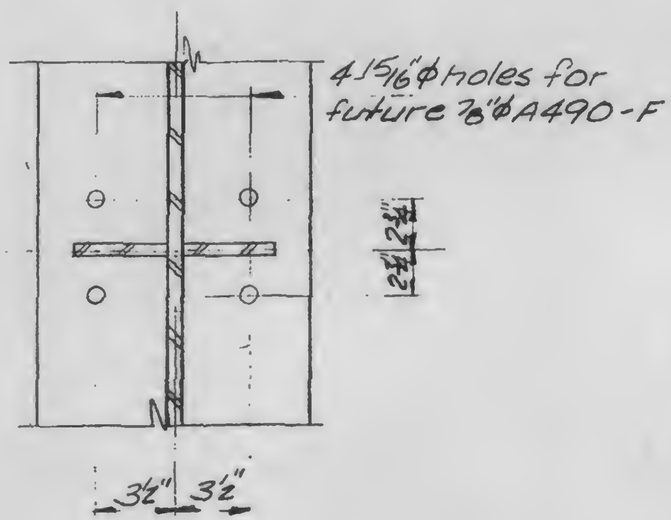

LICENSED PROFESSIONAL ENGINEER — LESLIE E. ROBERTSON — No. 34360 — UNIVERSITY OF THE STATE OF NEW YORK

DESIGNED

DRAWN TR

REVIEWED

1

13-K5.5-1

SKILLING, HELLE, CHRISTIANSEN, ROBERTSON — Structural & Civil Engineers

PROJECT: THE WORLD TRADE CENTER | TITLE: SLIDE CONNECTIONS TOWER B | DATE: 11-3-72

REVISIONS

Released for construction 11-20-72

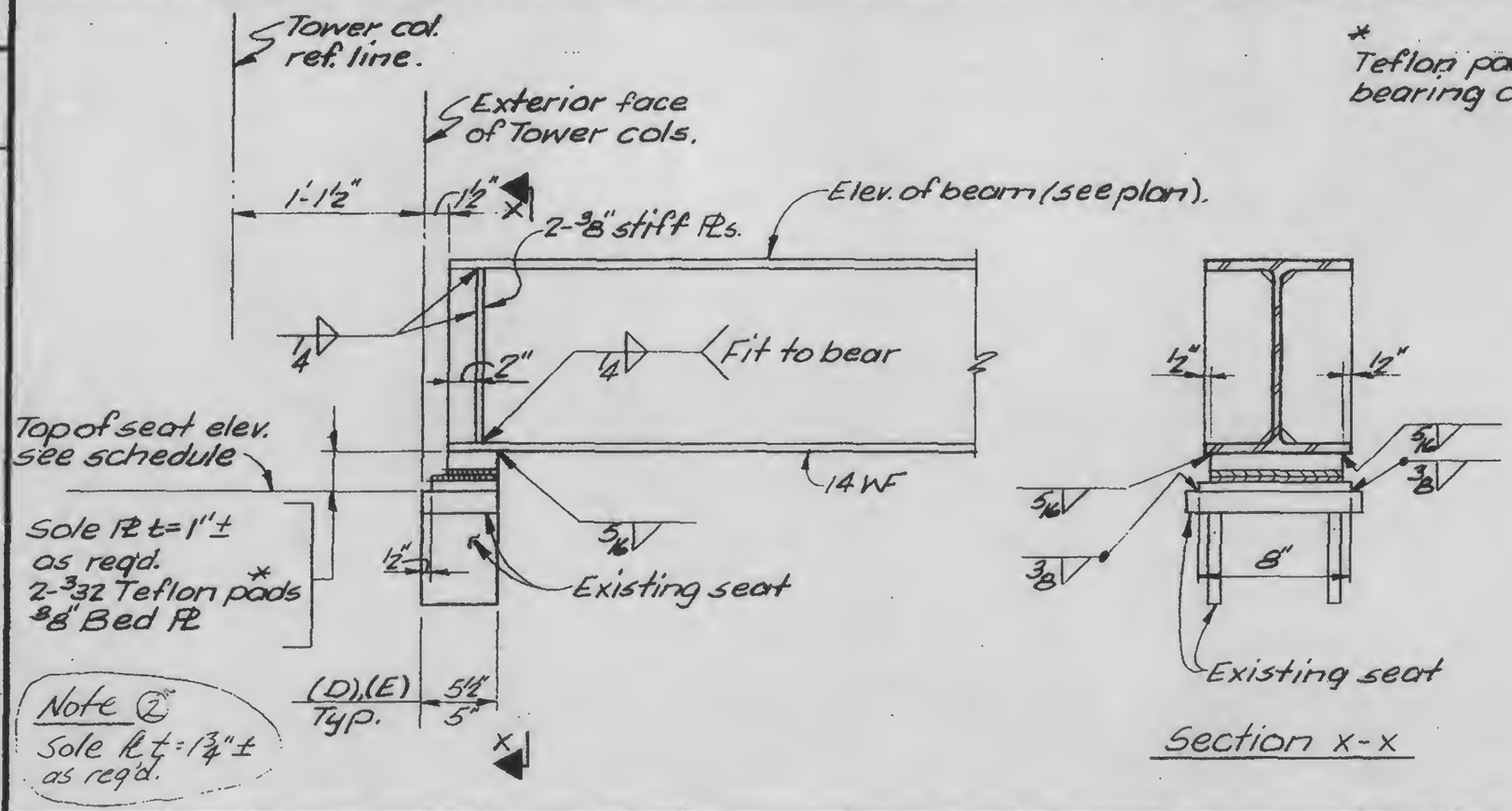

* Teflon pads to have a bearing capacity of 2000 psi.

Section X-X

D
E
F
G
H
J
K
M

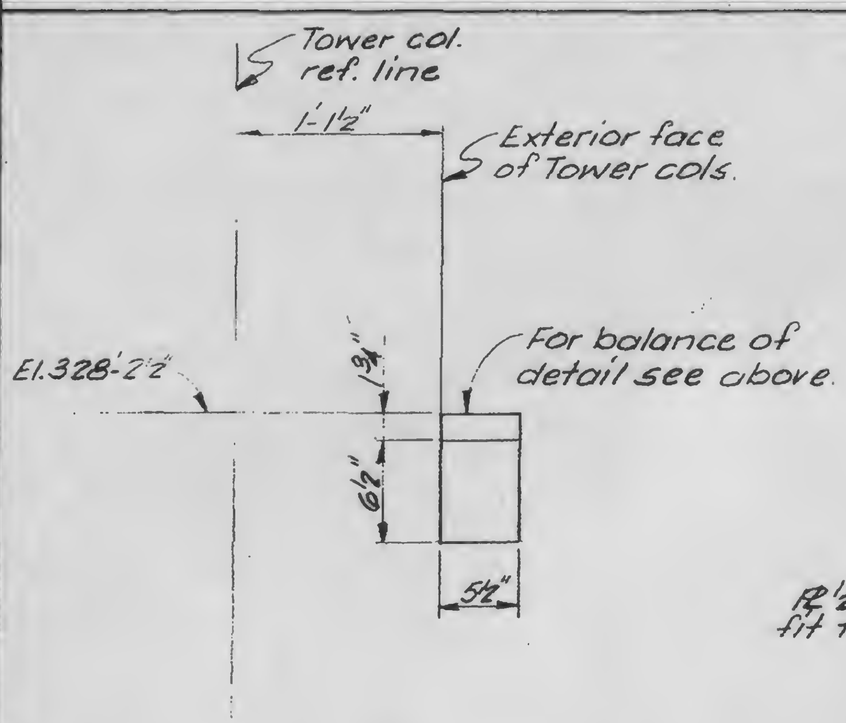

Note ①
Remove exist. seat and replace with new seat.

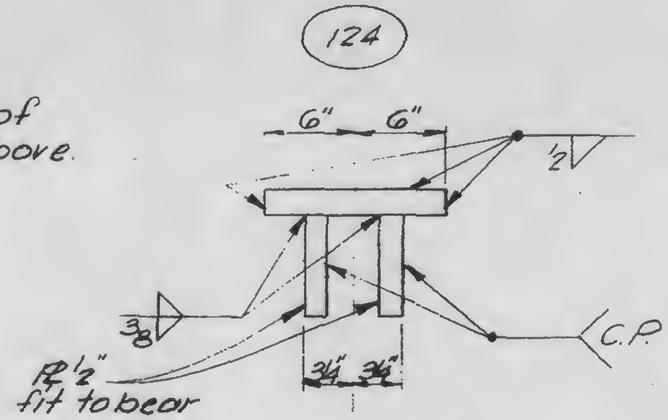

Schedule

Detail Number	Elevation Top of Seat
② D	329'-3⅝"
① E	328'-2½"
F	324'-1"
G	322'-8½"
H	318'-7"
J	317'-2½"
K	313'-1"
M	311'-8½"

LICENSED PROFESSIONAL ENGINEER — LESLIE E. ROBERTSON — No. 34360 — UNIVERSITY OF THE STATE OF NEW YORK

DESIGNED

DRAWN TR

REVIEWED

E

13-KG.1-1

SKILLING, HELLE, CHRISTIANSEN, ROBERTSON

PROJECT THE WORLD TRADE CENTER | TITLE SLIDE CONNECTIONS, TOWER B | DATE 11-3-72

REVISIONS

RELEASED FOR CONSTRUCTION 11-20-72

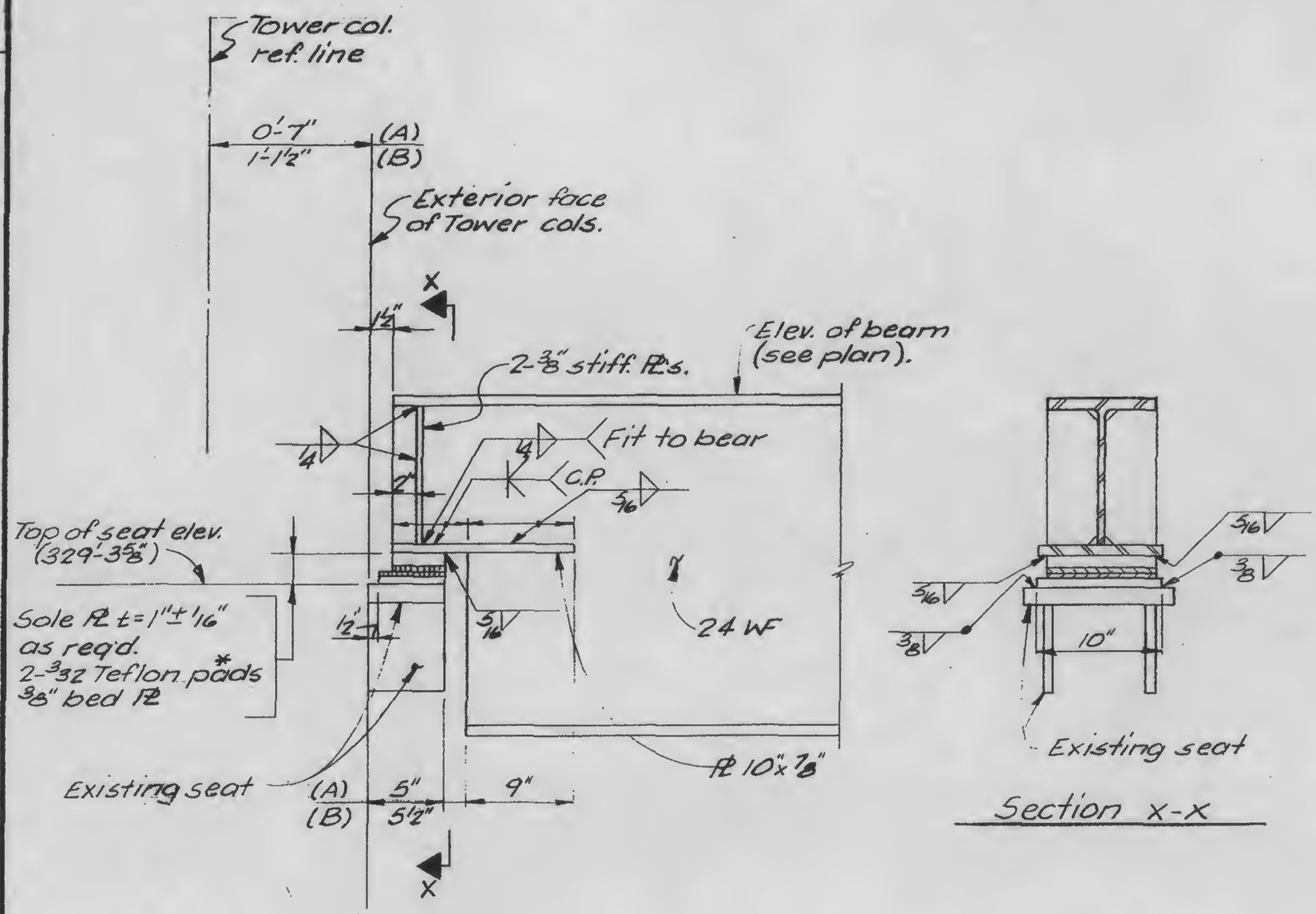

* Teflon pads to have a bearing capacity of 2000 psi.

LICENSED PROFESSIONAL ENGINEER LESLIE E. ROBERTSON No. 34360 UNIVERSITY OF THE STATE OF NEW YORK

DESIGNED

DRAWN TR

REVIEWED

A

B

13-KG.1-2

SKILLING, HELLE, CHRISTIANSEN, ROBERTSON — Structural & Civil Engineers

PROJECT: THE WORLD TRADE CENTER

TITLE: SLIDE CONNECTION Tower B

DATE: 11-3-72

REVISIONS

RELEASED FOR CONSTRUCTION 11-20-72

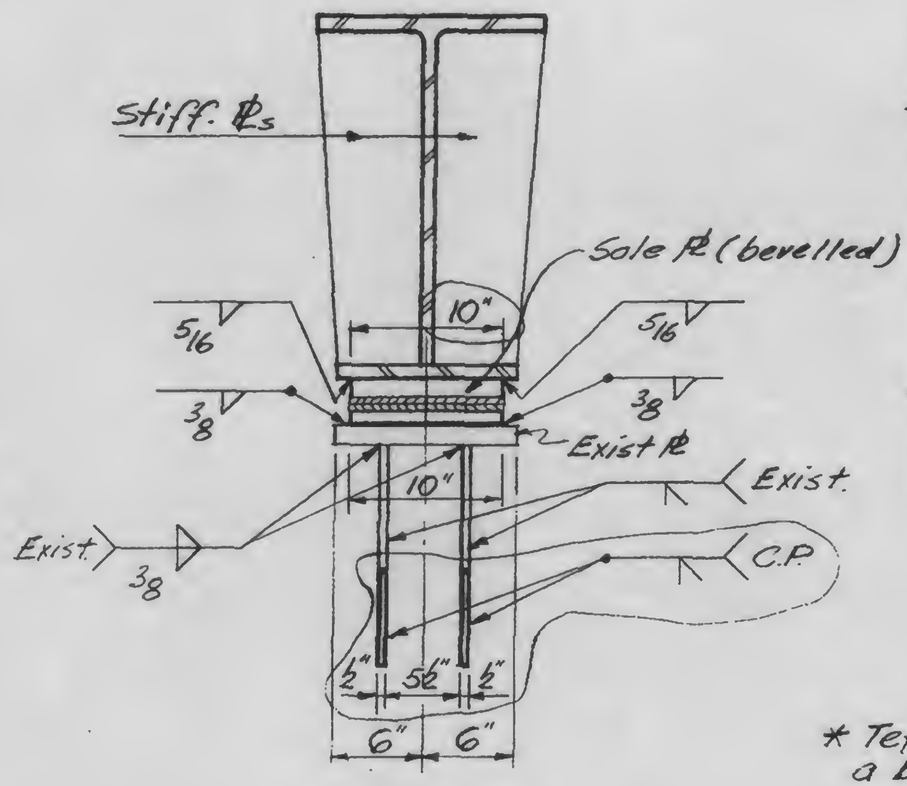

Section a-a

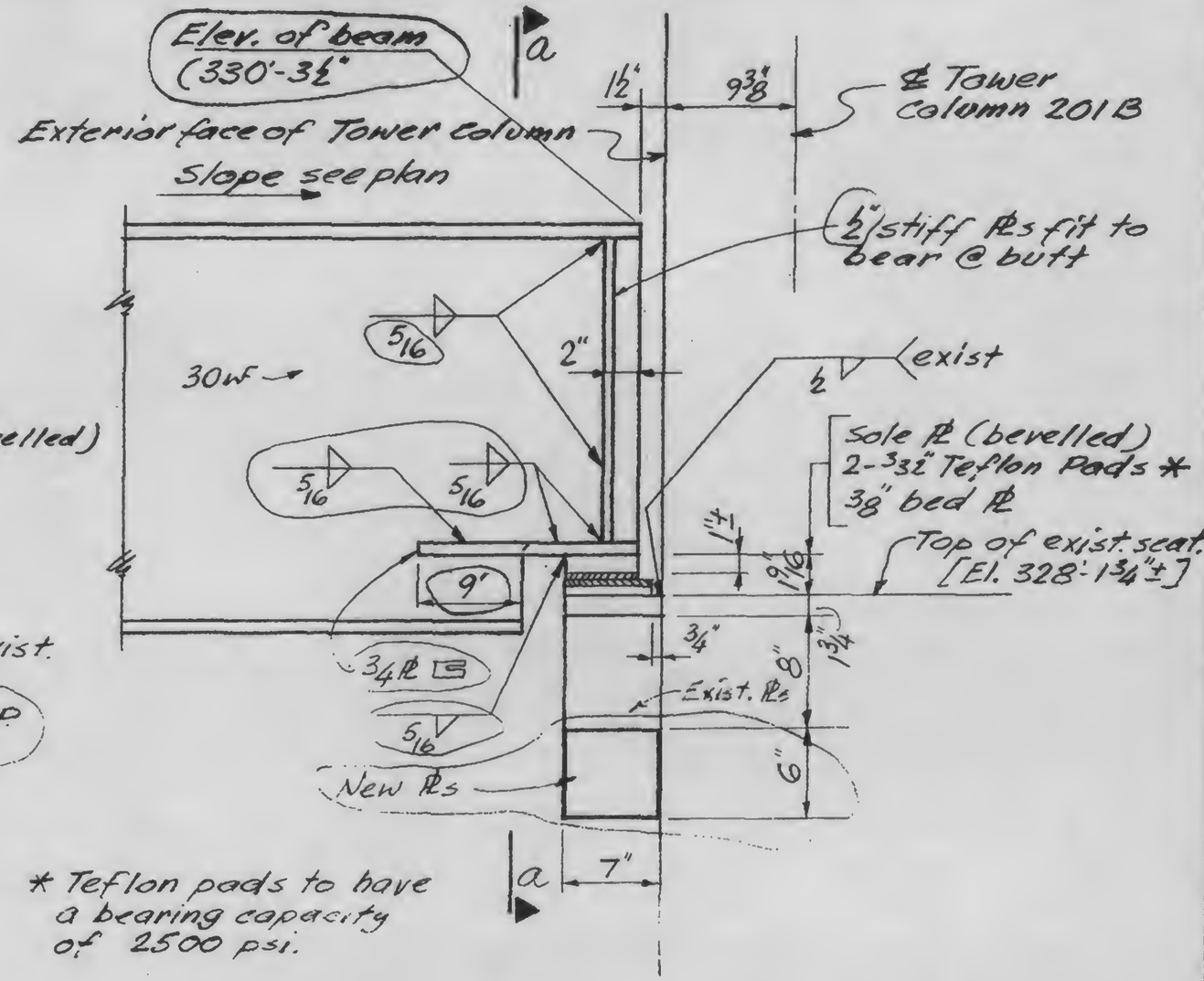

* Teflon pads to have a bearing capacity of 2500 psi.

Elevation

LICENSED PROFESSIONAL ENGINEER — LESLIE E. ROBERTSON — No. 34360 — UNIVERSITY OF THE STATE OF NEW YORK

DESIGNED

DRAWN

REVIEWED

13-K6.1-3

SKILLING, HELLE, CHRISTIANSEN, ROBERTSON — Structural & Civil Engineers

PROJECT: THE WORLD TRADE CENTER

TITLE: SLIDE CONNECTIONS

DATE: 11-20-72

REVISIONS

RELEASED FOR CONSTRUCTION 11-20-72

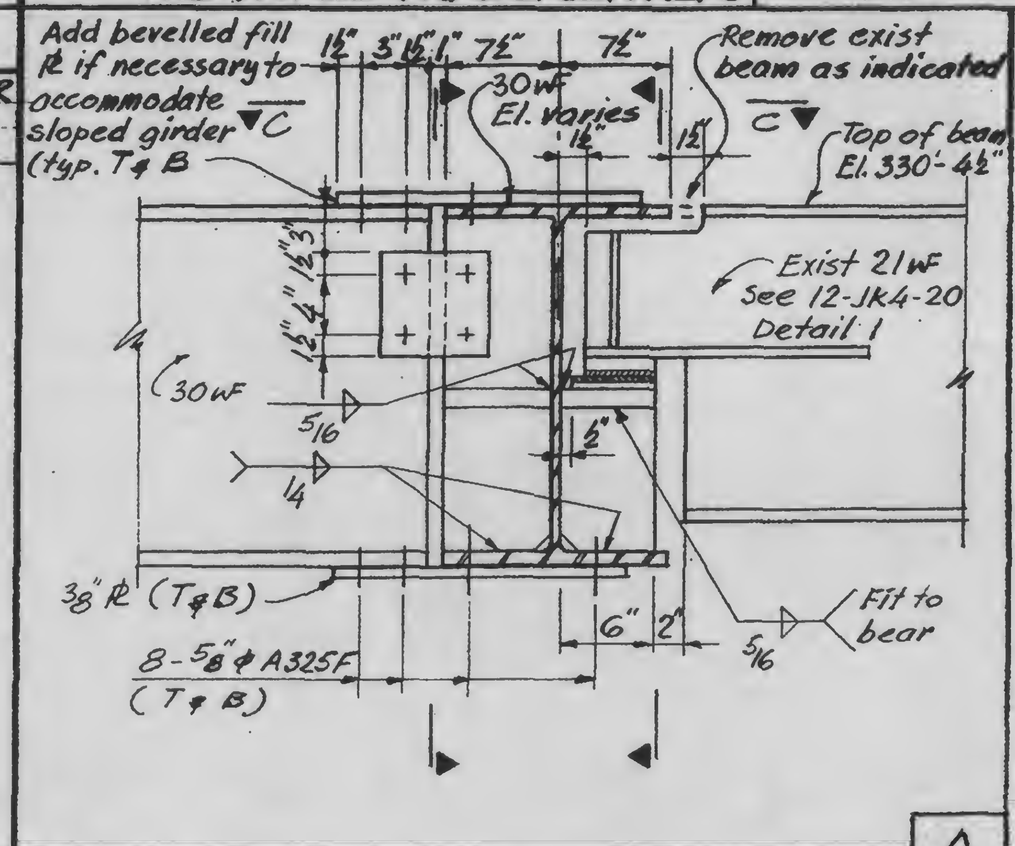

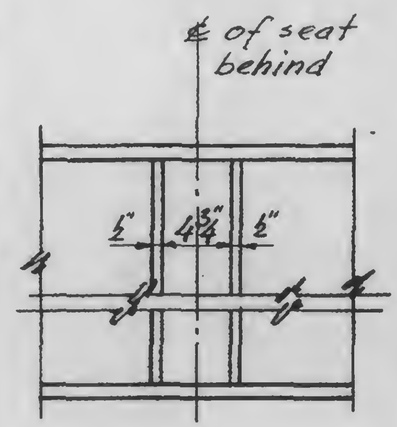

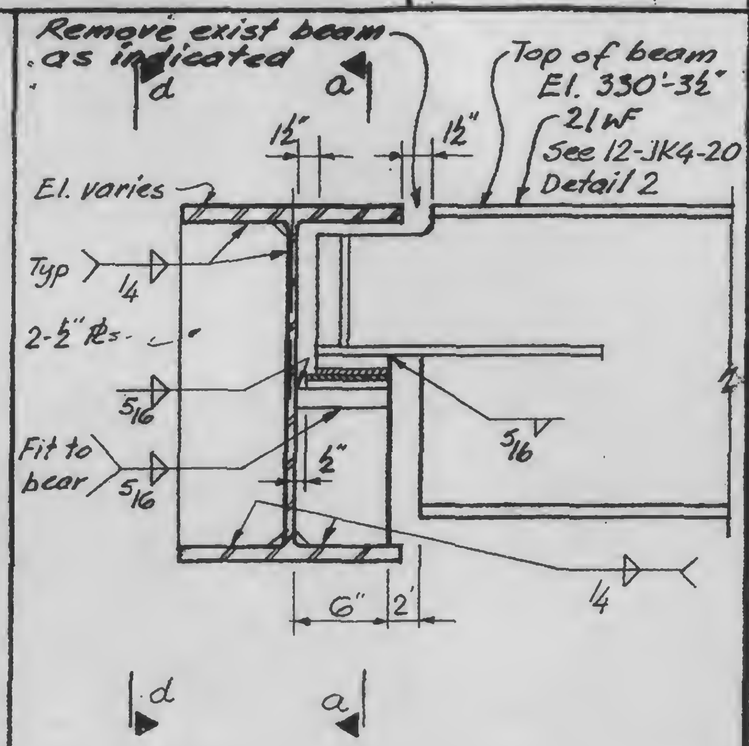

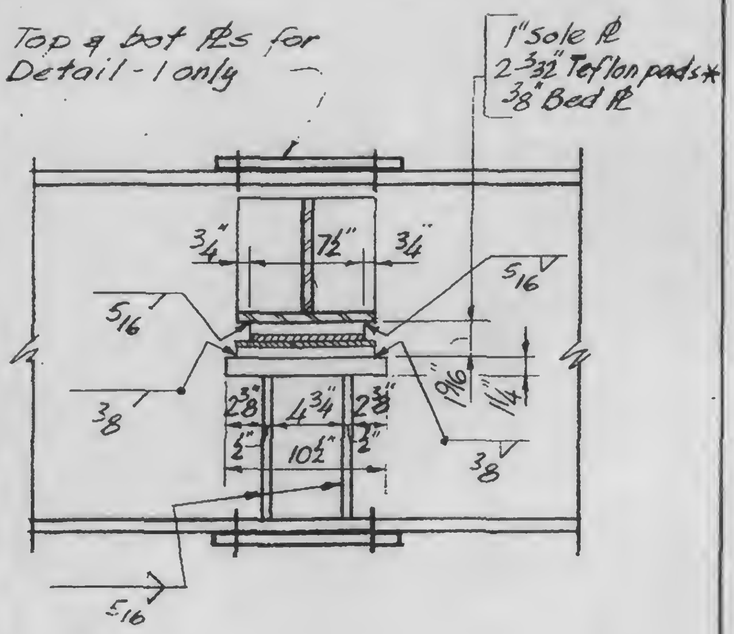

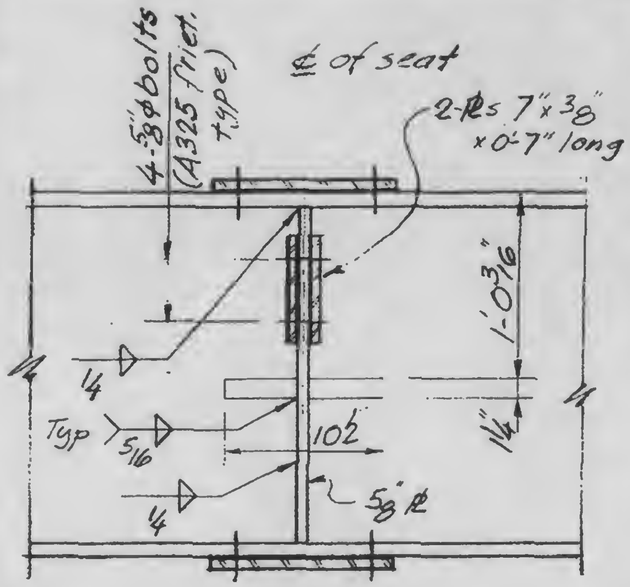

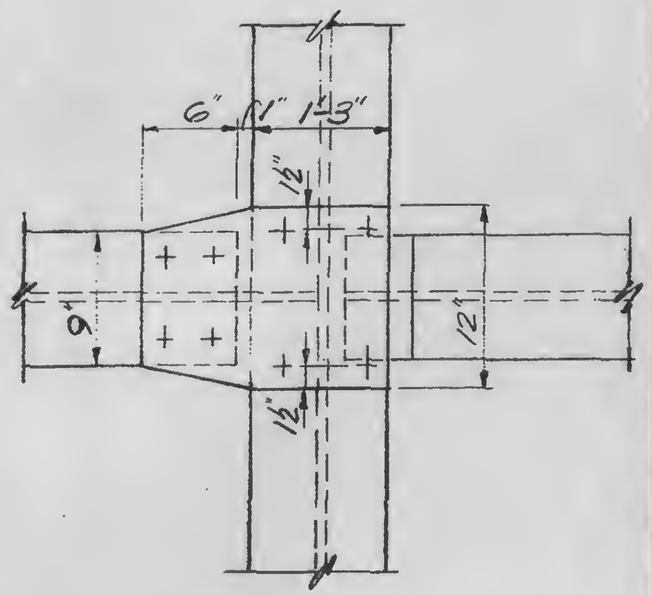

*Teflon pads to have a bearing capacity of 2000 psi

LICENSED PROFESSIONAL ENGINEER — LESLIE E. ROBERTSON — No. 34360 — UNIVERSITY OF THE STATE OF NEW YORK

DESIGNED

DRAWN

REVIEWED

13-K6.1-4

SKILLING, HELLE, CHRISTIANSEN, ROBERTSON — Structural & Civil Engineers

PROJECT: THE WORLD TRADE CENTER | TITLE: SLIDE CONNECTION | DATE: 4-20-73

REVISIONS

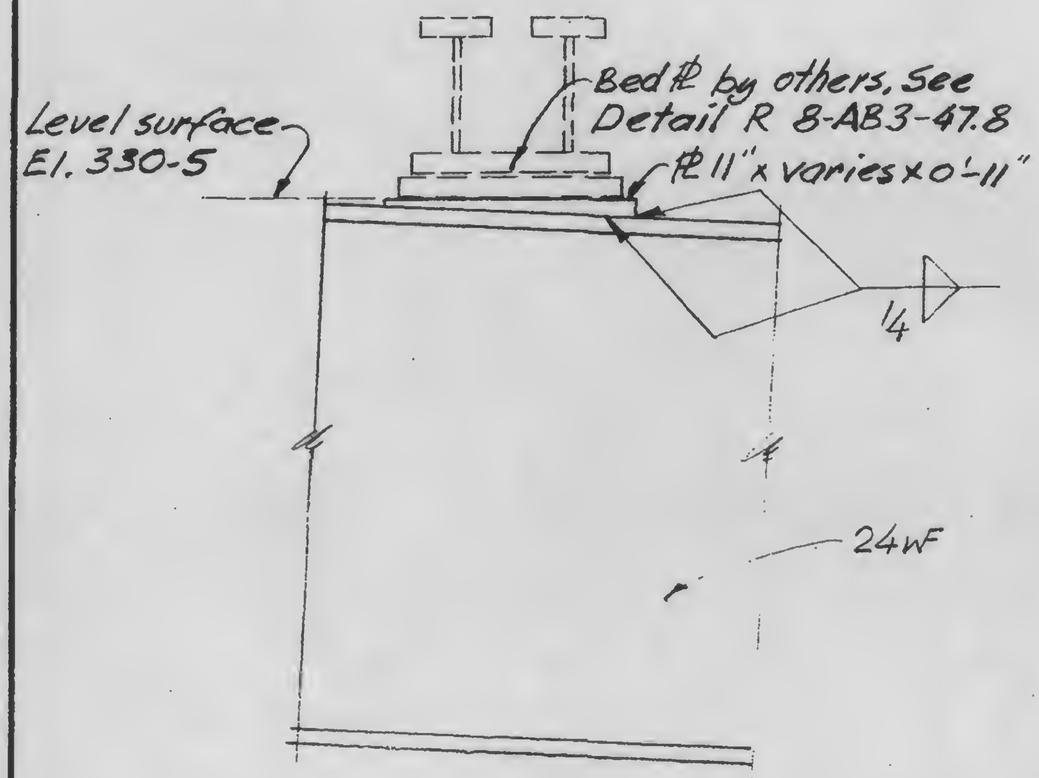

LICENSED PROFESSIONAL ENGINEER
LESLIE E. ROBERTSON
No. 34360
UNIVERSITY OF THE STATE OF NEW YORK

DESIGNED

DRAWN

REVIEWED

A

13-K6.1-5

SKILLING, HELLE, CHRISTIANSEN, ROBERTSON — Structural & Civil Engineers

PROJECT: THE WORLD TRADE CENTER | TITLE: BEAM CONNECTION DETAIL AT STAIR | DATE: 11-3-72

REVISIONS

Released for construction 11-20-72

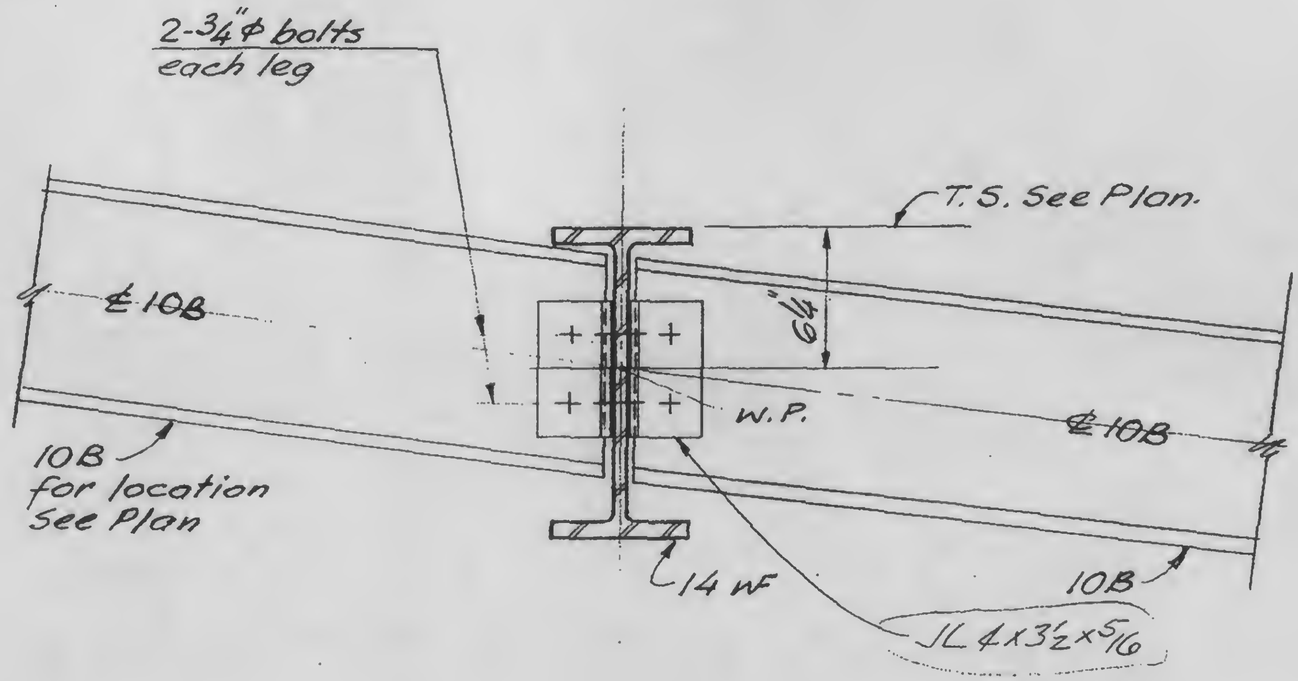

A

B

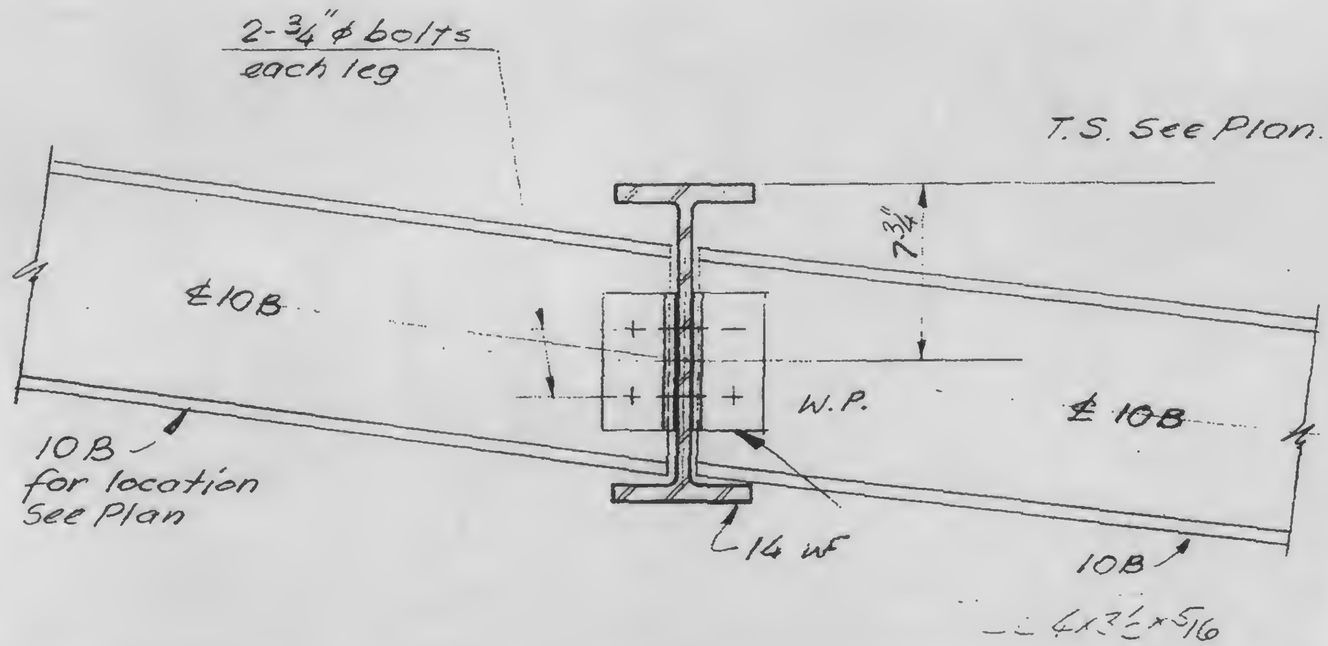

LICENSED PROFESSIONAL ENGINEER — LESLIE E. ROBERTSON — No. 34360 — UNIVERSITY OF THE STATE OF NEW YORK

DESIGNED

DRAWN John Gracey

REVIEWED

13-K6.2-1

SKILLING, HELLE, CHRISTIANSEN, ROBERTSON — Structural & Civil Engineers

PROJECT: THE WORLD TRADE CENTER | TITLE: DETAIL OF HANGERS AT STAIR | DATE: 11-3-72

REVISIONS

Released for construction 11-20-72

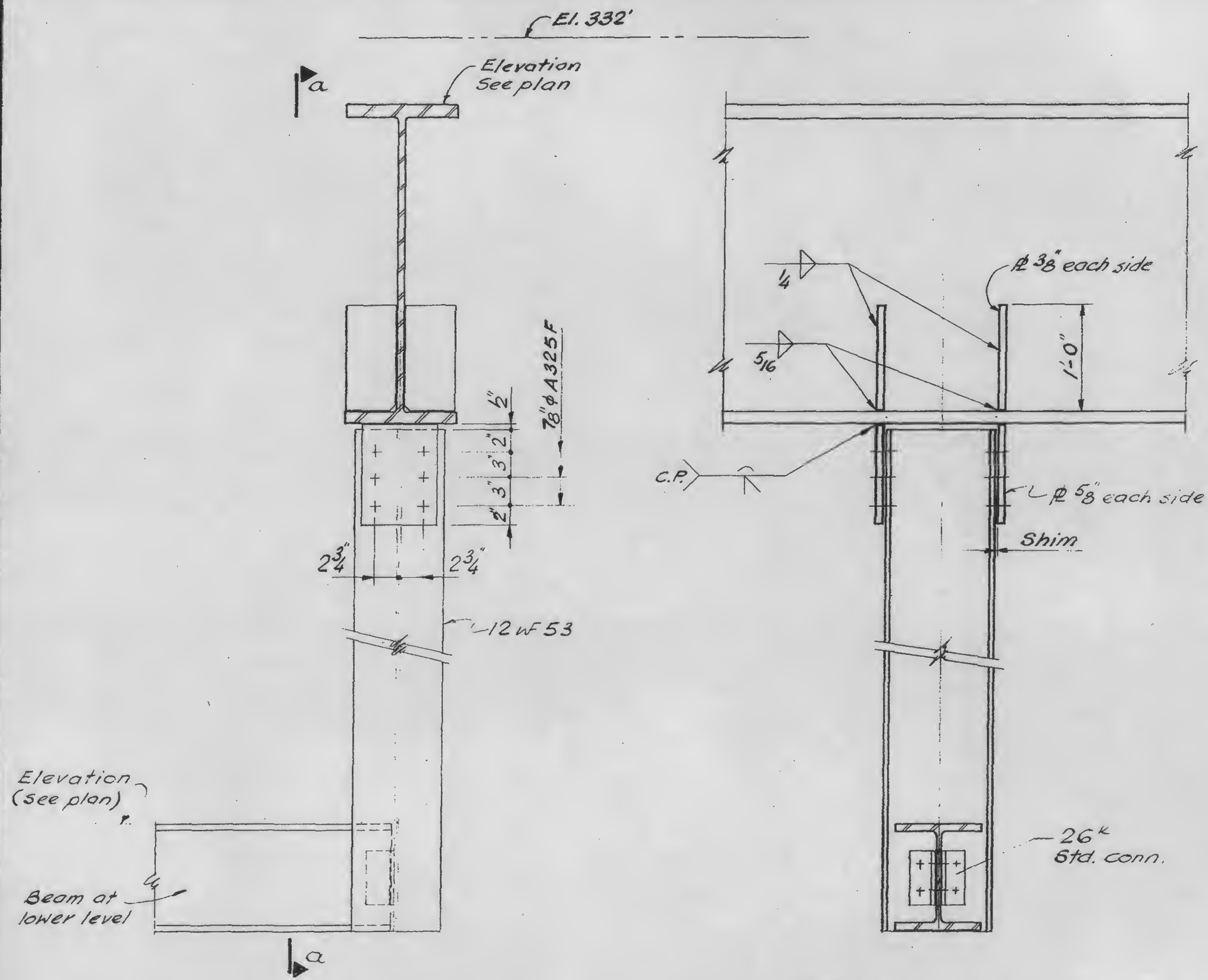

LICENSED PROFESSIONAL ENGINEER — LESLIE E. ROBERTSON — No. 34360 — UNIVERSITY OF THE STATE OF NEW YORK

DESIGNED

DRAWN John Gucius

REVIEWED

13-K6.2-2

SKILLING, HELLE, CHRISTIANSEN, ROBERTSON — Structural & Civil Engineers

PROJECT: THE WORLD TRADE CENTER

TITLE: DETAILS TO EXISTING AT STAIR

DATE: 11-3-72

REVISIONS

Released for construction 11-20-72

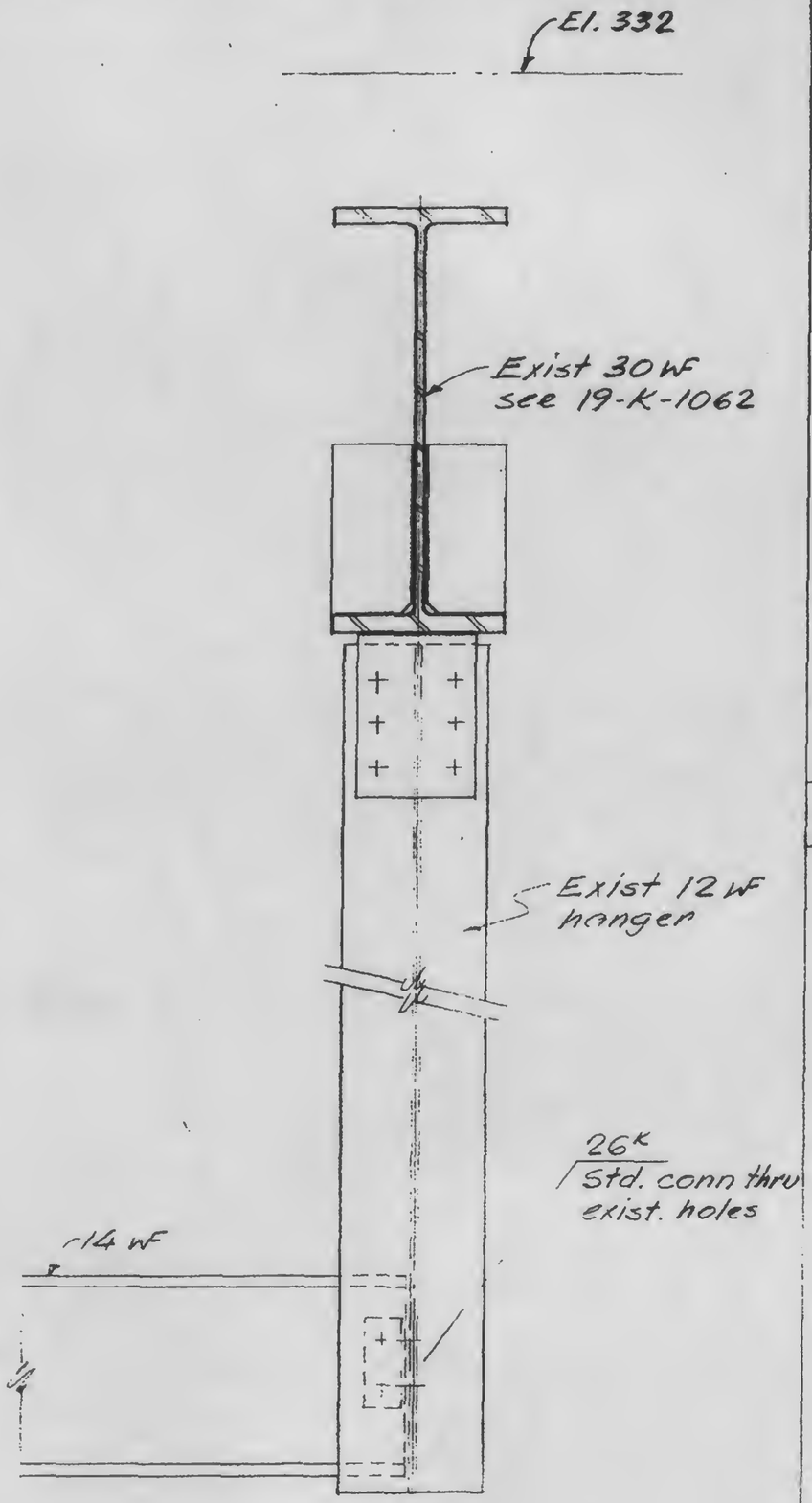

A

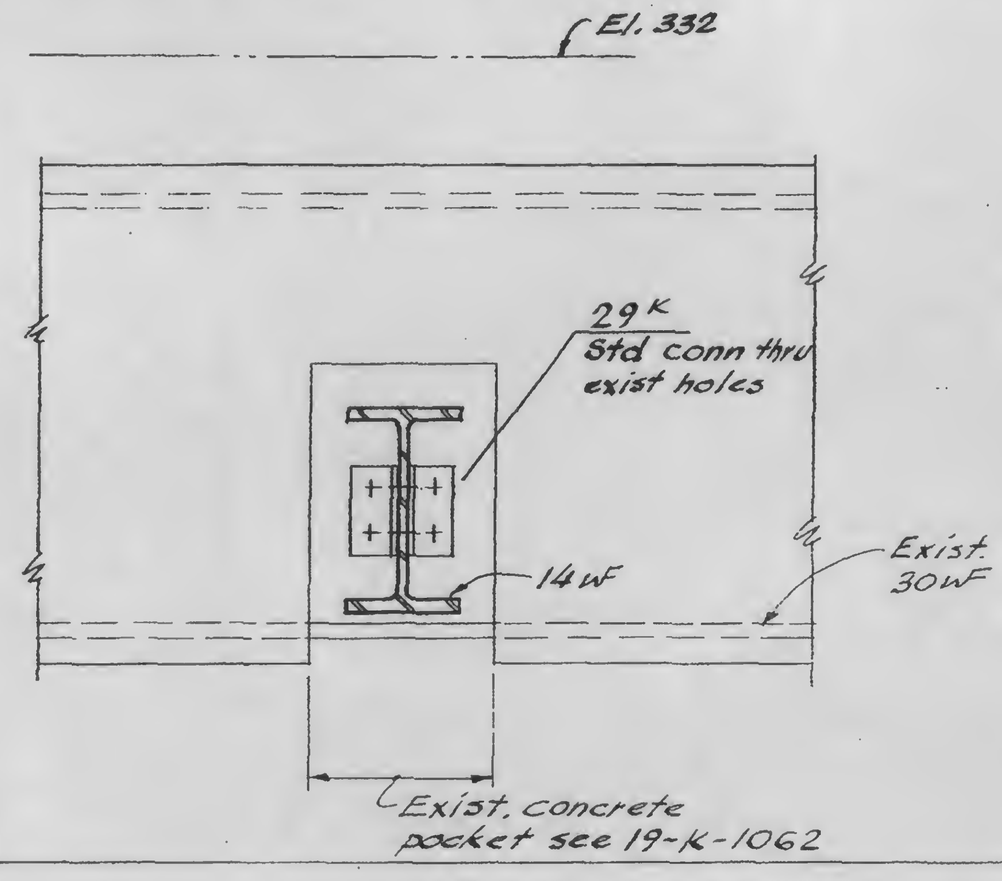

B

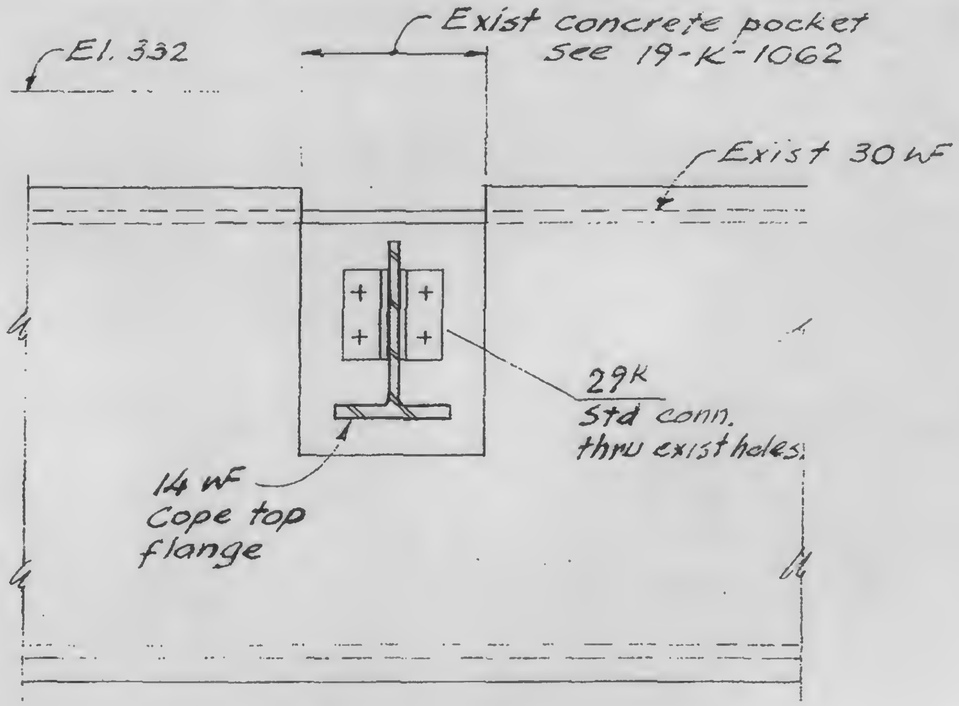

C

LICENSED PROFESSIONAL ENGINEER — LESLIE E. ROBERTSON — No. 34360 — UNIVERSITY OF THE STATE OF NEW YORK

DESIGNED

DRAWN

REVIEWED

13-K6.2-3

SKILLING, HELLE, CHRISTIANSEN, ROBERTSON — Structural & Civil Engineers

PROJECT: THE WORLD TRADE CENTER | TITLE: DETAIL TO EXISTING AT STAR | DATE: 11-3-72

REVISIONS

Released for construction 11-20-72

2-5-73

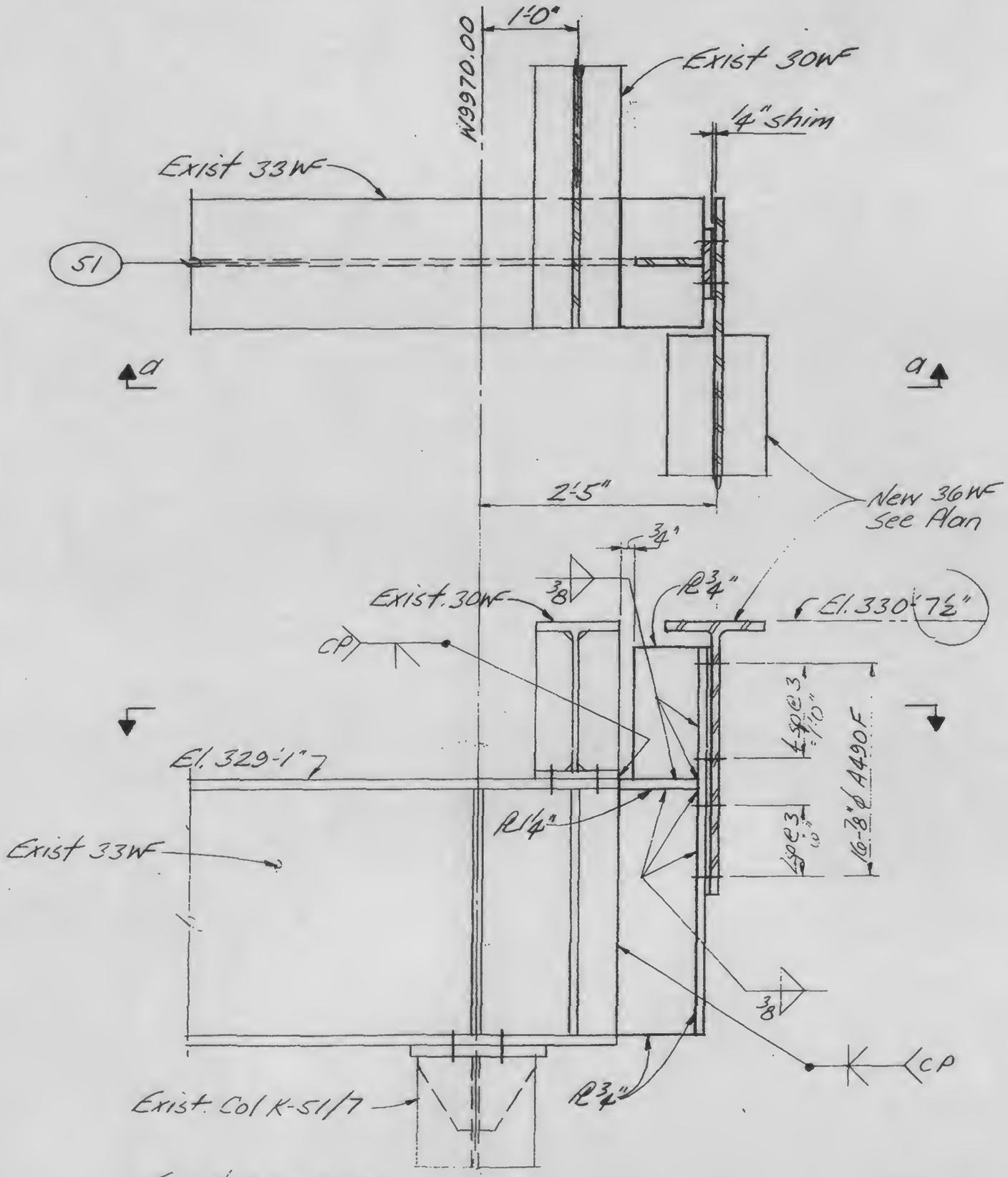

Section a-a

LICENSED PROFESSIONAL ENGINEER — LESLIE E. ROBERTSON — No. 34360 — UNIVERSITY OF THE STATE OF NEW YORK

DESIGNED

DRAWN

REVIEWED

13-K6.2-4

SKILLING, HELLE, CHRISTIANSEN, ROBERTSON — Structural & Civil Engineers

PROJECT: THE WORLD TRADE CENTER

TITLE: BEAM CONNECTIONS AT EXISTING

DATE: 11-3-72

REVISIONS

Release for construction 11-20-72

2-5-73

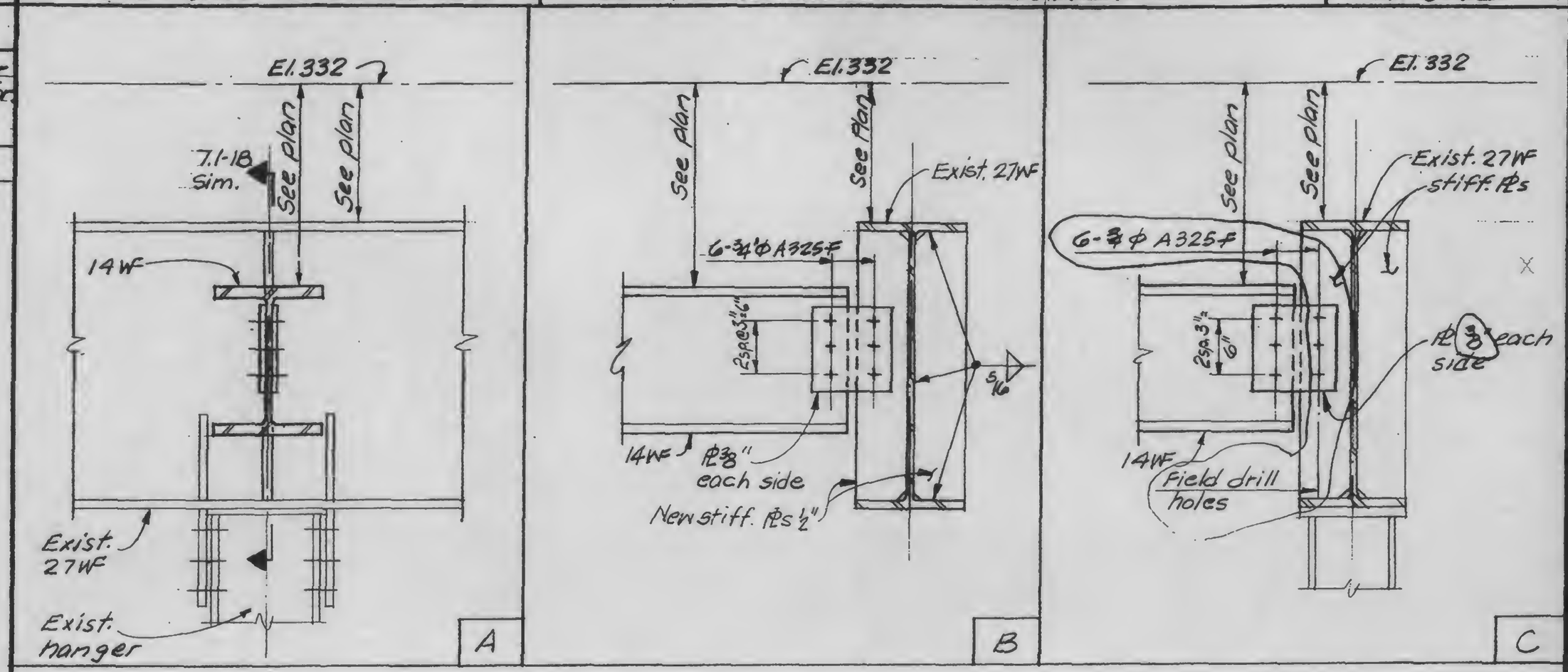

LICENSED PROFESSIONAL ENGINEER — LESLIE E. ROBERTSON — No. 34360 — UNIVERSITY OF THE STATE OF NEW YORK

DESIGNED

DRAWN A.L. Franqui

REVIEWED

13-K7.1-1

SKILLING, HELLE, CHRISTIANSEN, ROBERTSON — Structural & Civil Engineers

PROJECT: THE WORLD TRADE CENTER

TITLE: BEAM END NOTCHES & CONNECTIONS

DATE: 11-3-72

REVISIONS

Released for construction 11-20-72

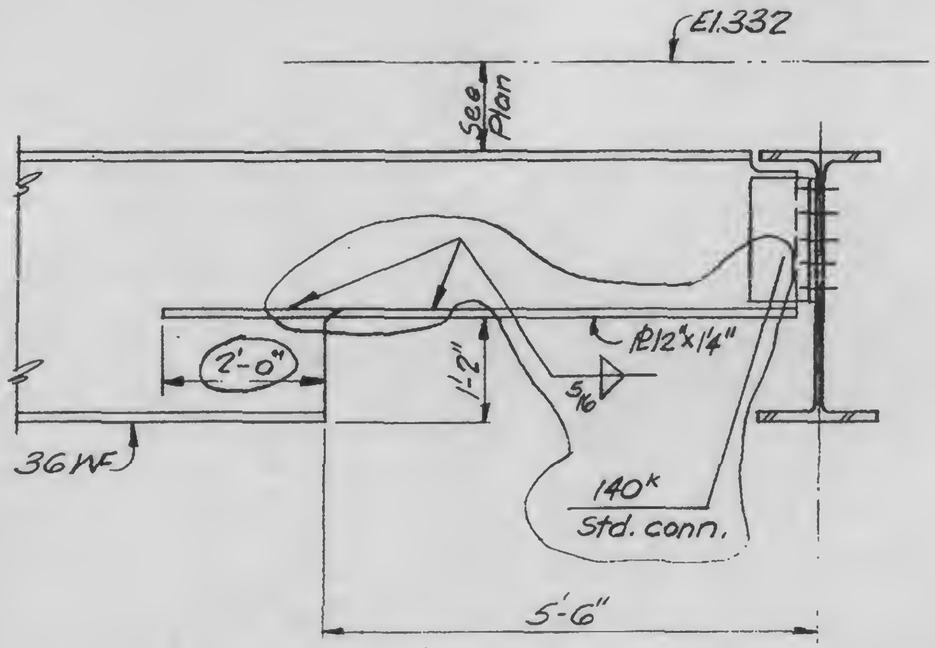

A

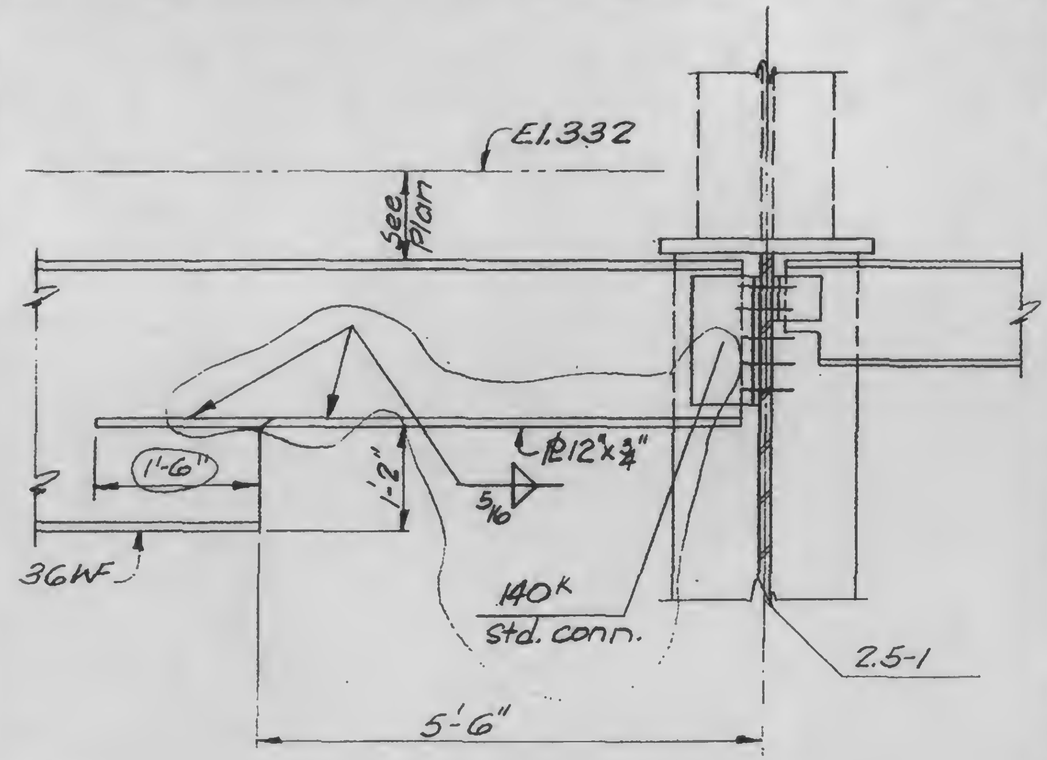

B

LICENSED PROFESSIONAL ENGINEER
LESLIE E. ROBERTSON
No. 34360
UNIVERSITY OF THE STATE OF NEW YORK

DESIGNED: WAB

DRAWN: TR

REVIEWED:

13-K7.2-1

SKILLING, HELLE, CHRISTIANSEN, ROBERTSON — Structural & Civil Engineers

PROJECT: THE WORLD TRADE CENTER | TITLE: BEAM NOTCH IN EXISTING BEAM | DATE: 11-3-72

REVISIONS

Released for construction 11-20-72

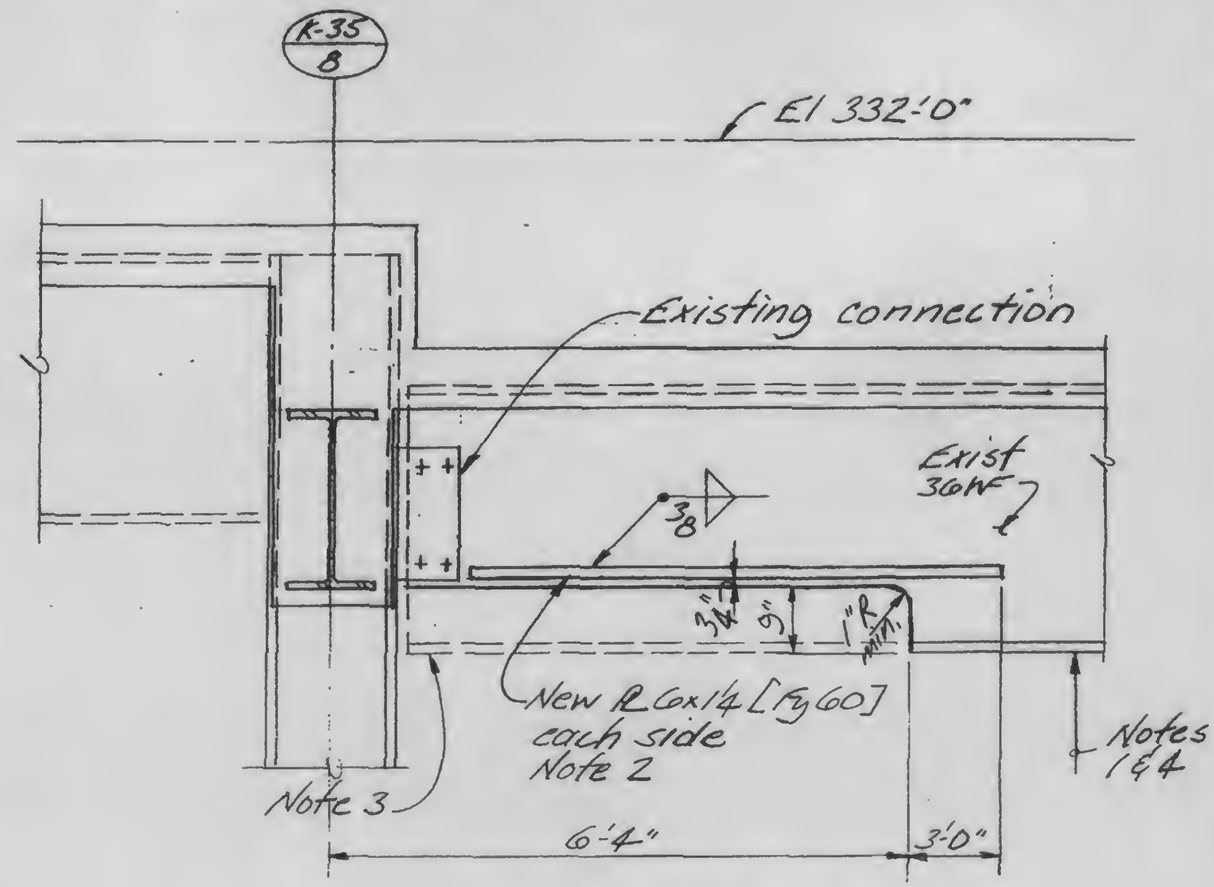

Section A-A

Proceedure

1. Shore
2. Install new PLs
3. Remove portion of beam indicated
4. Remove shore

LICENSED PROFESSIONAL ENGINEER — LESLIE E. ROBERTSON — No. 34360 — UNIVERSITY OF THE STATE OF NEW YORK

DESIGNED

DRAWN

REVIEWED

A

13 K7.3-1

SKILLING, HELLE, CHRISTIANSEN, ROBERTSON — Structural & Civil Engineers

PROJECT: THE WORLD TRADE CENTER

TITLE: HANGER DETAILS ABOVE MECHANICAL PLATFORM

DATE: 11-3-72

REVISIONS

Released for construction 11-2492

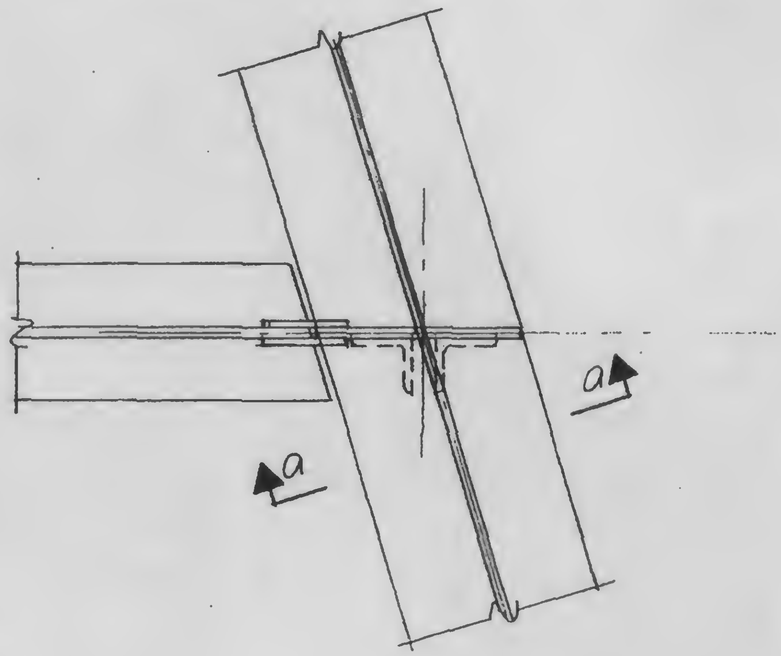

A

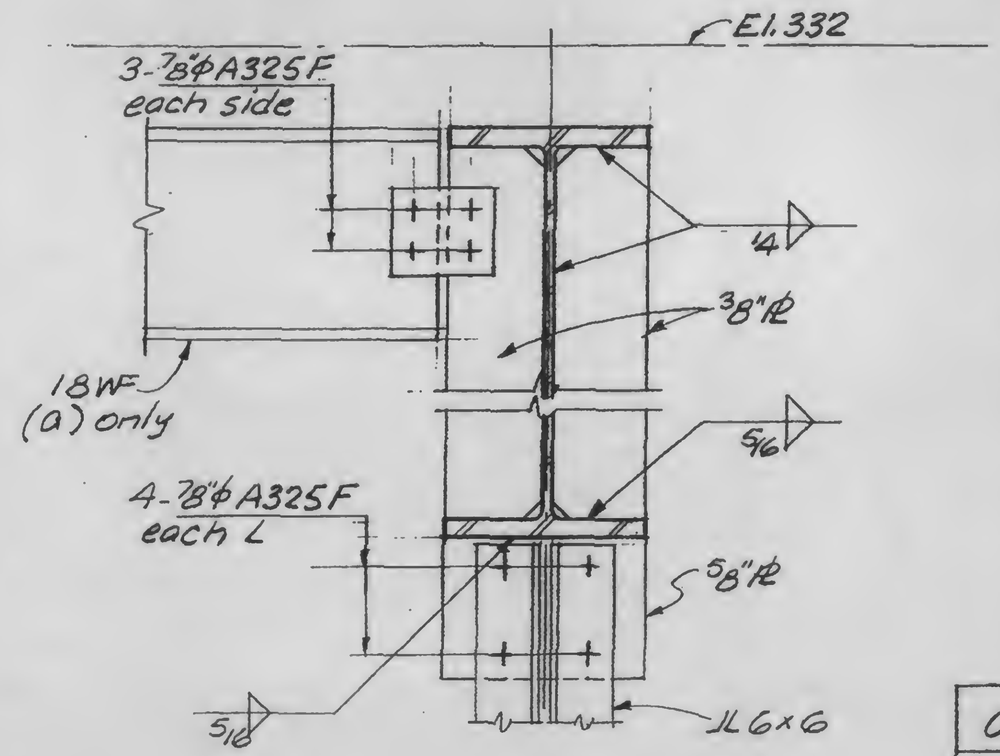

a

b

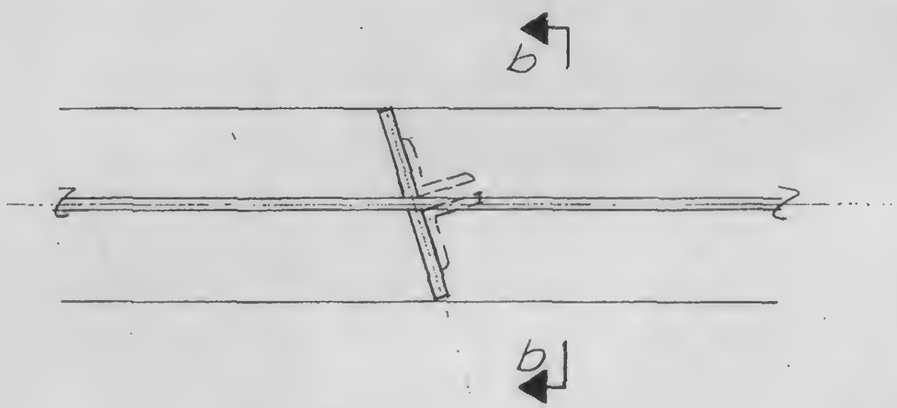

B

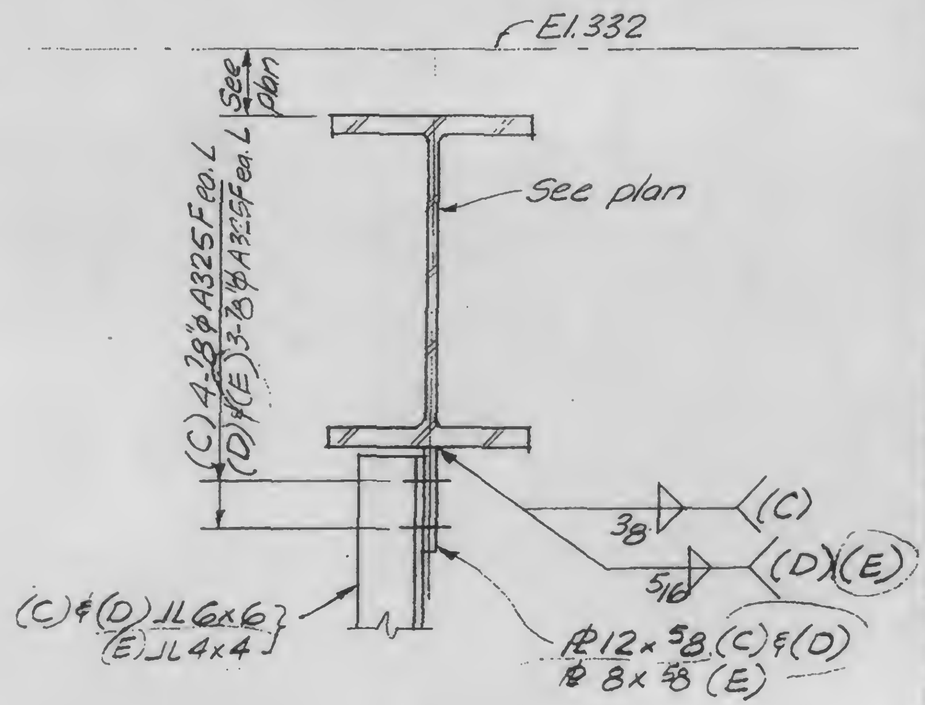

C

D

E

13-K8.1-1

LICENSED PROFESSIONAL ENGINEER — LESLIE E. ROBERTSON — No. 34360 — UNIVERSITY OF THE STATE OF NEW YORK

DESIGNED

DRAWN A.L. Franqui

REVIEWED

SKILLING, HELLE, CHRISTIANSEN, ROBERTSON — Structural & Civil Engineers

PROJECT: THE WORLD TRADE CENTER

TITLE: HANGER DETAILS ABOVE MECHANICAL PLATFORM

DATE: 11-3-72

REVISIONS

Released for construction 11-24-72

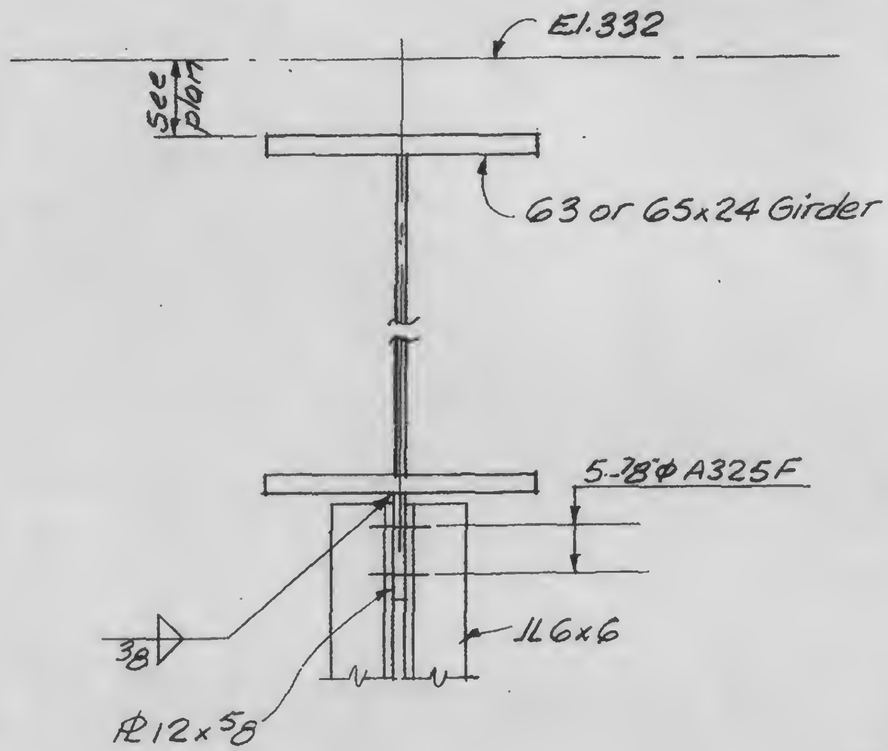

A

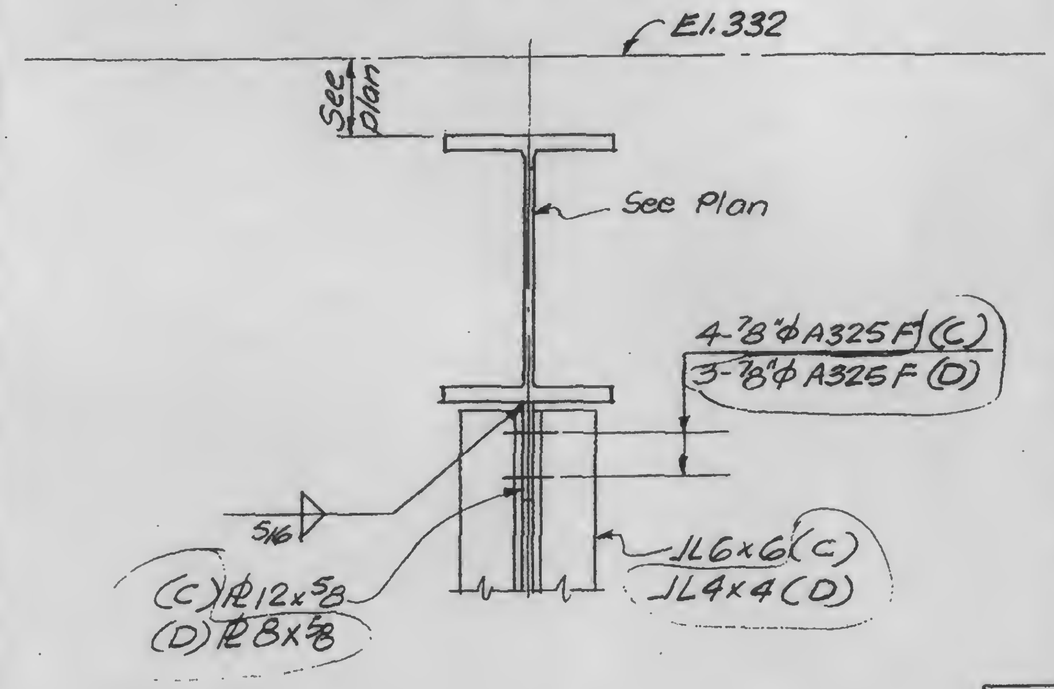

C

D

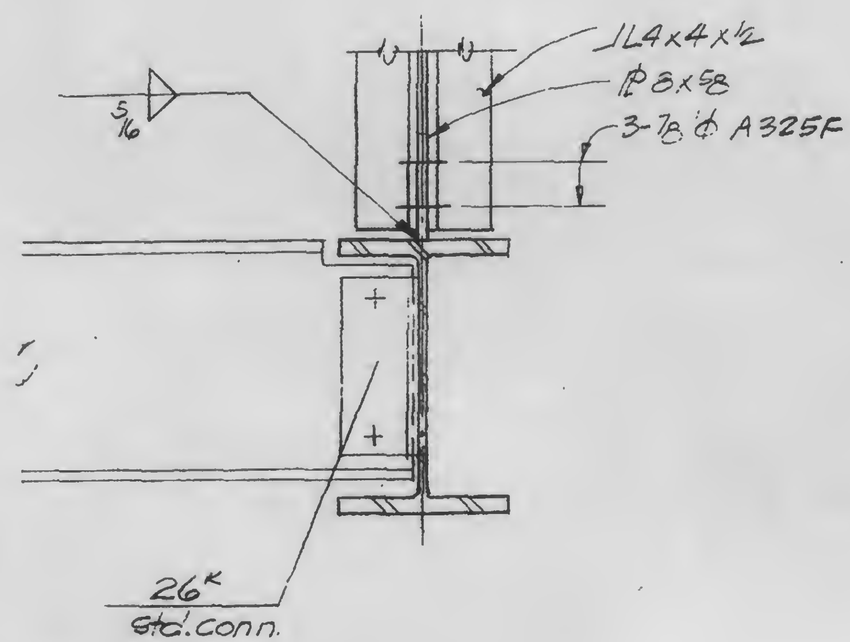

E

13-KB.1-2

LICENSED PROFESSIONAL ENGINEER — LESLIE E. ROBERTSON — No. 34360 — UNIVERSITY OF THE STATE OF NEW YORK

DESIGNED

DRAWN A.L. Franqui

REVIEWED

SKILLING, HELLE, CHRISTIANSEN, ROBERTSON — Structural & Civil Engineers

PROJECT: THE WORLD TRADE CENTER | TITLE: HANGER DETAILS ABOVE MECHANICAL PLATFORM | DATE: 4-20-73

REVISIONS

6-4-73

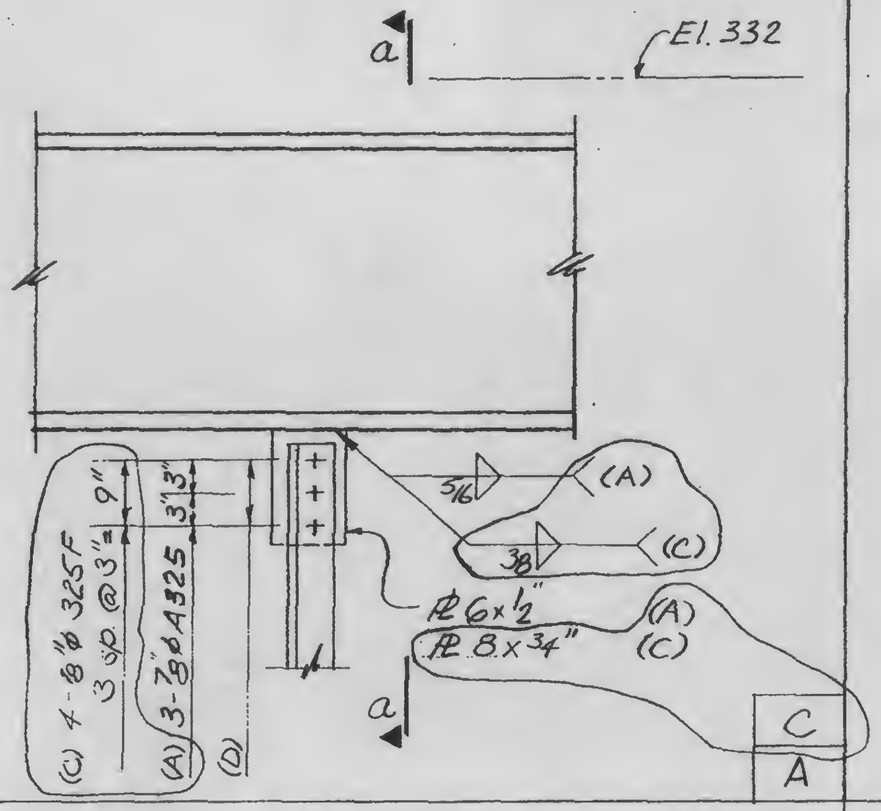

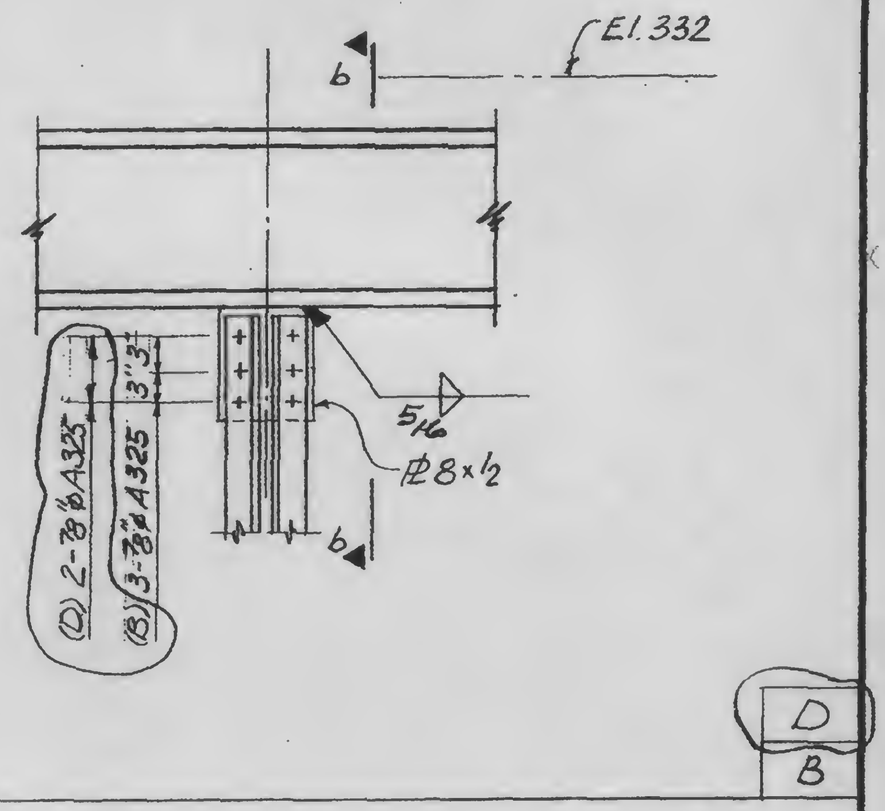

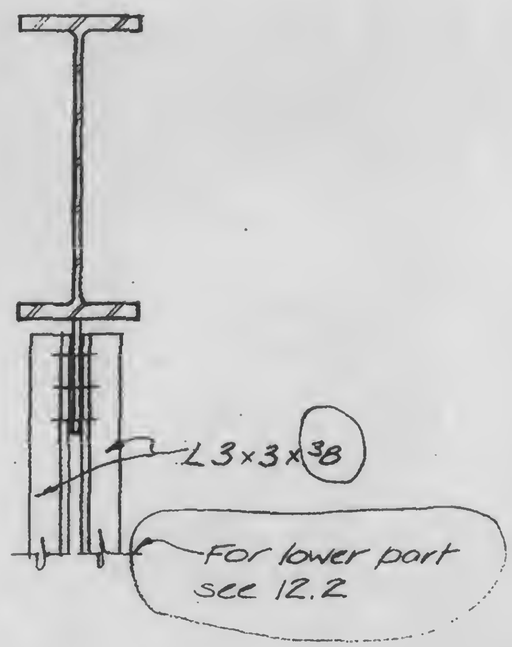

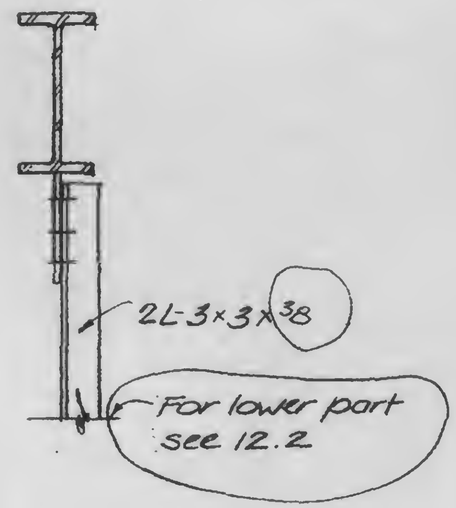

a | b

13-K8.1-3

LICENSED PROFESSIONAL ENGINEER
LESLIE E. ROBERTSON
No. 34360
UNIVERSITY OF THE STATE OF NEW YORK

DESIGNED

DRAWN John Gracias

REVIEWED

SKILLING, HELLE, CHRISTIANSEN, ROBERTSON — Structural & Civil Engineers

PROJECT: THE WORLD TRADE CENTER

TITLE: HANGER DETAILS ABOVE MECHANICAL PLATFORM

DATE: 11-3-72

REVISIONS

Released for construction 11-24-72

2-5-73

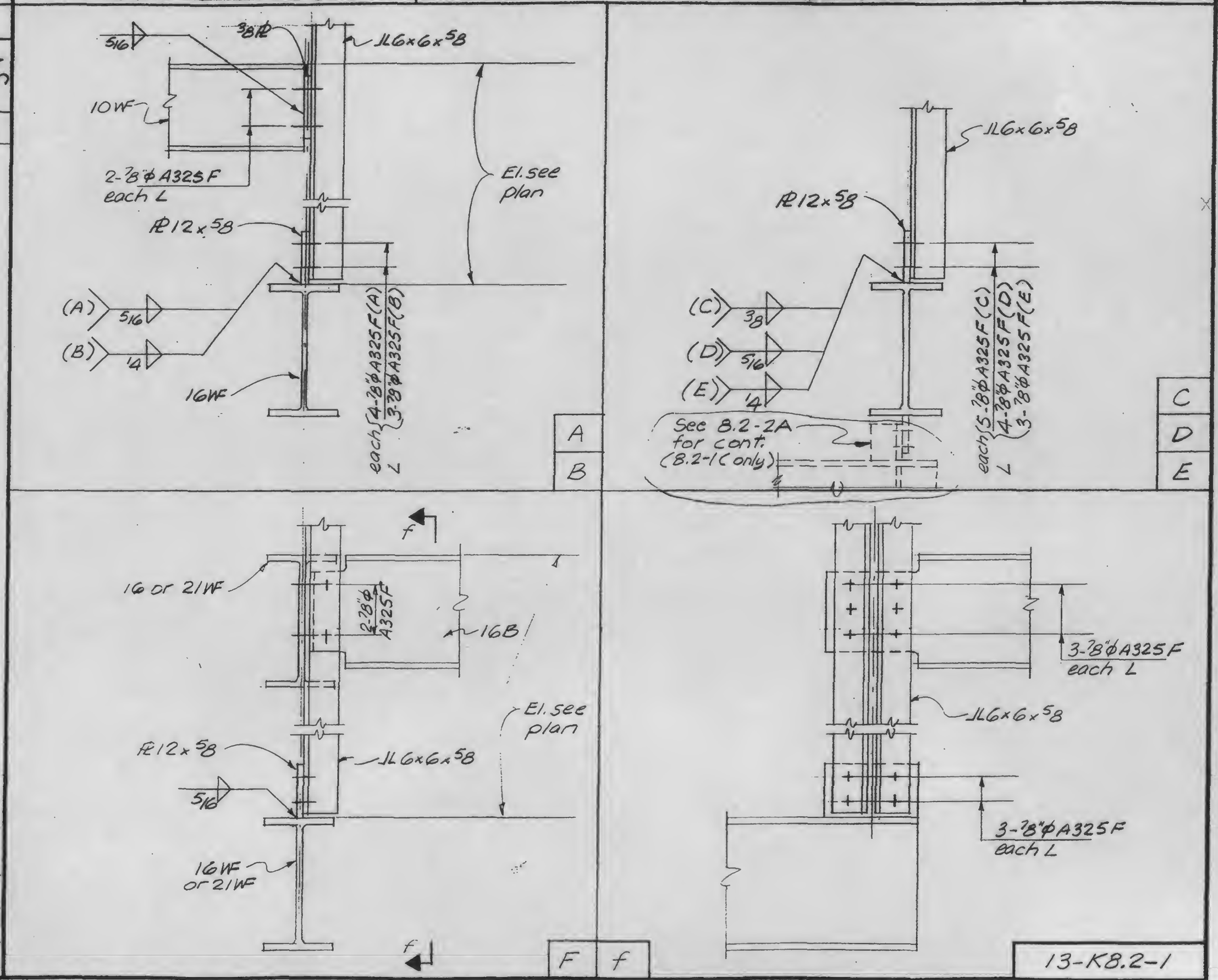

LICENSED PROFESSIONAL ENGINEER — LESLIE E. ROBERTSON — No. 34360 — UNIVERSITY OF THE STATE OF NEW YORK

DESIGNED

DRAWN A.L. Franqui

REVIEWED

13-K8.2-1

SKILLING, HELLE, CHRISTIANSEN, ROBERTSON — Structural & Civil Engineers

PROJECT: THE WORLD TRADE CENTER

TITLE: CONNECTION DETAIL - EL. 310 MECH. PLATFORM

DATE: 2-5-73

REVISIONS

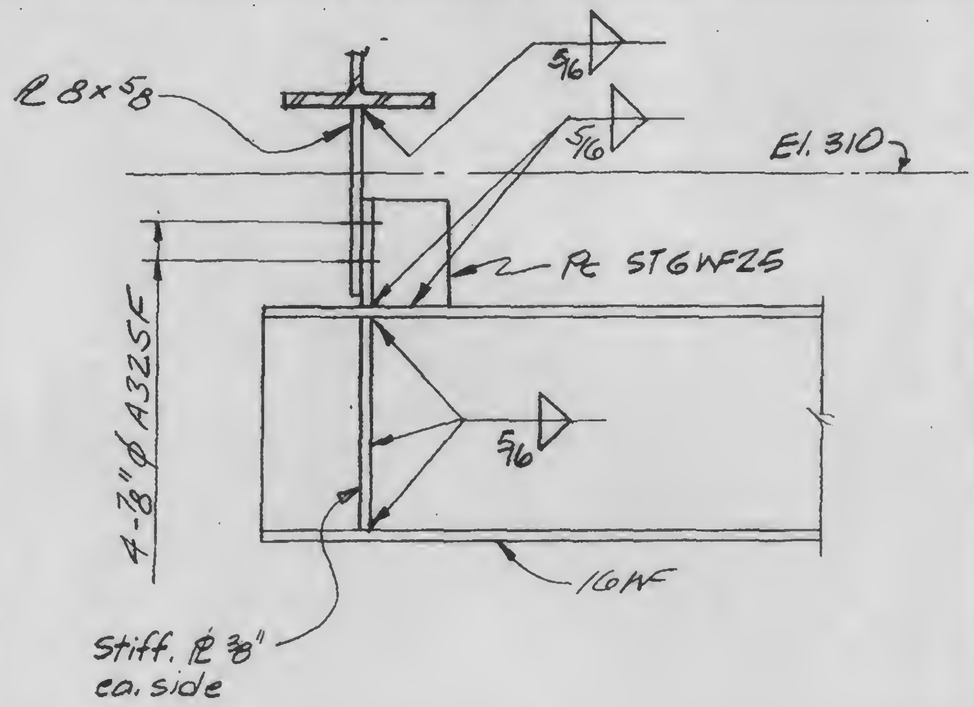

A

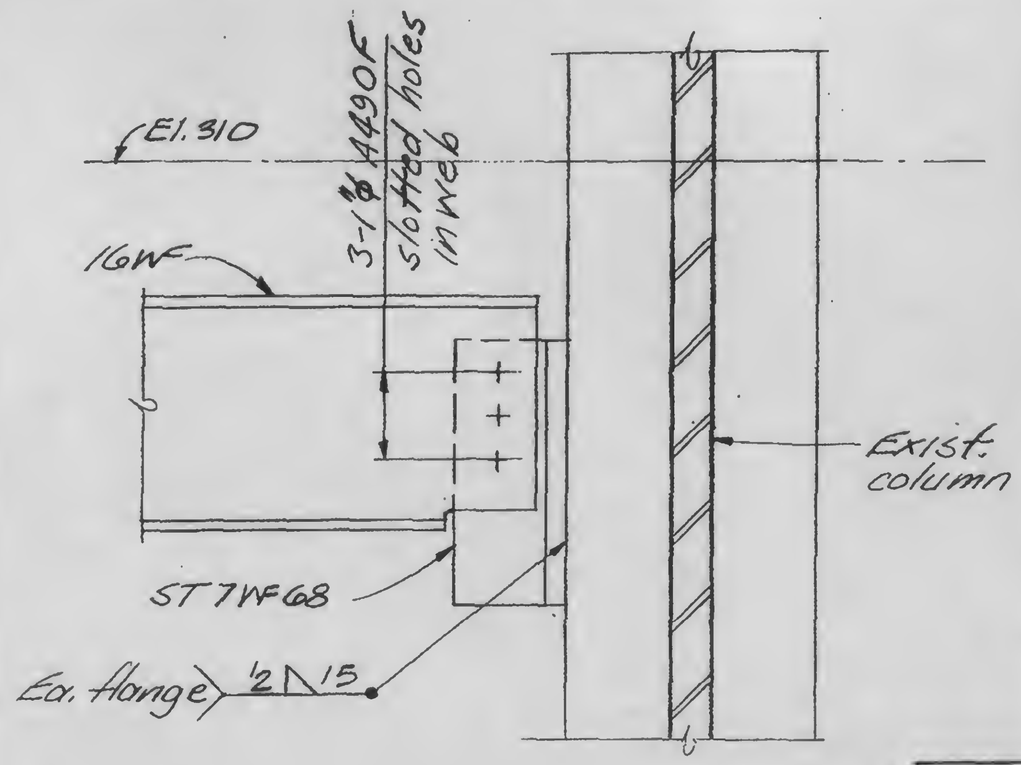

B

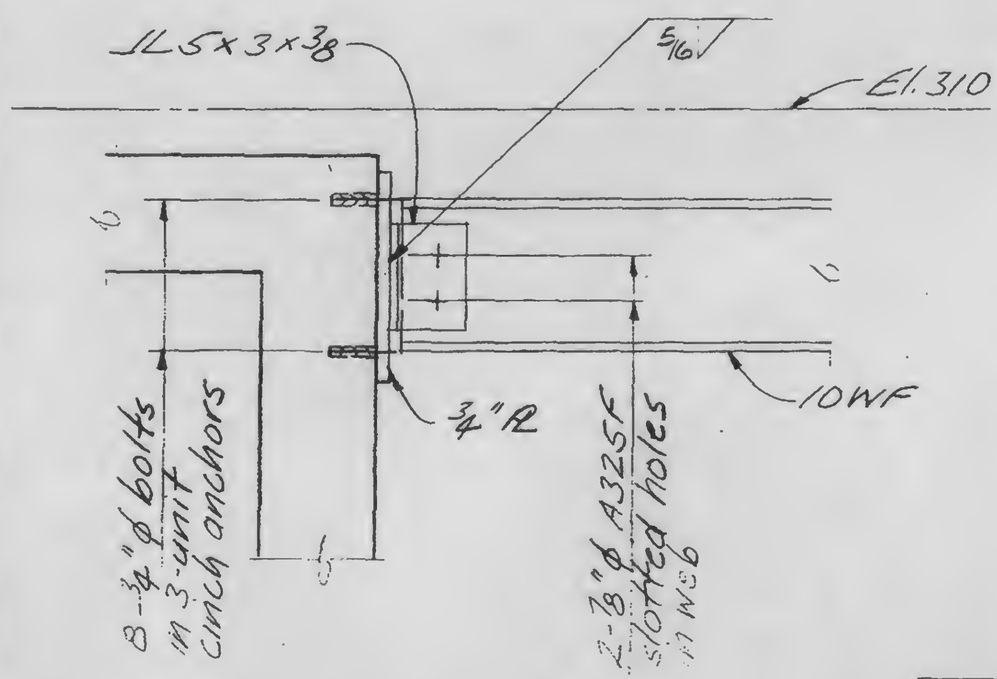

C

LICENSED PROFESSIONAL ENGINEER — LESLIE E. ROBERTSON — No. 34360 — UNIVERSITY OF THE STATE OF NEW YORK

DESIGNED

DRAWN

REVIEWED

13-K8.2-2

SKILLING, HELLE, CHRISTIANSEN, ROBERTSON — Structural Engineers

PROJECT: THE WORLD TRADE CENTER

TITLE: CONNECTION DETAILS - INTERMEDIATE LEVEL

DATE: 11-3-72

REVISIONS

Released for construction 11-24-72

2-5-73

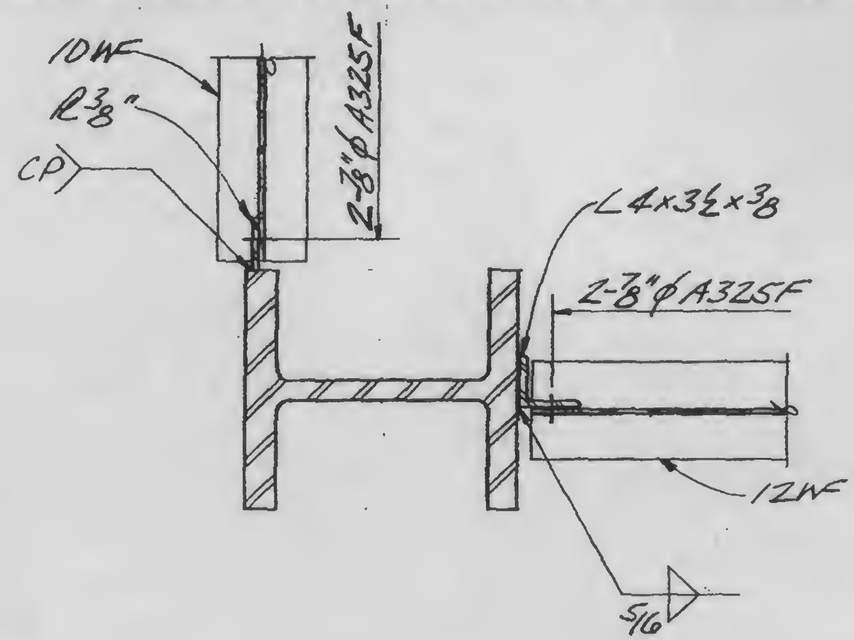

A

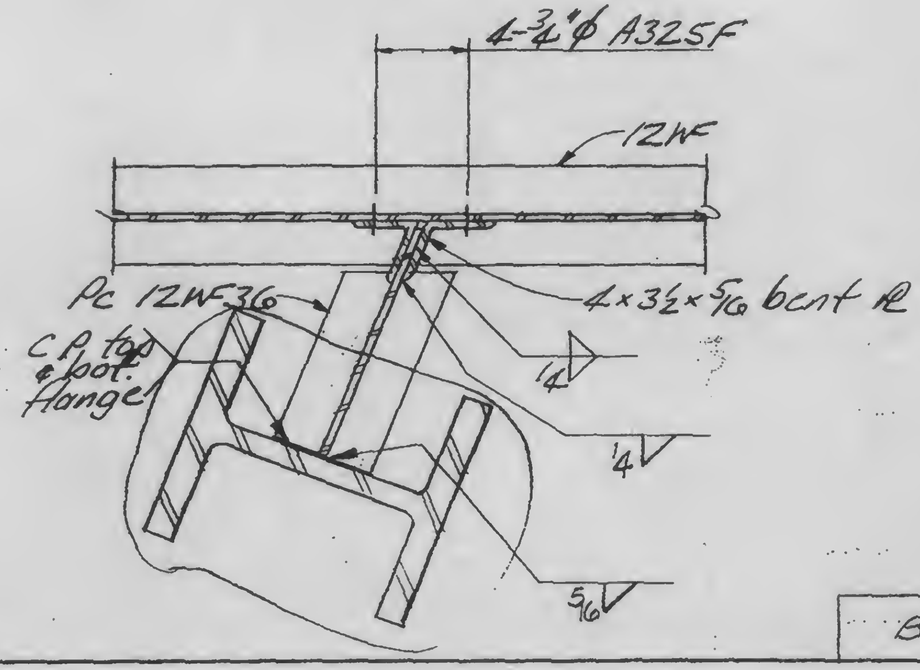

B

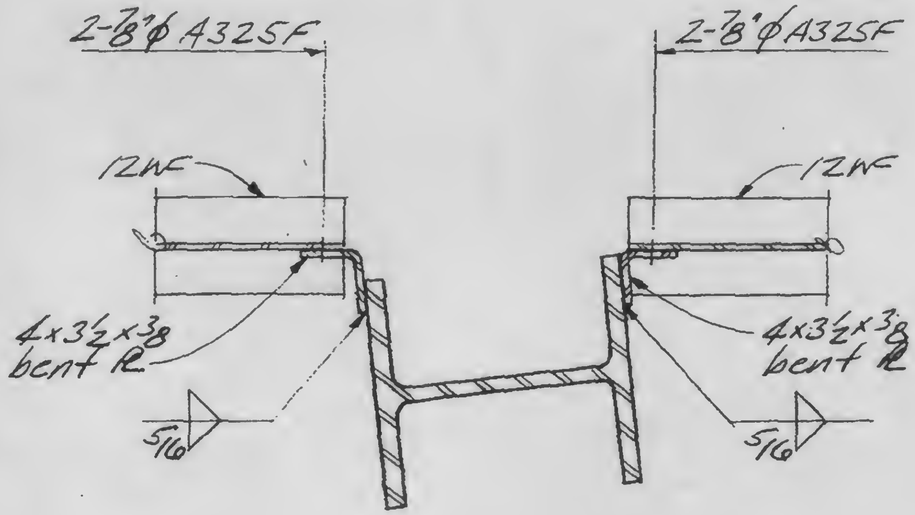

C

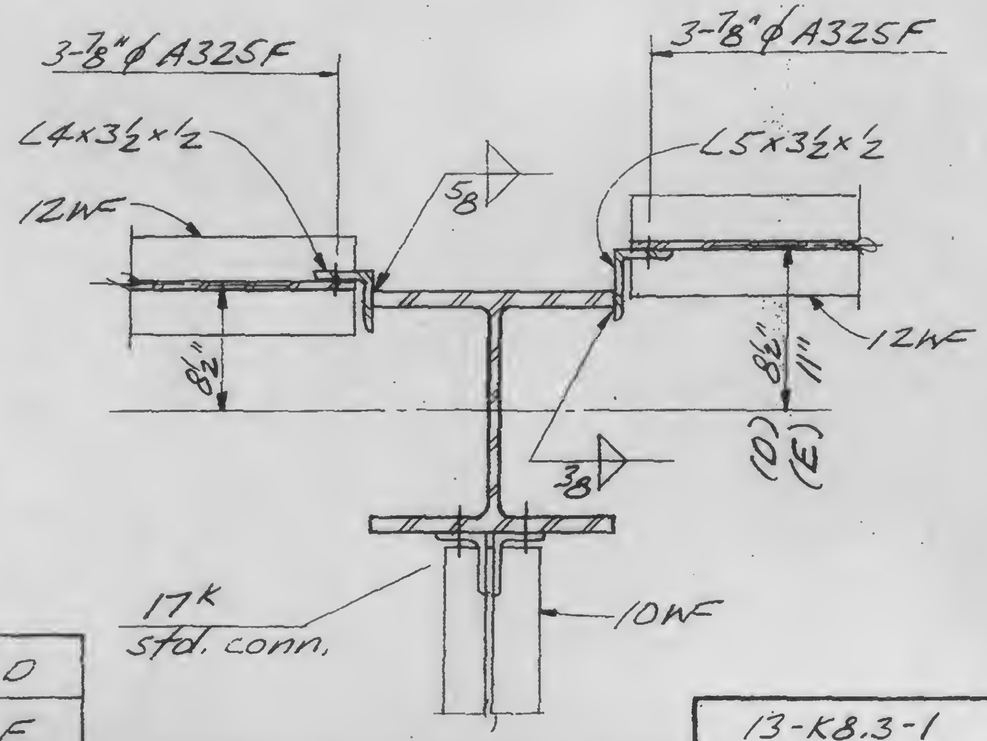

D

E

13-K8.3-1

LICENSED PROFESSIONAL ENGINEER — LESLIE E. ROBERTSON — No. 34360 — UNIVERSITY OF THE STATE OF NEW YORK

DESIGNED

DRAWN

REVIEWED

SKILLING, HELLE, CHRISTIANSEN, ROBERTSON — Structural & Civil Engineers

PROJECT: THE WORLD TRADE CENTER

TITLE: CONNECTION DETAILS INTERMEDIATE LEVEL

DATE: 11-3-72

REVISIONS

Released for construction 11-24-72

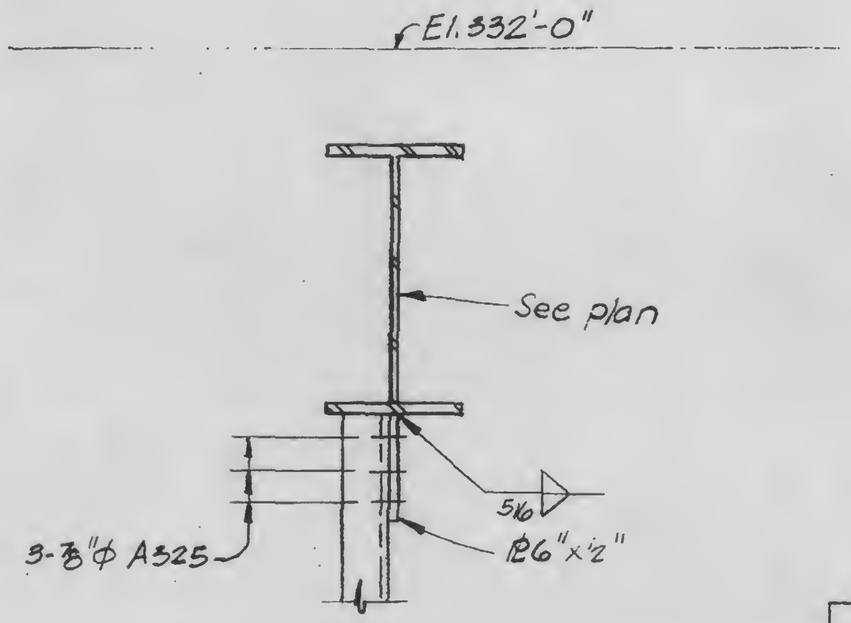

A

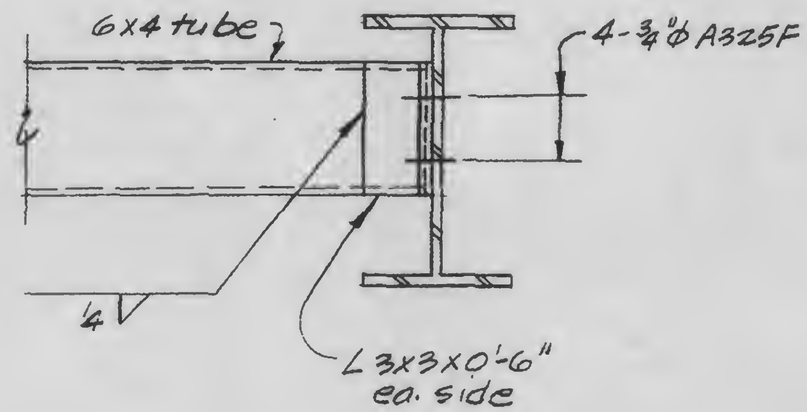

C

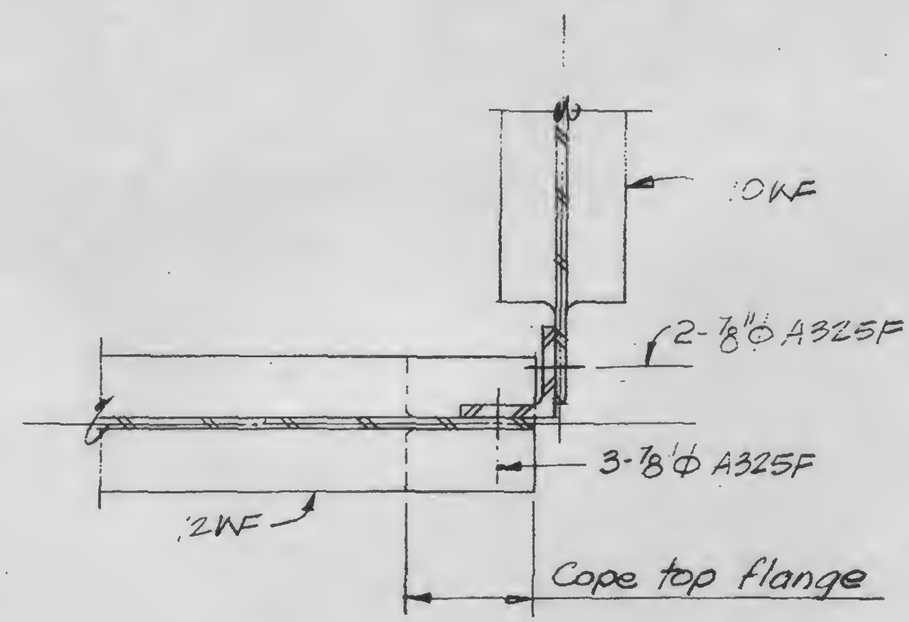

B

13-K8.3-2

LICENSED PROFESSIONAL ENGINEER
LESLIE E. ROBERTSON
No. 34360
UNIVERSITY OF THE STATE OF NEW YORK

DESIGNED

DRAWN

REVIEWED

SKILLING, HELLE, CHRISTIANSEN, ROBERTSON — Structural & Civil Engineers

PROJECT: THE WORLD TRADE CENTER

TITLE: INTERMEDIATE LEVEL DETAILS

DATE: 11-24-72

REVISIONS

Released for construction 11-24-72

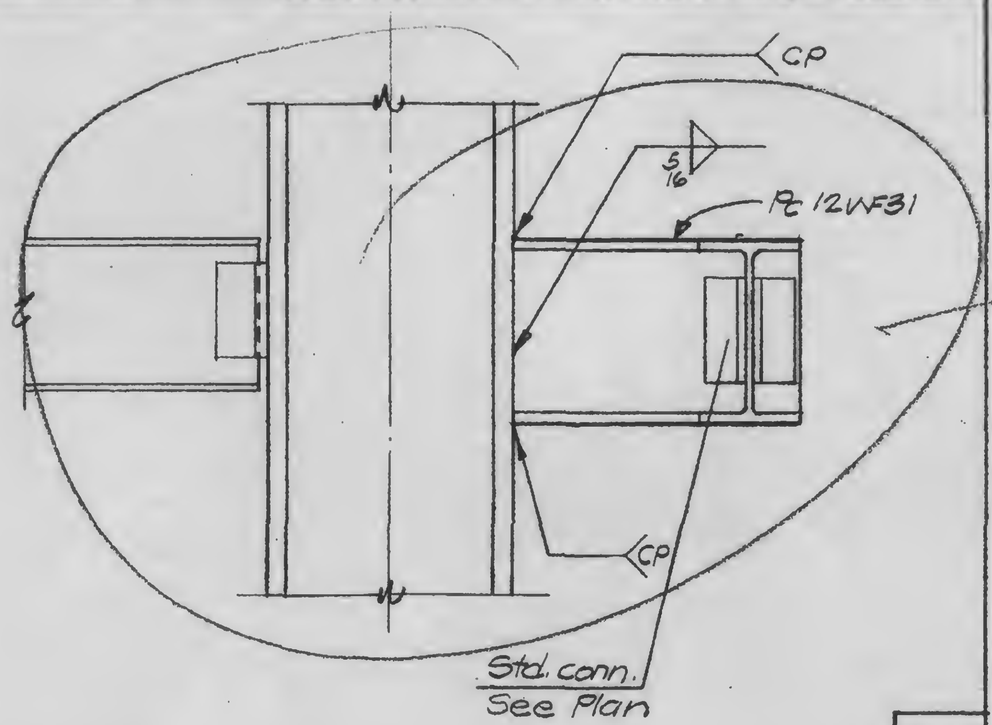

A

Col. turned 90°

See Levinson shop dwg. V3256, Sect. X

LICENSED PROFESSIONAL ENGINEER
LESLIE E. ROBERTSON
No 34360
UNIVERSITY OF THE STATE OF NEW YORK

DESIGNED

DRAWN

REVIEWED

13-K8.3-3

SKILLING, HELLE, CHRISTIANSEN, ROBERTSON — Structural & Civil Engineers

PROJECT: THE WORLD TRADE CENTER

TITLE: INTERMEDIATE LEVEL DETAILS

DATE: 11-24-72

REVISIONS

Released for construction 11-24-72

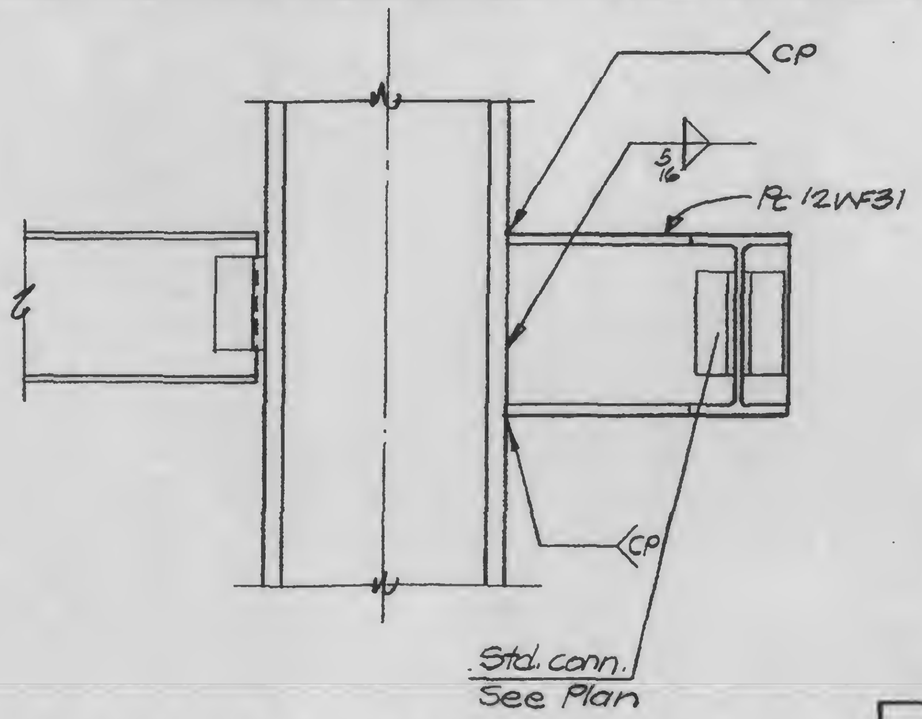

A

LICENSED PROFESSIONAL ENGINEER
LESLIE E. ROBERTSON
No. 34360
UNIVERSITY OF THE STATE OF NEW YORK

DESIGNED

DRAWN

REVIEWED

13-K8.3-3

SKILLING, HELLE, CHRISTIANSEN, ROBERTSON — Structural & Civil Engineers

PROJECT: THE WORLD TRADE CENTER

TITLE: BRACING 310-332 ELEVATIONS

DATE: 11-3-72

REVISIONS

Released for construction 11-20-72

12-11-72

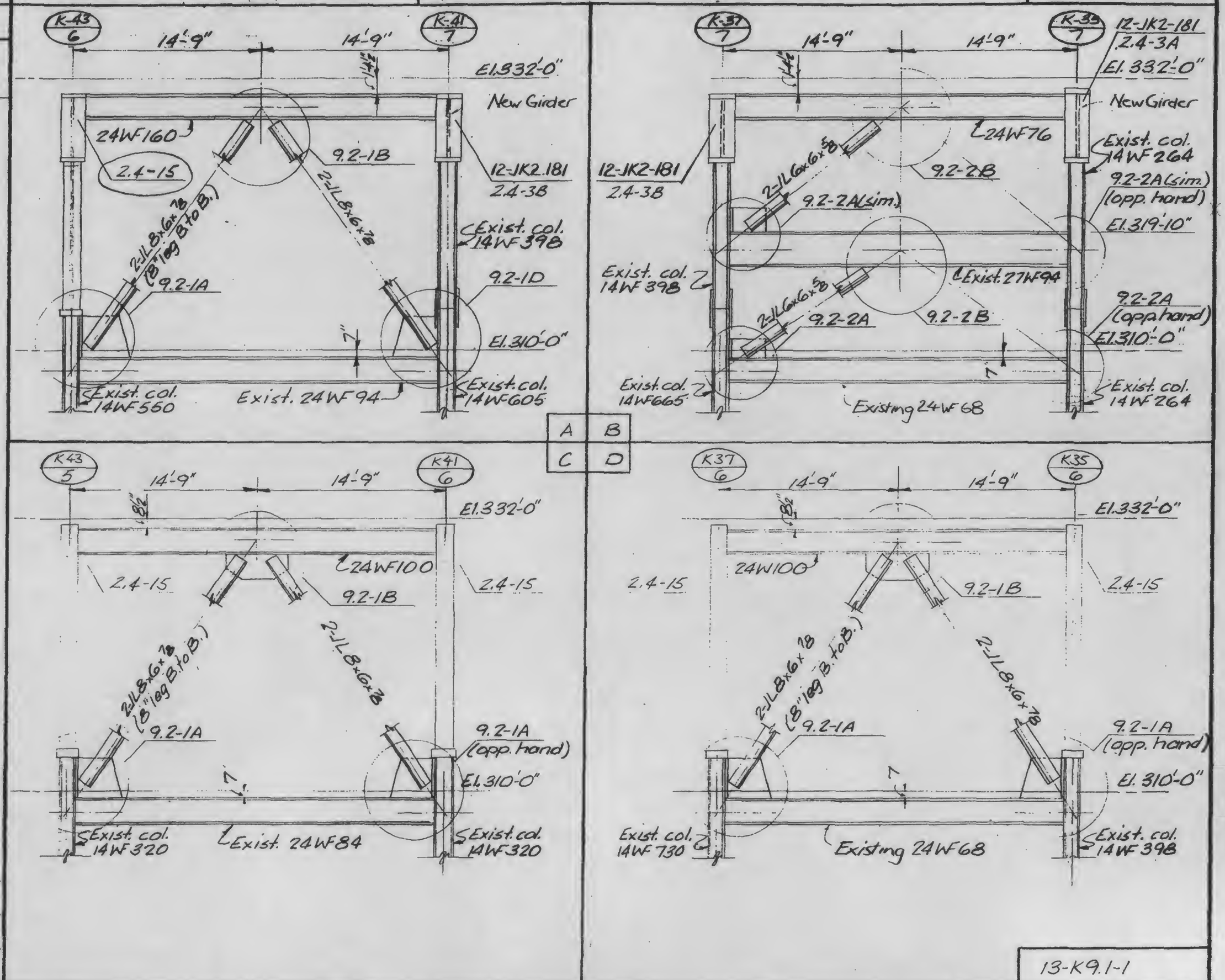

LICENSED PROFESSIONAL ENGINEER — LESLIE E. ROBERTSON — No. 34360 — UNIVERSITY OF THE STATE OF NEW YORK

DESIGNED

DRAWN J Banks

REVIEWED

13-K9.1-1

SKILLING, HELLE, CHRISTIANSEN, ROBERTSON — Structural & Civil Engineers

PROJECT: THE WORLD TRADE CENTER

TITLE: BRACING 310-332 ELEVATIONS

DATE: 11-3-72

REVISIONS

Released for construction 11-20-72

4-20-73

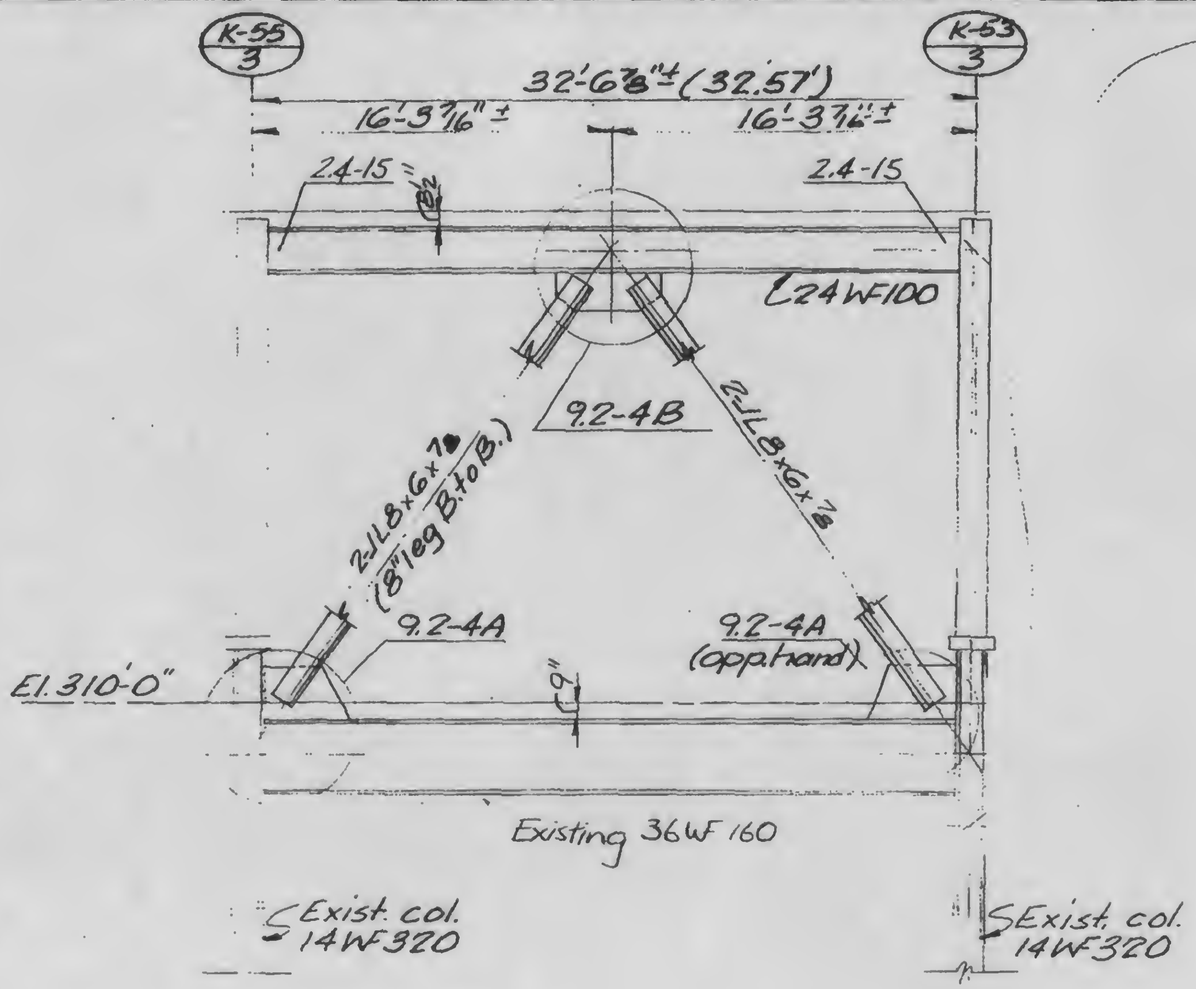

LICENSED PROFESSIONAL ENGINEER
LESLIE E. ROBERTSON
No 34360
UNIVERSITY OF THE STATE OF NEW YORK

DESIGNED

DRAWN
Banks

REVIEWED

13-K9.1-2

SKILLING, HELLE, CHRISTIANSEN, ROBERTSON — Structural & Civil Engineers

PROJECT: THE WORLD TRADE CENTER

TITLE: BRACING 310-332 DETAILS

DATE: 11-3-72

REVISIONS

Released for construction 11-20-72

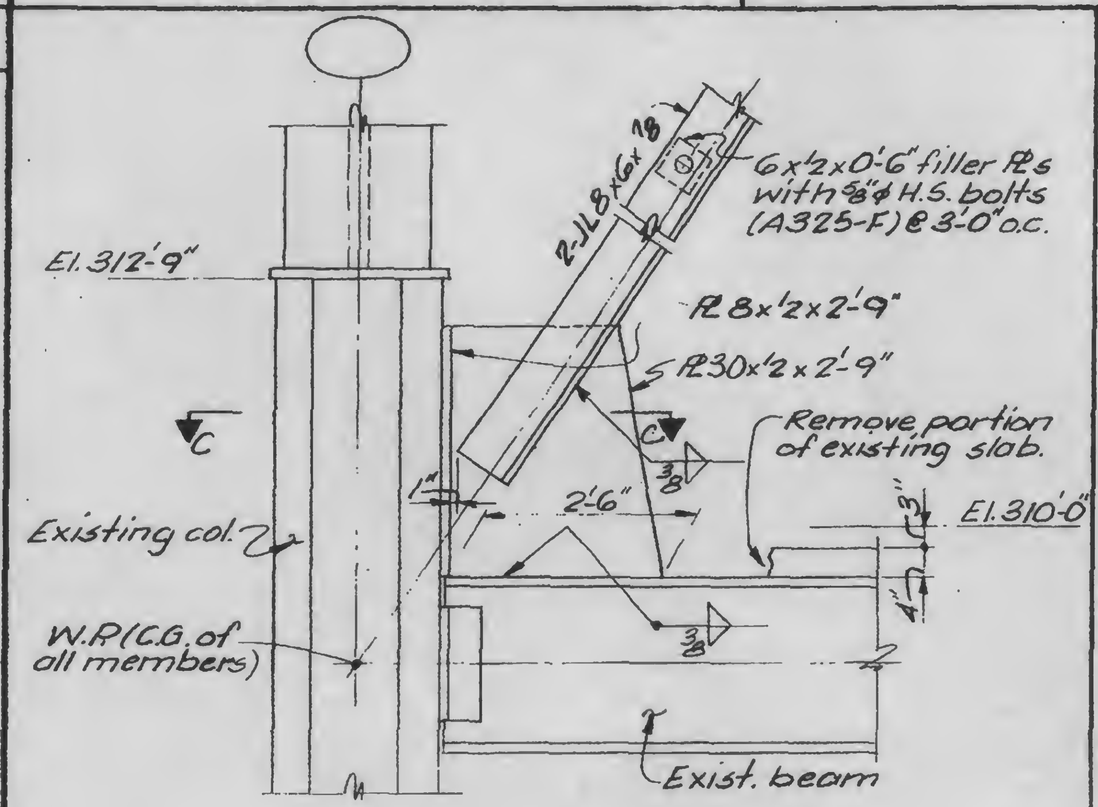

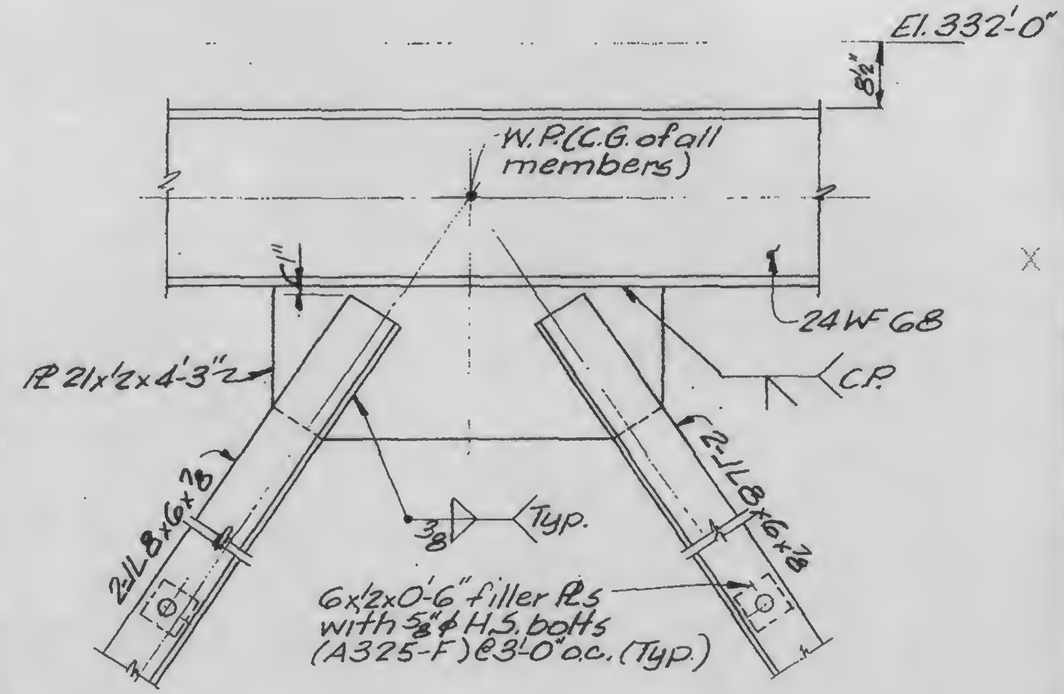

A	B
C	D

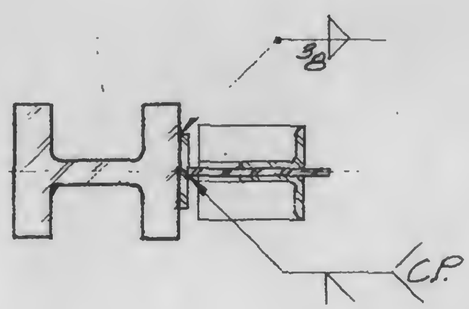

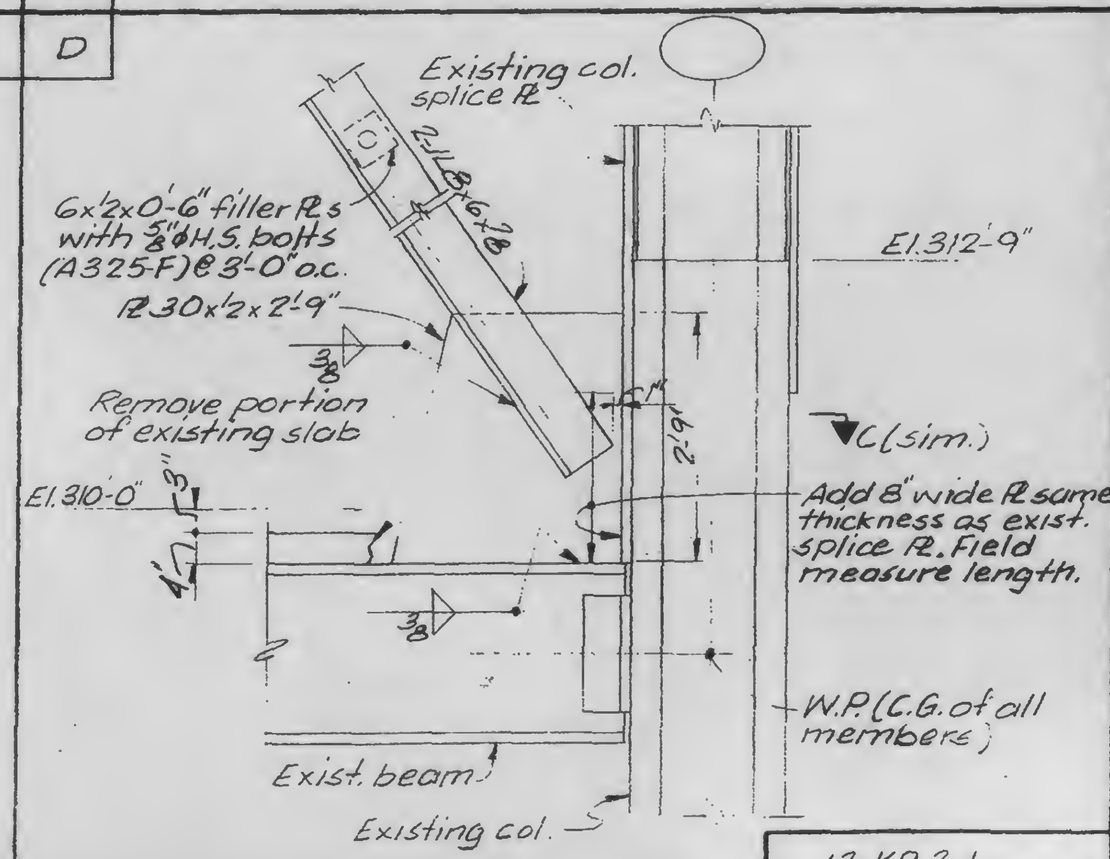

13-K9.2-1

LICENSED PROFESSIONAL ENGINEER — LESLIE E. ROBERTSON — No. 34360 — UNIVERSITY OF THE STATE OF NEW YORK

DESIGNED

DRAWN: TR

REVIEWED

SKILLING, HELLE, CHRISTIANSEN, ROBERTSON — Structural & Civil Engineers

PROJECT: THE WORLD TRADE CENTER

TITLE: BRACING 310-332 DETAILS

DATE: 11-3-72

REVISIONS

Released for construction 11-20-72

4-20-73

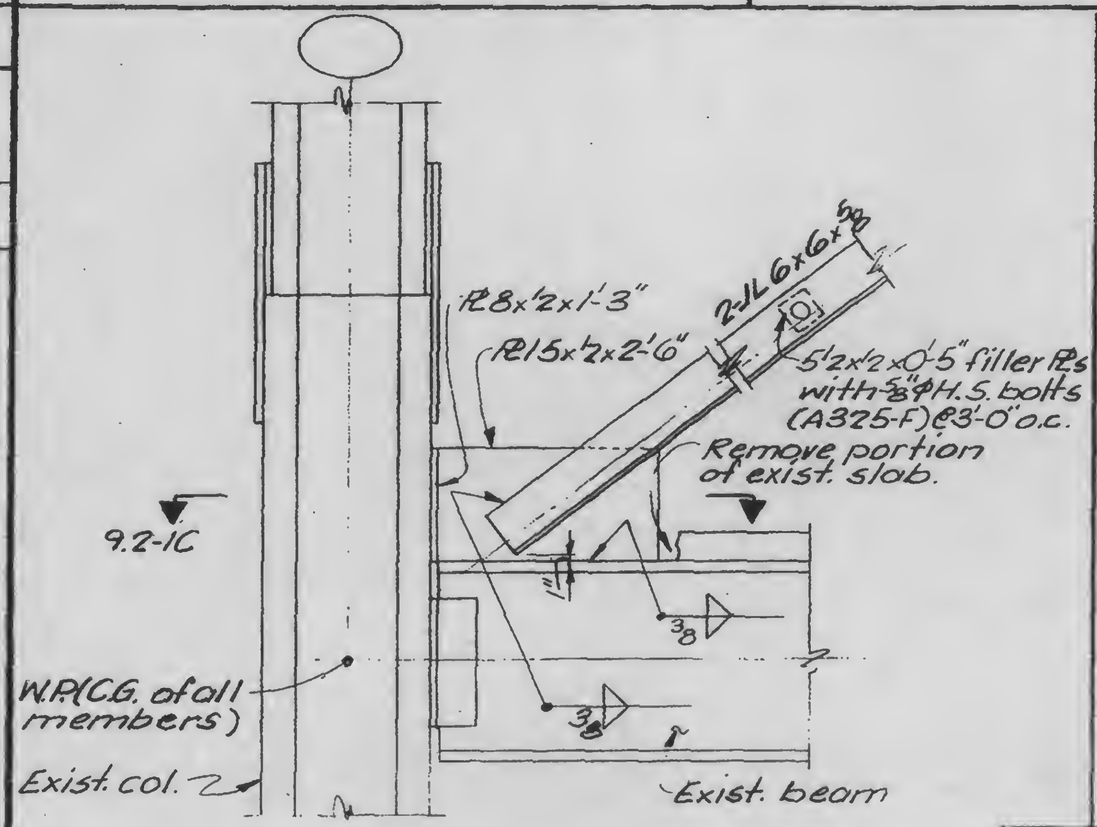

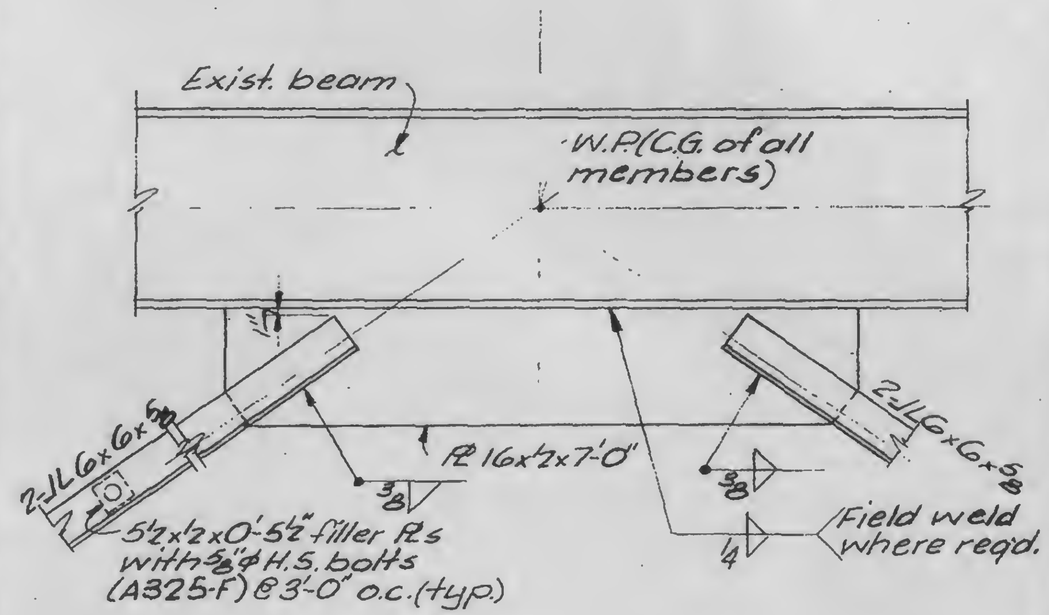

A | B

LICENSED PROFESSIONAL ENGINEER — LESLIE E. ROBERTSON — No. 34360 — UNIVERSITY OF THE STATE OF NEW YORK

DESIGNED

DRAWN TR

REVIEWED

13-K9.2-2

SKILLING, HELLE, CHRISTIANSEN, ROBERTSON — Structural & Civil Engineers

PROJECT: THE WORLD TRADE CENTER | TITLE: BRACING 310-332 DETAILS | DATE: 11-3-72

REVISIONS

Released for construction 11-20-72

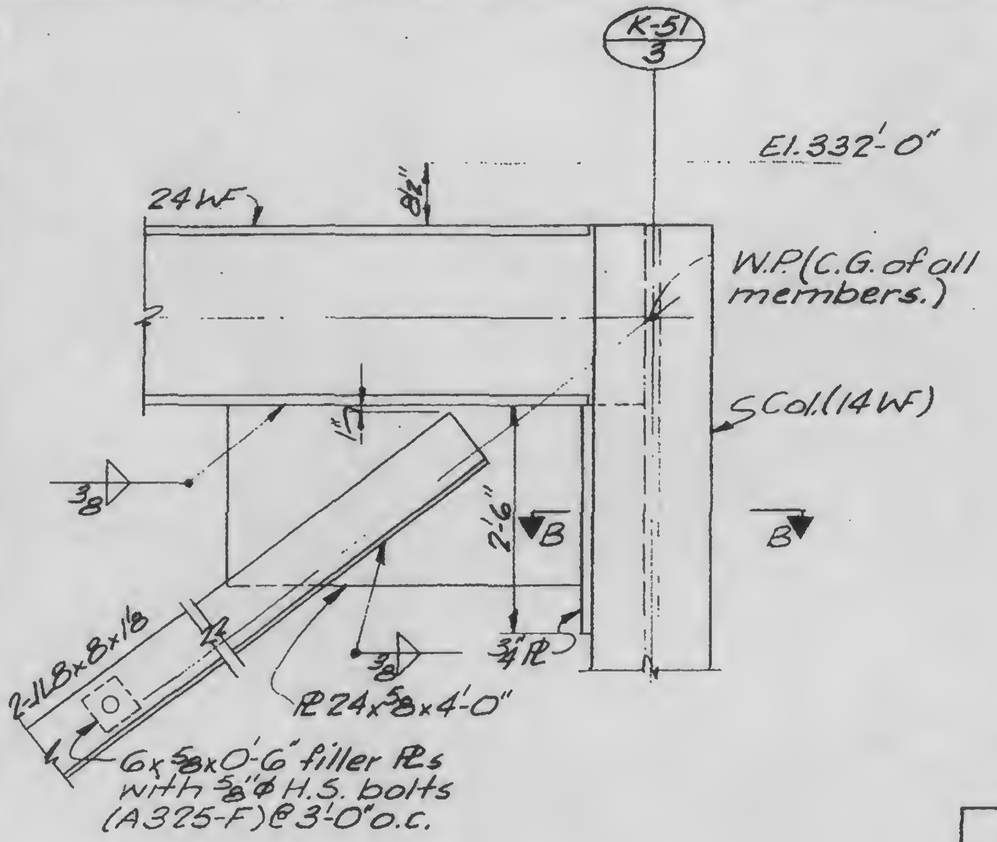

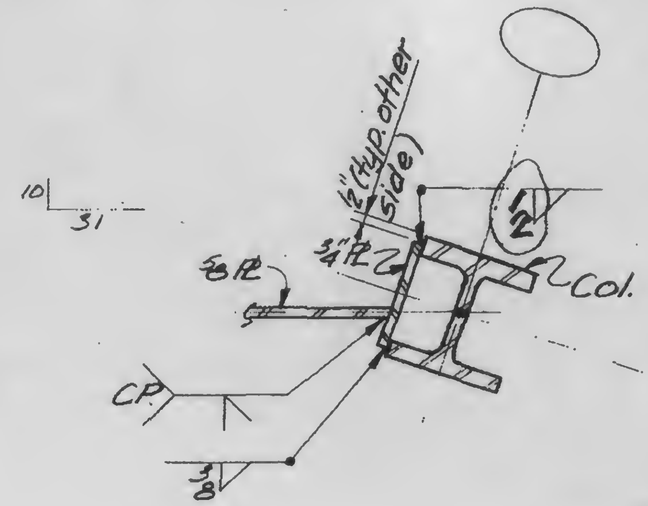

A	B
C	D

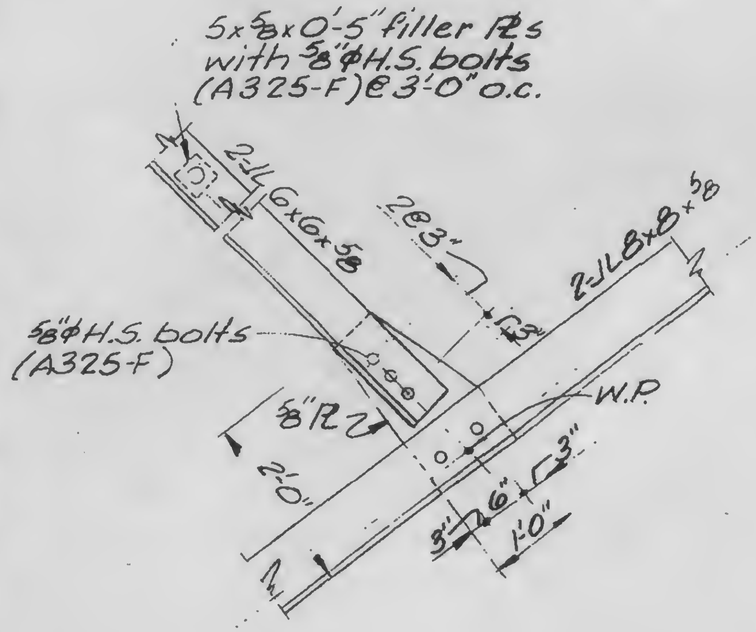

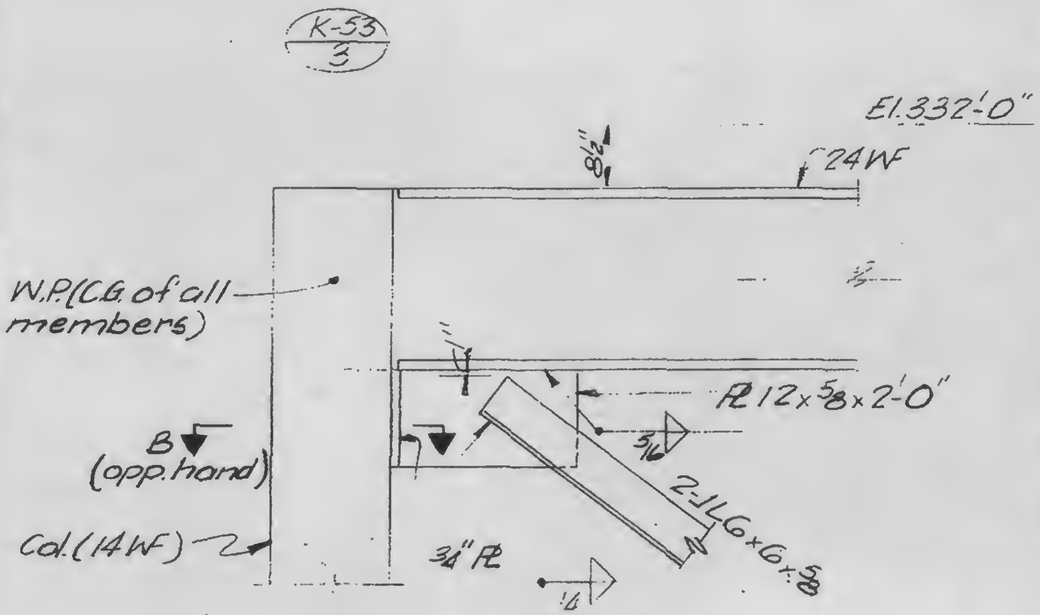

LICENSED PROFESSIONAL ENGINEER — LESLIE E. ROBERTSON — No. 34360 — UNIVERSITY OF THE STATE OF NEW YORK

DESIGNED

DRAWN: TR

REVIEWED

13-K9.2-3

SKILLING, HELLE, CHRISTIANSEN, ROBERTSON — Structural & Civil Engineers

PROJECT: THE WORLD TRADE CENTER

TITLE: BRACING 310-332 DETAILS

DATE: 11-3-72

REVISIONS

Released for construction 11-20-72

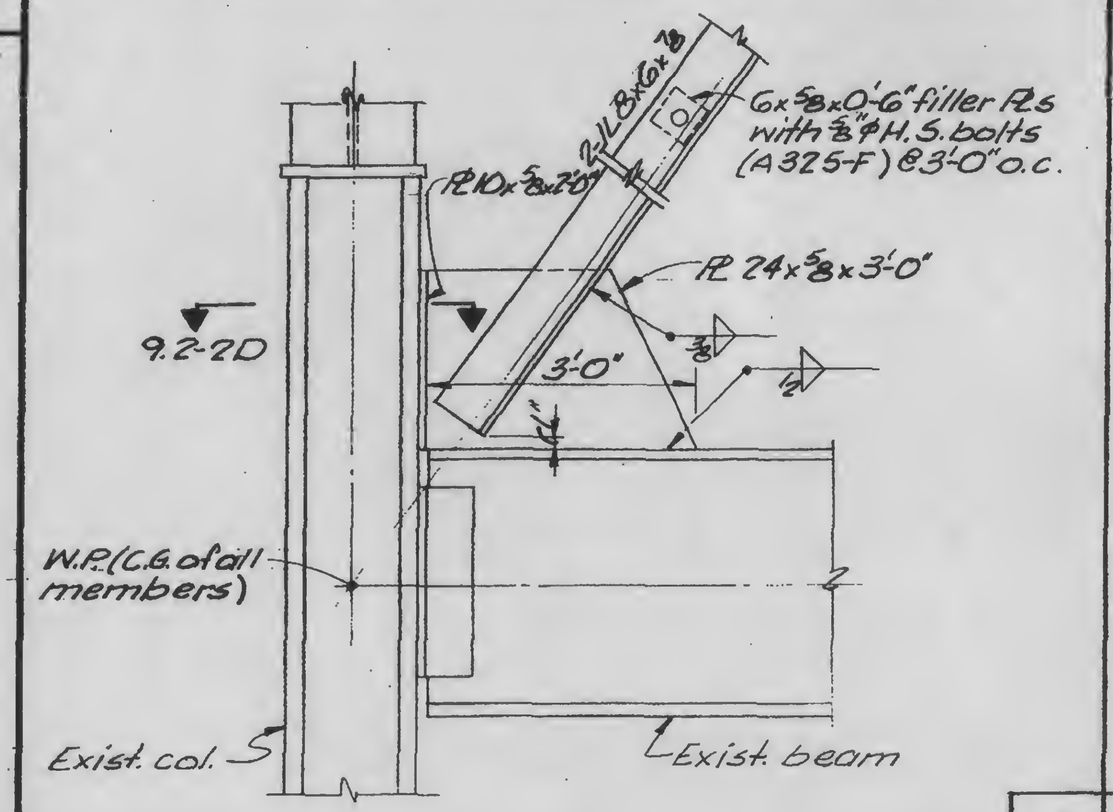

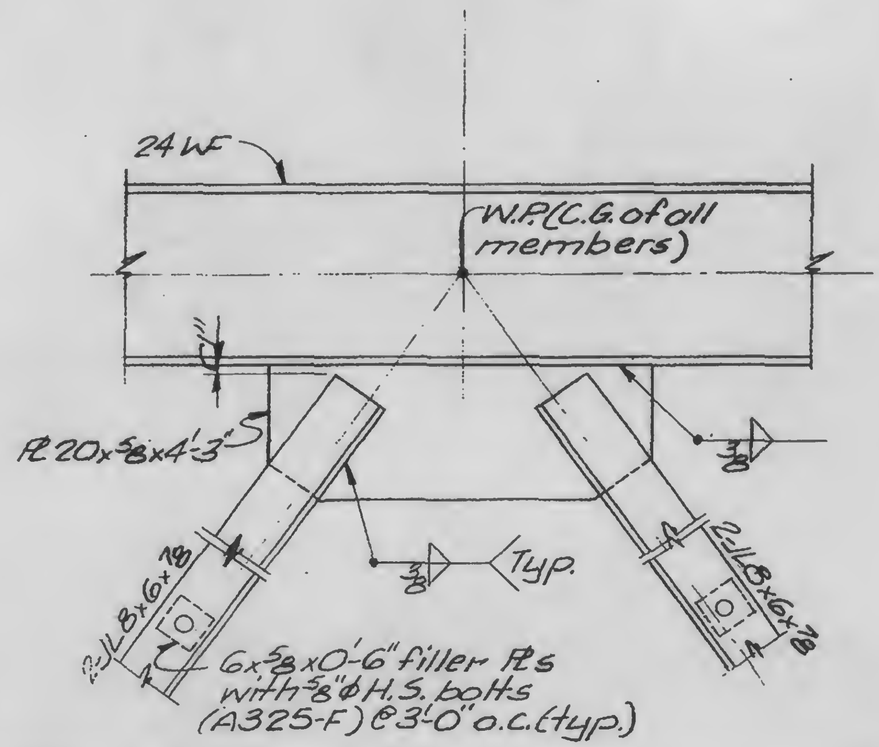

A	B

LICENSED PROFESSIONAL ENGINEER — LESLIE E. ROBERTSON — No. 34360 — UNIVERSITY OF THE STATE OF NEW YORK

DESIGNED

DRAWN TR

REVIEWED

13-K 9.2-4

SKILLING, HELLE, CHRISTIANSEN, ROBERTSON — Structural & Civil Engineers

PROJECT: THE WORLD TRADE CENTER

TITLE: NOTCH & NEW SUPPORT FOR EXIST. BEAMS-ELEVATION

DATE: 3-15-73

REVISIONS

5-7-73

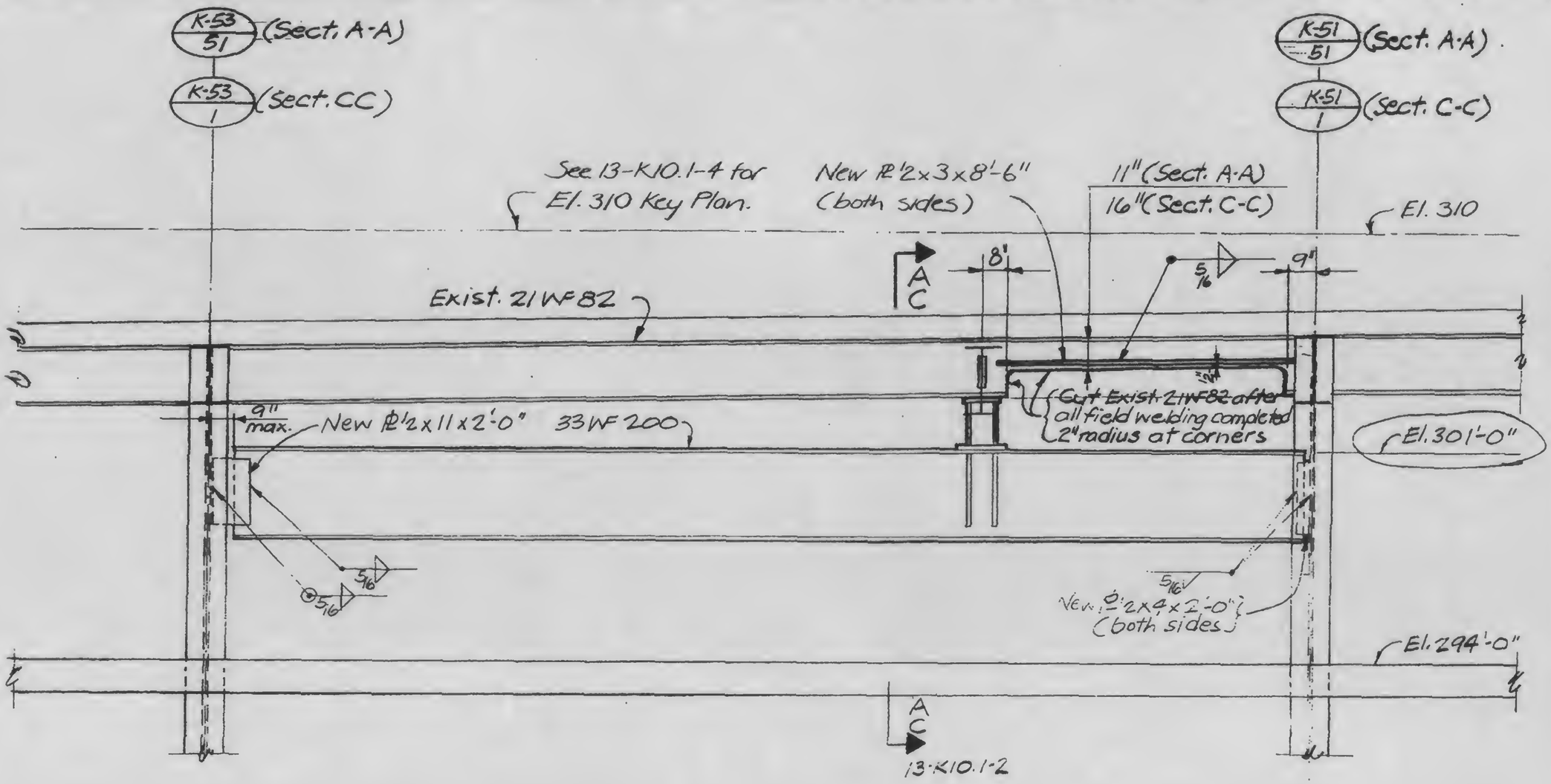

LICENSED PROFESSIONAL ENGINEER — LESLIE E. ROBERTSON — No. 34360 — UNIVERSITY OF THE STATE OF NEW YORK

DESIGNED: JTM

DRAWN: [illegible]

REVIEWED

A C

13-K10.1-1

SKILLING, HELLE, CHRISTIANSEN, ROBERTSON — Structural & Civil Engineers

PROJECT: THE WORLD TRADE CENTER

TITLE: NOTCH & NEW SUPPORT FOR EXIST. BEAMS – SECTIONS

DATE: 3-15-73

REVISIONS

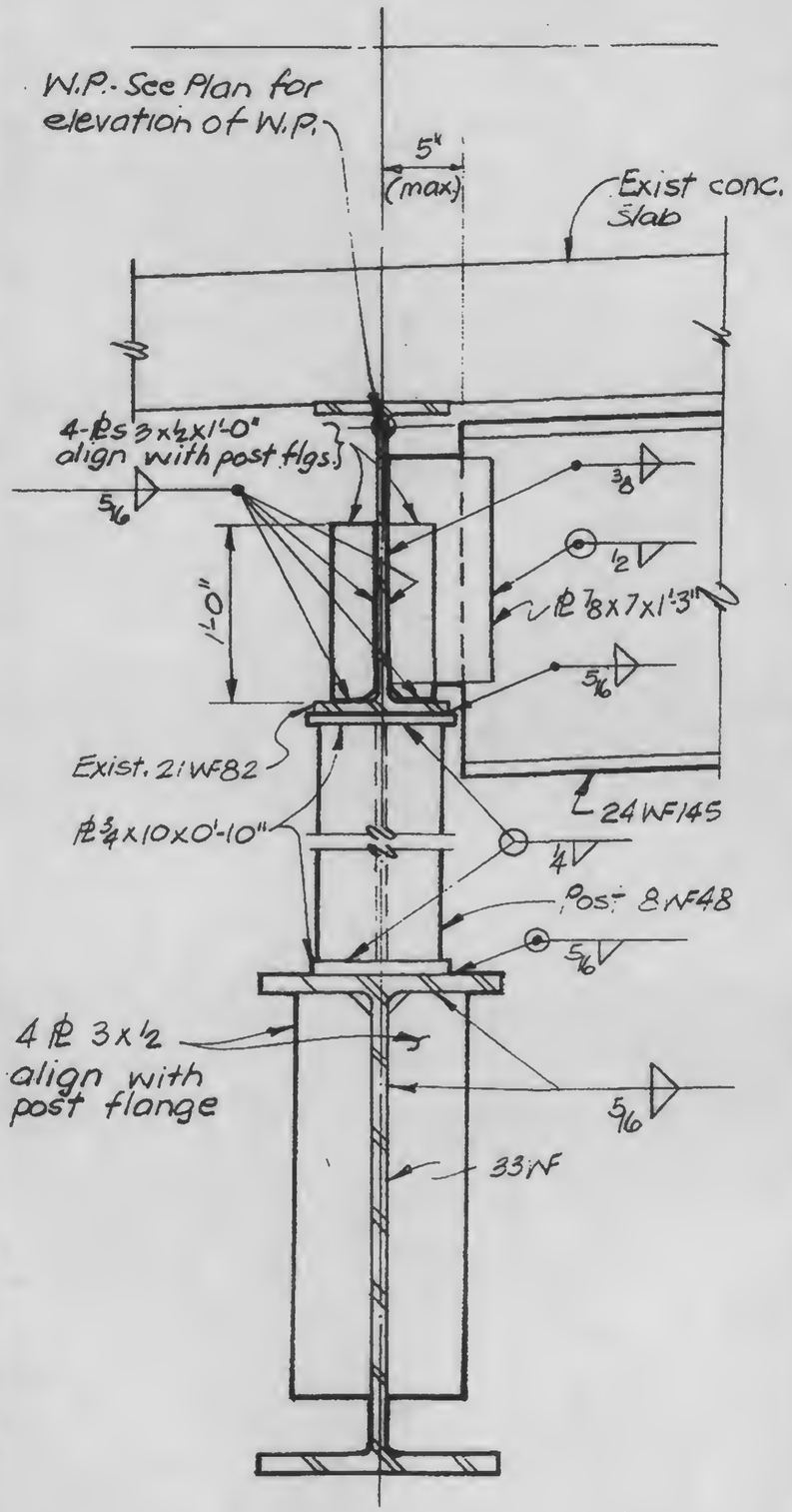

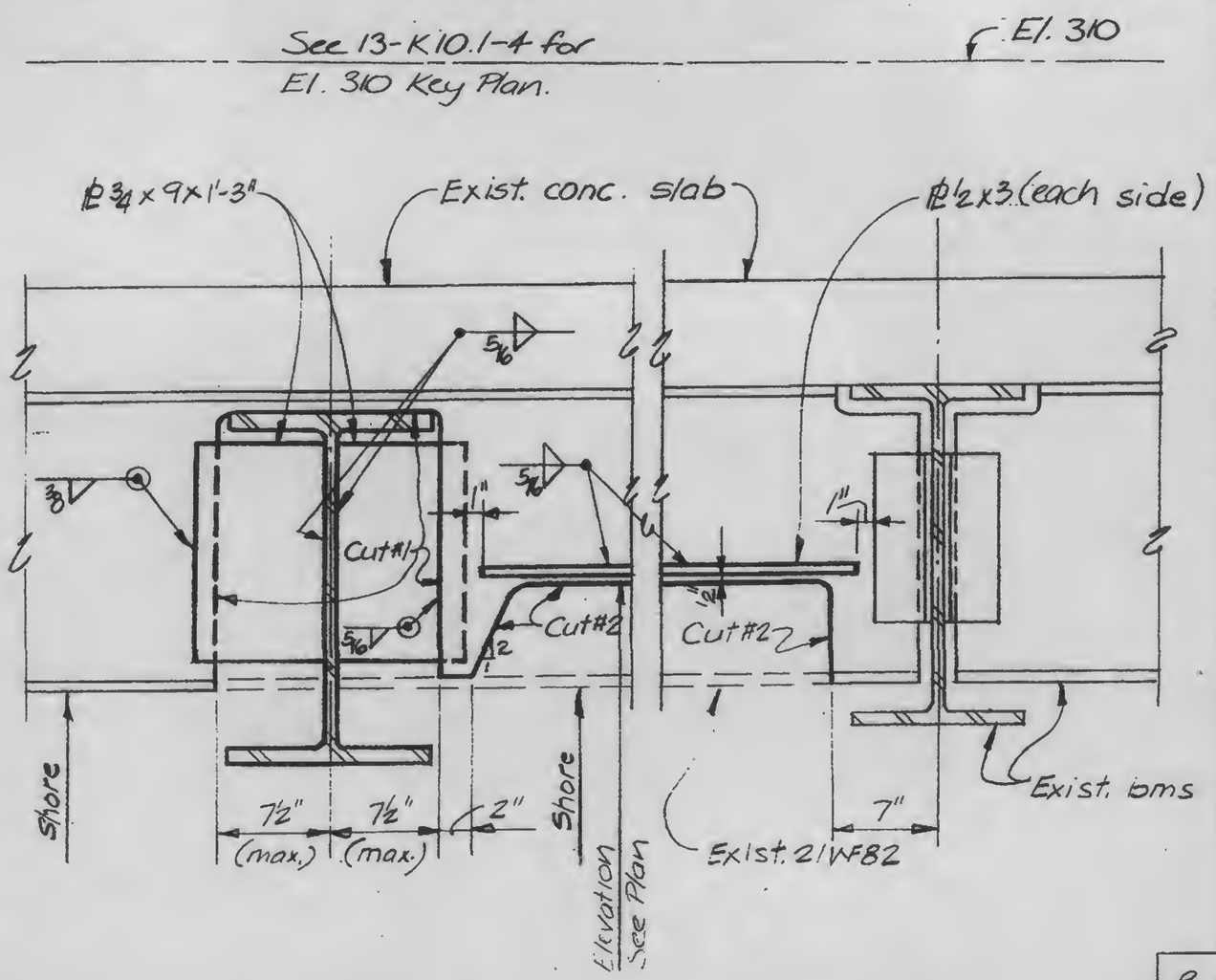

B

Construction Sequence

1. Place shores.
2. Make cut #1 (1" radius at corners)
3. Complete all steel erection and field welding.
4. Remove shores.
5. Make cut #2 (2" radius at corners)

A

opp. hand. G

LICENSED PROFESSIONAL ENGINEER — LESLIE E. ROBERTSON — No. 34360 — UNIVERSITY OF THE STATE OF NEW YORK

DESIGNED: JTM

DRAWN: PU Ozdali

REVIEWED

13-K10.1-2

SKILLING, HELLE, CHRISTIANSEN, ROBERTSON — Structural & Civil Engineers

PROJECT: THE WORLD TRADE CENTER

TITLE: NOTCH & NEW SUPPORT FOR EXIST. BEAM - SECTION

DATE: 3-15-73

REVISIONS

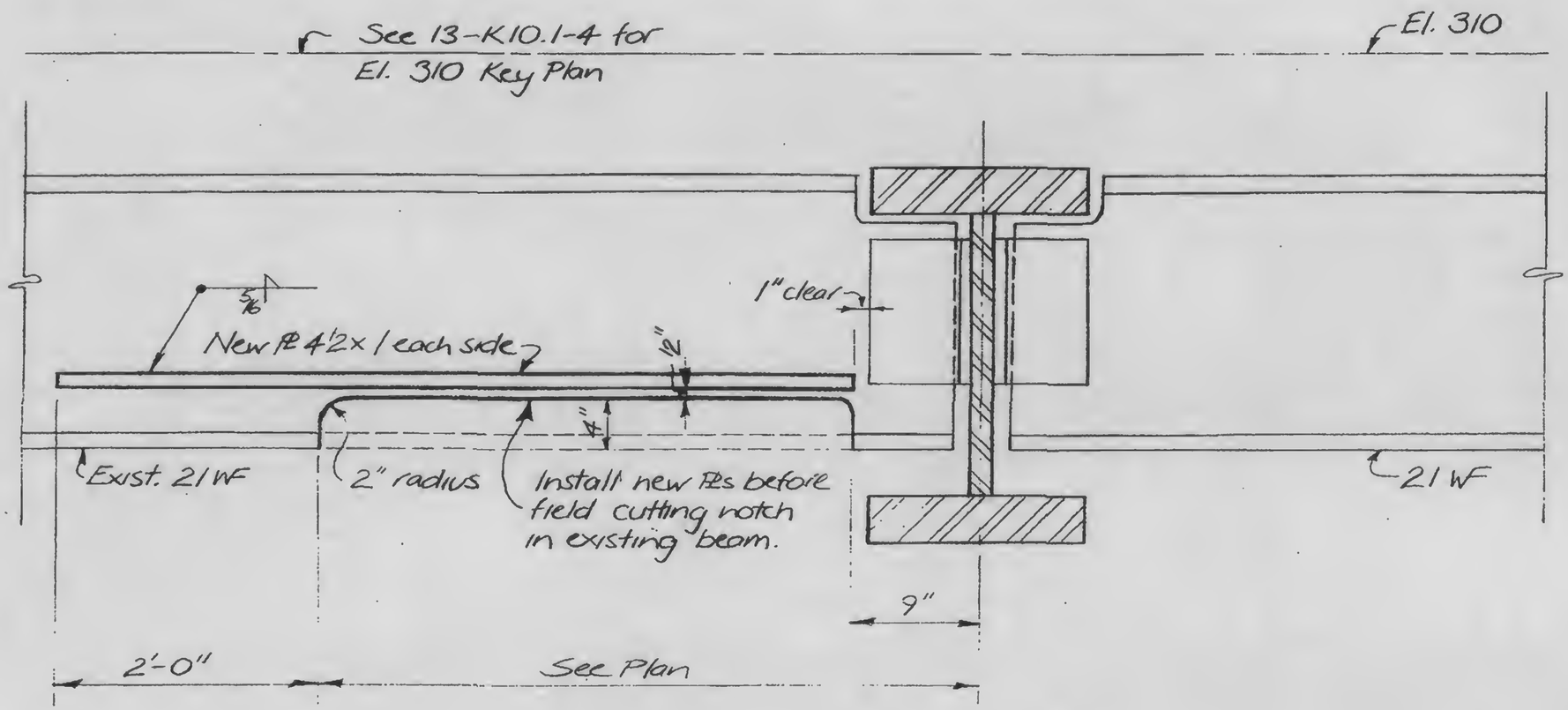

LICENSED PROFESSIONAL ENGINEER
LESLIE E. ROBERTSON
No. 34360
UNIVERSITY OF THE STATE OF NEW YORK

DESIGNED

DRAWN

REVIEWED

13-K10.1-3

SKILLING, HELLE, CHRISTIANSEN, ROBERTSON — Structural & Civil Engineers

PROJECT: THE WORLD TRADE CENTER

TITLE: NOTCH & NEW SUPPORT FOR EXIST. BEAMS - KEY PLAN EL 310

DATE: 3-15-73

REVISIONS

LICENSED PROFESSIONAL ENGINEER — LESLIE E. ROBERTSON — No. 34360 — UNIVERSITY OF THE STATE OF NEW YORK

DESIGNED

DRAWN J Bank

REVIEWED

13-K10.1-4

SKILLING, HELLE, CHRISTIANSEN, ROBERTSON — Structural & Civil Engineers

PROJECT: THE WORLD TRADE CENTER

TITLE: SECTION AT ESCALATOR - EL. 294'-0"

DATE: 3-15-73

REVISIONS

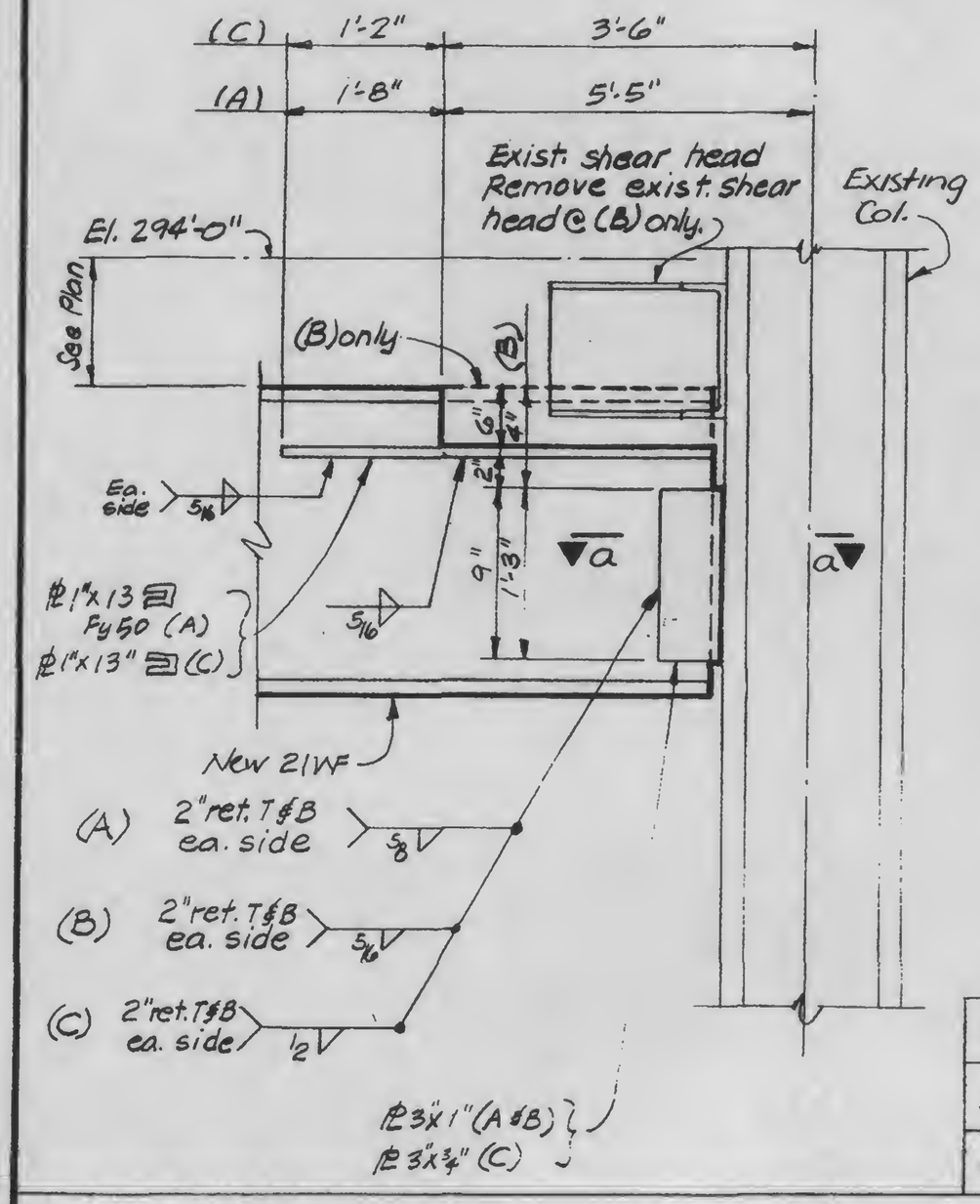

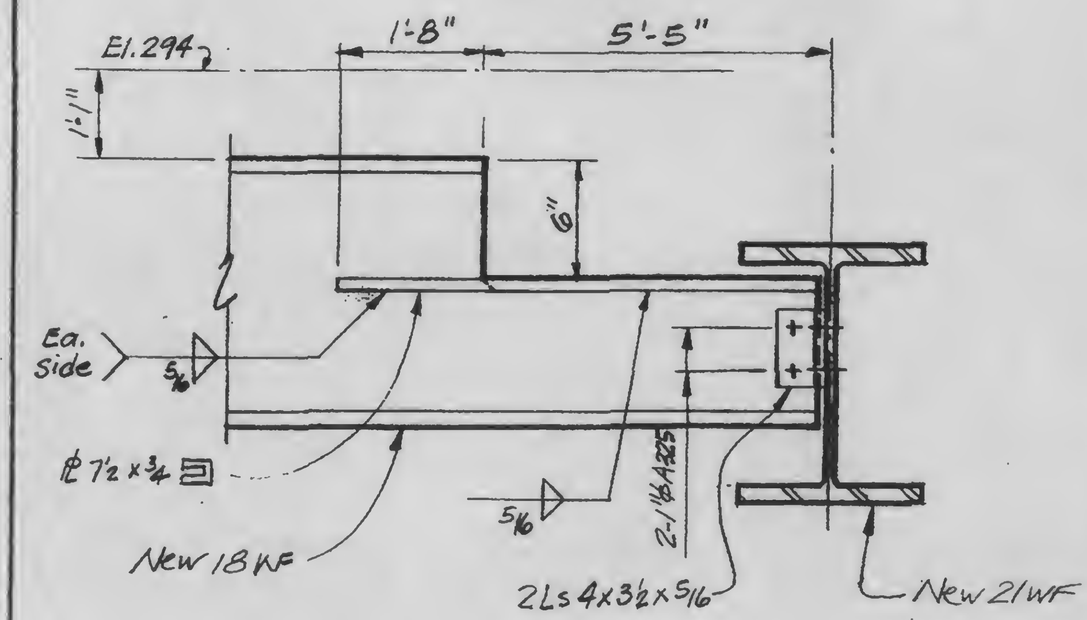

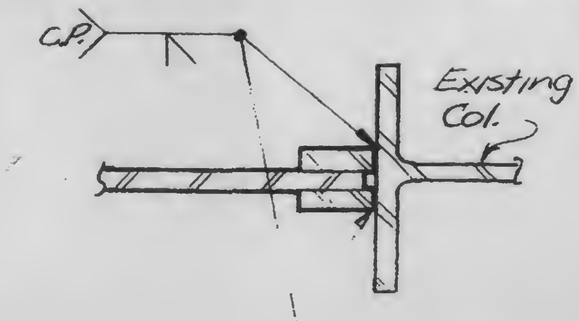

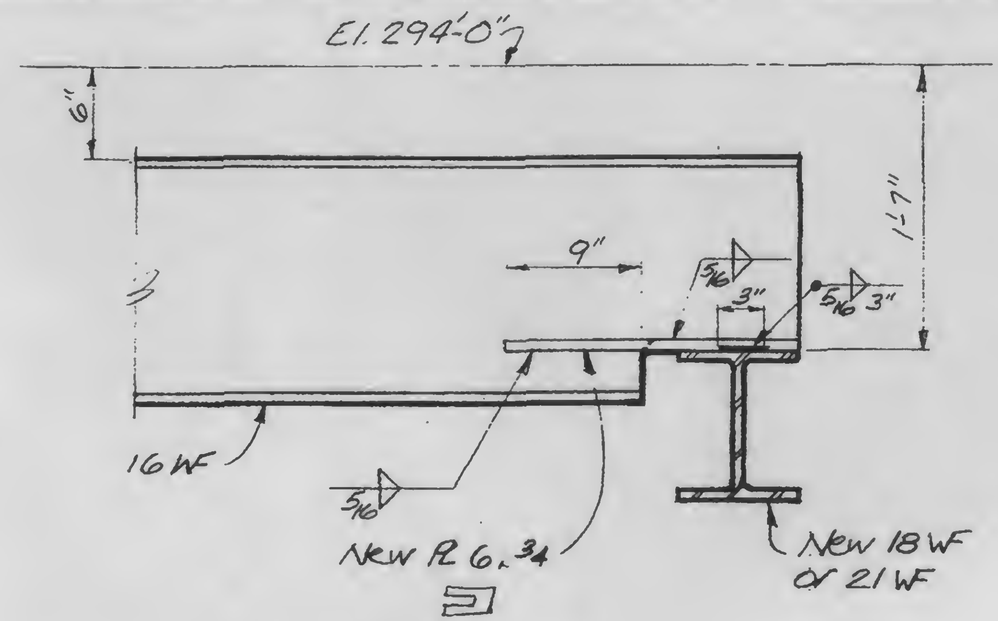

LICENSED PROFESSIONAL ENGINEER — LESLIE E. ROBERTSON — No. 34360 — UNIVERSITY OF THE STATE OF NEW YORK

DESIGNED: KC

DRAWN: [illegible]

REVIEWED

13-K10.2-1

SKILLING, HELLE, CHRISTIANSEN, ROBERTSON — Structural & Civil Engineers

PROJECT: THE WORLD TRADE CENTER

TITLE: SECTION AT ESCALATOR - EL. 294'-0"

DATE: 3-15-73

REVISIONS

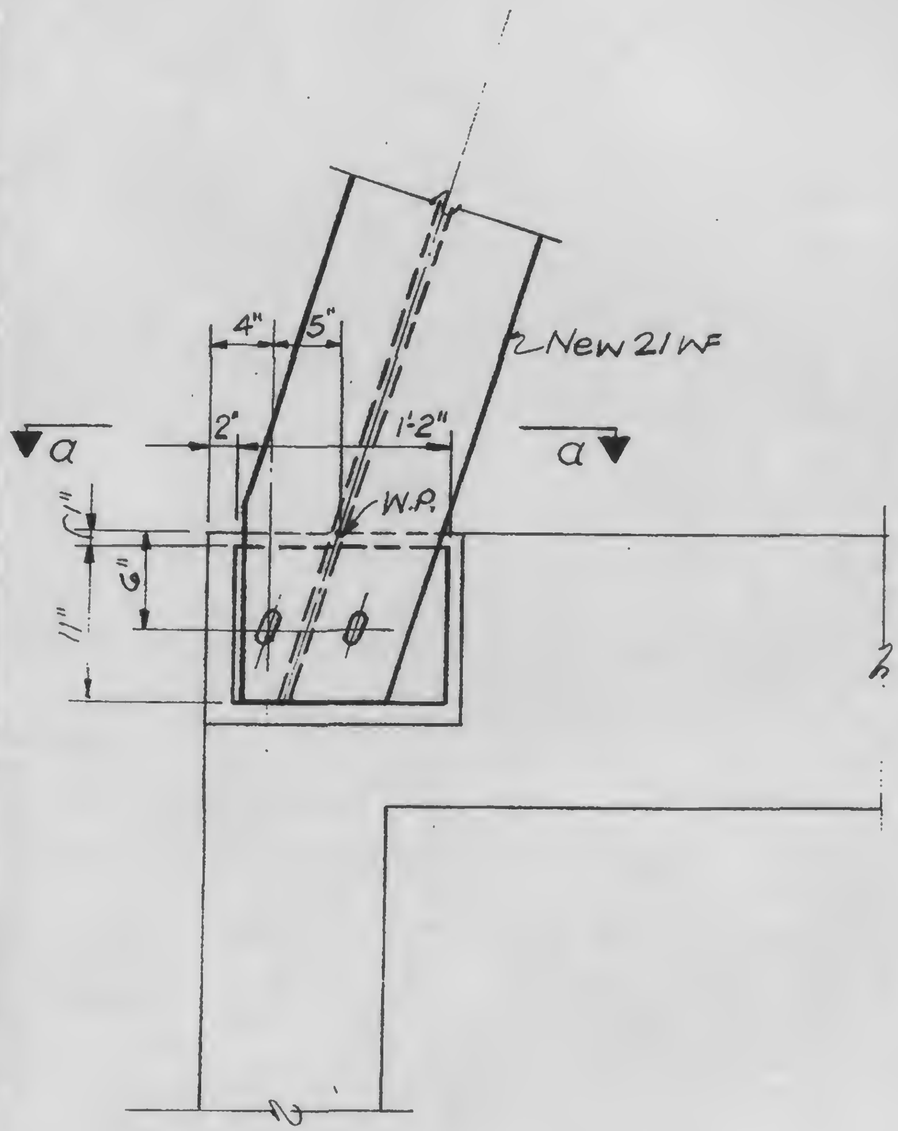

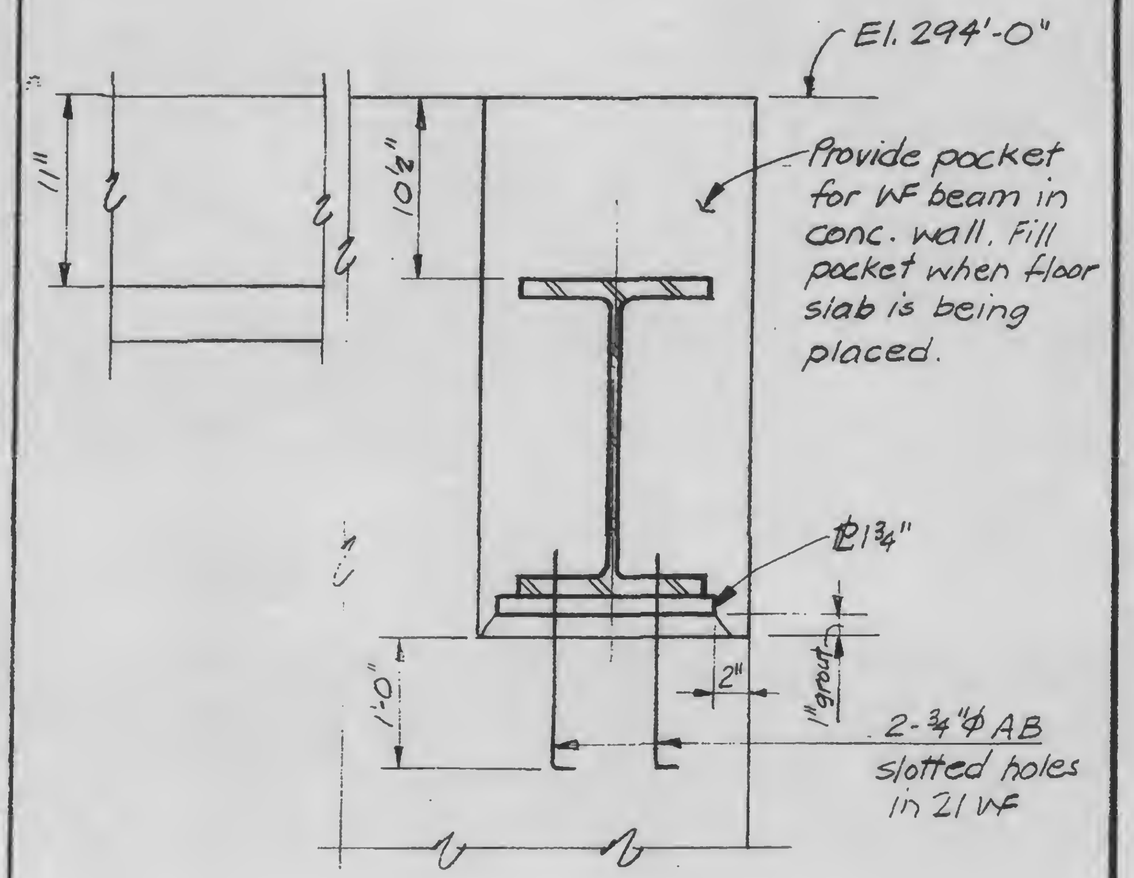

LICENSED PROFESSIONAL ENGINEER
LESLIE E. ROBERTSON
No. 34360
UNIVERSITY OF THE STATE OF NEW YORK

DESIGNED: KC

DRAWN:

REVIEWED:

a

13-K10.2-2

SKILLING, HELLE, CHRISTIANSEN, ROBERTSON — Structural & Civil Engineers

PROJECT: THE WORLD TRADE CENTER

TITLE: DETAIL AT COL. H5/2 - EL. 284

DATE: 3-15-73

REVISIONS

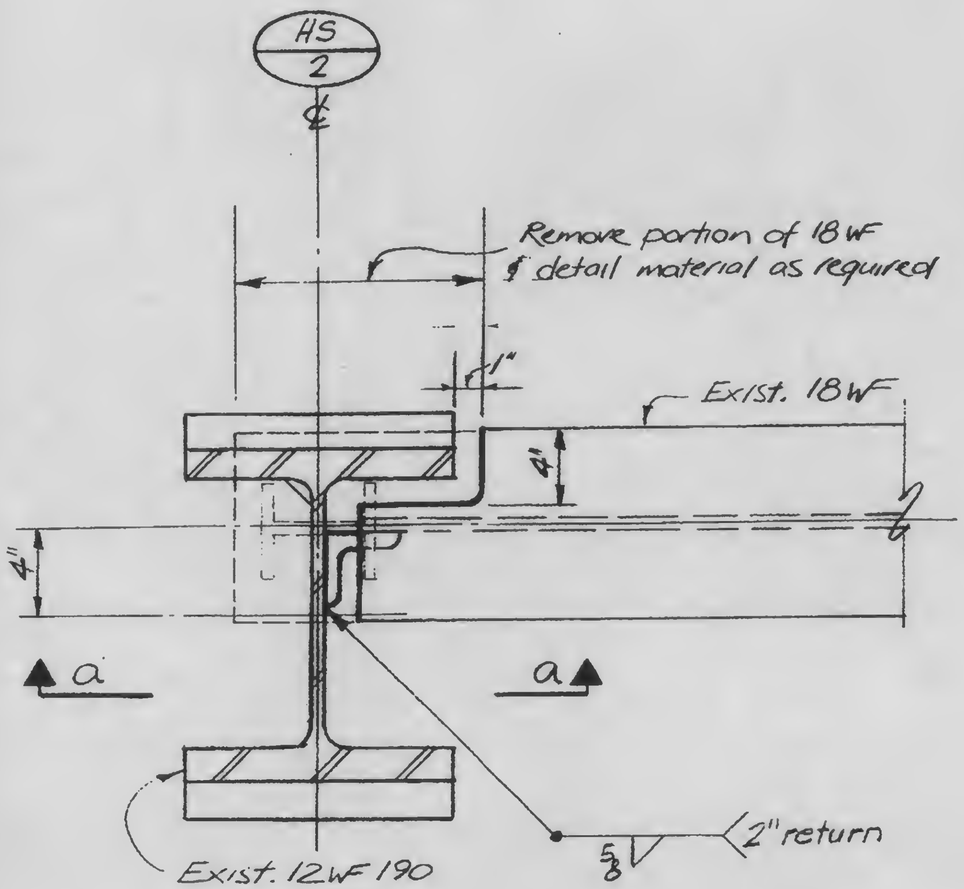

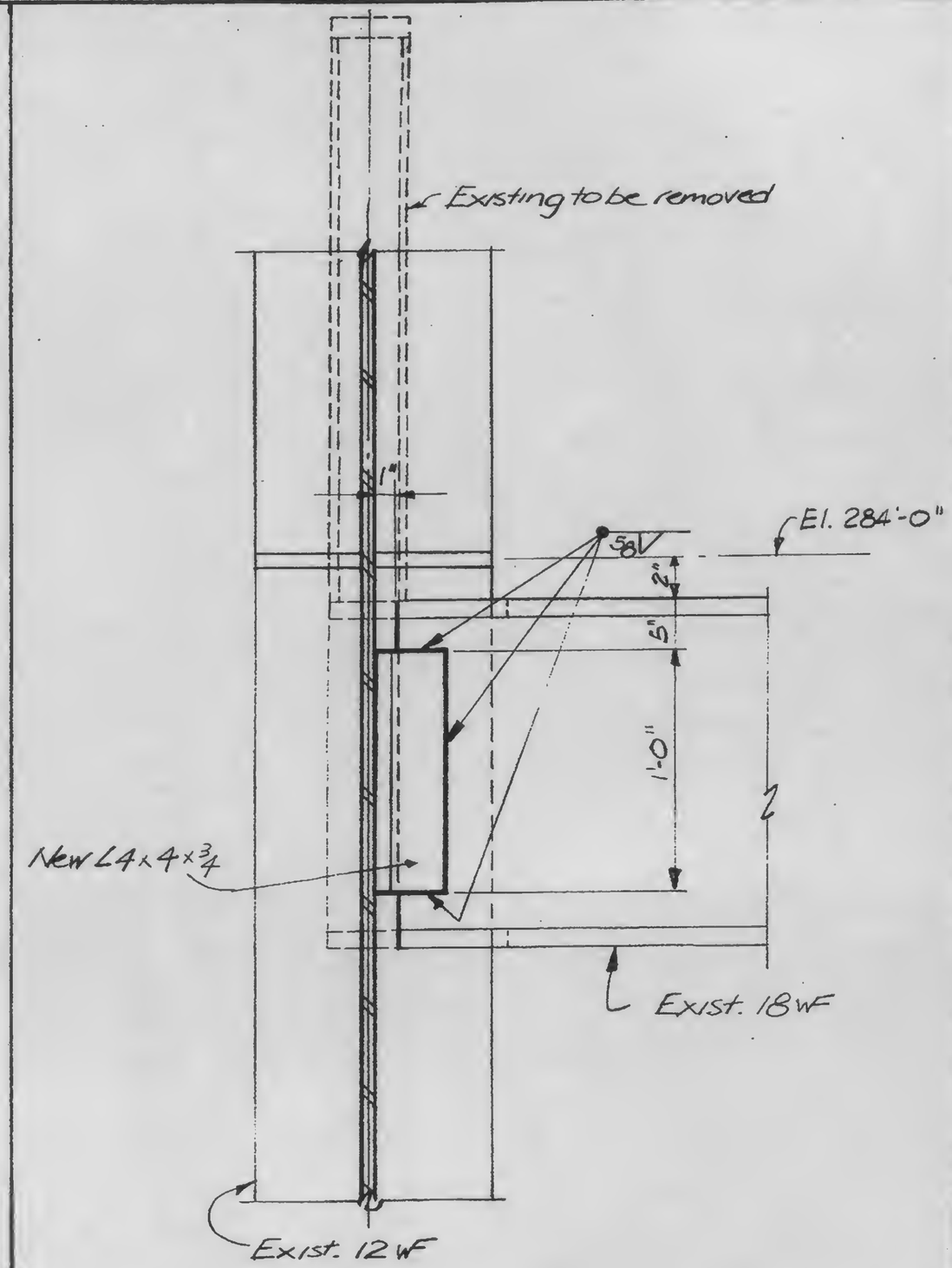

LICENSED PROFESSIONAL ENGINEER
LESLIE E. ROBERTSON
No. 34360
UNIVERSITY OF THE STATE OF NEW YORK

DESIGNED: KC

DRAWN:

REVIEWED:

A | a

13-K10.3-4

SKILLING, HELLE, CHRISTIANSEN, ROBERTSON — Structural & Civil Engineers

PROJECT: THE WORLD TRADE CENTER

TITLE: EL. 310, ZONE K3 - ESC. H1 & H2 - CONN. DETAILS

DATE: 5-7-73.

REVISIONS

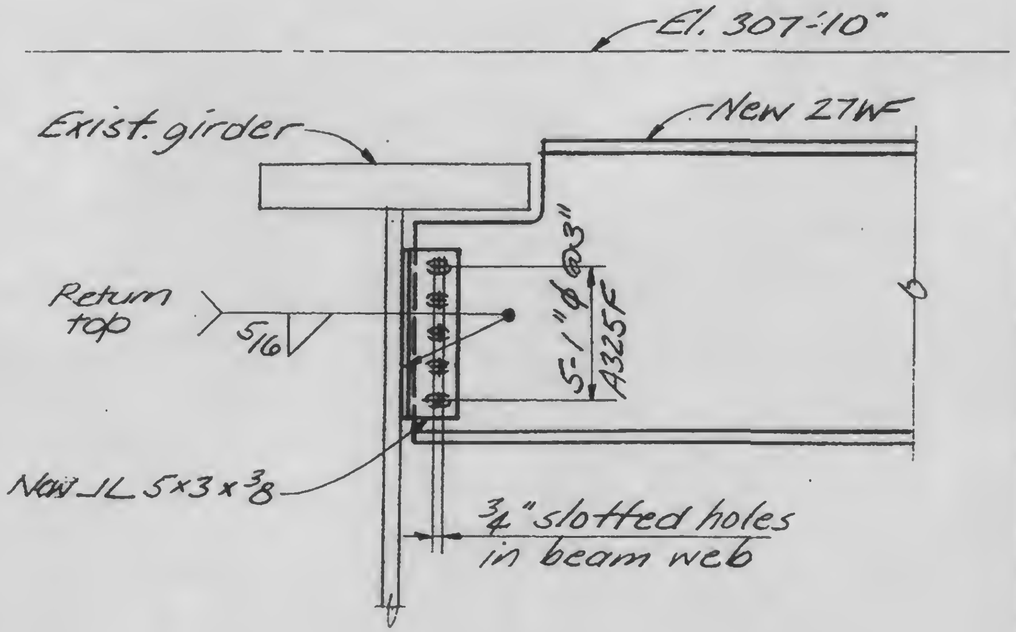

A

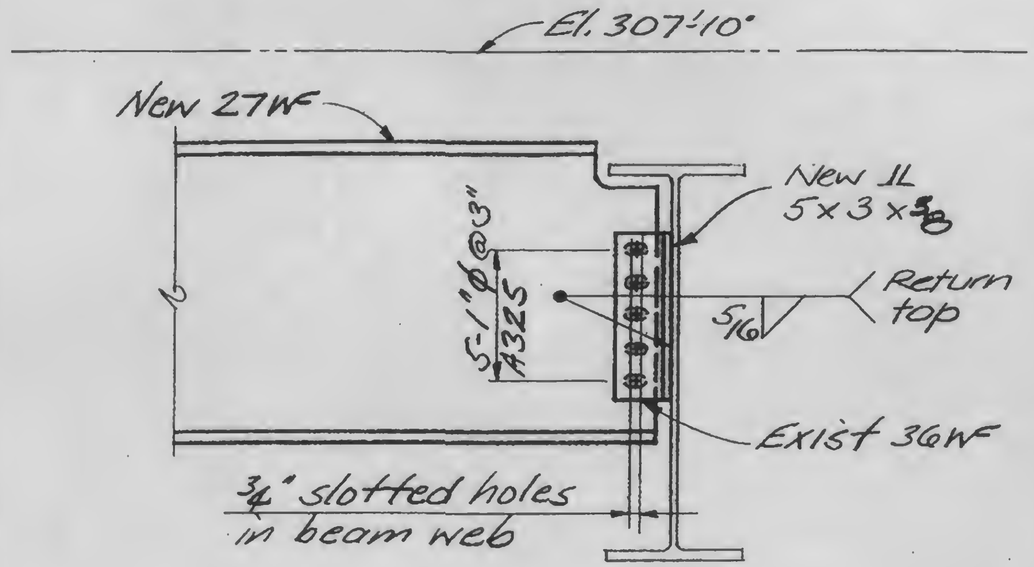

B

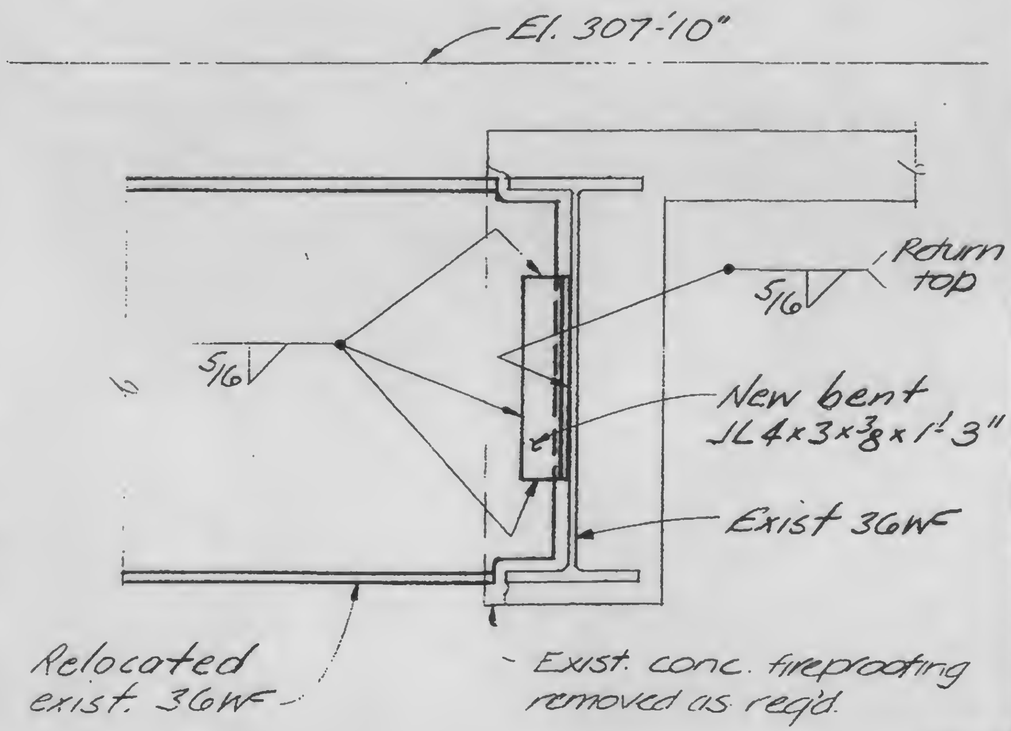

C

LICENSED PROFESSIONAL ENGINEER — LESLIE E. ROBERTSON — No. 34360 — UNIVERSITY OF THE STATE OF NEW YORK

DESIGNED: KC

DRAWN: JG, JB

REVIEWED: WAB

13-K-11.1-1

SKILLING, HELLE, CHRISTIANSEN, ROBERTSON — Structural & Civil Engineers

PROJECT: THE WORLD TRADE CENTER

TITLE: EL. 310 - ZONE K3 - STAIR K3 - CONN. DETAILS

DATE: 5-7-73

REVISIONS

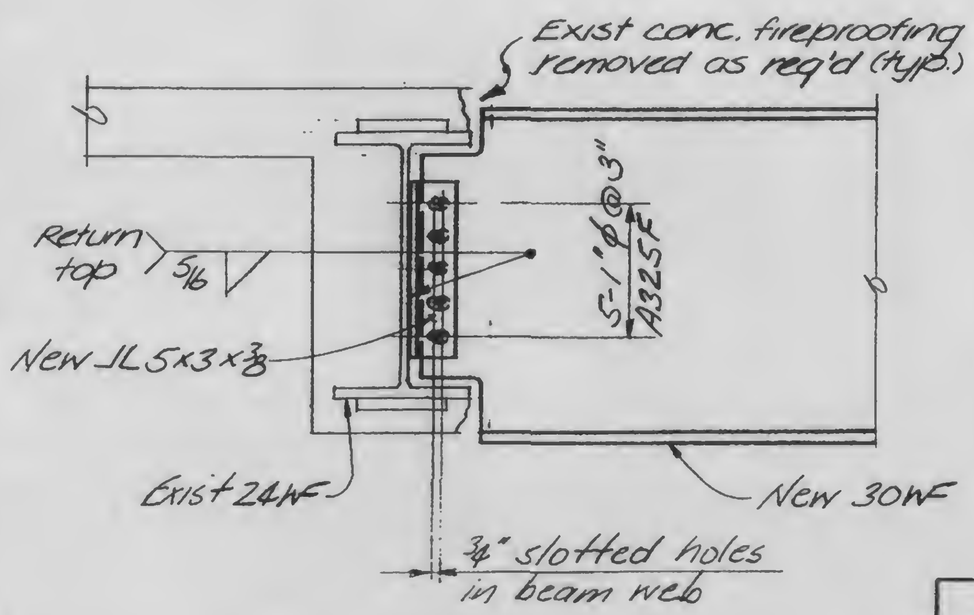

A

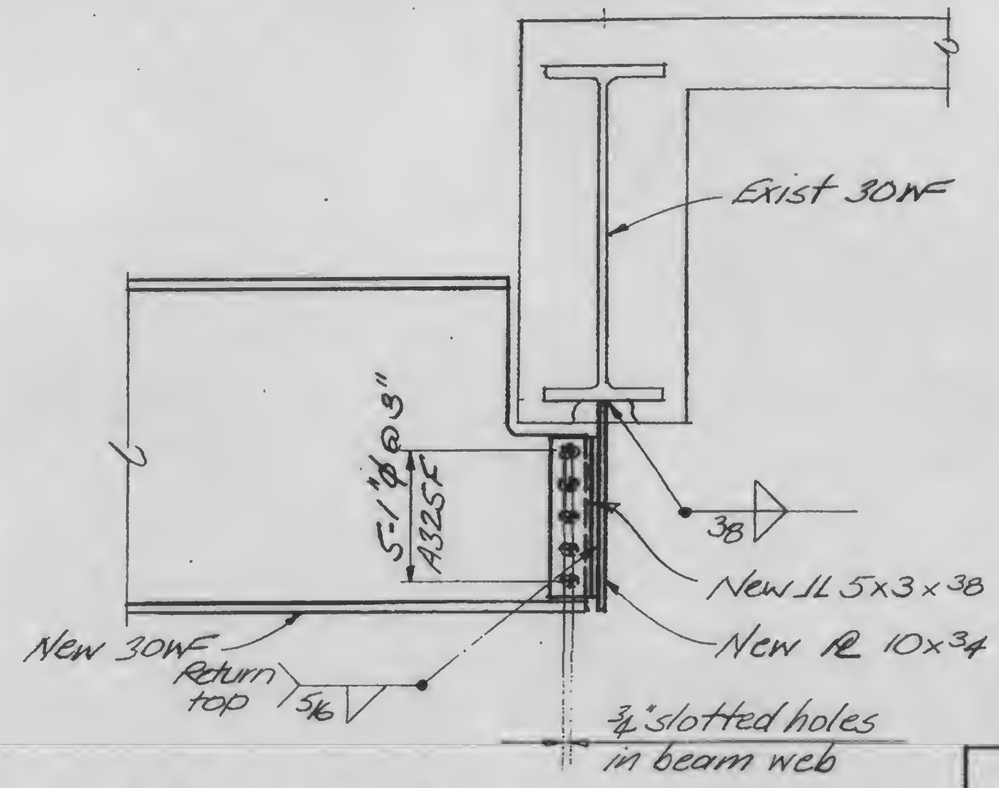

B

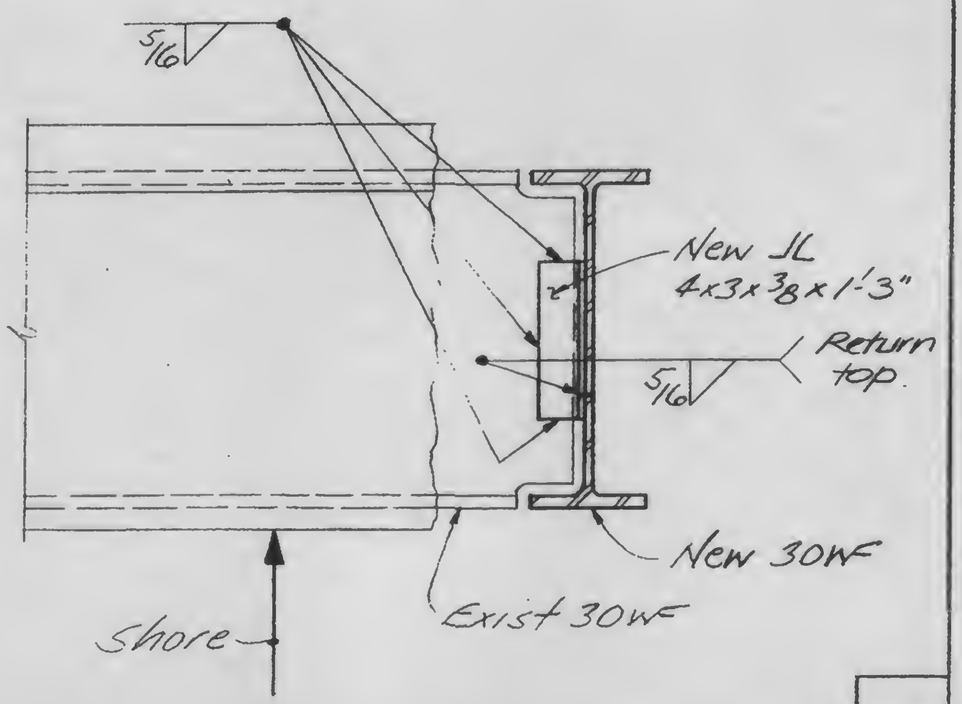

C

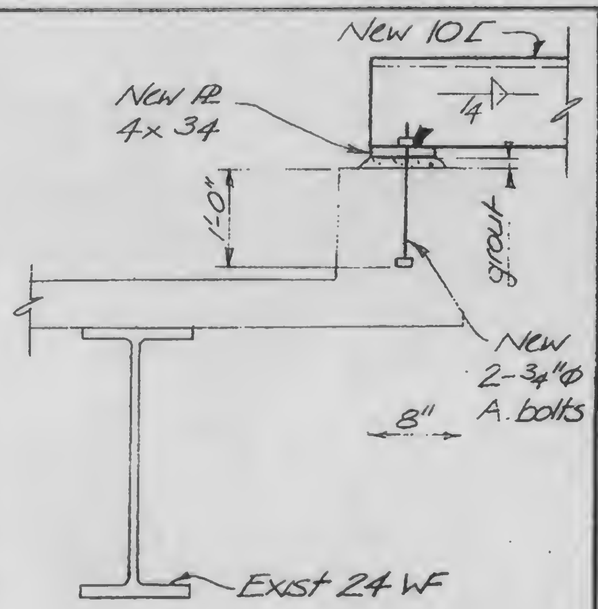

D

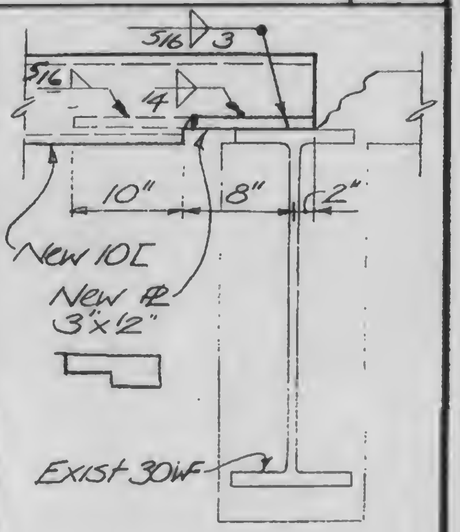

E

13-K11.1-2

LICENSED PROFESSIONAL ENGINEER — LESLIE E. ROBERTSON — No. 34360 — UNIVERSITY OF THE STATE OF NEW YORK

DESIGNED: KC

DRAWN: JB

REVIEWED: WAB

SKILLING, HELLE, CHRISTIANSEN, ROBERTSON — Structural & Civil Engineers

PROJECT: THE WORLD TRADE CENTER | TITLE: EL. 310 - ZONE K3 - "H" ELEV.-CONN DETAILS | DATE: 5-7-73

REVISIONS

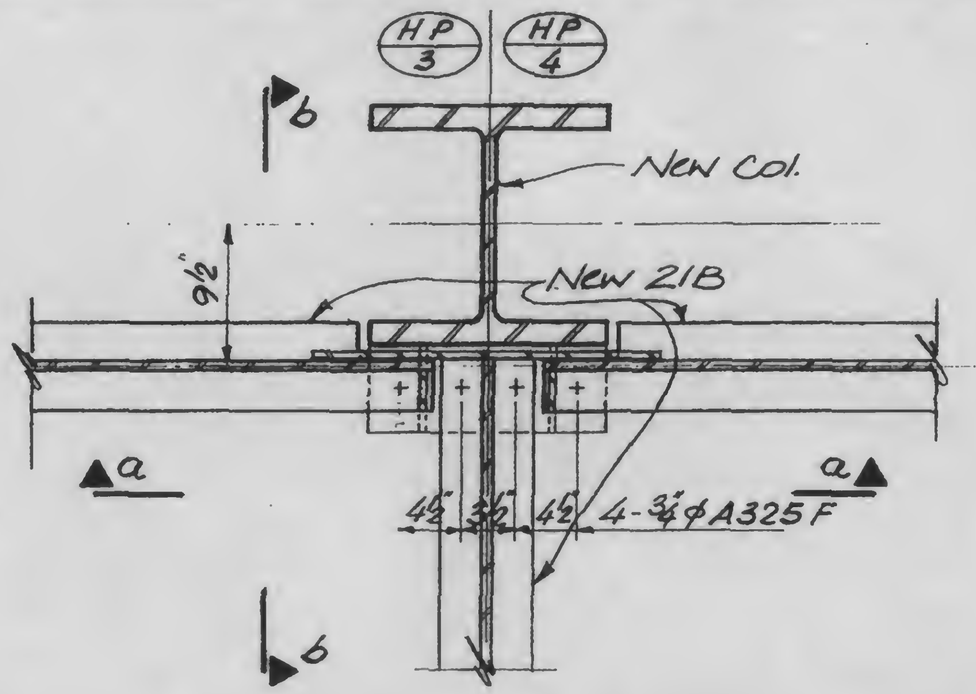

A

a | b

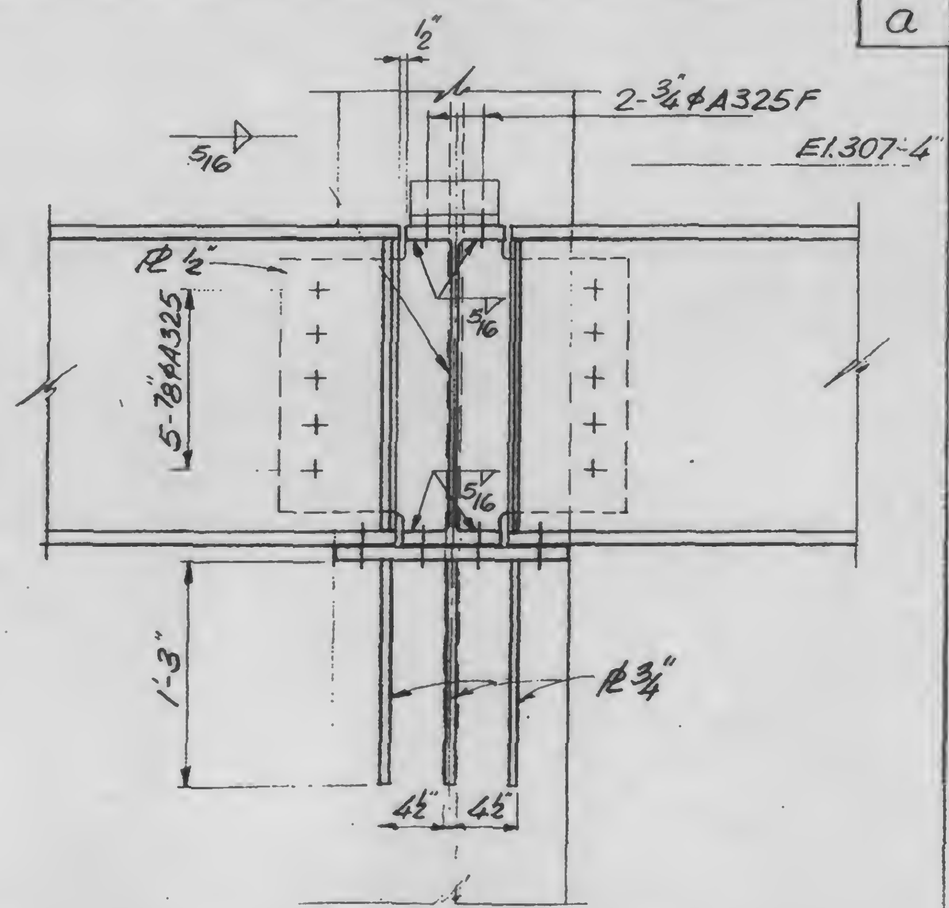

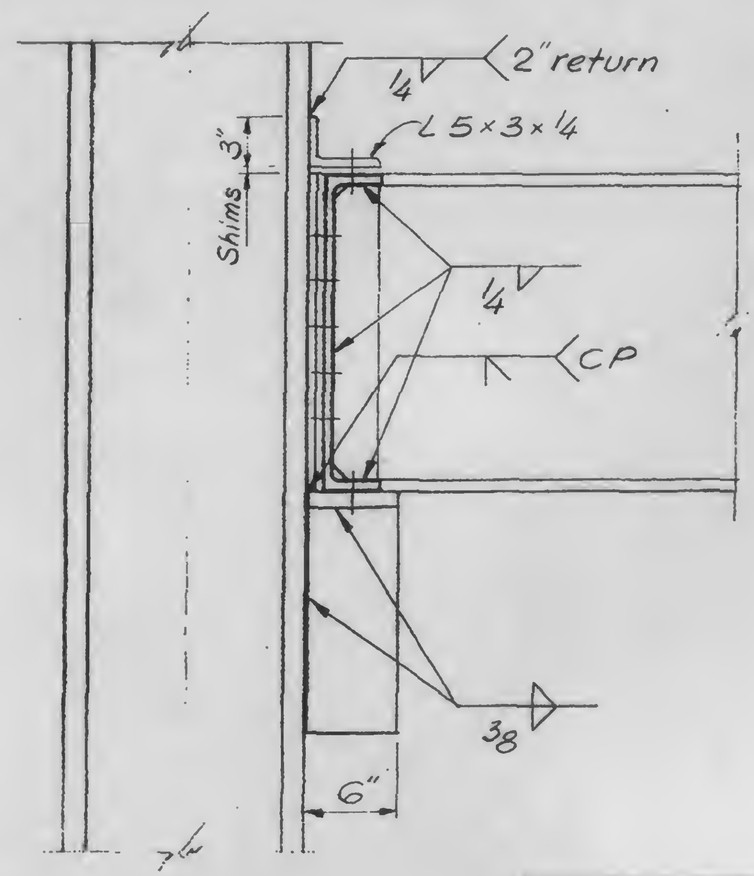

LICENSED PROFESSIONAL ENGINEER
LESLIE E. ROBERTSON
No 34360
UNIVERSITY OF THE STATE OF NEW YORK

DESIGNED: K. Chiang
DRAWN: John Gnaeng
REVIEWED: WAR

13-K111-31

SKILLING, HELLE, CHRISTIANSEN, ROBERTSON — Structural & Civil Engineers

PROJECT: THE WORLD TRADE CENTER

TITLE: EL 310 - ZONE K3 - "H" ELEV. - CONN DETAILS

DATE: 5-7-73

REVISIONS

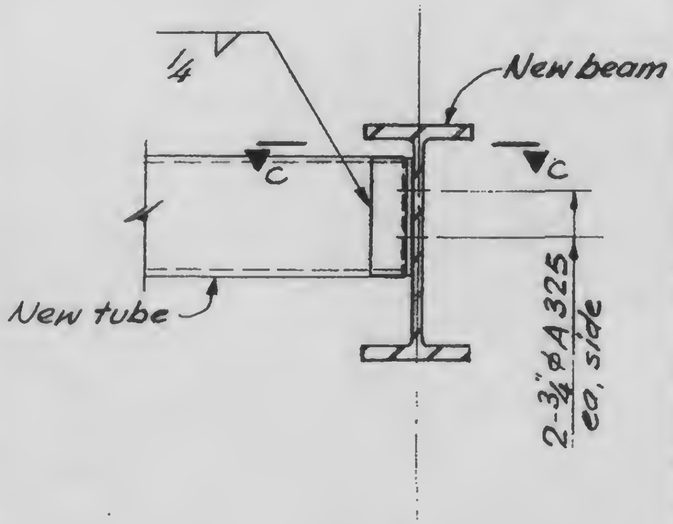

C

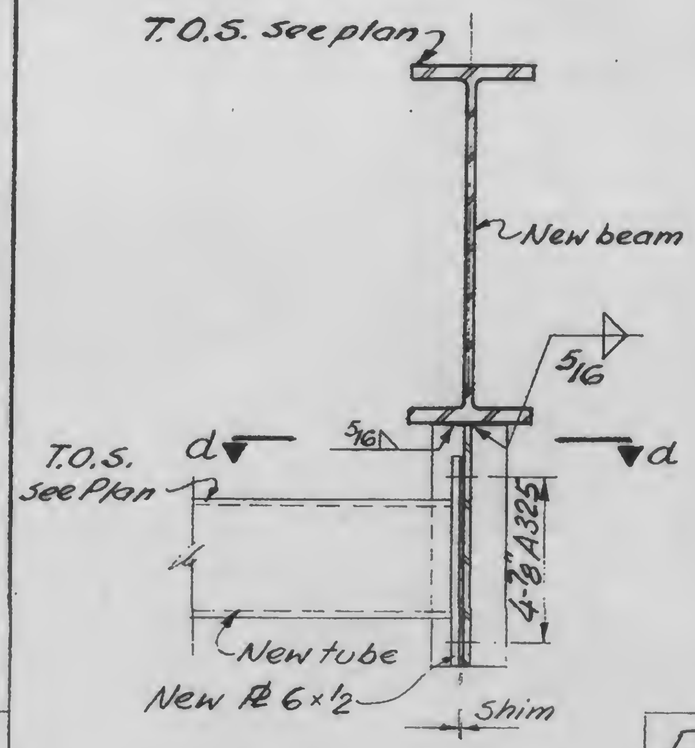

D

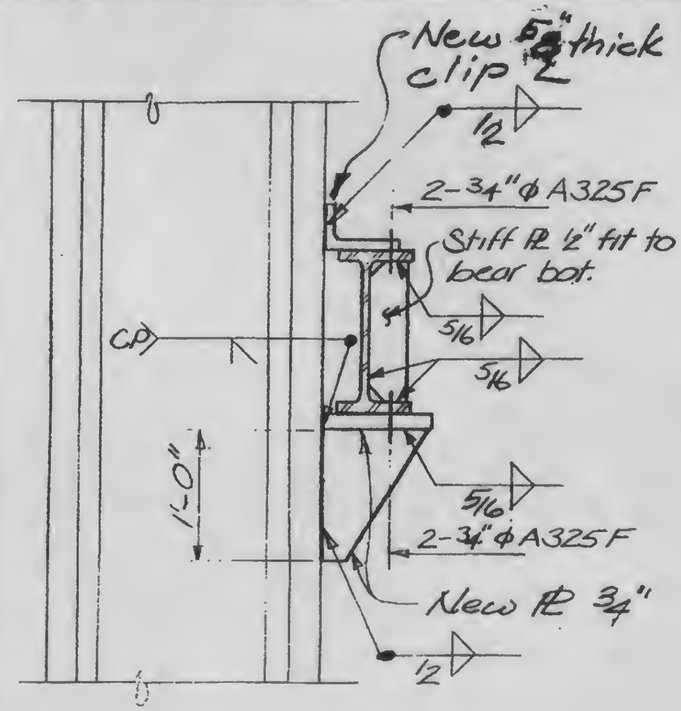

e

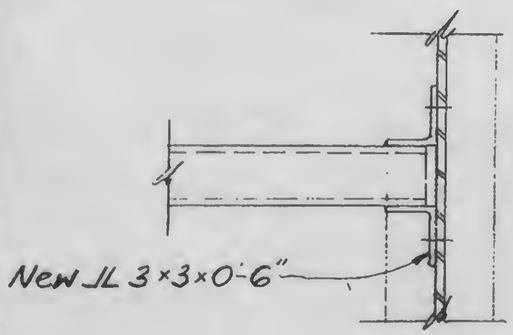

c

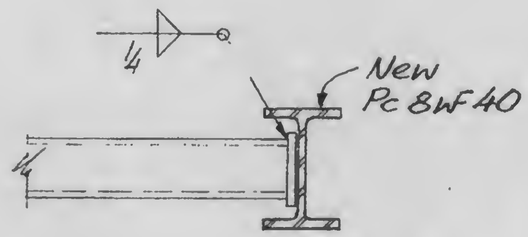

d

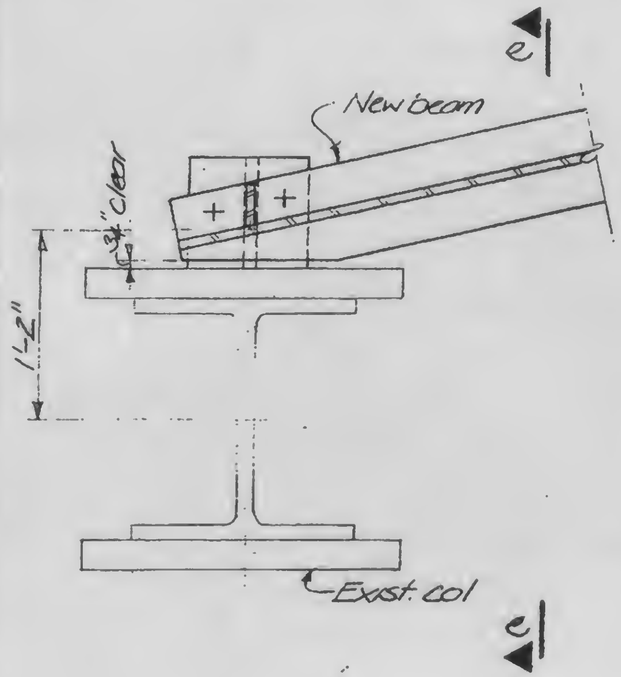

E

13-K11.1-3.2

LICENSED PROFESSIONAL ENGINEER — LESLIE E. ROBERTSON — No. 34360 — UNIVERSITY OF THE STATE OF NEW YORK

DESIGNED: K. Chiang

DRAWN: John Gurney

REVIEWED: LER

SKILLING, HELLE, CHRISTIANSEN, ROBERTSON — Structural & Civil Engineers

PROJECT: THE WORLD TRADE CENTER

TITLE: EL. 310 - ZONE K3 - "H" ELEV. - CONN DETAILS

DATE: 5-7-73.

REVISIONS

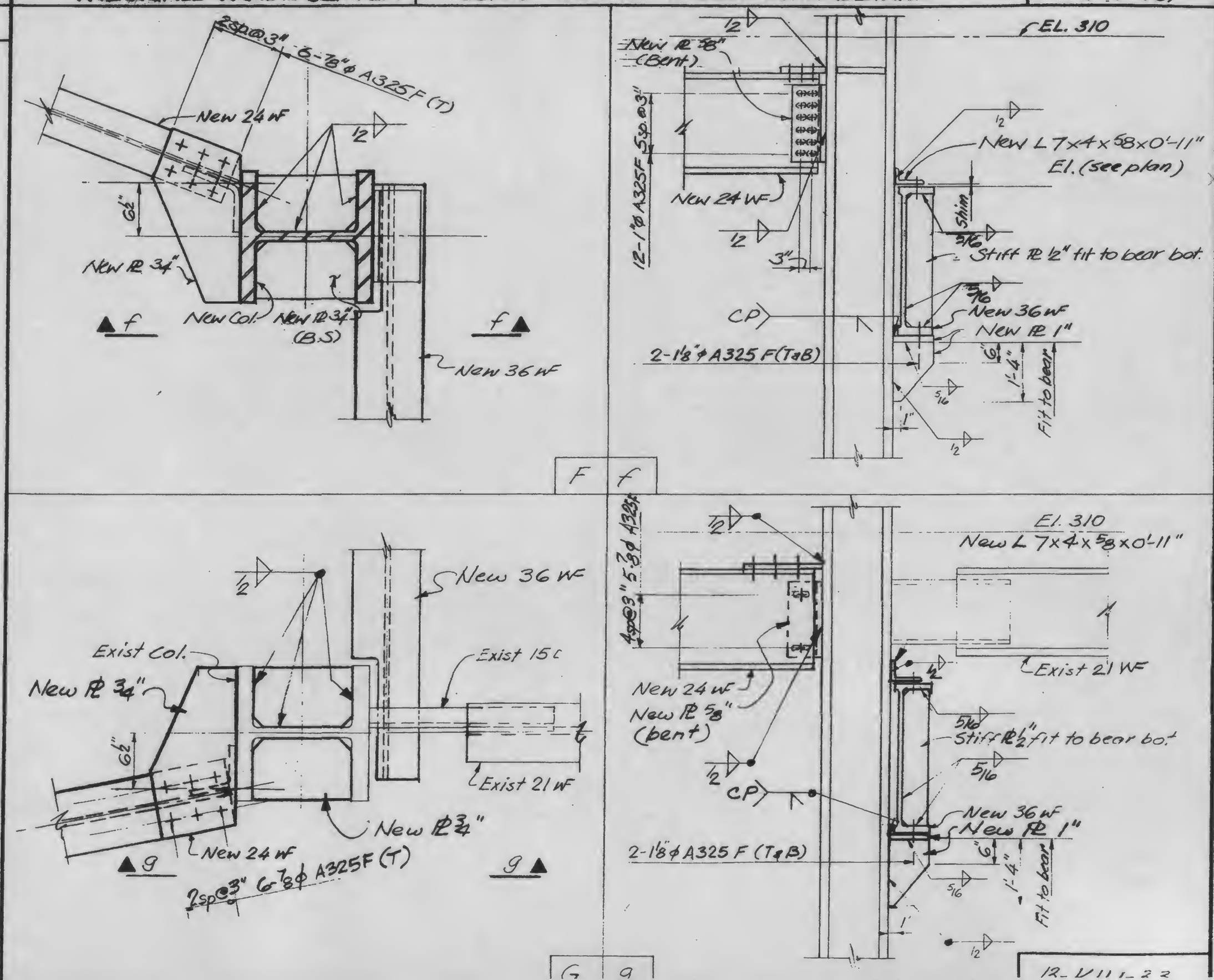

LICENSED PROFESSIONAL ENGINEER — LESLIE E. ROBERTSON — No. 34360 — UNIVERSITY OF THE STATE OF NEW YORK

DESIGNED: K.C.

DRAWN: [illegible]

REVIEWED: WOB

SKILLING, HELLE, CHRISTIANSEN, ROBERTSON — Structural & Civil Engineers

PROJECT: THE WORLD TRADE CENTER

TITLE: EL. 310 - ZONE K3 - "H" ELEV. - CONN. DETAILS

DATE: 5-7-73

REVISIONS

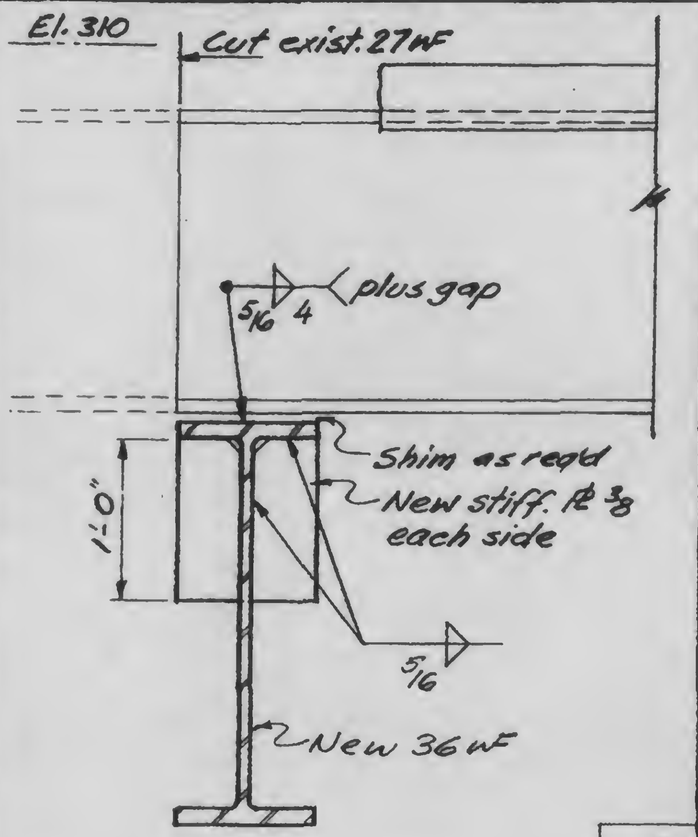

H

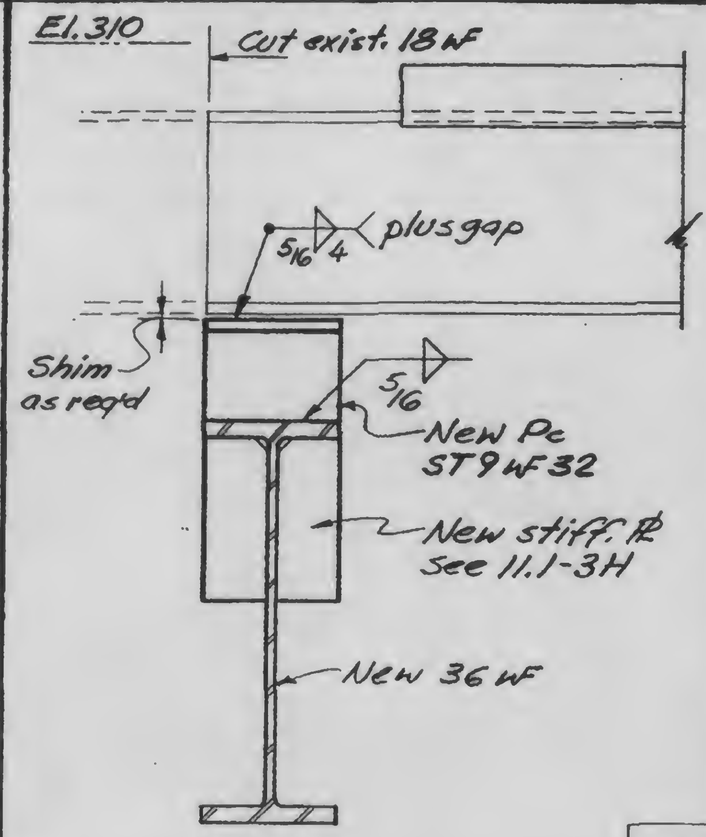

J

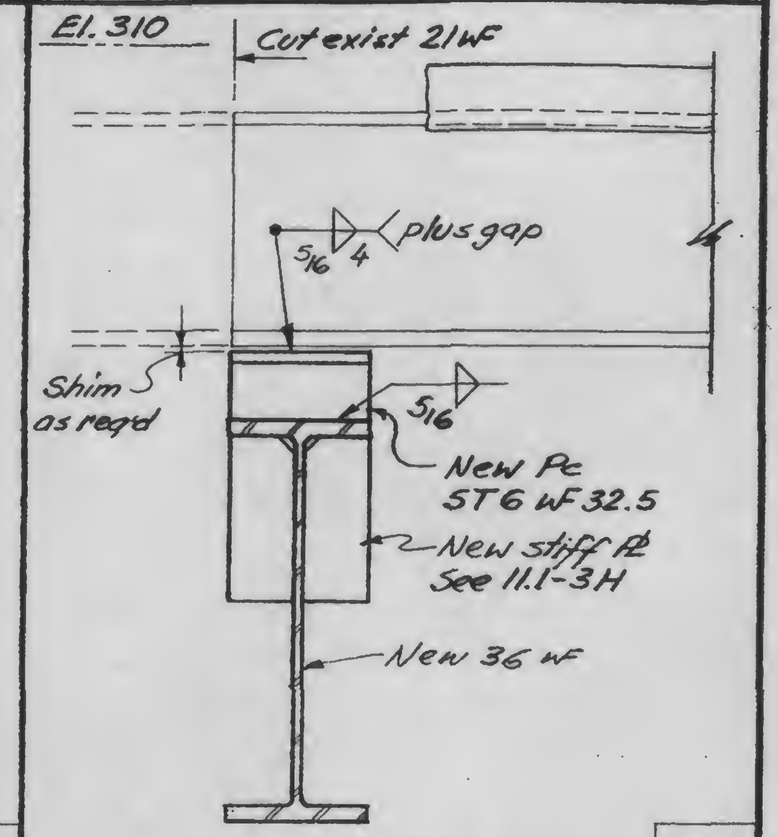

K

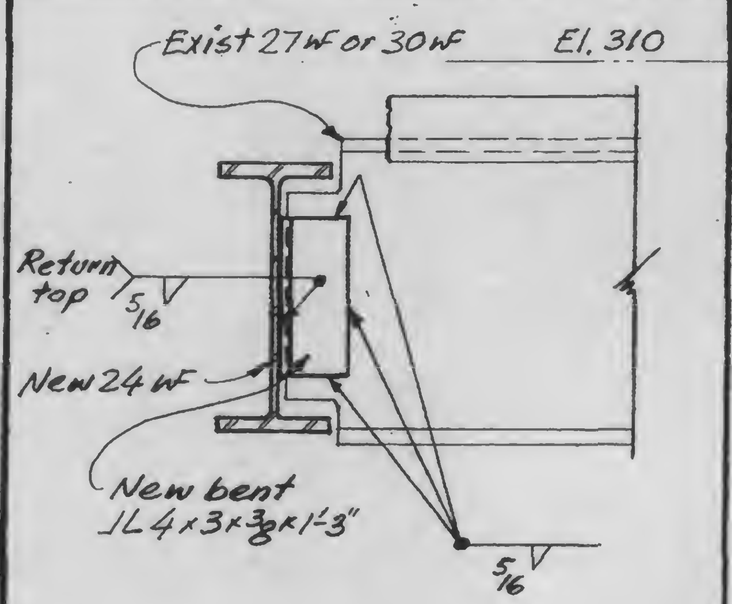

M

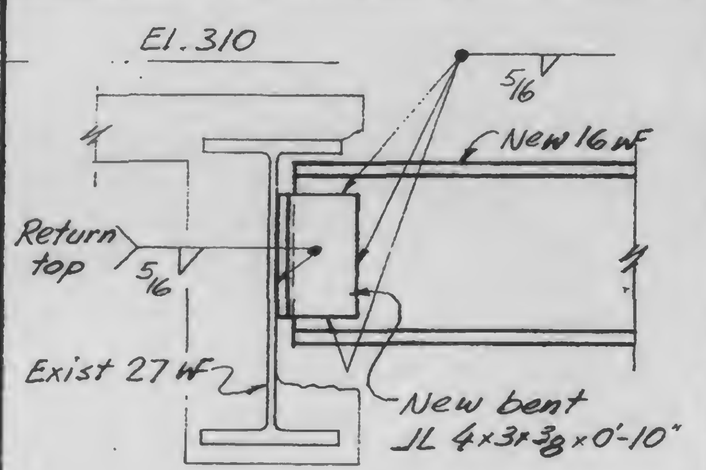

N

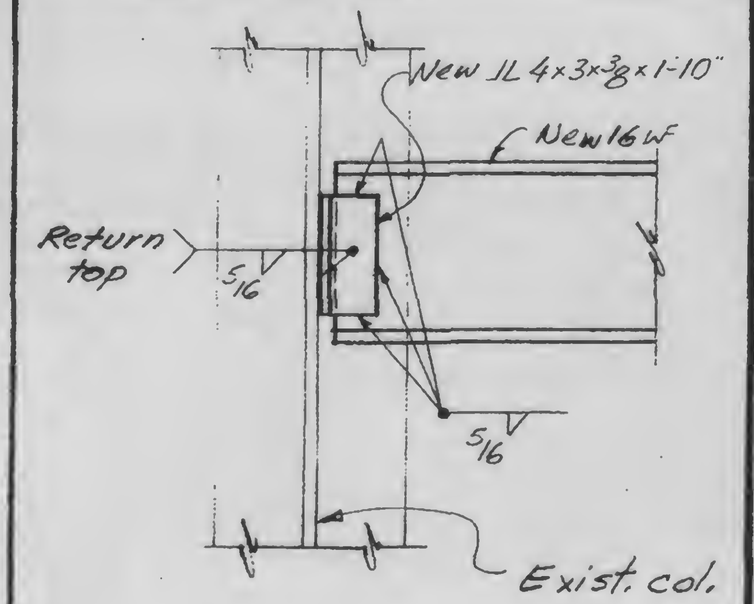

P

LICENSED PROFESSIONAL ENGINEER — LESLIE E. ROBERTSON — No. 34360 — UNIVERSITY OF THE STATE OF NEW YORK

DESIGNED

DRAWN John Gaccione

REVIEWED WAB

13-K11.1-3.4

SKILLING, HELLE, CHRISTIANSEN, ROBERTSON — Structural & Civil Engineers

PROJECT: THE WORLD TRADE CENTER

TITLE: EL. 310 - ZONE K3 - COLUMN REMOVAL DETAILS

DATE: 5-7-73

REVISIONS

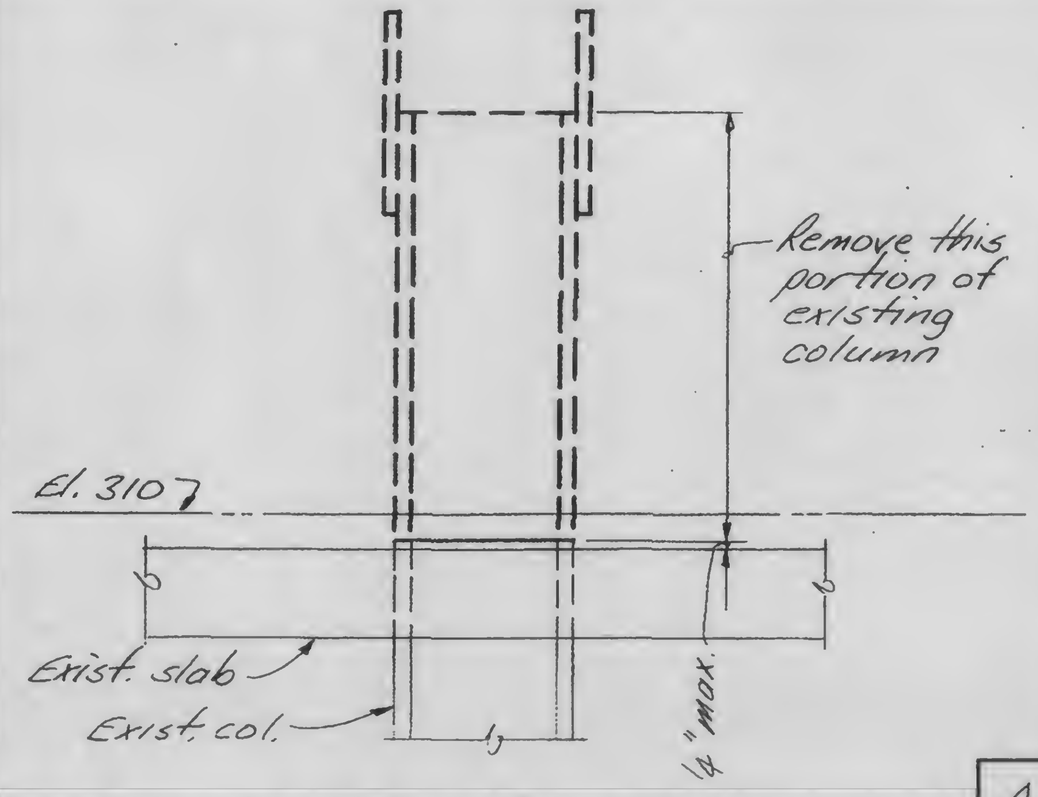

A

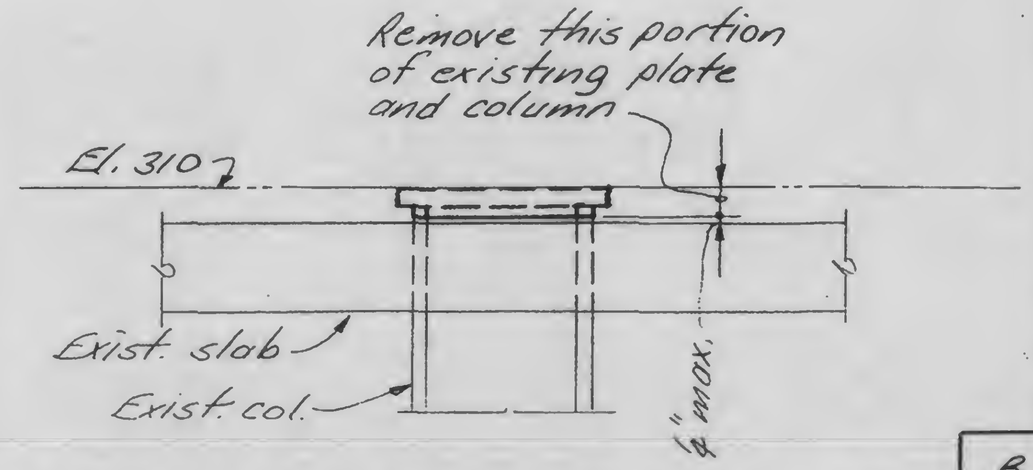

B

LICENSED PROFESSIONAL ENGINEER
LESLIE E. ROBERTSON
No. 34360
UNIVERSITY OF THE STATE OF NEW YORK

DESIGNED

DRAWN JA

REVIEWED WOB

13-K11.1-4

SKILLING, HELLE, CHRISTIANSEN, ROBERTSON — Structural & Civil Engineers

PROJECT: THE WORLD TRADE CENTER

TITLE: EL 310 - ZONE K1 - NEW OPENINGS - CONN. DETAILS

DATE: 5-7-73

REVISIONS

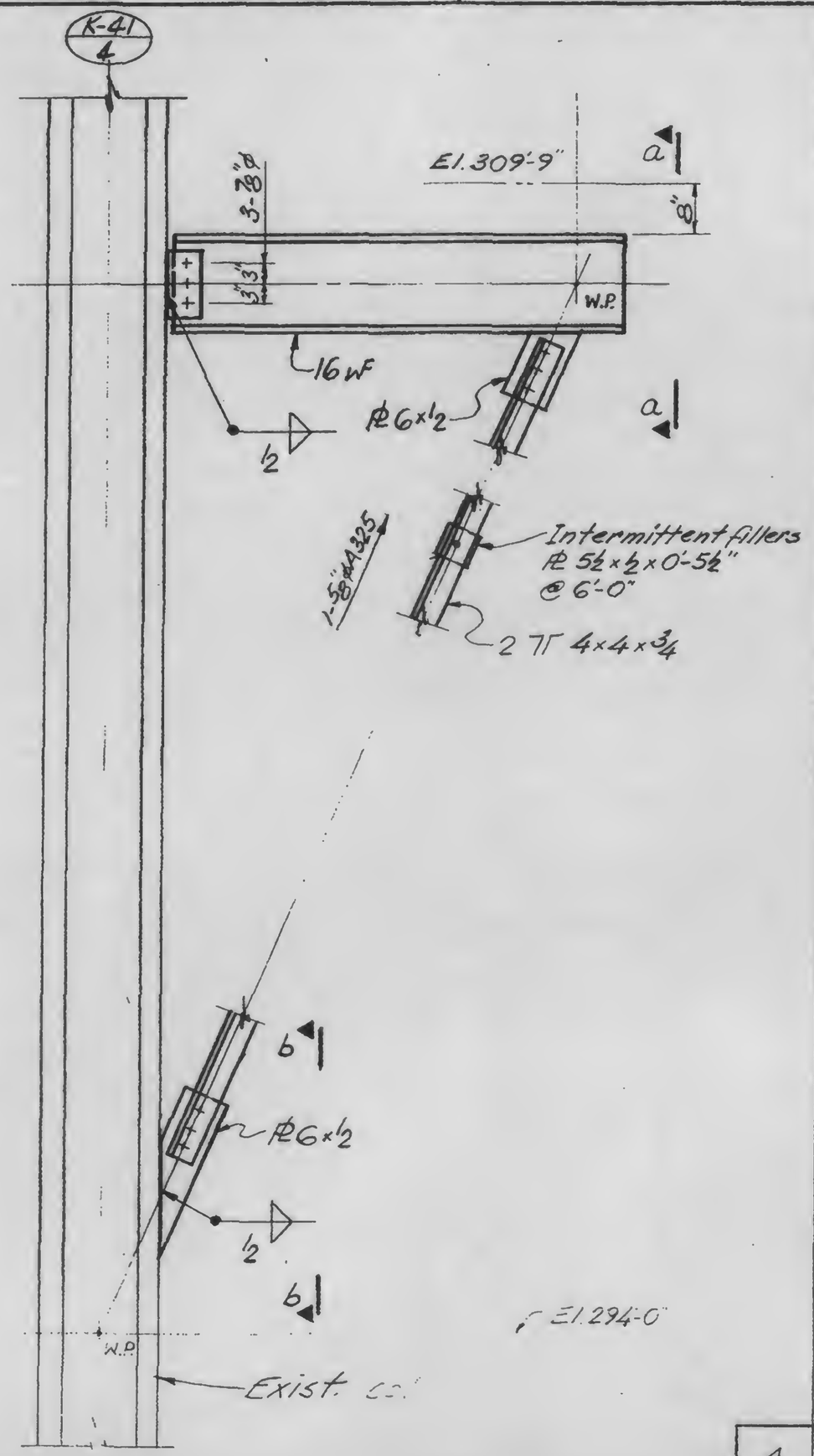

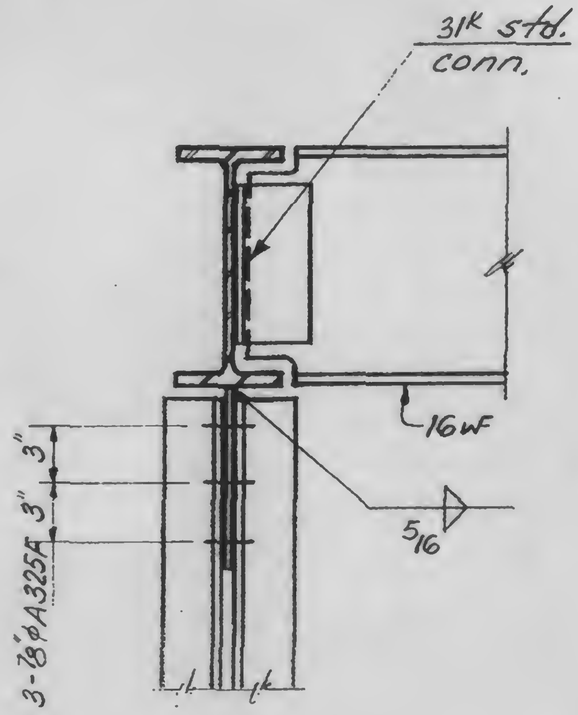

a

b

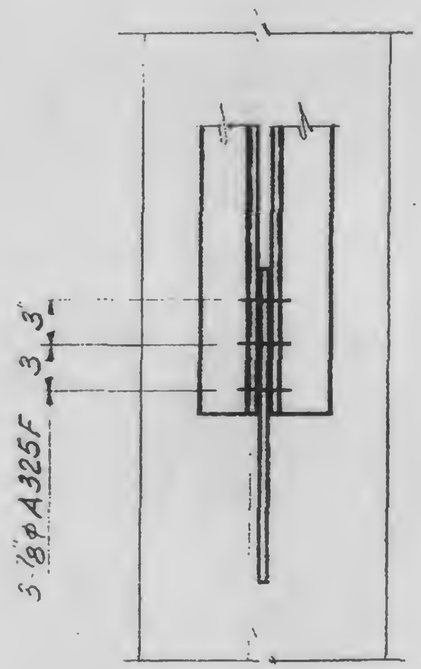

LICENSED PROFESSIONAL ENGINEER
LESLIE E. ROBERTSON
No. 34360
UNIVERSITY OF THE STATE OF NEW YORK

DESIGNED

DRAWN

REVIEWED

A

13-K11.1-5.1

SKILLING, HELLE, CHRISTIANSEN, ROBERTSON — Structural & Civil Engineers

PROJECT: THE WORLD TRADE CENTER

TITLE: EL. 310 - ZONE K1 - NEW OPENINGS CONN. DETAILS

DATE: 5-7-73

REVISIONS

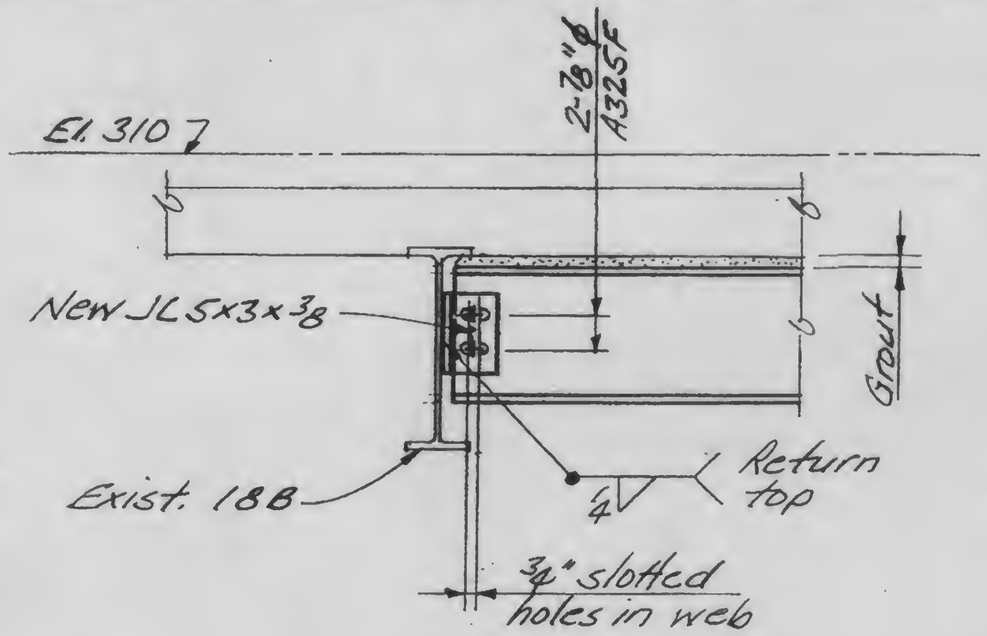

C

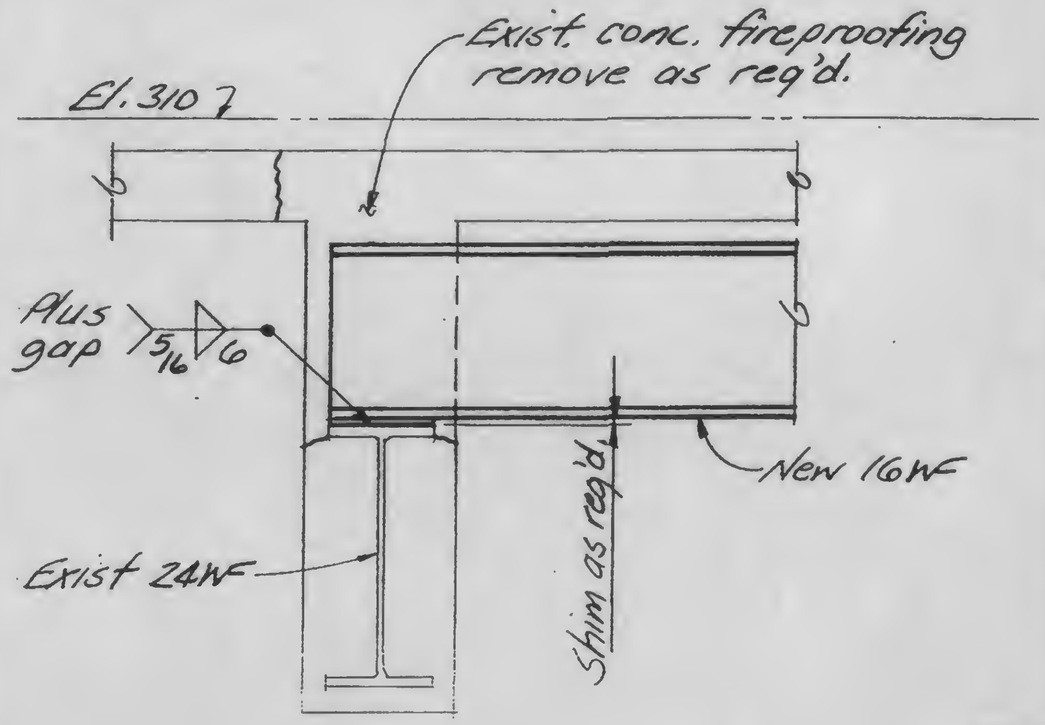

D

LICENSED PROFESSIONAL ENGINEER
LESLIE E. ROBERTSON
No. 34960
UNIVERSITY OF THE STATE OF NEW YORK

DESIGNED

DRAWN JA

REVIEWED WaB

13-K11.1-5.2

SKILLING, HELLE, CHRISTIANSEN, ROBERTSON — Structural & Civil Engineers

PROJECT: THE WORLD TRADE CENTER

TITLE: EL. 310-ZONE K5-STAIR K6A - CONN. DETAIL

DATE: 5-7-73

REVISIONS

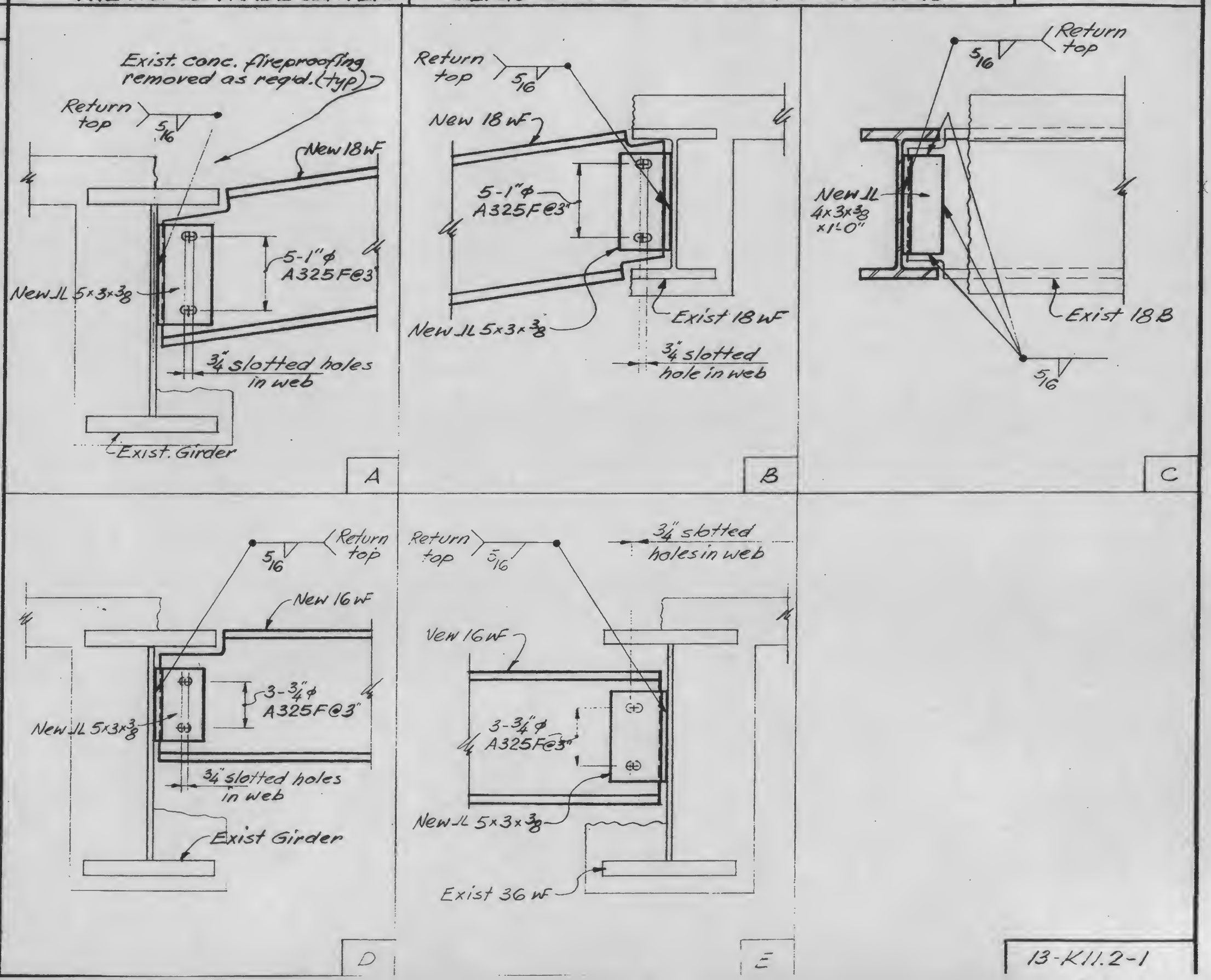

LICENSED PROFESSIONAL ENGINEER — LESLIE E. ROBERTSON — No. 34360 — UNIVERSITY OF THE STATE OF NEW YORK

DESIGNED

DRAWN John Freeman

REVIEWED WAB

13-K11.2-1

SKILLING, HELLE, CHRISTIANSEN, ROBERTSON — Structural & Civil Engineers

PROJECT: THE WORLD TRADE CENTER | TITLE: EL. 310 - ZONE K5-STAIR 8-CONN. DETAIL | DATE: 5-7-73

REVISIONS

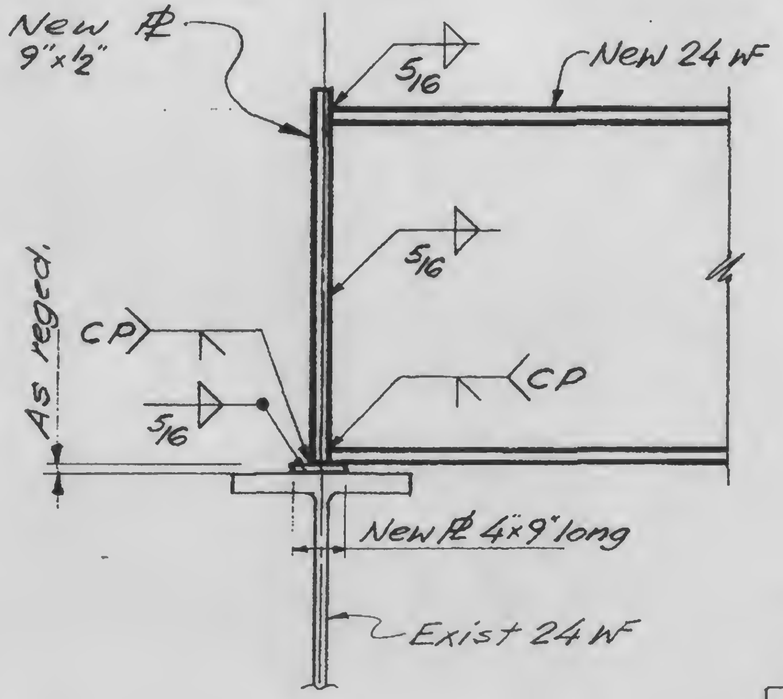

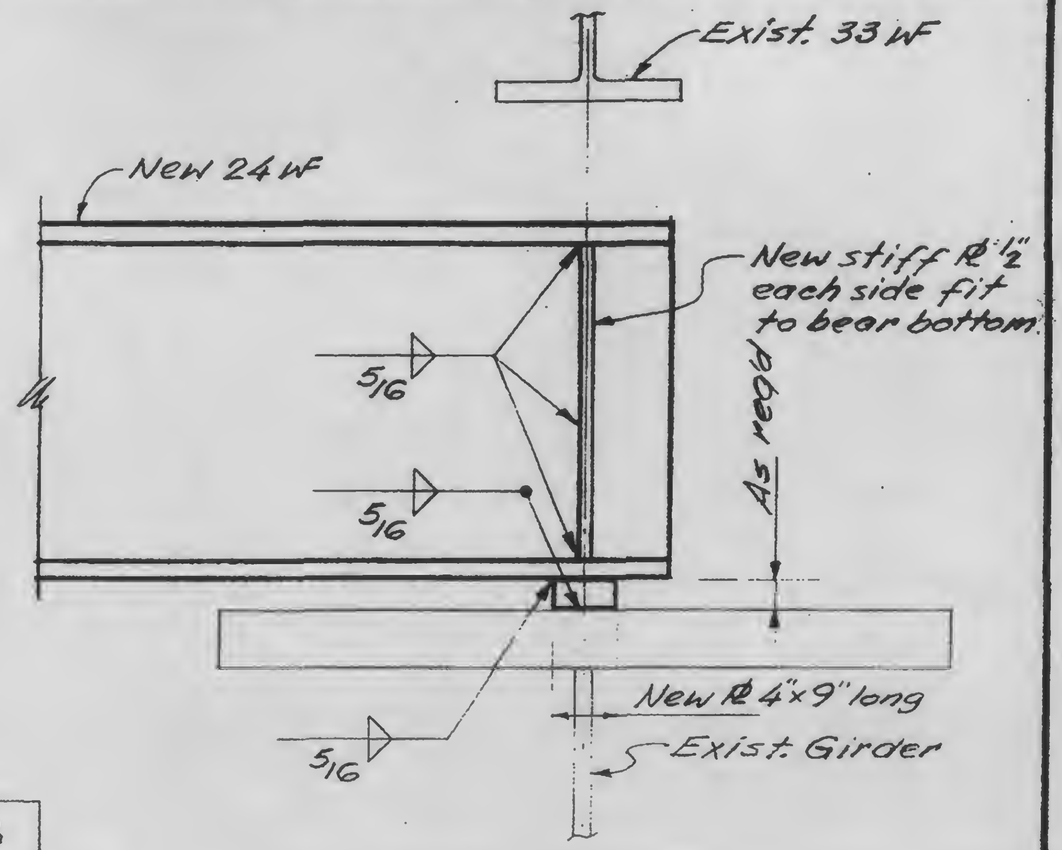

A | B

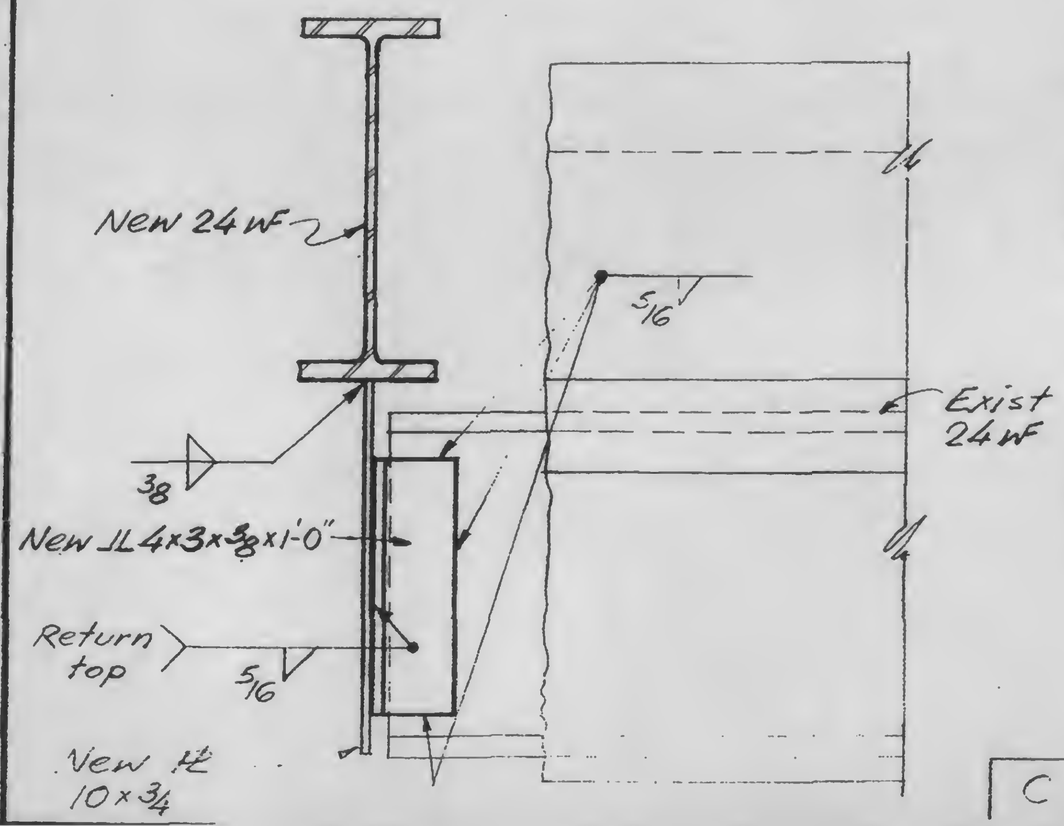

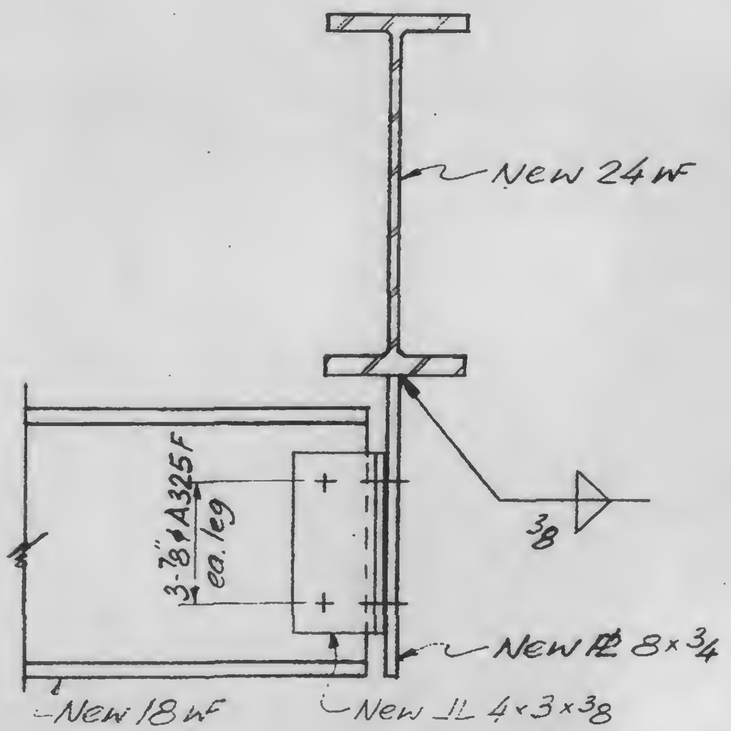

C | D

13-K11.2-2.1

LICENSED PROFESSIONAL ENGINEER — LESLIE E. ROBERTSON — No. 34360 — UNIVERSITY OF THE STATE OF NEW YORK

DESIGNED

DRAWN John Grieves

REVIEWED

SKILLING, HELLE, CHRISTIANSEN, ROBERTSON — Structural & Civil Engineers

PROJECT: THE WORLD TRADE CENTER

TITLE: EL 310 – ZONE K5 – STAIR 8 – CONN. DET.

DATE: 5-7-73

REVISIONS

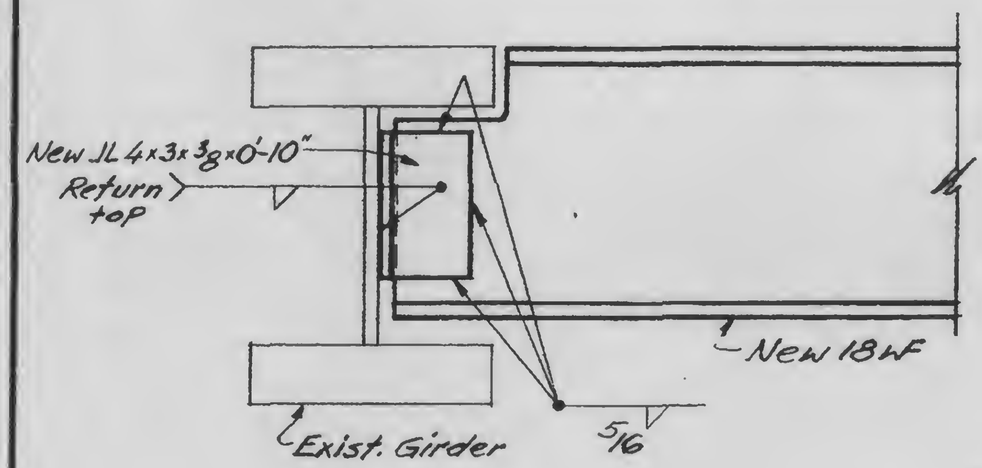

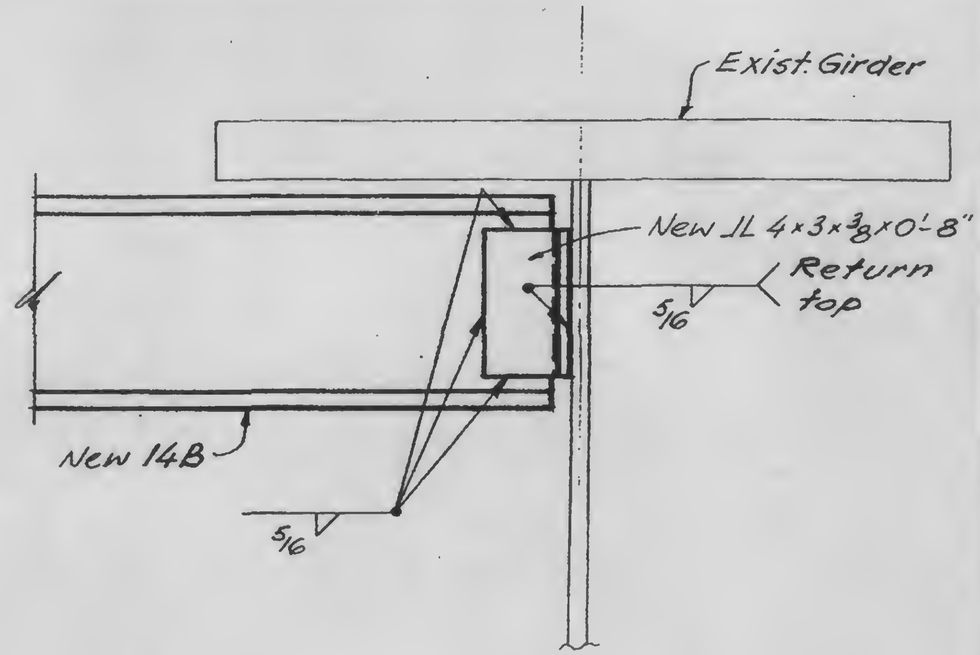

E F

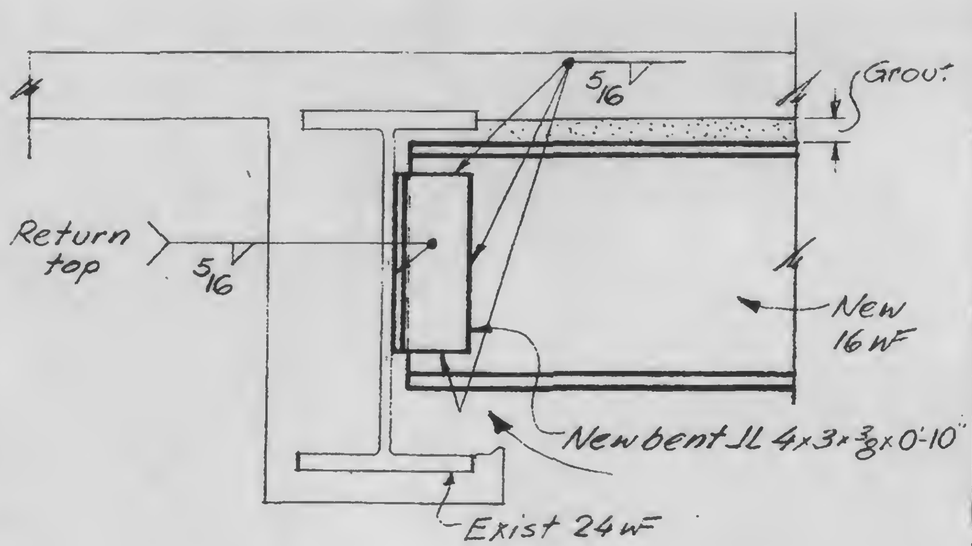

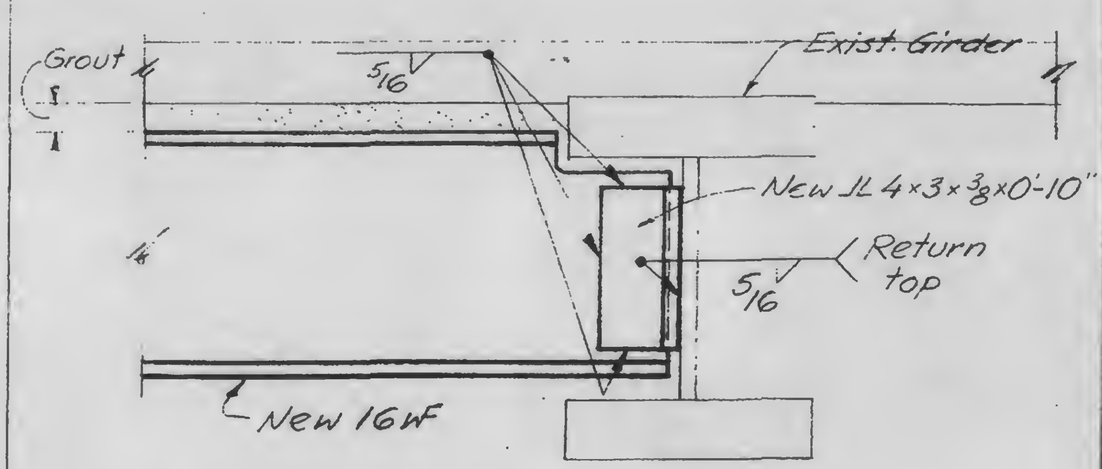

Exist conc. fireproofing removed as req'd.

G H

LICENSED PROFESSIONAL ENGINEER — LESLIE E. ROBERTSON — No. 34360 — UNIVERSITY OF THE STATE OF NEW YORK

DESIGNED

DRAWN John Greene

REVIEWED Wat

13-K11.2-2.2

SKILLING, HELLE, CHRISTIANSEN, ROBERTSON — Structural & Civil Engineers

PROJECT: THE WORLD TRADE CENTER

TITLE: EL.310 - ZONE K5-STAIR 8-CONN. DETAILS

DATE: 5-7-73

REVISIONS

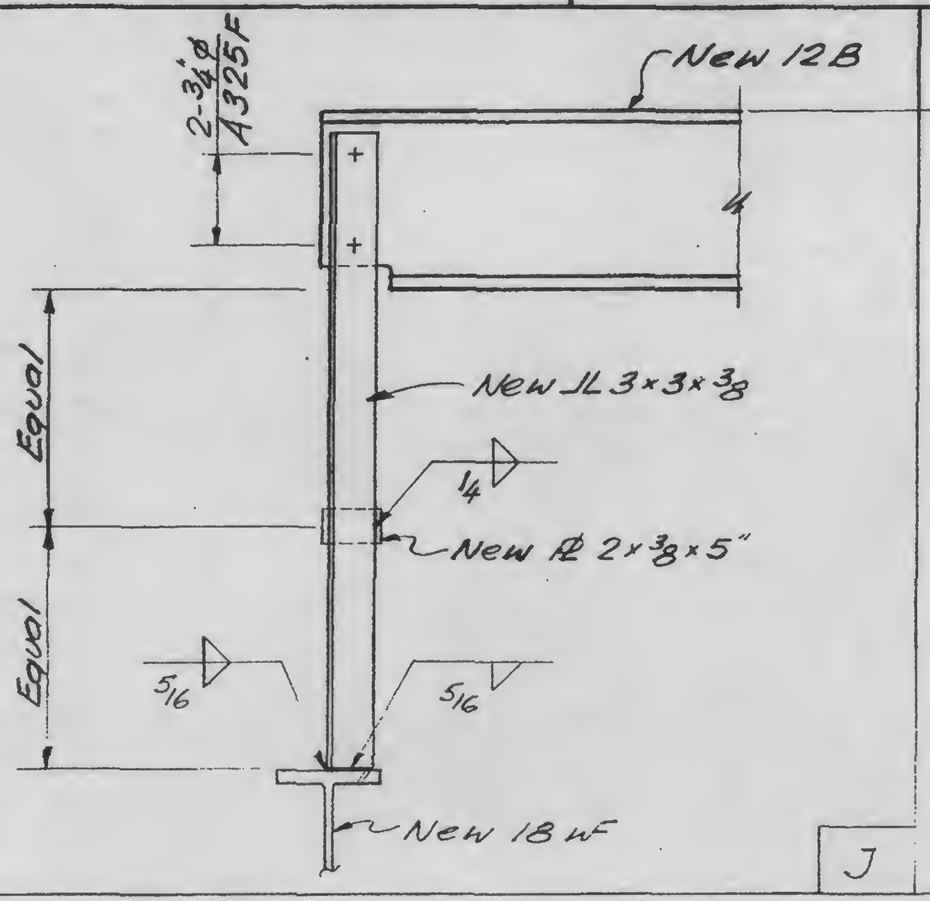

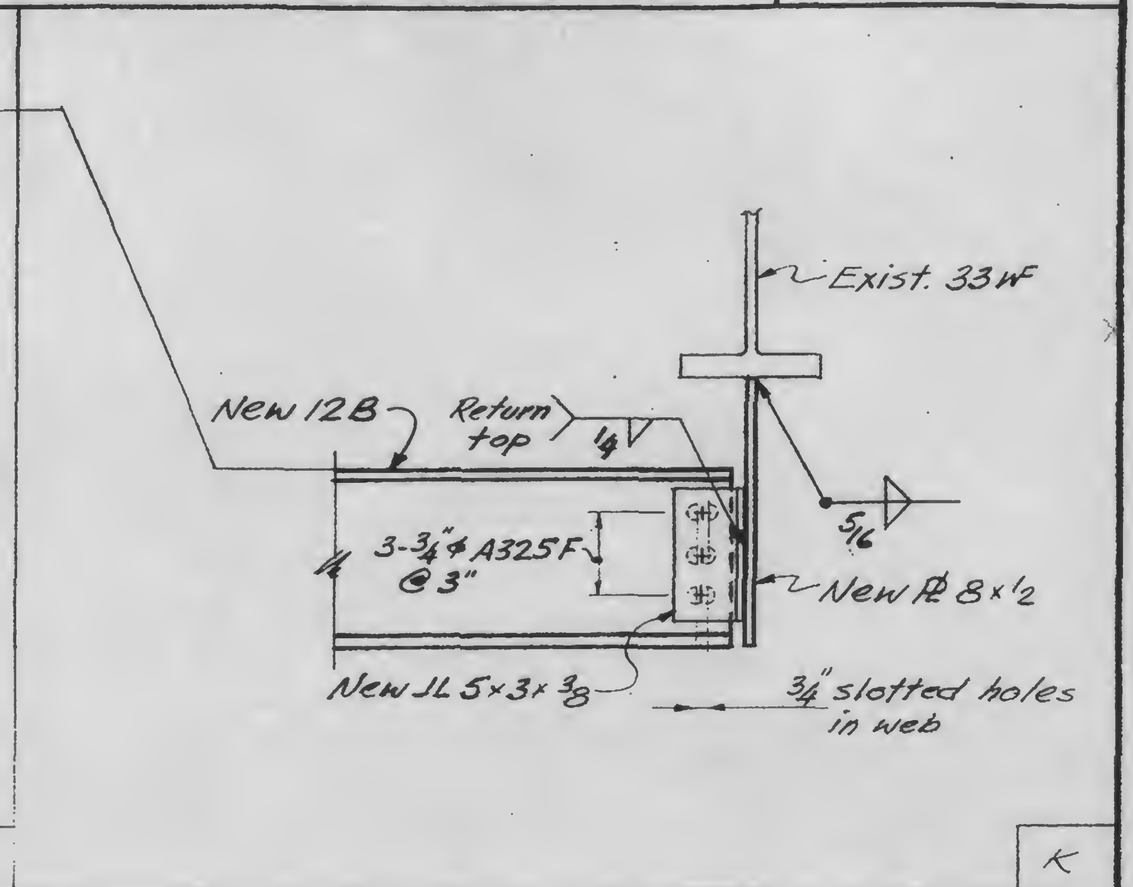

LICENSED PROFESSIONAL ENGINEER
LESLIE E. ROBERTSON
No. 34360
UNIVERSITY OF THE STATE OF NEW YORK

DESIGNED

DRAWN

REVIEWED

13-K11.2-2.3

SKILLING, HELLE, CHRISTIANSEN, ROBERTSON — Structural & Civil Engineers

PROJECT: THE WORLD TRADE CENTER

TITLE: EL. 310 - ZONE K.5 -- F.A. INTAKE-CONN. DETAILS

DATE: 5-7-73

REVISIONS

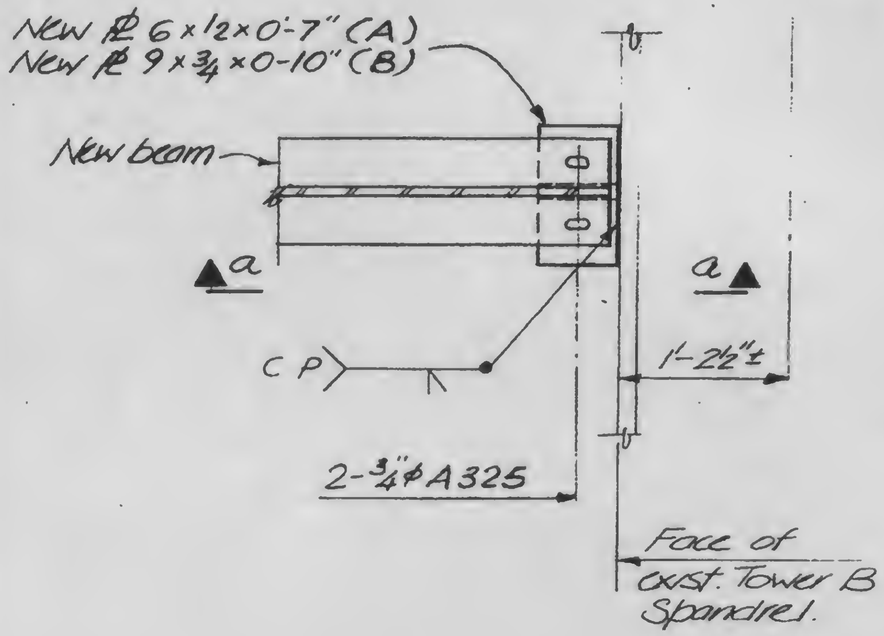

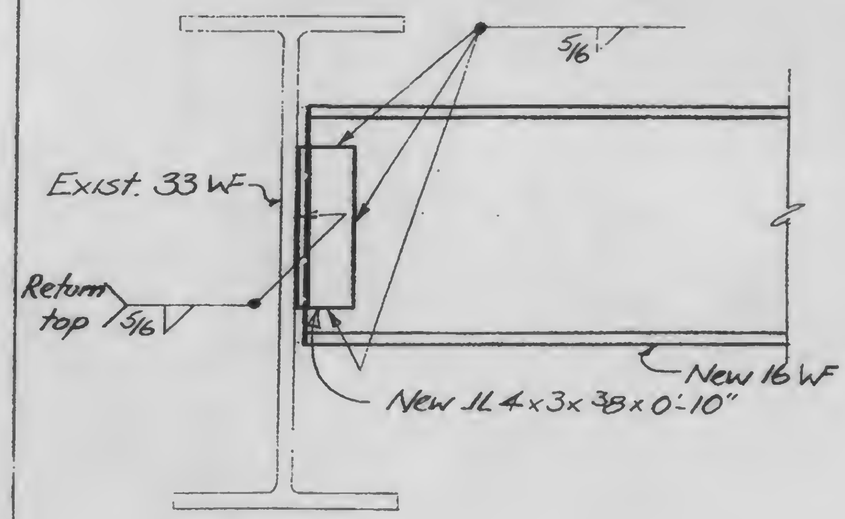

B

A

C

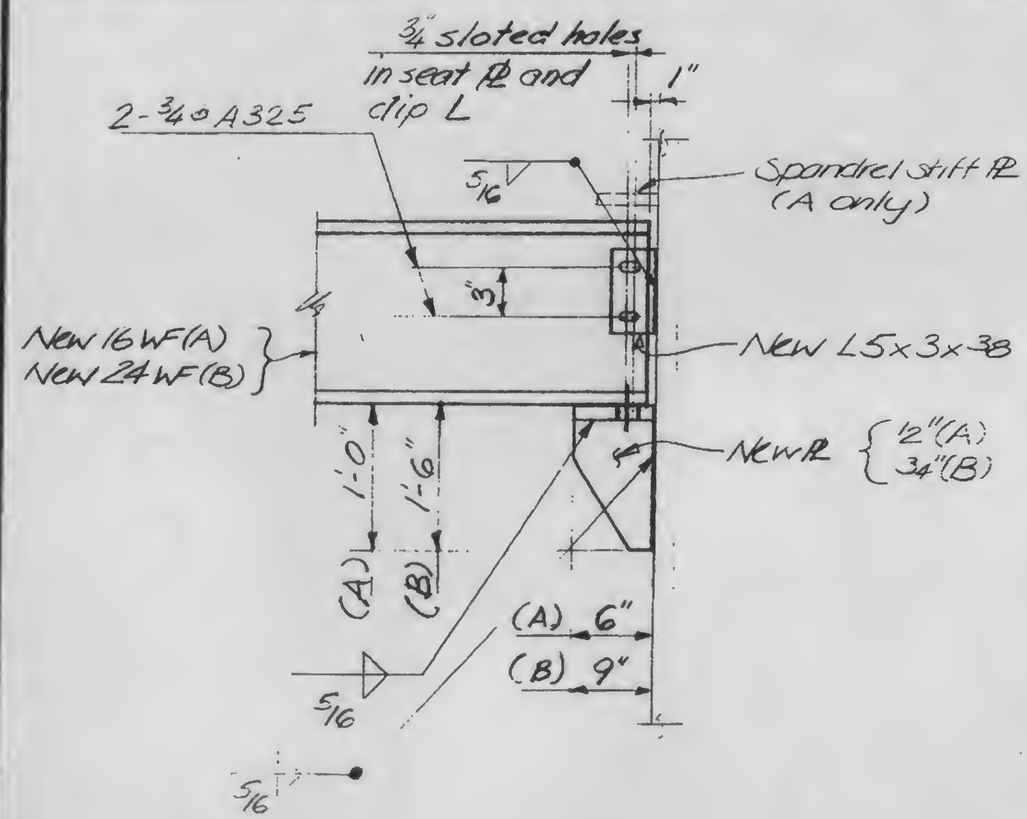

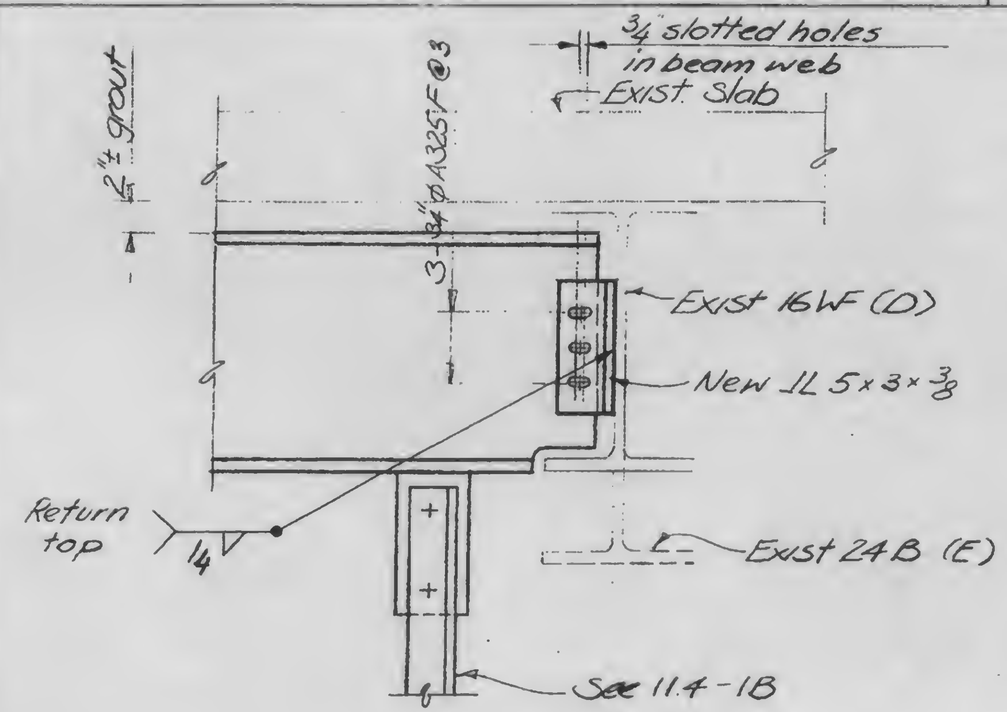

D

a E

LICENSED PROFESSIONAL ENGINEER
LESLIE E. ROBERTSON
No. 34360
UNIVERSITY OF THE STATE OF NEW YORK

DESIGNED: K. Chiang

DRAWN: John Fontana

REVIEWED: W. Cole

13-K11.2-3.1

SKILLING, HELLE, CHRISTIANSEN, ROBERTSON — Structural & Civil Engineers

PROJECT: THE WORLD TRADE CENTER | TITLE: EL. 310 ZONE K - F.A. INTAKE CONN. DETAILS | DATE: 5-7-73

REVISIONS

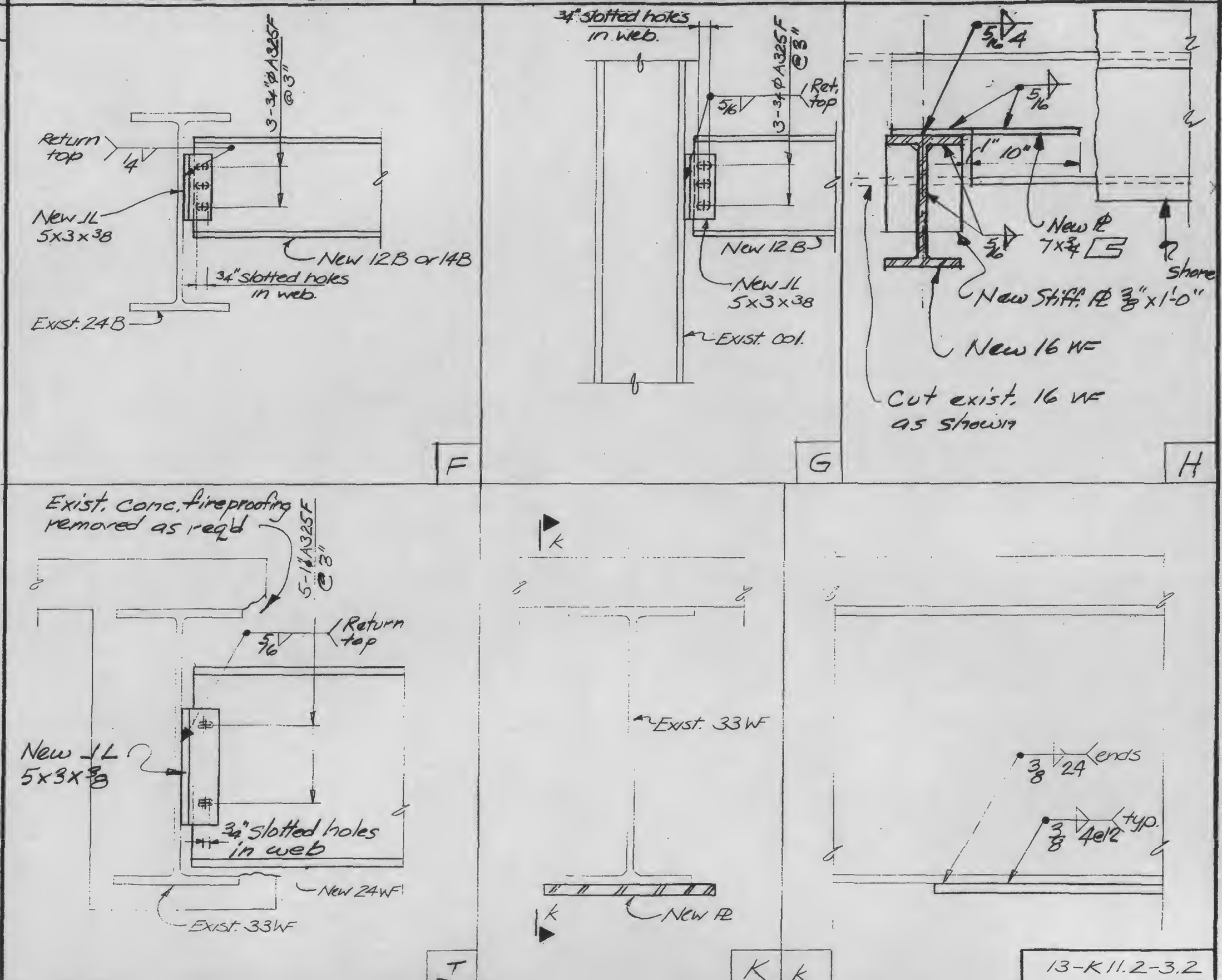

LICENSED PROFESSIONAL ENGINEER — LESLIE E. ROBERTSON — No 34360 — UNIVERSITY OF THE STATE OF NEW YORK

DESIGNED

DRAWN Banks

REVIEWED Grab

13-K 11.2-3.2

SKILLING, HELLE, CHRISTIANSEN, ROBERTSON — Structural & Civil Engineers

PROJECT: THE WORLD TRADE CENTER

TITLE: El. 310 - ZONE K5 - SERVICE ELEV.-CONN. DETAILS

DATE: 5-7-73

REVISIONS

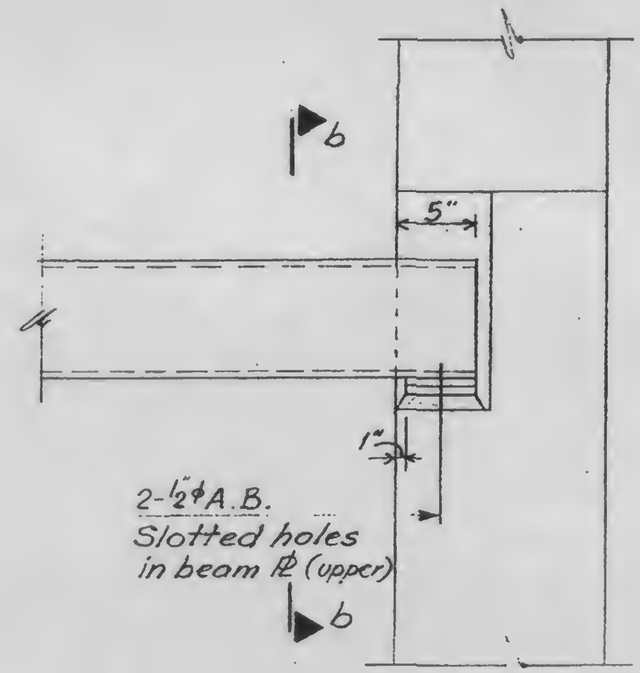

A

a

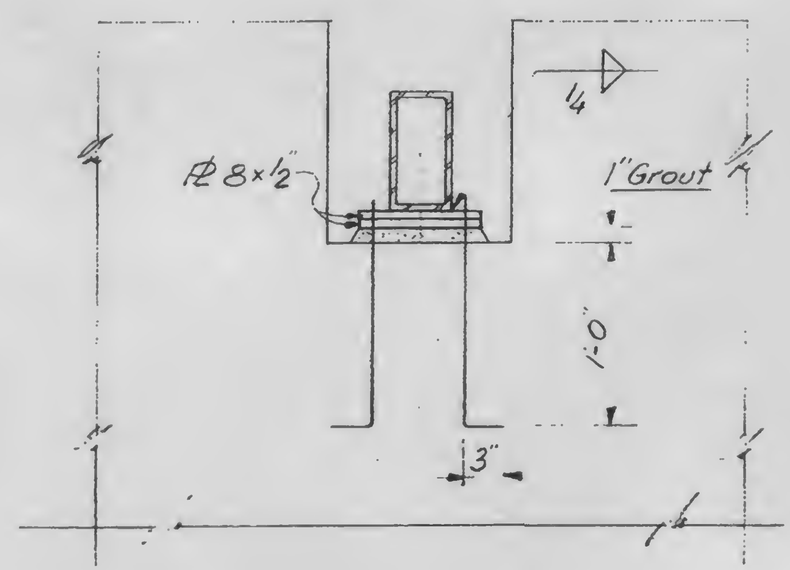

LICENSED PROFESSIONAL ENGINEER
LESLIE E. ROBERTSON
No 34360
UNIVERSITY OF THE STATE OF NEW YORK

DESIGNED: K. Chiang

DRAWN:

REVIEWED:

13-K11.2-4.1

SKILLING, HELLE, CHRISTIANSEN, ROBERTSON — Structural & Civil Engineers

PROJECT: THE WORLD TRADE CENTER

TITLE: EL. 310 - ZONE K5 - SERVICE ELEV. - CONN. DETAILS

DATE: 5-7-73

REVISIONS

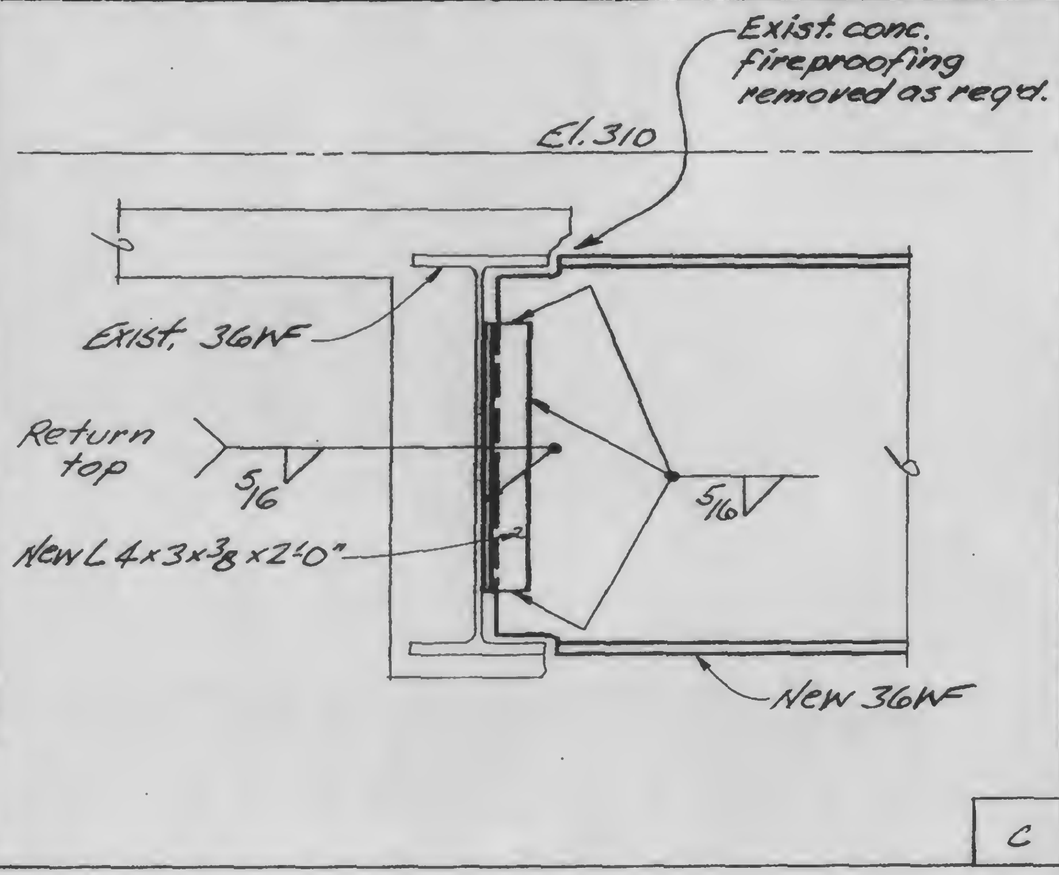

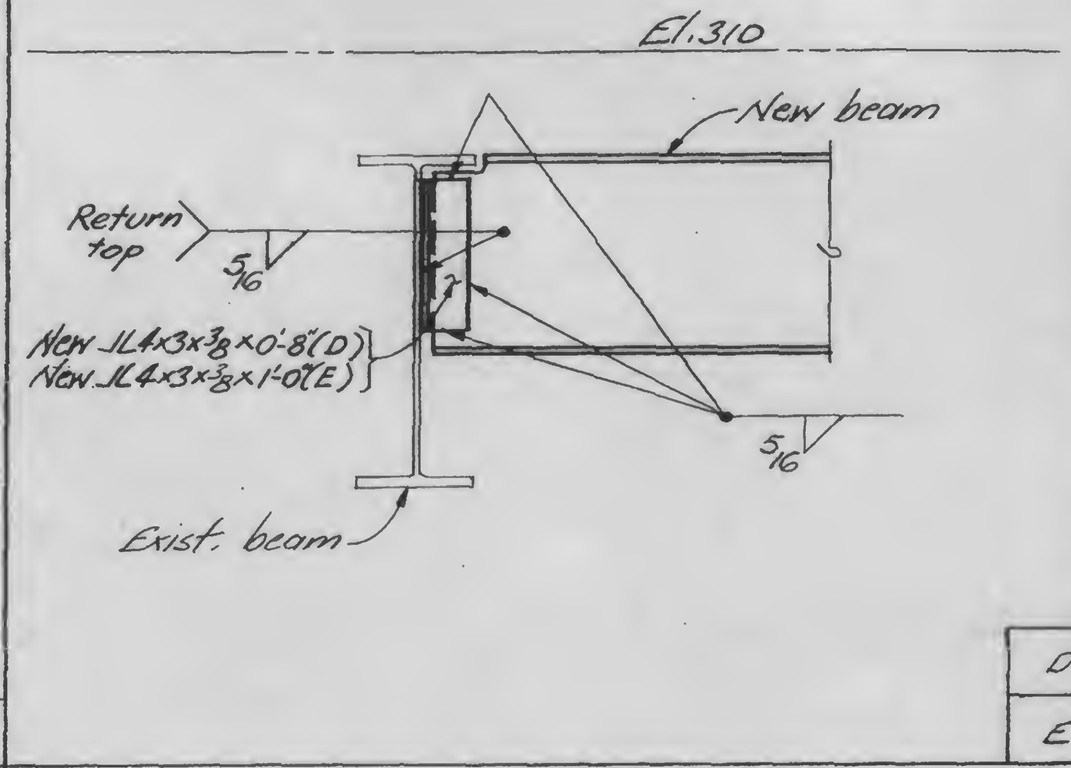

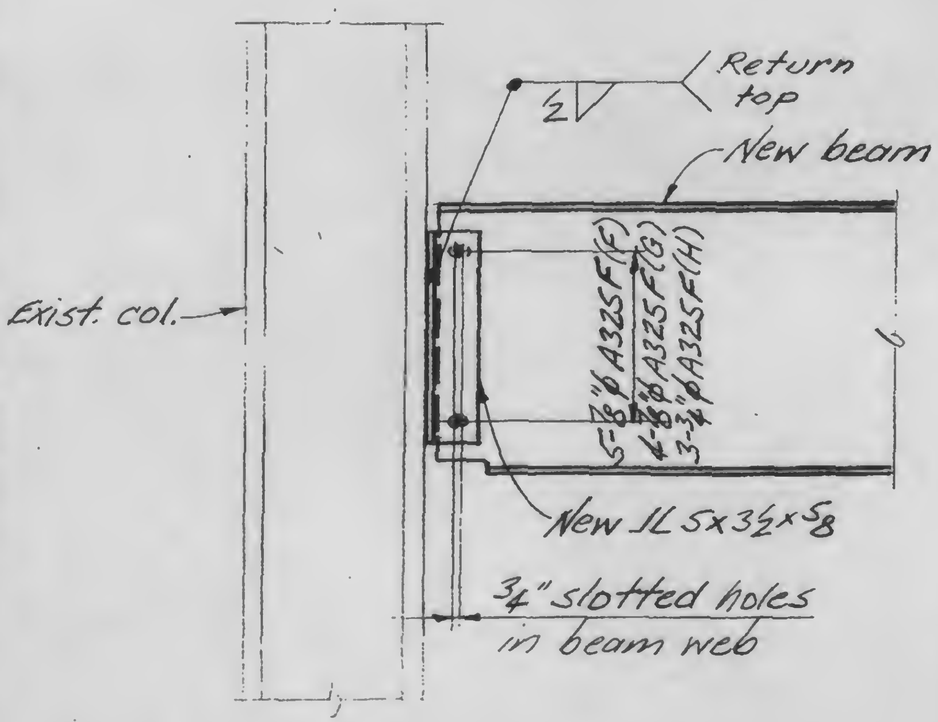

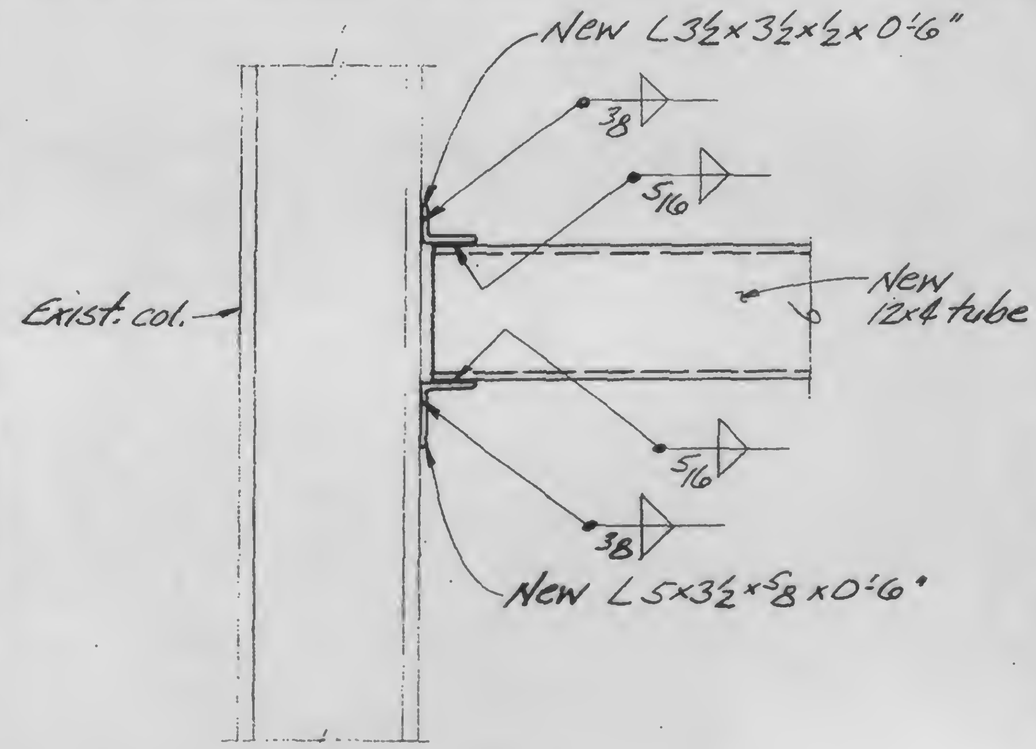

LICENSED PROFESSIONAL ENGINEER — LESLIE E. ROBERTSON — No. 34360 — UNIVERSITY OF THE STATE OF NEW YORK

DESIGNED

DRAWN J. A.

REVIEWED

13-K-11.2-4.2

SKILLING, HELLE, CHRISTIANSEN, ROBERTSON — Structural & Civil Engineers

PROJECT: THE WORLD TRADE CENTER | TITLE: EL 310 - ZONE K5 - ESC. H3 & 4 - CONN. DETAILS | DATE: 5-7-73

REVISIONS

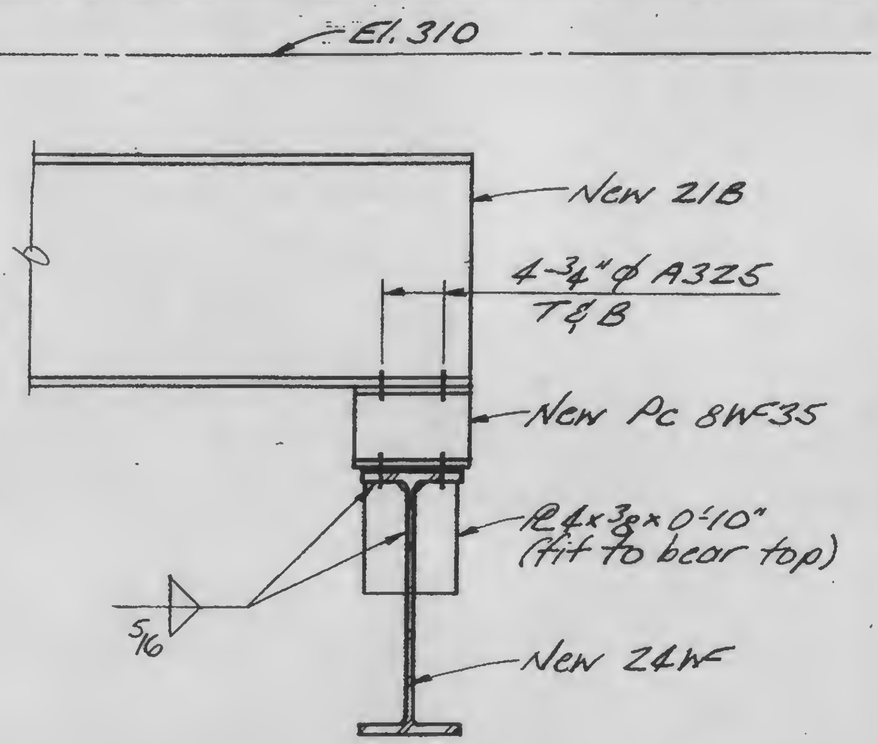

A

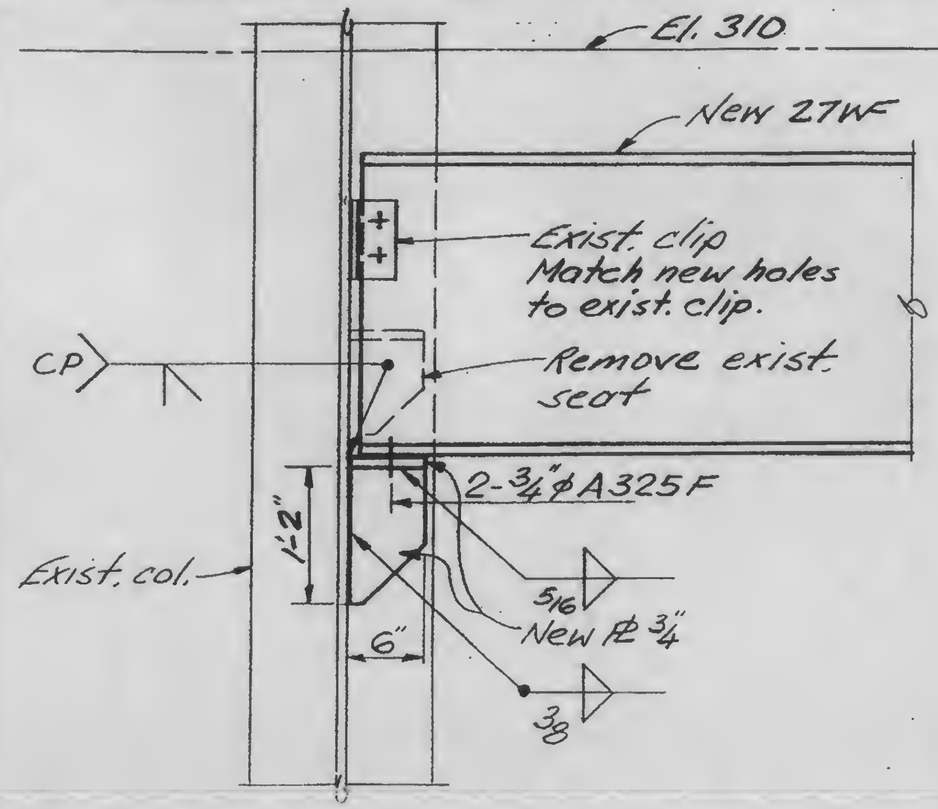

B

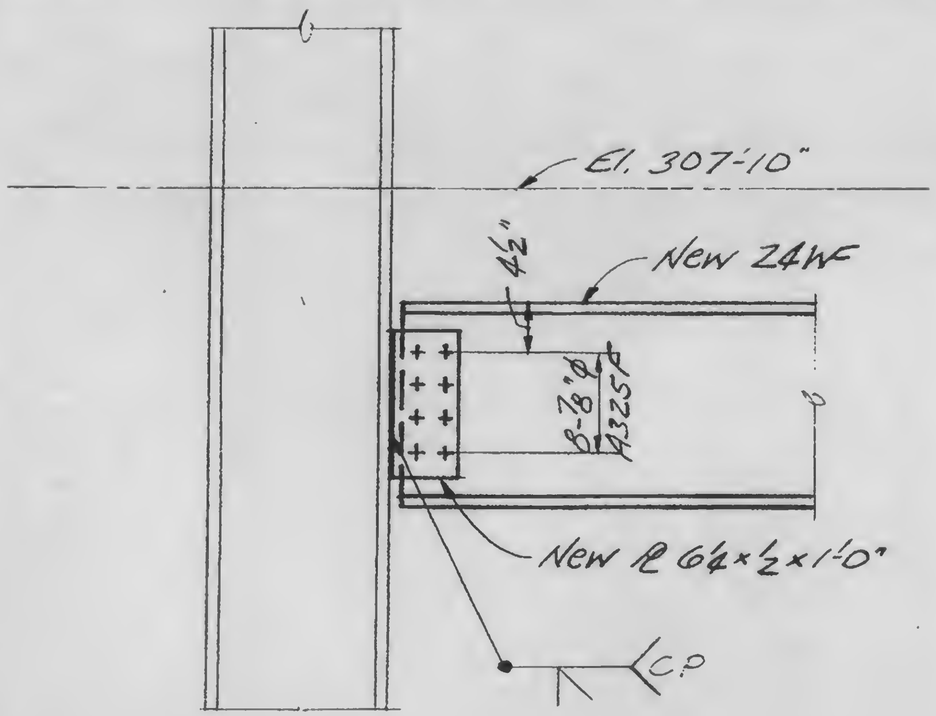

C

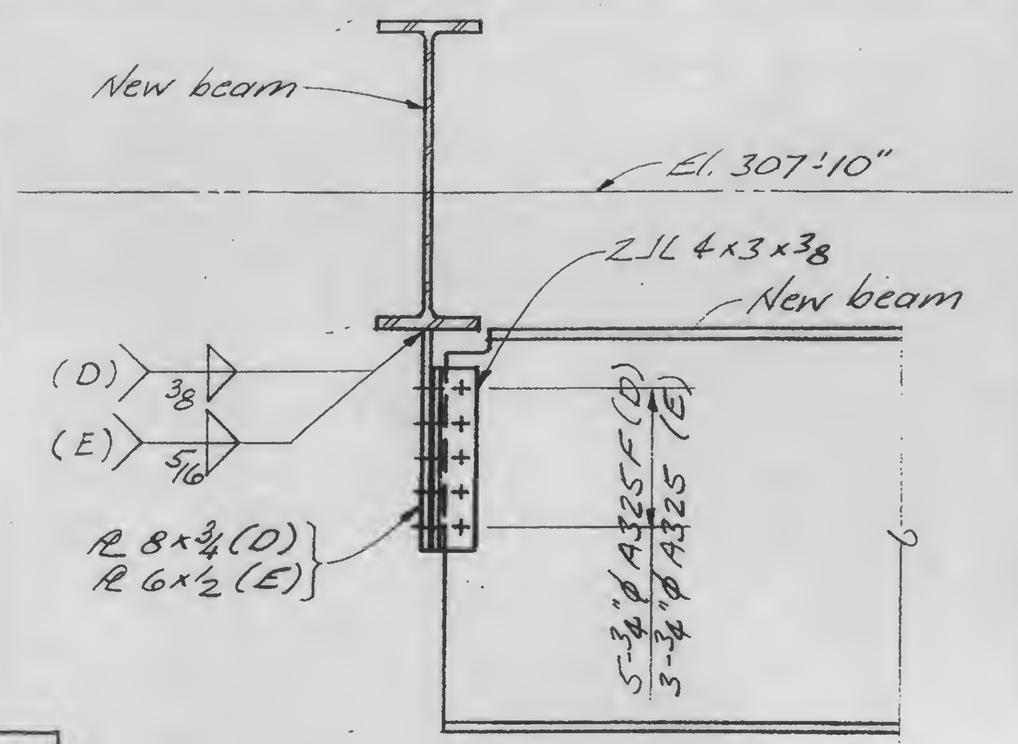

D

E

13-K11.2-5.1

LICENSED PROFESSIONAL ENGINEER — LESLIE E. ROBERTSON — No. 34360 — UNIVERSITY OF THE STATE OF NEW YORK

DESIGNED: KC

DRAWN: JA

REVIEWED: WAB

SKILLING, HELLE, CHRISTIANSEN, ROBERTSON — Structural & Civil Engineers

PROJECT: THE WORLD TRADE CENTER

TITLE: EL 310 ZONE K5 ESC. H3 & 4 CONN. DETAIL

DATE: 5-7-73

REVISIONS

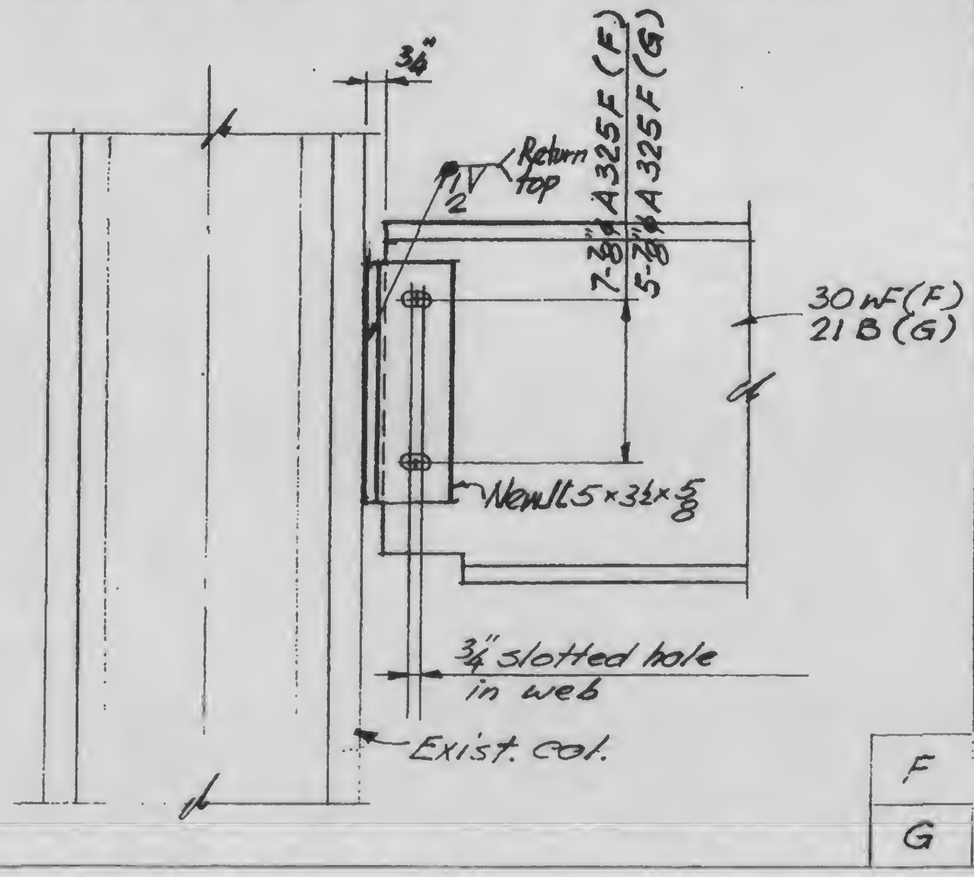

LICENSED PROFESSIONAL ENGINEER
LESLIE E. ROBERTSON
No. 34360
UNIVERSITY OF THE STATE OF NEW YORK

DESIGNED

DRAWN John Fuscaro

REVIEWED WCB

13-K11.2-5.2

SKILLING, HELLE, CHRISTIANSEN, ROBERTSON — Structural & Civil Engineers

PROJECT: THE WORLD TRADE CENTER

TITLE: EL. 310 ZONE K3 & K5 - FIRE DAMAGE - CONN. DETAILS

DATE: 5-7-73

REVISIONS

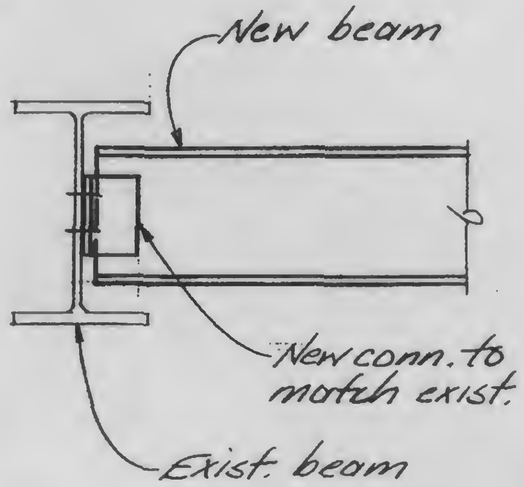

A

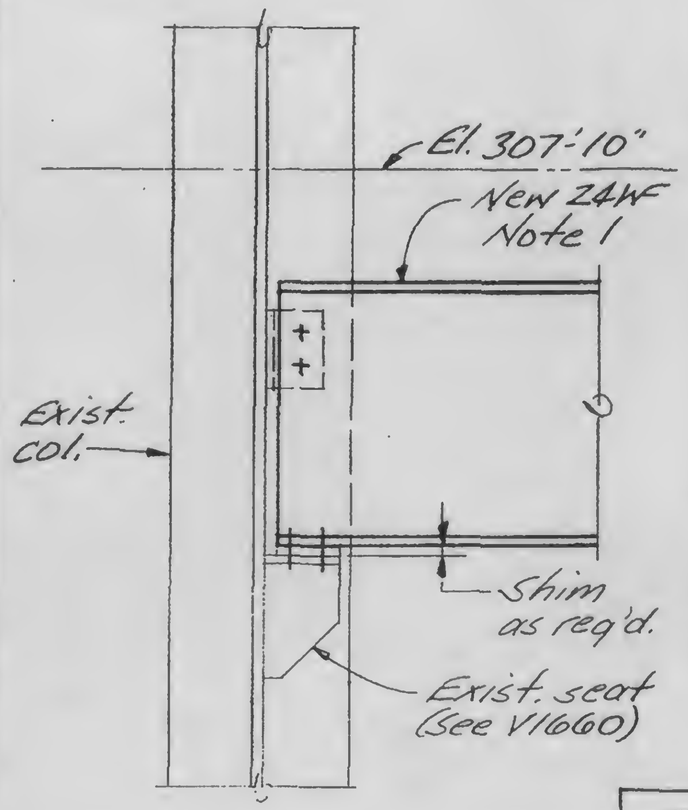

B

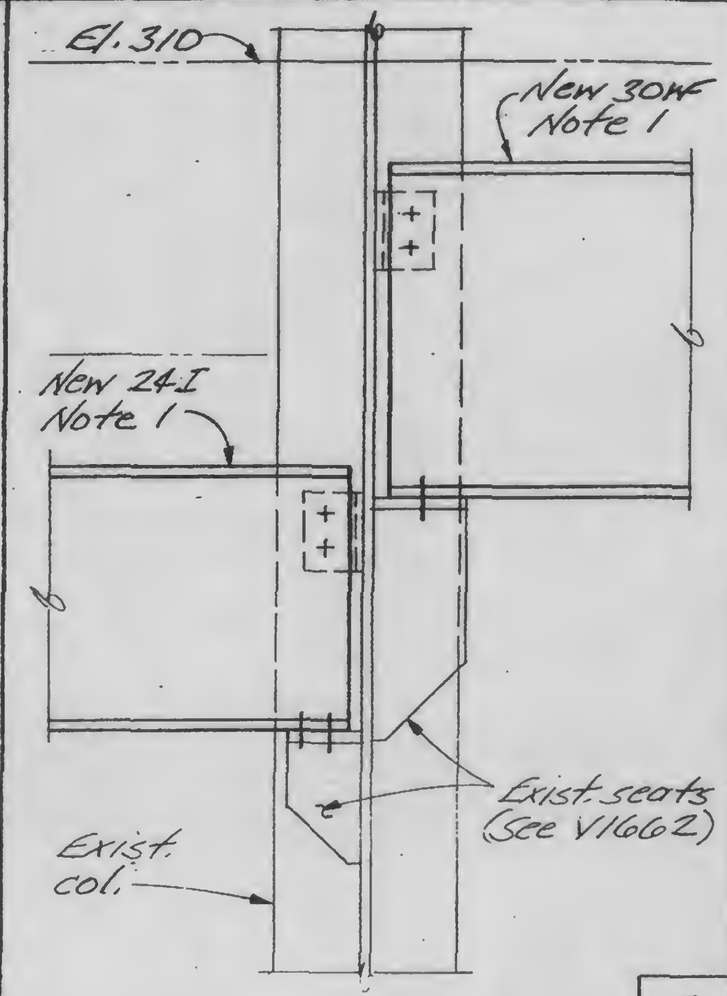

C

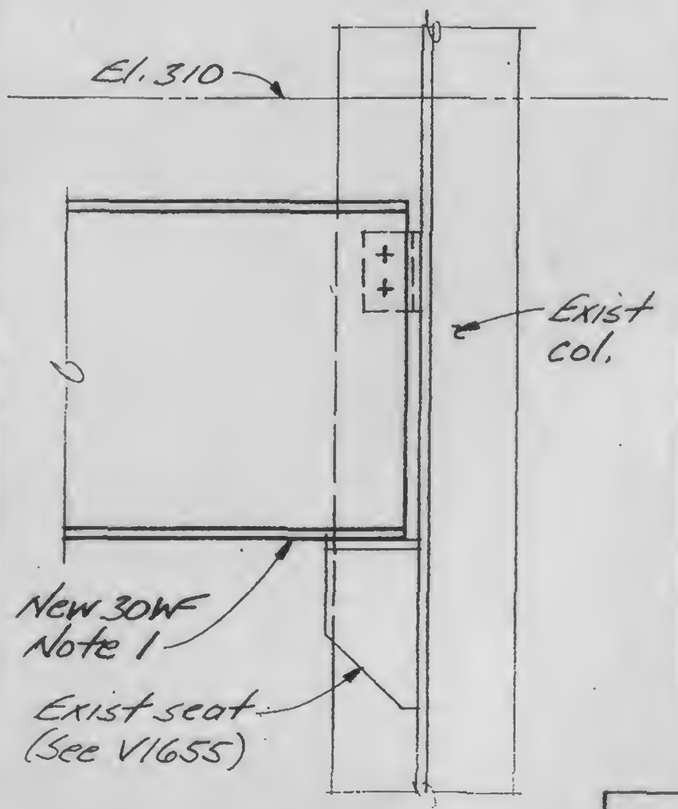

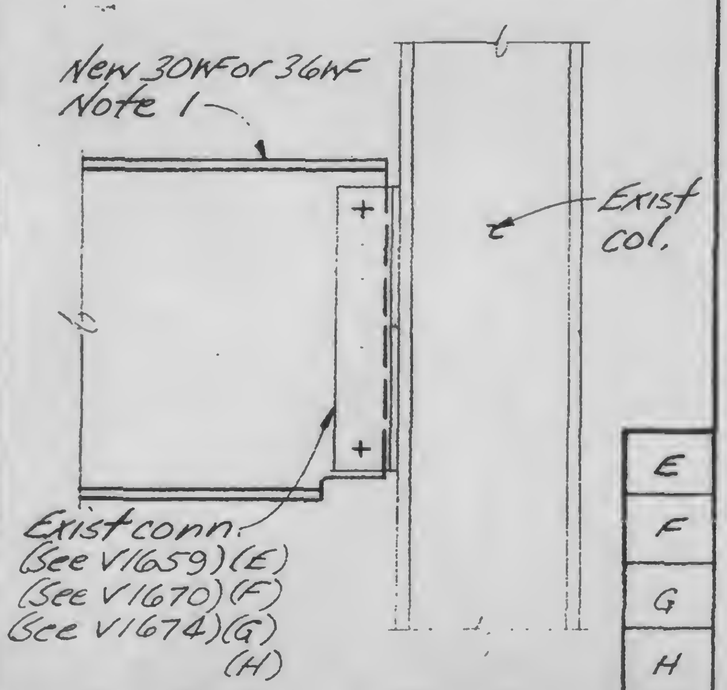

E
F
G
H

Notes:
1. Fabricate new beams to match exist. conn.

LICENSED PROFESSIONAL ENGINEER — LESLIE E. ROBERTSON — No. 34360 — UNIVERSITY OF THE STATE OF NEW YORK

DESIGNED

DRAWN J. G.

REVIEWED WAB

13-K11.3-1

SKILLING, HELLE, CHRISTIANSEN, ROBERTSON — Structural & Civil Engineers

PROJECT: THE WORLD TRADE CENTER

TITLE: EL. 310 R3 & K5 - FIRE DAMAGE-CONN. DETAILS

DATE: 5-7-73

REVISIONS

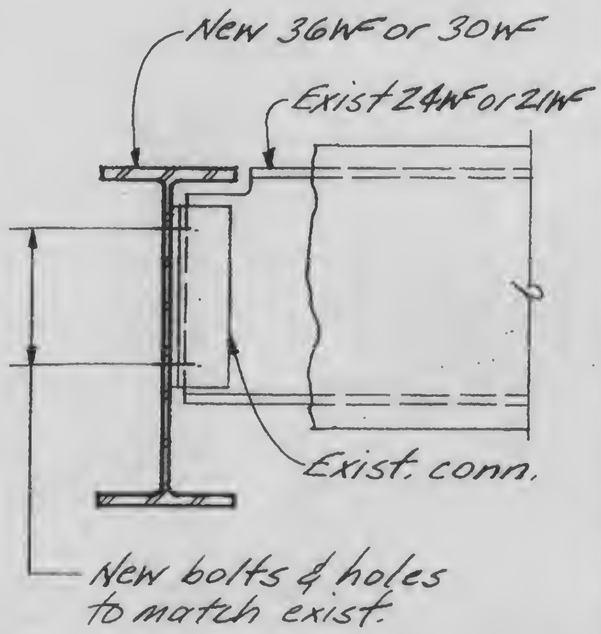

A

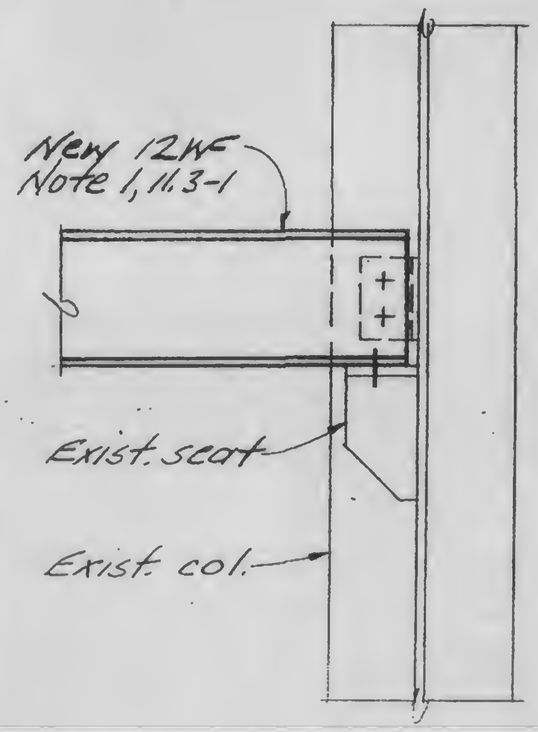

B

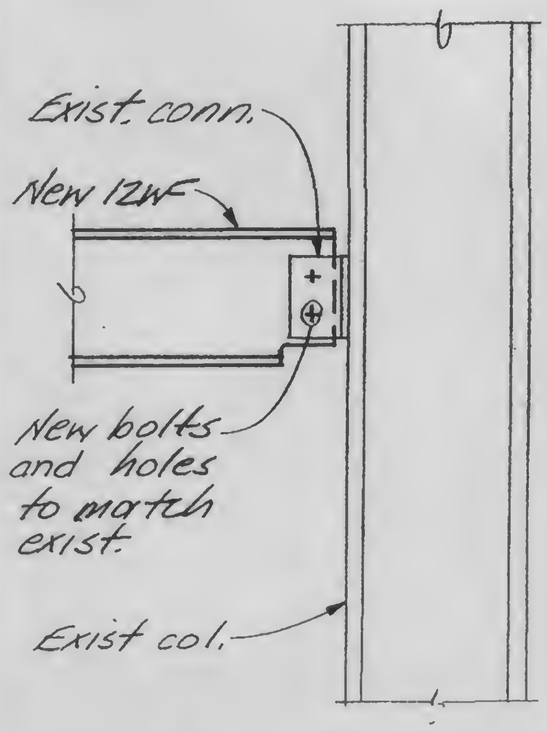

C

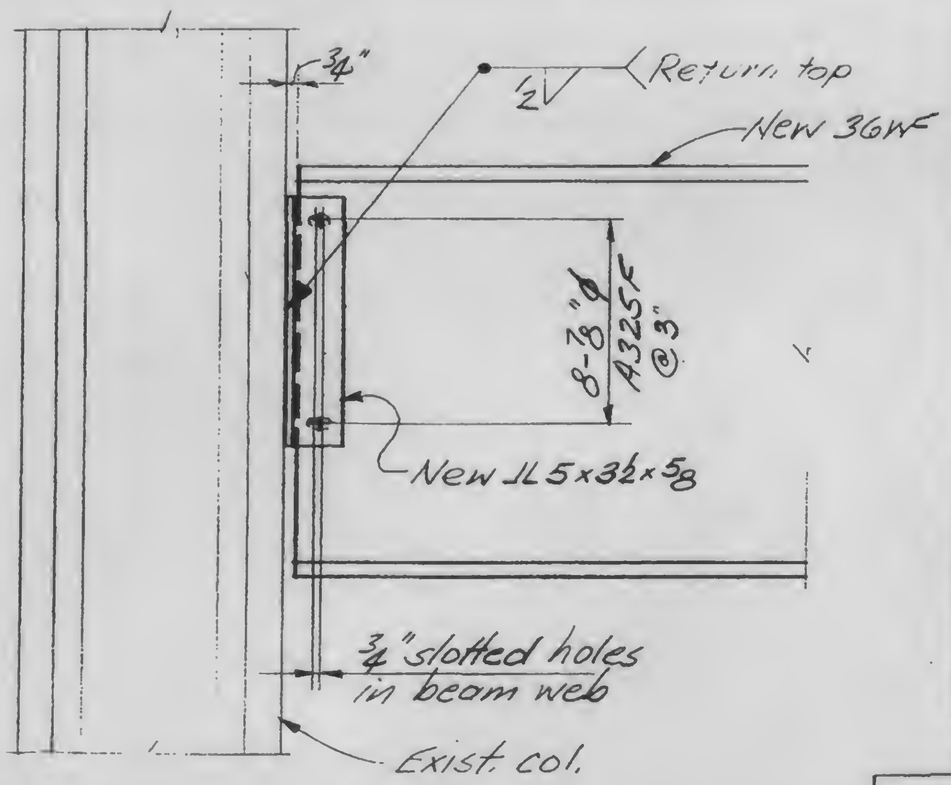

D

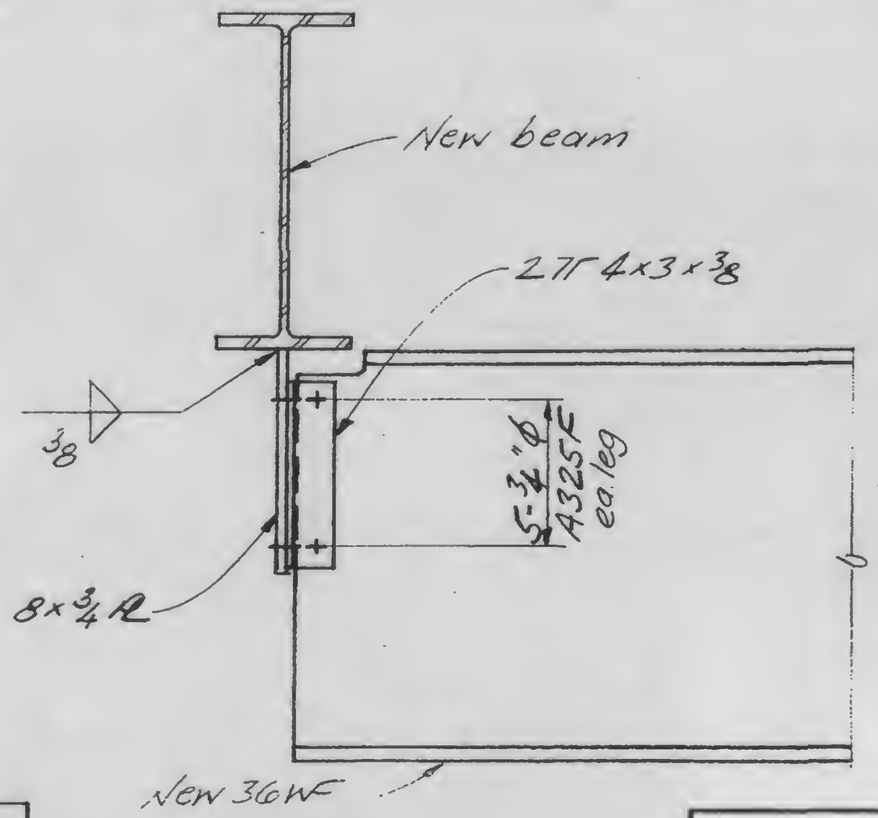

E

13-K11.3-2

LICENSED PROFESSIONAL ENGINEER — LESLIE E. ROBERTSON — No. 34360 — UNIVERSITY OF THE STATE OF NEW YORK

DESIGNED: KC

DRAWN: JA

REVIEWED: WAB

SKILLING, HELLE, CHRISTIANSEN, ROBERTSON — Structural & Civil Engineers

PROJECT: THE WORLD TRADE CENTER | TITLE: EL. 310 - ZONE K-5 - HANGER DETAILS. | DATE: 5-7-73

REVISIONS

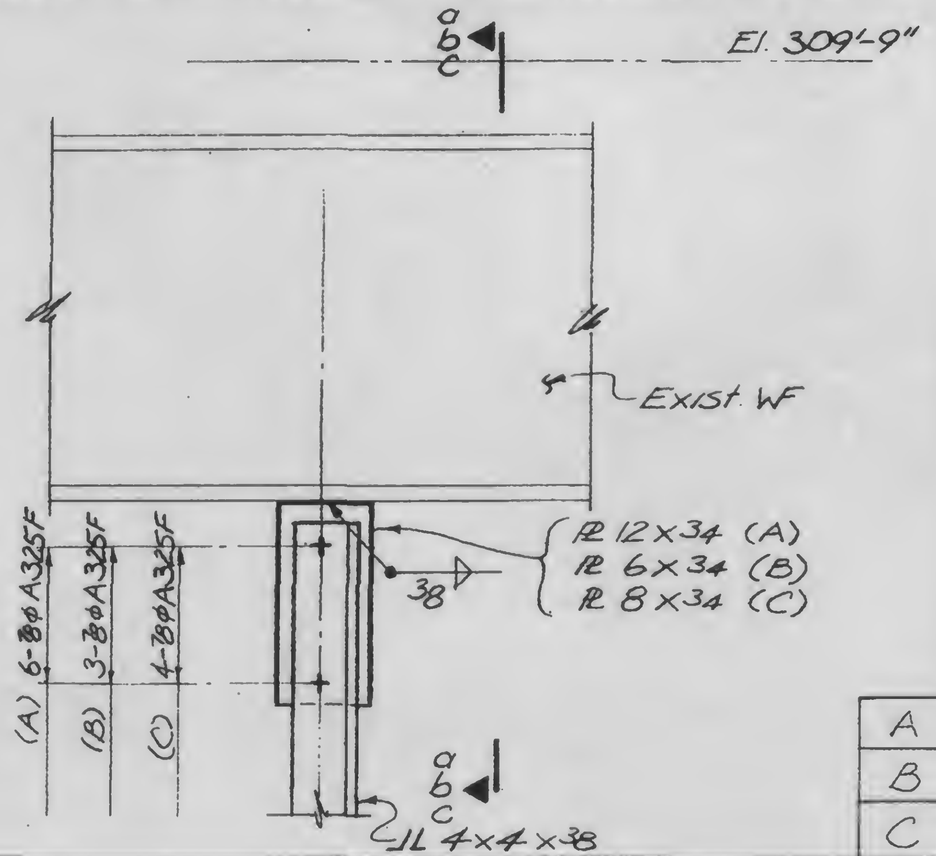

A
B
C

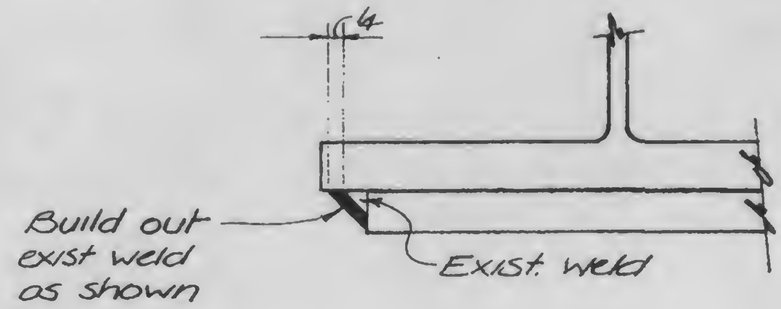

aa

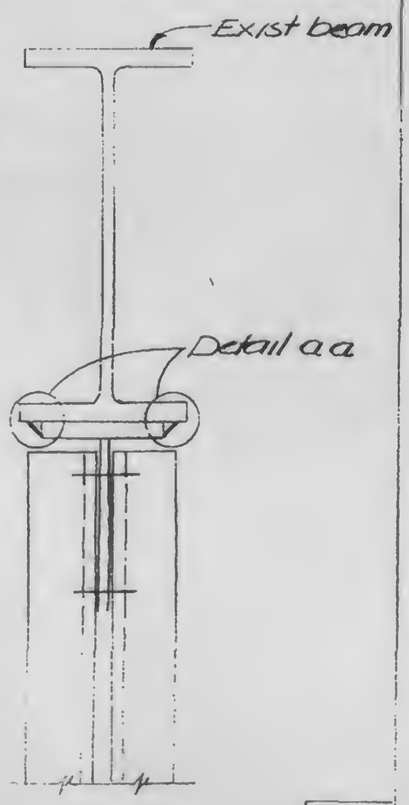

a

b

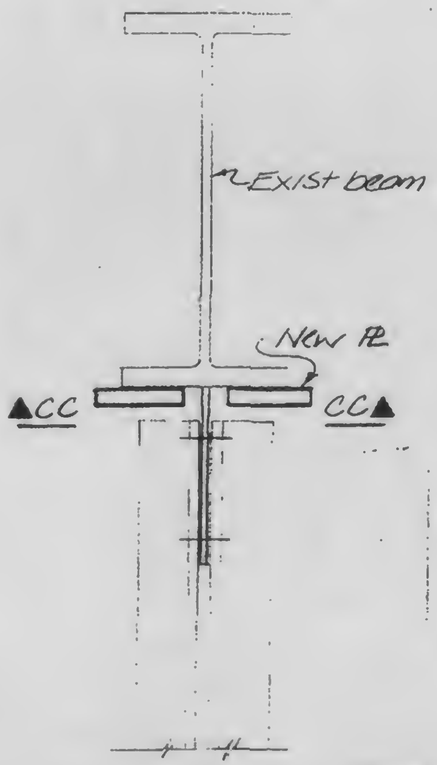

c CC

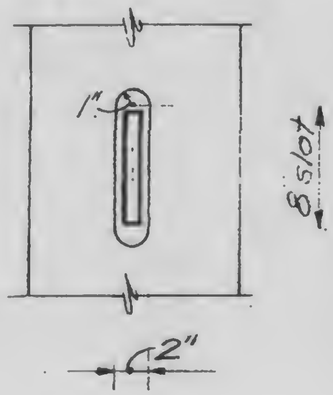

13-K11.4-1

LICENSED PROFESSIONAL ENGINEER
LESLIE E. ROBERTSON
No. 34960
UNIVERSITY OF THE STATE OF NEW YORK

DESIGNED: L. Chiang
DRAWN: J.G.
REVIEWED: WCB

SKILLING, HELLE, CHRISTIANSEN, ROBERTSON — Structural & Civil Engineers

PROJECT: THE WORLD TRADE CENTER

TITLE: EL. 303'-6"-ZONE K5-MECH. PLATFORM-CONN. DETAILS

DATE: 5-7-73

REVISIONS

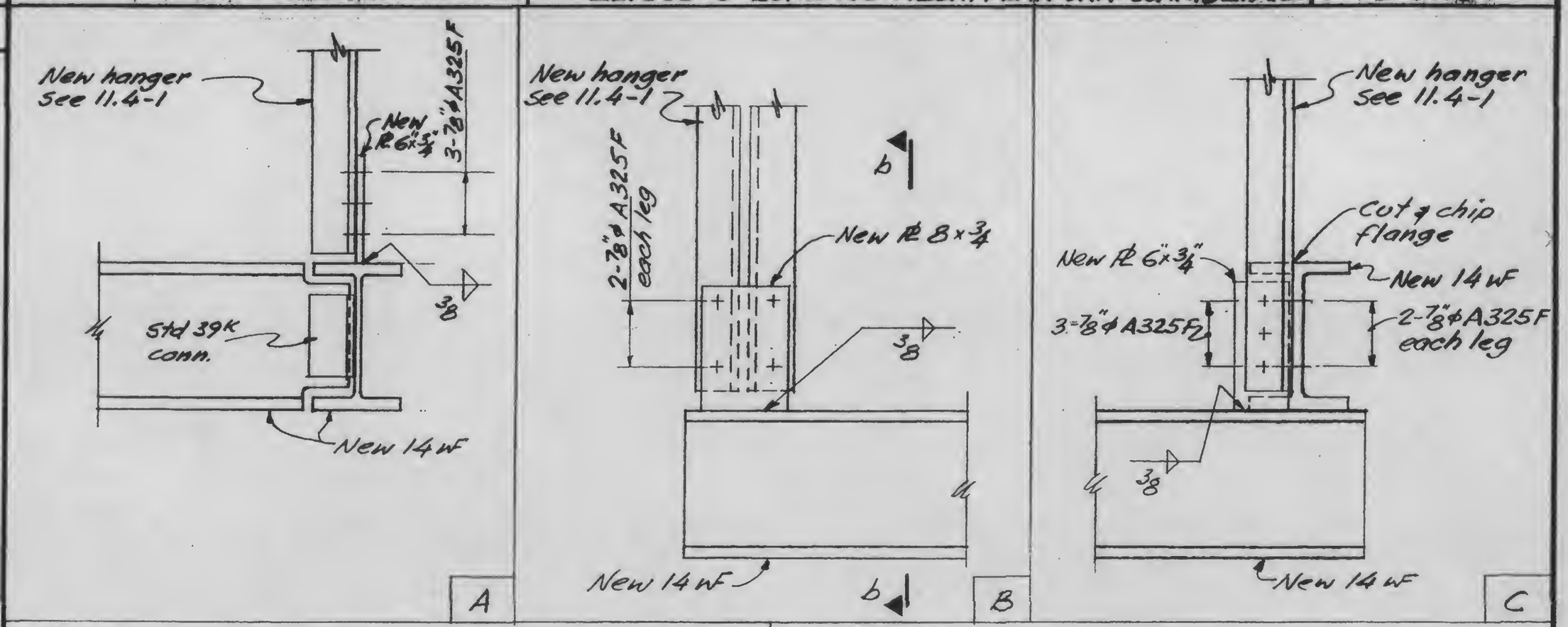

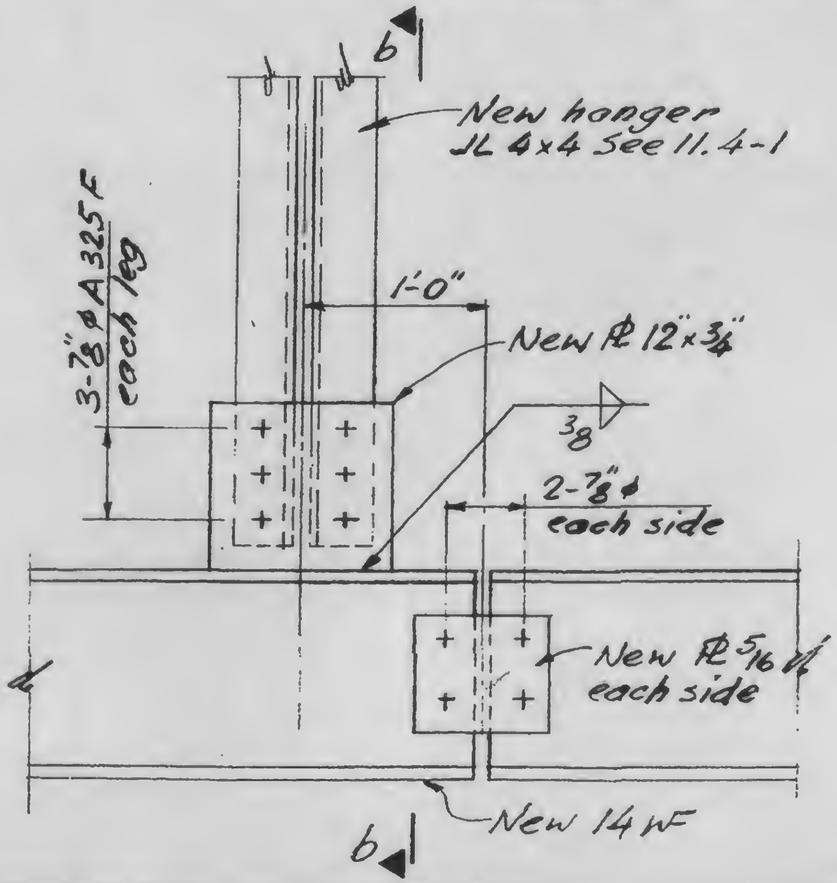

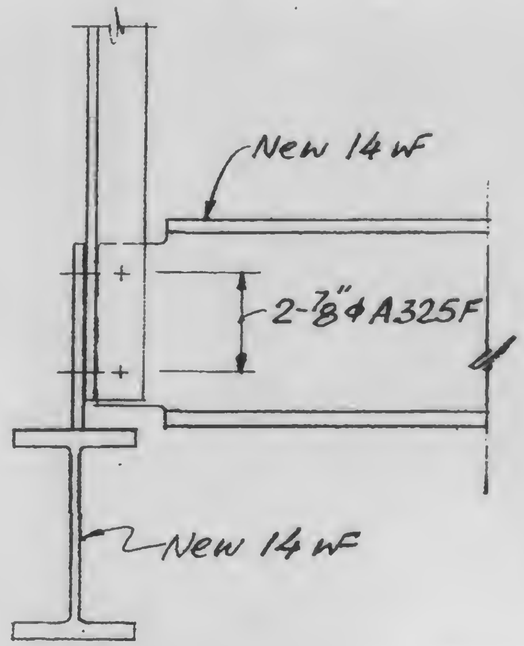

b

13-K11.4-2

LICENSED PROFESSIONAL ENGINEER — LESLIE E. ROBERTSON — No. 34300 — UNIVERSITY OF THE STATE OF NEW YORK

DESIGNED

DRAWN John Gracias

REVIEWER DMB

SKILLING, HELLE, CHRISTIANSEN, ROBERTSON — Structural & Civil Engineers

PROJECT: THE WORLD TRADE CENTER

TITLE: EL. 303-6 ZONE K5 - MECH. PLATFORM CONN. DETAILS

DATE: 5-7-73

REVISIONS: 6-4-73

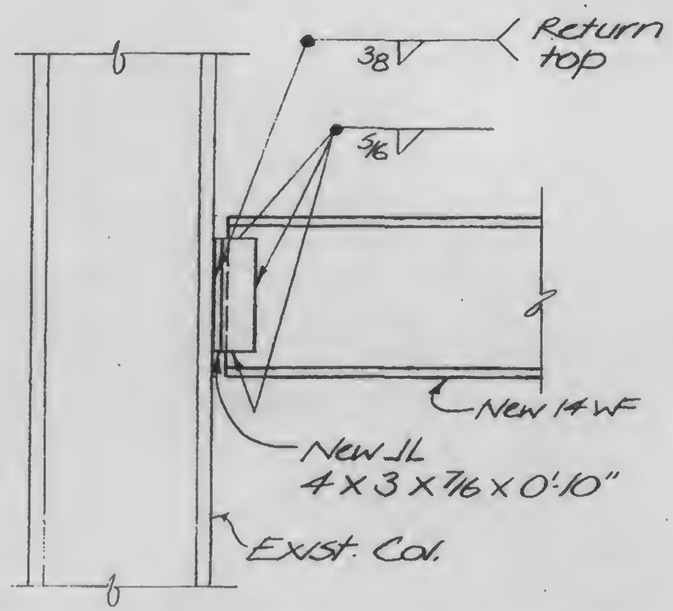

A

B

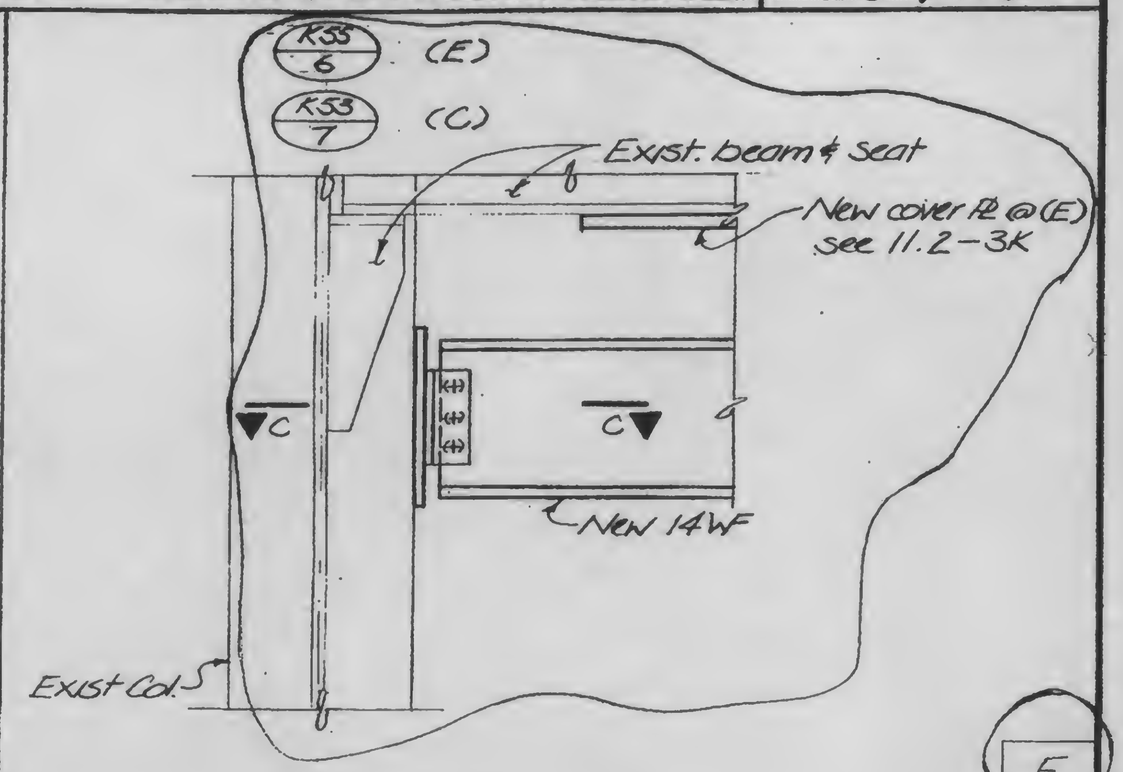

E

C

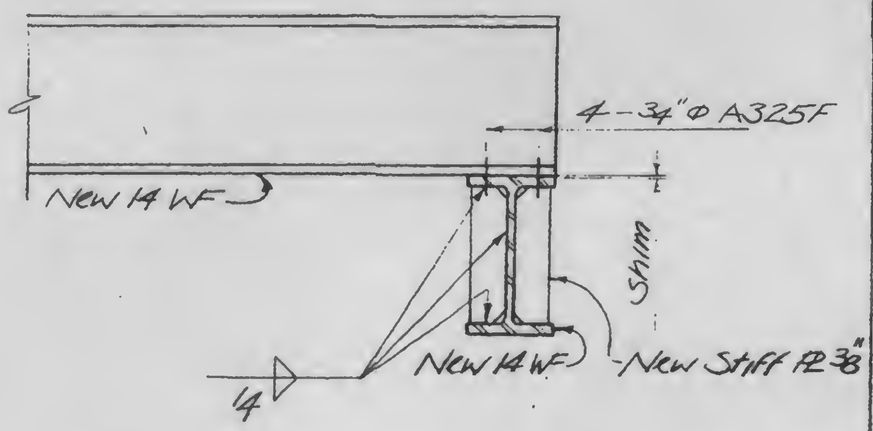

D

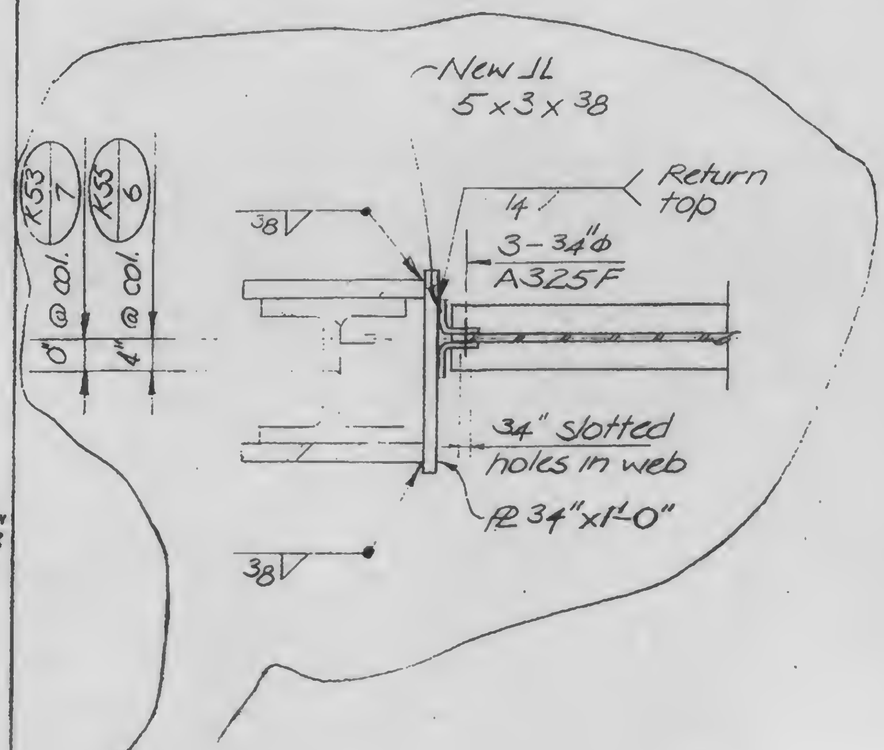

C

LICENSED PROFESSIONAL ENGINEER
LESLIE E. ROBERTSON
No. 34360
UNIVERSITY OF THE STATE OF NEW YORK

DESIGNED

DRAWN: J. Banks

REVIEWED: Web

13-K11.4-3

SKILLING, HELLE, CHRISTIANSEN, ROBERTSON - Structural & Civil Engineers

PROJECT THE WORLD TRADE CENTER | TITLE EL 320-ZONE K5-MEZZ. LEVEL-CONN. DETAIL | DATE 5-7-73

REVISIONS

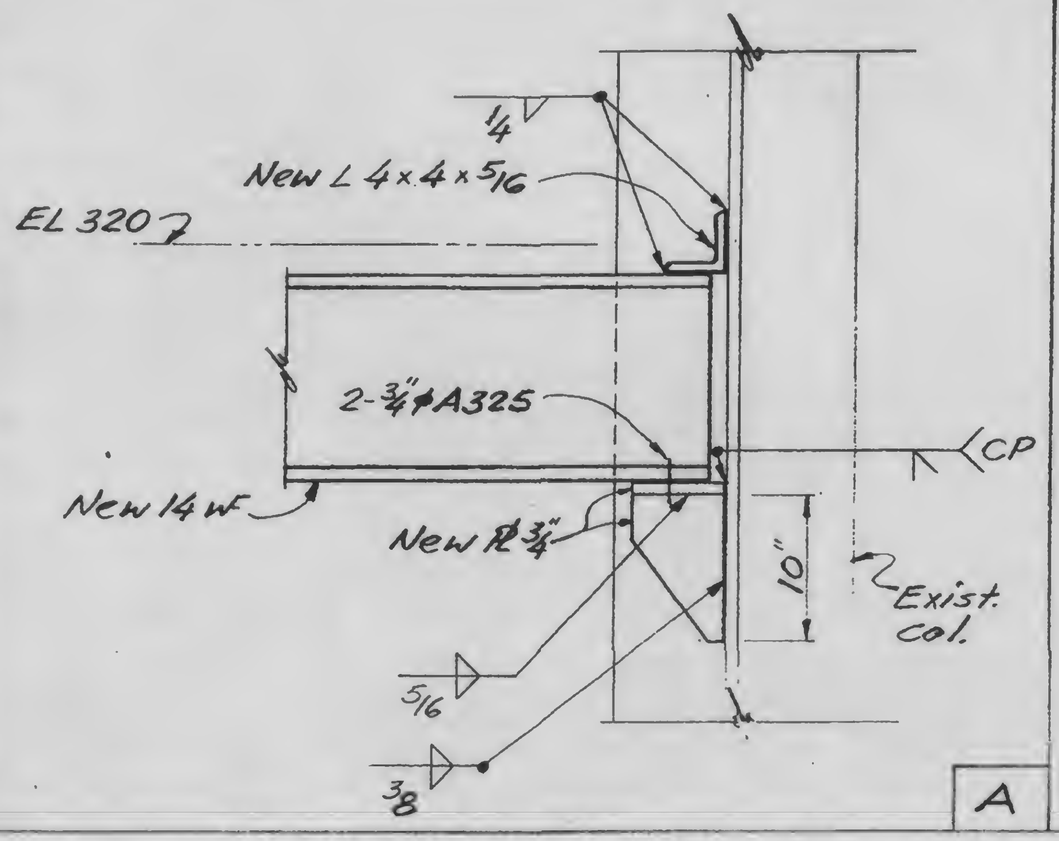

A

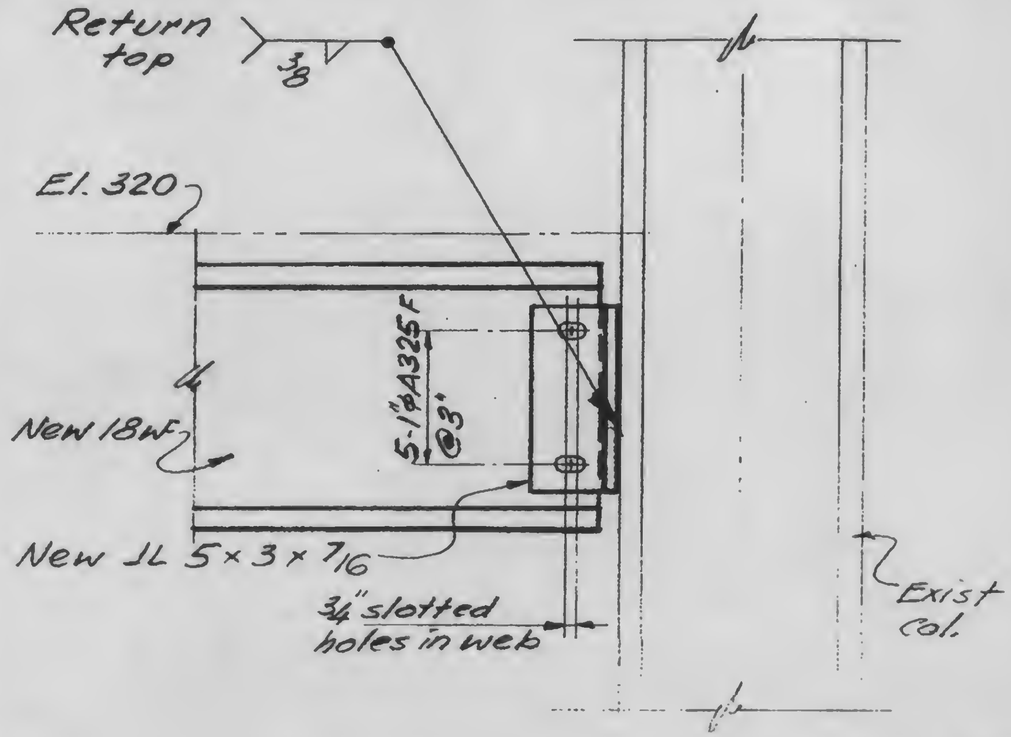

B

LICENSED PROFESSIONAL ENGINEER
LESLIE E. ROBERTSON
No. 34360
UNIVERSITY OF THE STATE OF NEW YORK

DESIGNED

DRAWN John Gonzalez

REVIEWED WAB

13-K12-1

SKILLING, HELLE, CHRISTIANSEN, ROBERTSON — Structural & Civil Engineers

PROJECT: THE WORLD TRADE CENTER

TITLE: El. 320 ZONE K3 - HANGERS - CONN. DETAILS

DATE: 5-7-73

REVISIONS

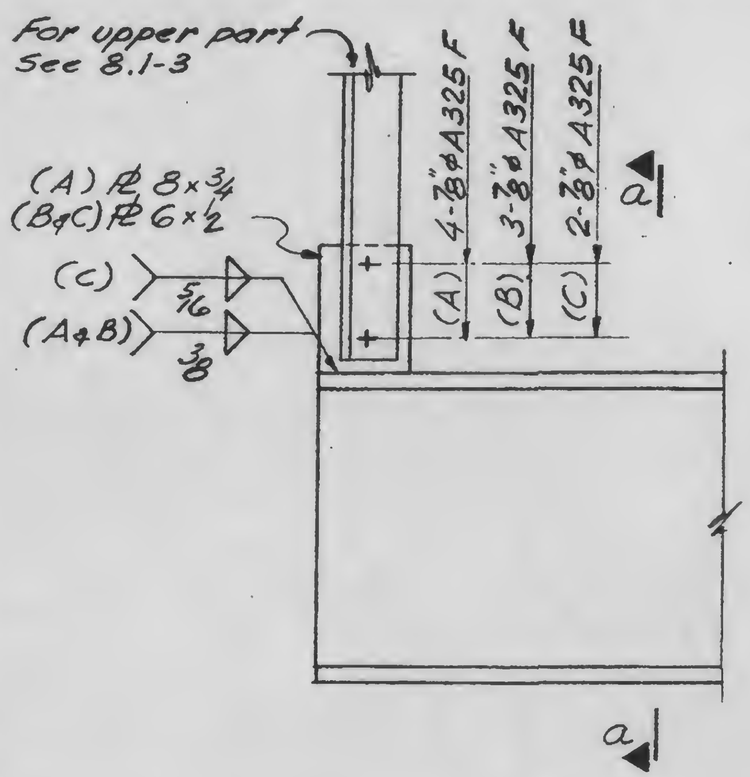

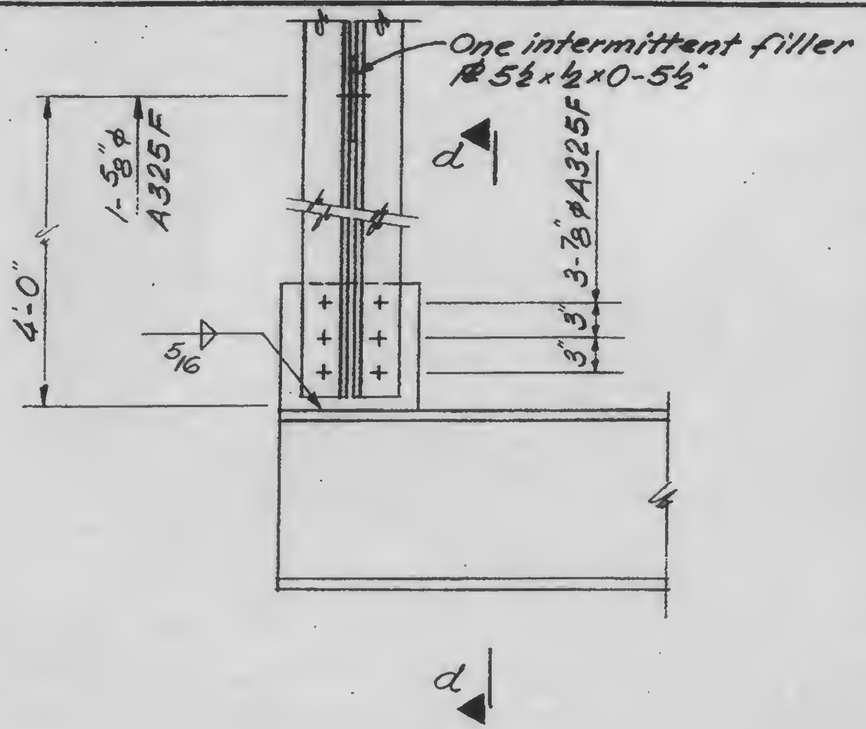

A
B
C

D

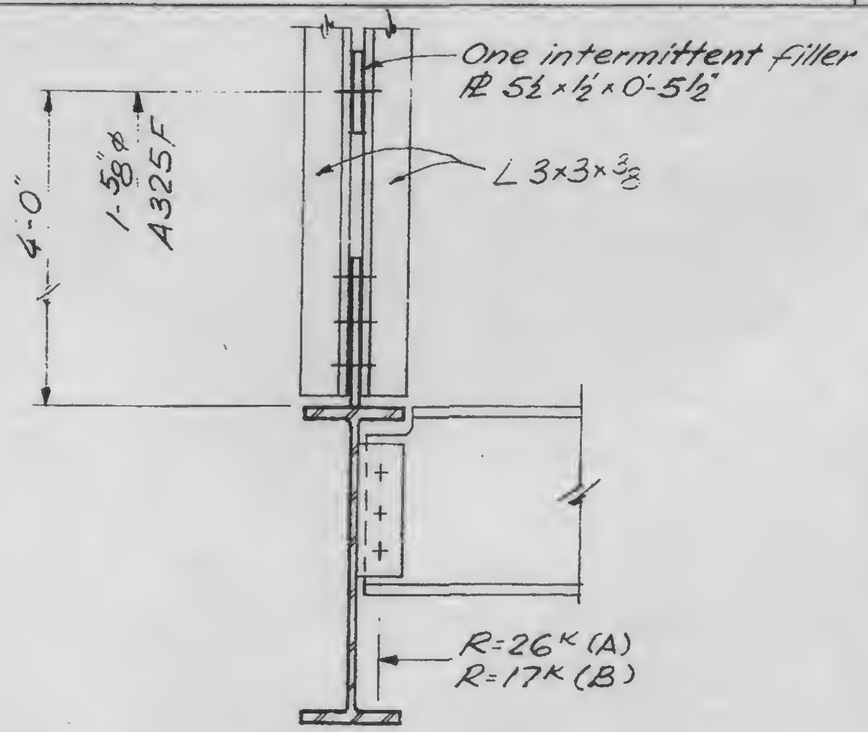

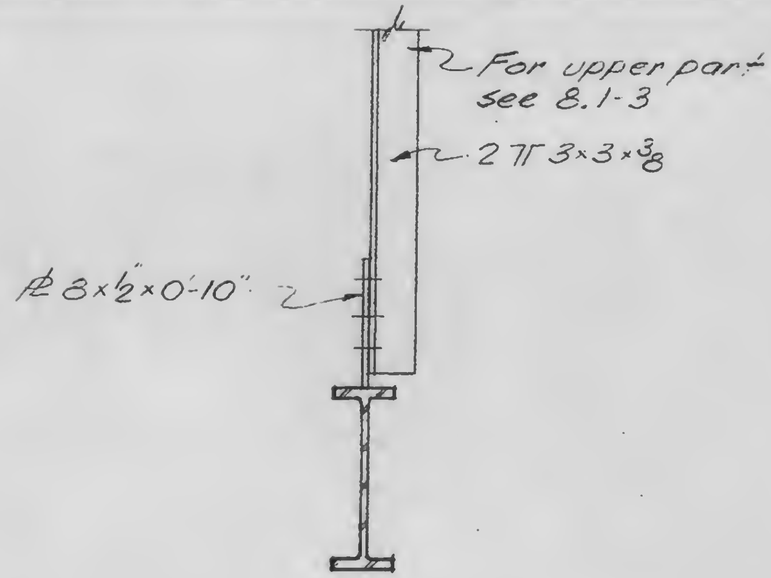

a | d

13-K12-2

LICENSED PROFESSIONAL ENGINEER
LESLIE E. ROBERTSON
No. 34360
UNIVERSITY OF THE STATE OF NEW YORK

DESIGNED: K. Chiang

DRAWN: John Fiorino

REVIEWED: WAS

SKILLING, HELLE, CHRISTIANSEN, ROBERTSON — Structural & Civil Engineers

PROJECT: THE WORLD TRADE CENTER | TITLE: SECTIONS AT AUTO LIFT - EL. 284'-0" | DATE: 1-12-73

REVISIONS

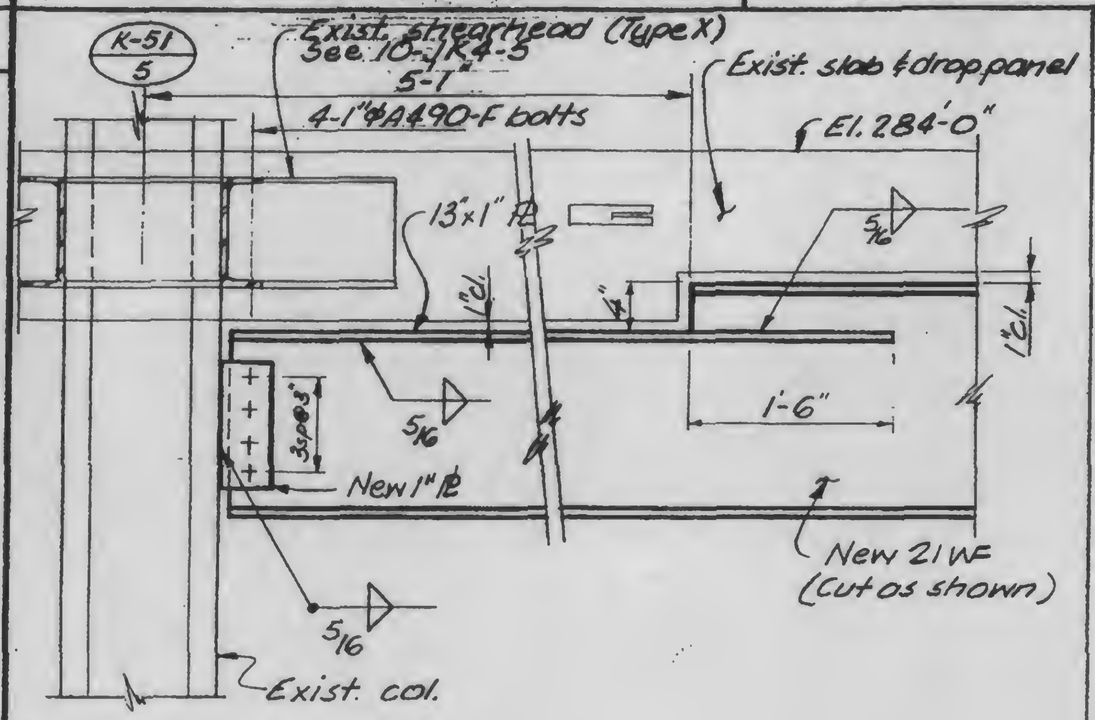

A

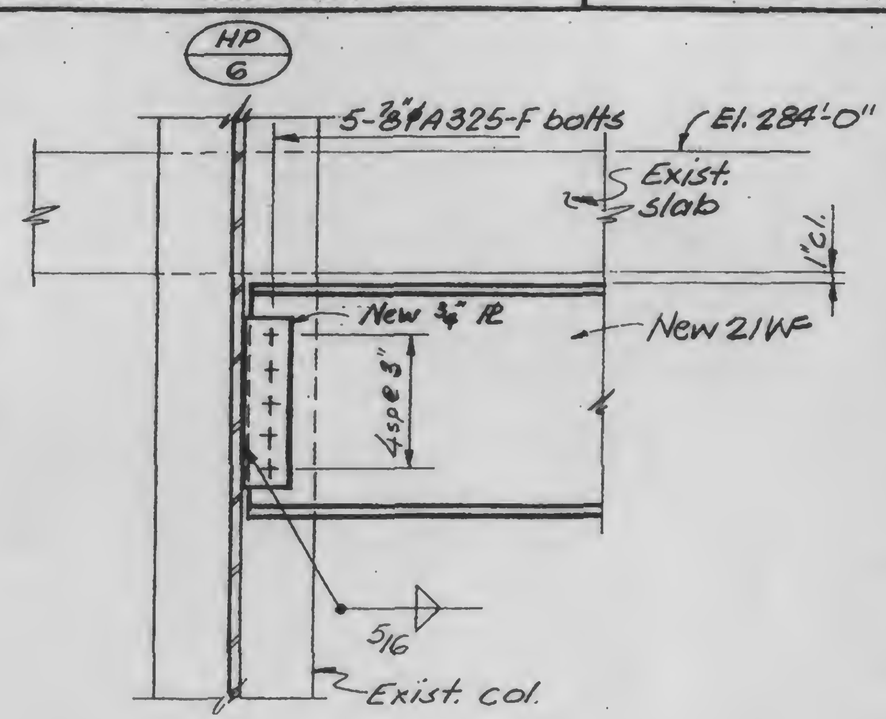

B

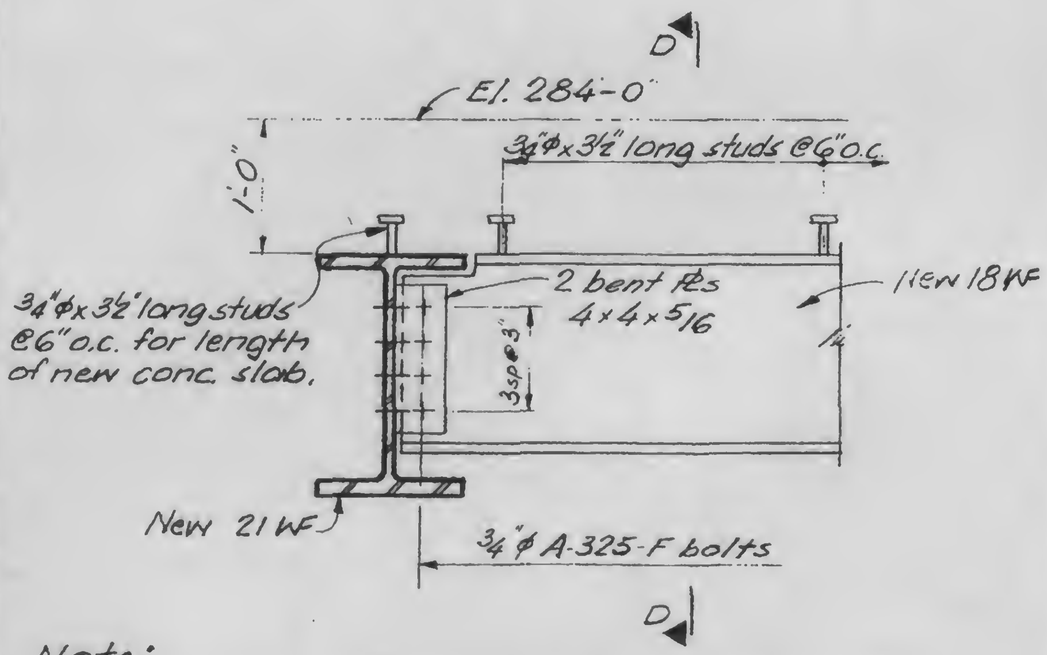

Note:
Shear studs to be omitted if steel beams are installed after conc. slab is in place.

C

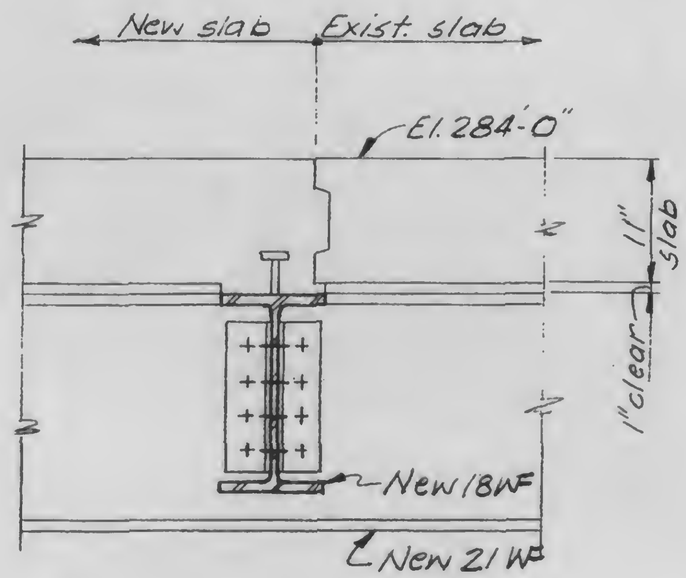

D

LICENSED PROFESSIONAL ENGINEER
LESLIE E. ROBERTSON
No. 34360
UNIVERSITY OF THE STATE OF NEW YORK

DESIGNED: DS
DRAWN: TR
REVIEWED:

13-K13-1

SKILLING, HELLE, CHRISTIANSEN, ROBERTSON — Structural & Civil Engineers

PROJECT: THE WORLD TRADE CENTER

TITLE: SECTIONS AT AUTO LIFT - EL. 284'-0"

DATE: 1-12-73

REVISIONS

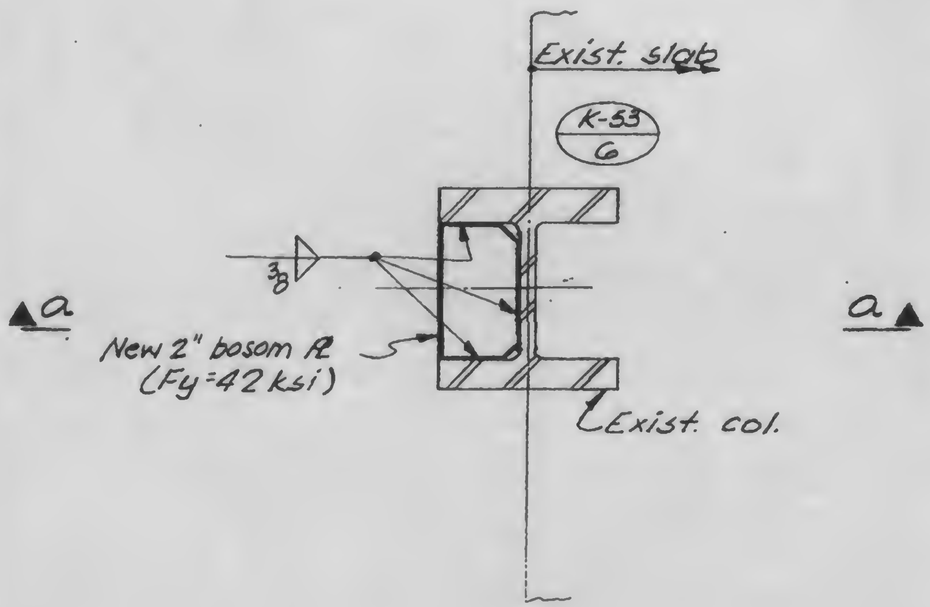

A

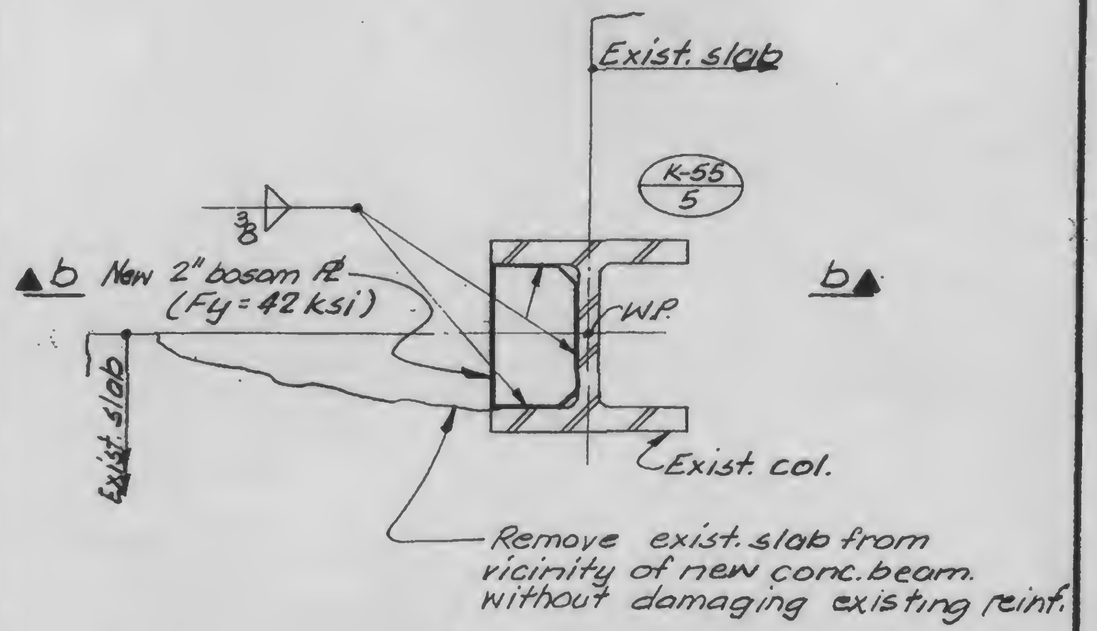

B

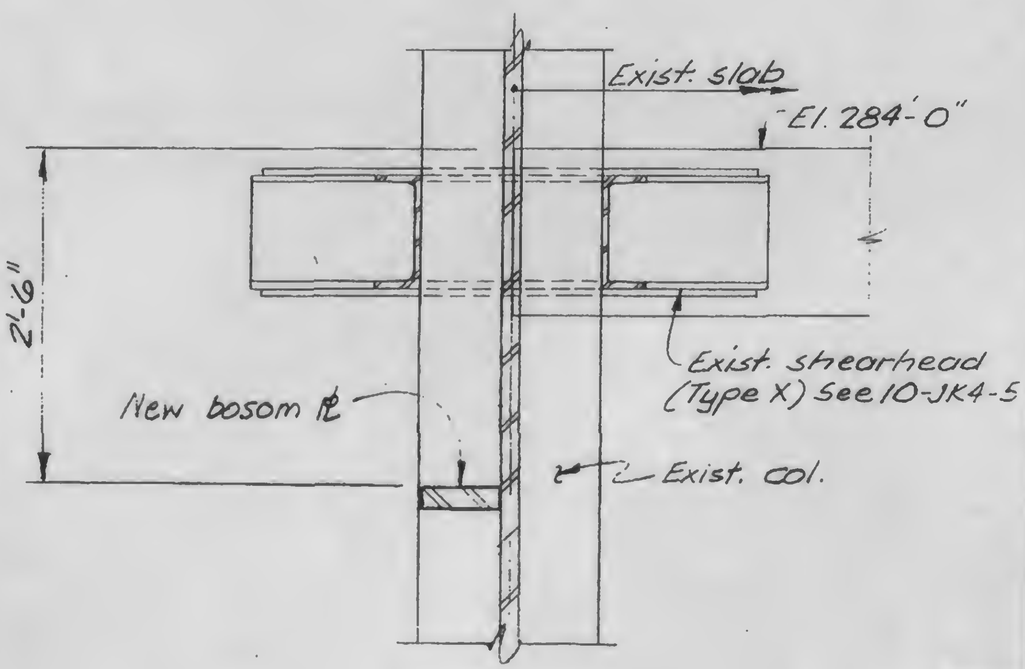

a

b

LICENSED PROFESSIONAL ENGINEER
LESLIE E. ROBERTSON
No. 34360
UNIVERSITY OF THE STATE OF NEW YORK

DESIGNED: DS

DRAWN: TR

REVIEWED:

13-K13-2

SKILLING, HELLE, CHRISTIANSEN, ROBERTSON — Structural & Civil Engineers

PROJECT: THE WORLD TRADE CENTER | TITLE: SECTIONS AT AUTO LIFT - EL. 284'-0" | DATE: 1-12-73

REVISIONS

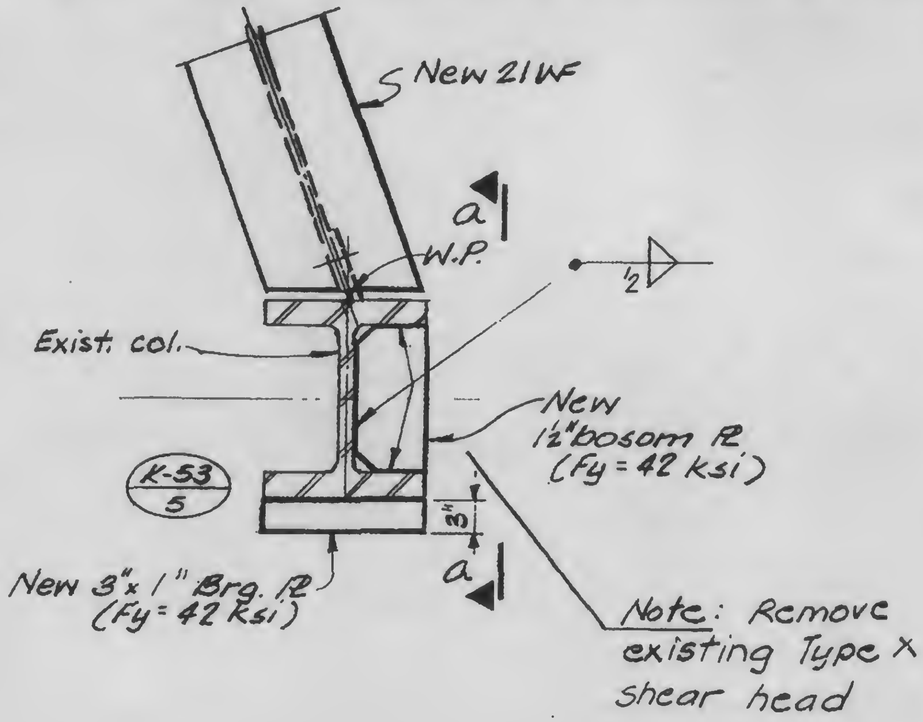

A

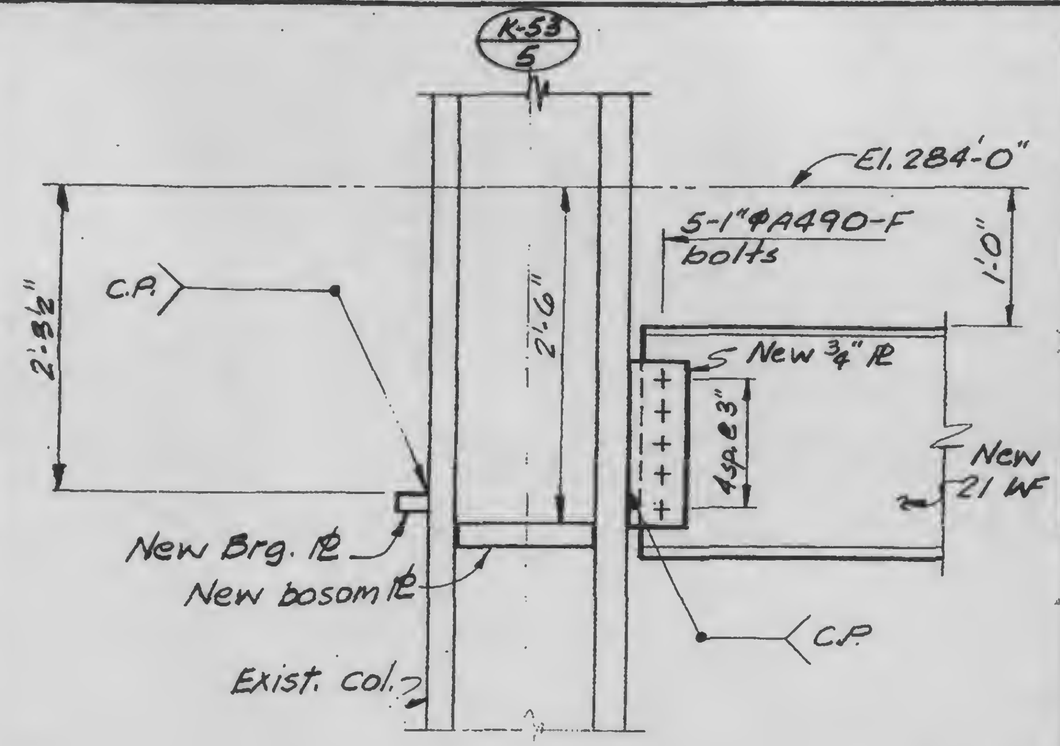

a

LICENSED PROFESSIONAL ENGINEER
LESLIE E. ROBERTSON
No. 34360
UNIVERSITY OF THE STATE OF NEW YORK

DESIGNED D.S.

DRAWN T.R.

REVIEWED

13-K13-3

SKILLING, HELLE, CHRISTIANSEN, ROBERTSON — Consulting Engineers

PROJECT: [illegible] NORLD [illegible] | SECTIONS [illegible] EL. 284'-0" | DATE: [illegible]

REVISIONS

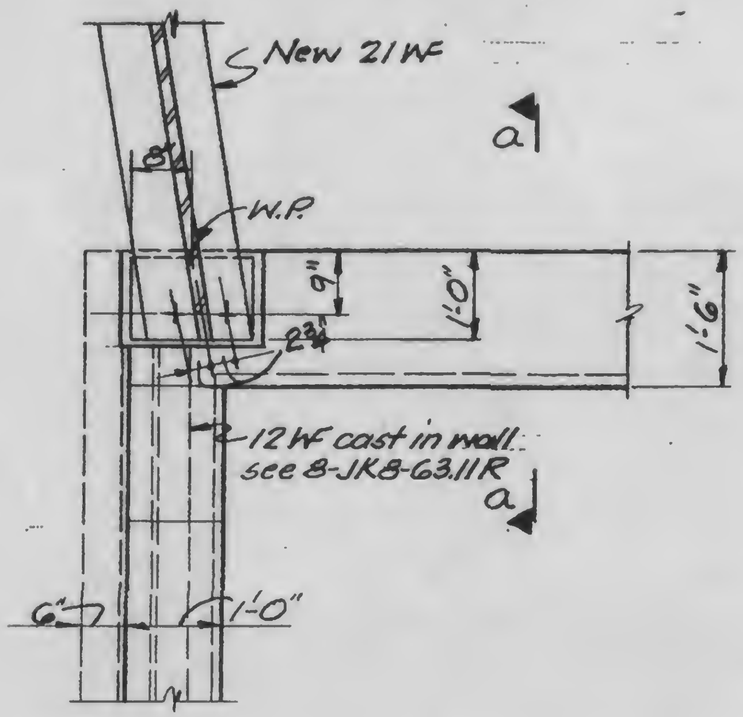

A

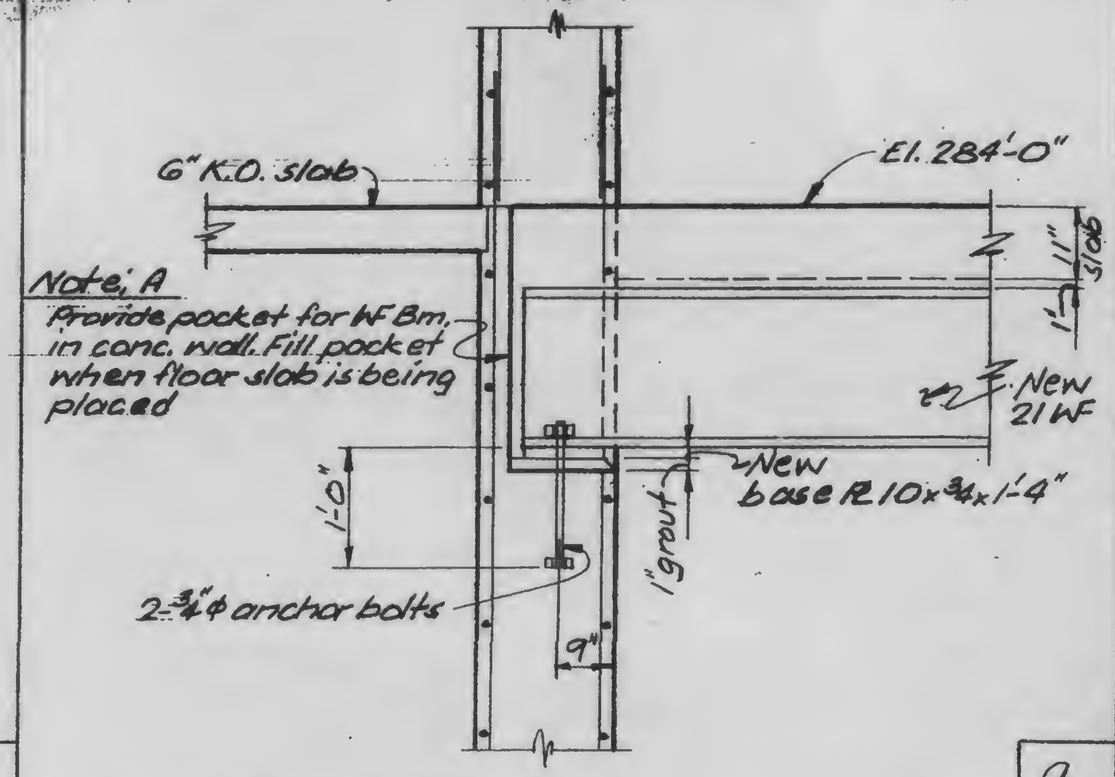

a

LICENSED PROFESSIONAL ENGINEER
LESLIE E. ROBERTSON
No. 34360
UNIVERSITY OF THE STATE OF NEW YORK

SIGNED DS

DRAWN TR

REVIEWED

13-K13-4

REVISIONS
Δ2-1-79
Printed
1-3-79
1-3-79
Issued
Seal
1/7/79

SKILLING, HELLE, CHRISTIANSEN, ROBERTSON
CONSULTING STRUCTURAL AND CIVIL ENGINEERS

PROJECT WTC-1978 HOTEL-SUPPORT REV. | PROJECT NO. 701.283 | BY CWB

DRAWING NO. 13-K19 1.1

DATE 1-3-79

CONTENTS 13-K19

13-K19-1	CONTENTS
13-K19-2	NOTES
13-K19-3	KEY PLANS
13-K19-4	BASE PLATE REINFORCING
13-K19-5	COLUMN REINFORCING
13-K19-6	WEB REINFORCING
13-K19-7	REINFORCING DETAILS LINE 43
13-K19-8	FLANGE REINFORCING
13-K19-9	REINFORCING DETAILS LINE 47
13-K19-10	FLANGE REINFORCING
13-K19-11	REINFORCING DETAILS
13-K19-12	REINFORCING DETAILS
13-K19-13	REINFORCING DETAILS
13-K19-14	HORIZONTAL ANCHOR COL. HS-1
13-K19-15	TRANSFORMER AREA
13-K19-16	EL. 294 REFRIG. MACHINE SUPPORT
13-K19-17	REINFORCING AT NEW OPENINGS EL. 332
13-K19-18	NEW ELEVATOR SUPPORTS EL. 294-310
13-K19-19	HORIZONTAL ANCHOR COL. HP-1
13-K19-20	ELEVATOR BUFFER BEAMS

LICENSED PROFESSIONAL ENGINEER
LESLIE E. ROBERTSON
No. 34360
UNIVERSITY OF THE STATE OF NEW YORK

The Professional Seal and signature affixed hereon is all inclusive for the full content of this document.

REVISIONS 3-20-79

SKILLING, HELLE, CHRISTIANSEN, ROBERTSON
CONSULTING STRUCTURAL AND CIVIL ENGINEERS

DRAWING NO. 13-K19 1.2

PROJECT WTC-1978 HOTEL · SUPPORT REV. | PROJECT NO. 781.283 | BY WAB

DATE PAGE 13-K19

DATE 3/12/79

13-K19-1.1	9/7/79
13-K19-1.2	9/7/79
13-K19-2	2/1/79
13-K19-3.1	3/12/79
13-K19-3.2	3/12/79
13-K19-3.3	3/12/79
13-K19-3.4	2/1/79
13-K19-4	2/1/79
13-K19-5.1	3/12/79
13-K19-5.2	2/1/79
13-K19-5.3	3/12/79
13-K19-5.4	3/12/79
13-K19-5.5	3/12/79
13-K19-6	2/1/79
13-K19-7.1	2/1/79
13-K19-7.2	3/20/79
13-K19-7.3	2/1/79
13-K19-8	2/1/79
13-K19-9.1	3/12/79
13-K19-9.2	2/1/79
13-K19-9.3	2/1/79
13-K19-9.4	2/1/79
13-K19-10	2/1/79
13-K19-11.1	3/20/79
13-K19-11.2	3/20/79
13-K19-12	2/1/79
13-K19-13	3/12/79
13-K19-14	3/12/79
13-K19-15.1	9/7/79
13-K19-15.2	9/7/79
13-K19-15.3	9/7/79
13-K19-15.4	9/7/79
13-K19-15.5	9/7/79
13-K19-15.6	9/7/79
13-K19-15.7	9/7/79
13-K19-15.8	9/7/79
13-K19-16	5/1/79
13-K19-17	3/12/79
13-K19-17 ALT.	4/6/79
13-K19-18.1	4/6/79
13-K19-18.2	4/6/69
13-K19-19	9/7/79
13-K19-20.1	5/31/79
13-K19-20.2	5/31/79
13-K19-20.3	5/31/79
13-K19-20.4	5/31/79
13-K19-20.5	5/31/79

REVISIONS	SKILLING, HELLE, CHRISTIANSEN, ROBERTSON CONSULTING STRUCTURAL AND CIVIL ENGINEERS		DRAWING NO
Δ2-1-79	PROJECT WTC-1978 HOTEL · SUPPORT REV.	PROJECT NO 701.283 / BY WAB	13-K19 2
			DATE 1-3-79

Codes

1. Building Code for the City of New York.
2. AISC "Specification for the Design, Fabrication, and Erection of Structural Steel for Buildings".
3. Structural Welding Code AWS D1.1-Rev. 2-77.
4. ACI 318-77 "American Concrete Institute Standard Building Code Requirements for Reinforced Concrete".

Specifications

See "World Trade Center Hotel - 05120-1-, Structural Steel 6/2/78" except as modified in these Notes and drawings.

Site

1. Dimensions shown in the Drawings are correct to the best of the knowledge of the Port Authority of New York, World Trade Center Planning and Construction hereafter referred to as the Engineer. However, the Contractor shall verify all dimensions by field measurements prior to installing any material. For material fabricated to fit within restricted dimensions, field dimensions shall be verified prior to fabrication and shall be shown in the shop detail drawings.
2. Shop Drawings shall be submitted to the Engineer prior to fabrication of any material.

Structural Steel

1. All steel shall be ASTM A 36 or another weldable steel included in paragraph 1.4.1.1 of the AISC Specifications and selected to provide the yield point required in the drawings.
2. All bolted connections shall be made with bolts as noted in the drawings.
3. Reinforcing is to be provided where field cuts have reduced the shear or moment capacity below the capacity before field cuts were made.
4. Electrodes, flux and shielding gas shall conform to AWS A5.1-69, AWS A5.17-69 or AWS A5.20-69 as applicable and shall provide physical properties after welding equivalent to or better than E7018 low-hydrogen electrodes. Drying or redrying of low hydrogen electrodes shall be performed at a temperature between 700 and 800 degrees Fahrenheit for not less than one hour
5. All welds shall be subject to inspection by the Engineer to the extent deemed necessary by the Engineer. Conformance to AWS D1.1 of all full penetration welds (CP) shall be verified by UT. Partial penetration welds shall be UT where shown in the drawings and as deemed necessary by the Engineer.

Reinforced Concrete

1. Concrete shall be f'c = 4,000 psi made with normal weight aggregate.
2. Concrete which is to be adjacent to existing concrete shall have mixes designed and proportioned to produce minimum practicable shrinkage.
3. Where concrete is to be cast against existing concrete, the existing concrete shall be cleaned and completely coated with an approved epoxy bonding agent prior to casting new concrete.
4. All reinforcing steel shall be deformed bars conforming to ASTM A 615, Grade 60 unless otherwise noted in the Drawings.

REVISIONS
△ 2-1-79
3/4 tied
△ 2-79

SKILLING, HELLE, CHRISTIANSEN, ROBERTSON
CONSULTING STRUCTURAL AND CIVIL ENGINEERS

PROJECT: VTC-1978 HOTEL-SUPPORT REV.
PROJECT NO. 701-283
BY WAB
DRAWING NO. 13-K19 3.1
DATE 1-3-79

KEY PLAN ZONE K-1

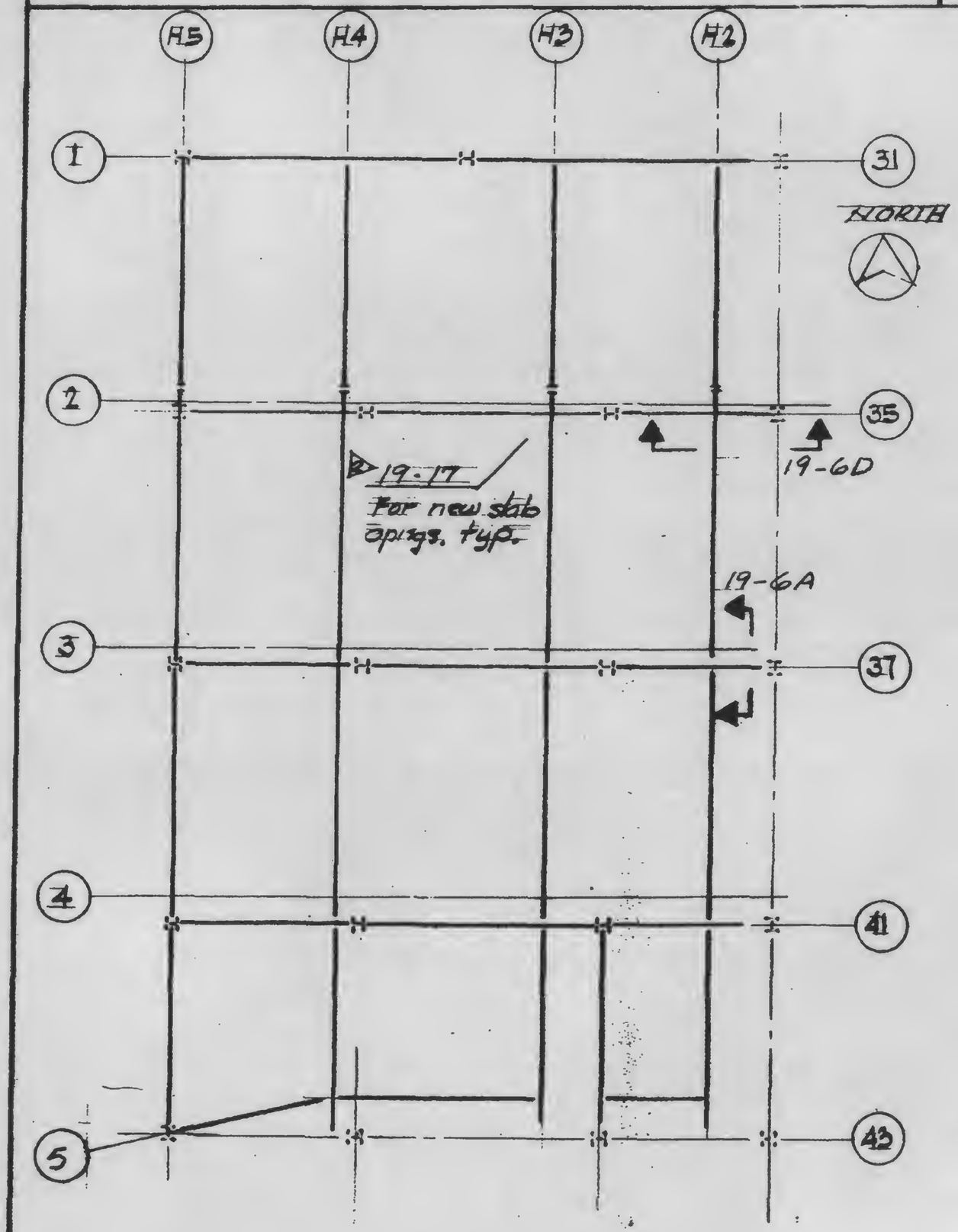

REVISIONS	SKILLING, HELLE, CHRISTIANSEN, ROBERTSON CONSULTING STRUCTURAL AND CIVIL ENGINEERS			DRAWING NO
△1 2-1-79 △2 3-12-79	PROJECT WTC-1978 HOTEL-SUPPORT REV.	PROJECT NO 701-283	BY WAB	13-K19 3.2
	KEY PLAN ZONE K-3			DATE 1-3-79

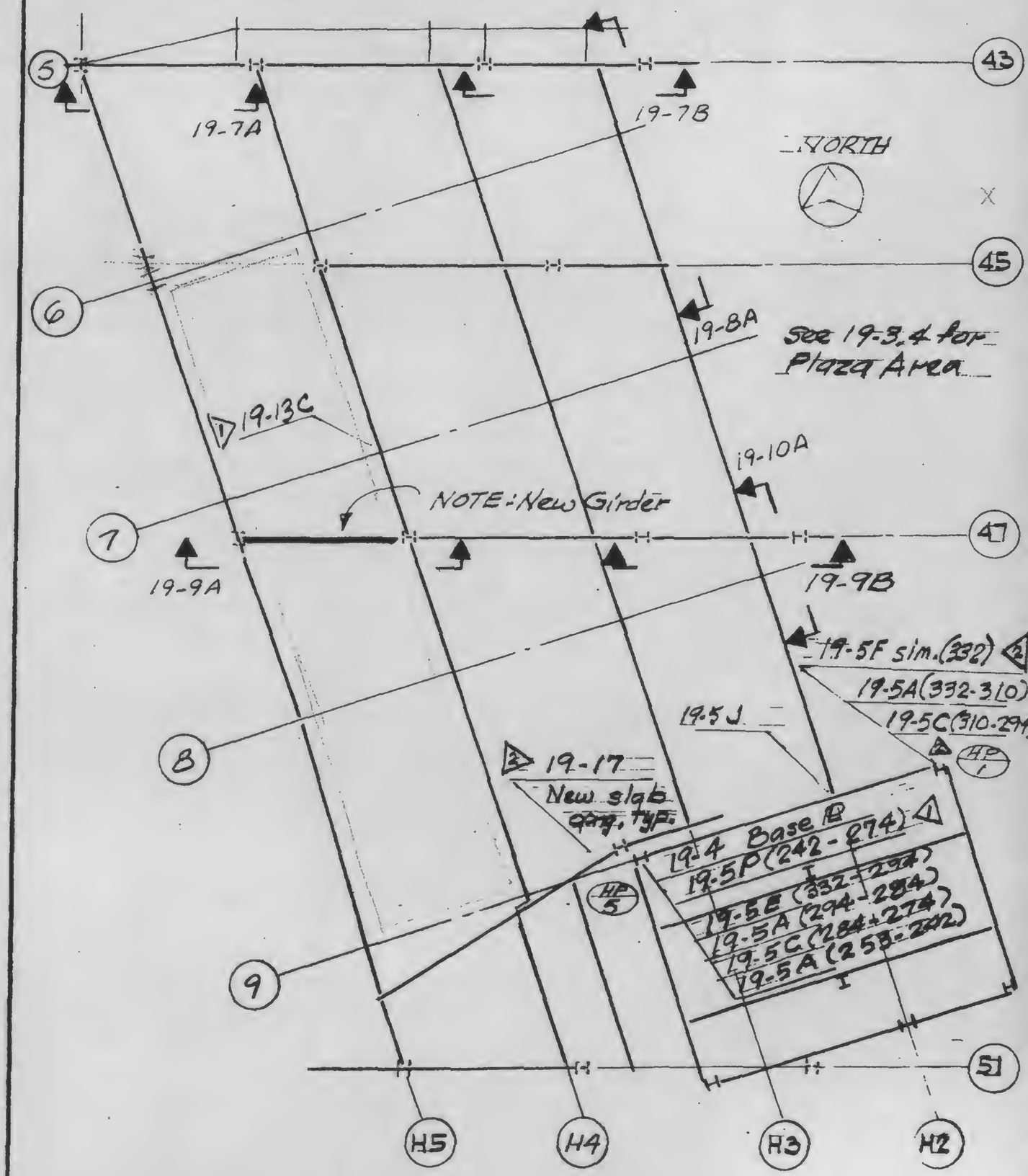

REVISIONS
Δ 2-1-79
Printed
Δ 1-79

SKILLING, HELLE, CHRISTIANSEN, ROBERTSON
CONSULTING STRUCTURAL AND CIVIL ENGINEERS

PROJECT WTC - 1978 HOTEL - SUPPORT REV.
PROJECT NO 701-283
BY CWB

DRAWING NO 13-K19 3.3
DATE 1-3-79

KEY PLAN ZONE K-5

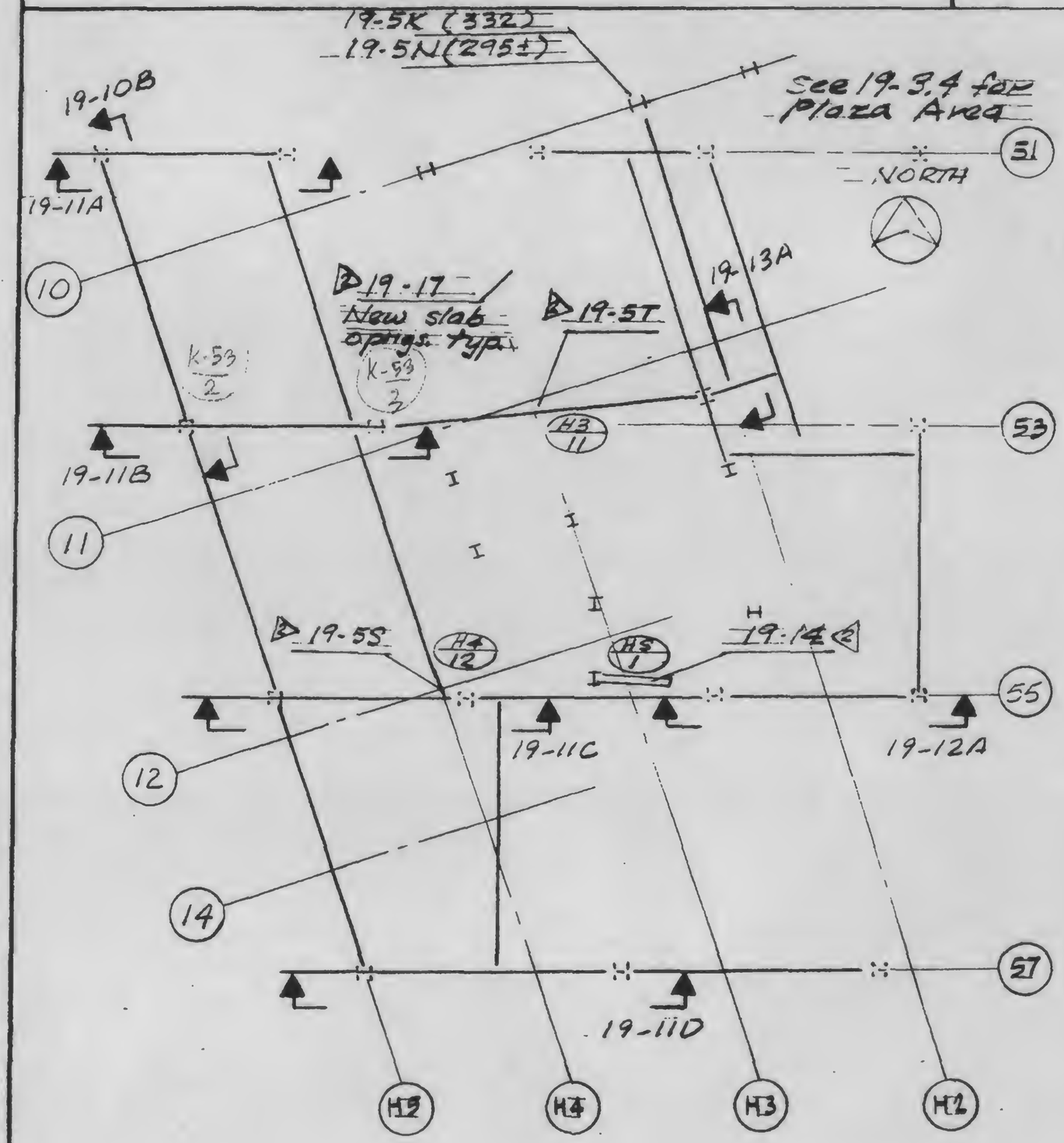

REVISIONS	SKILLING, HELLE, CHRISTIANSEN, ROBERTSON CONSULTING STRUCTURAL AND CIVIL ENGINEERS	DRAWING NO
△2-1-79	PROJECT WTC-1978 HOTEL SUPPORT REV. / PROJECT NO 701.283 / BY WAB	13-K19 3.4
	KEY PLAN PLAZA AREA	DATE 1-3-79

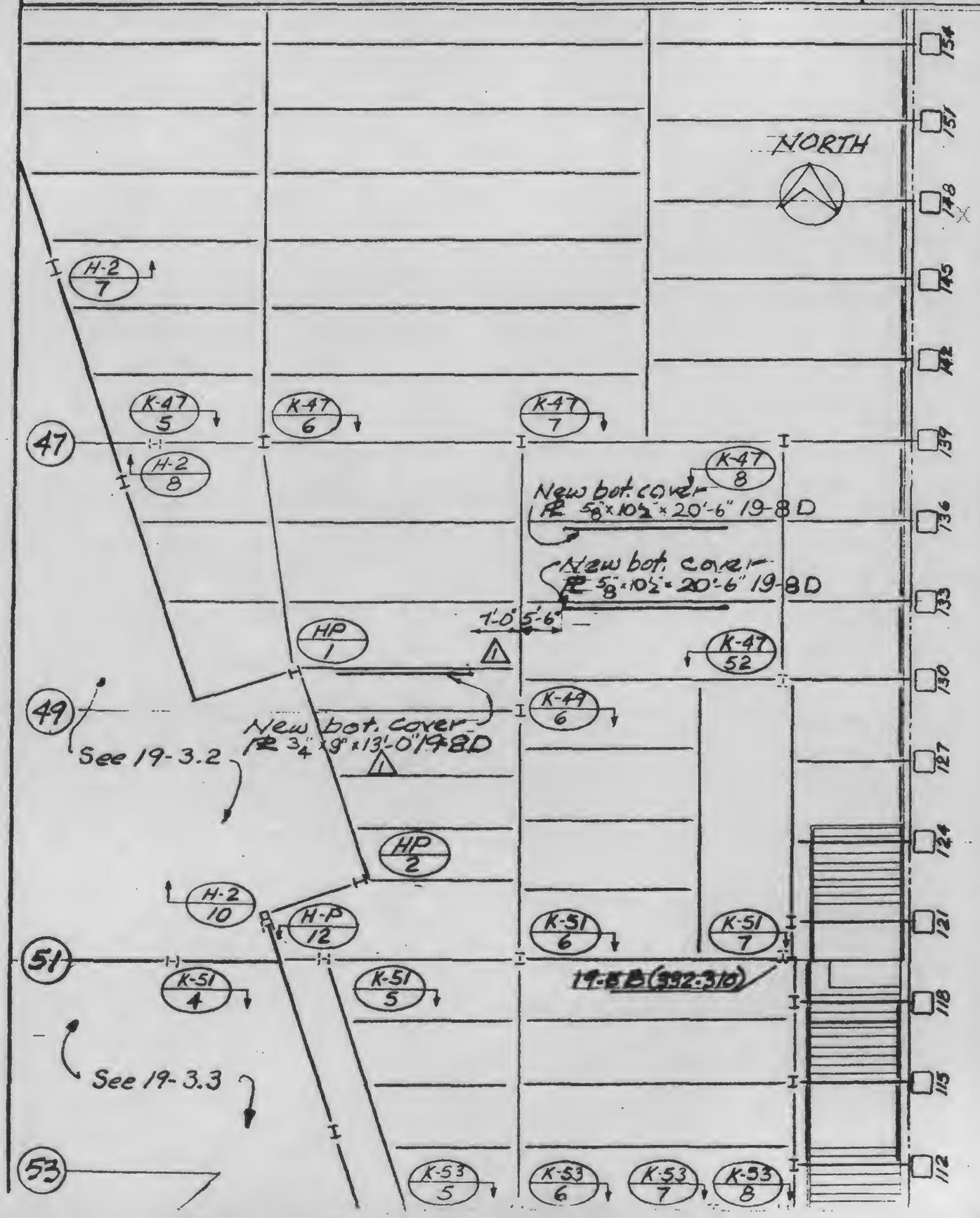

REVISIONS	SKILLING, HELLE, CHRISTIANSEN, ROBERTSON CONSULTING STRUCTURAL AND CIVIL ENGINEERS			DRAWING NO.
△2-1-79	PROJECT WTC-1978 HOTEL-SUPPORT REV.	PROJECT NO. 701.283	BY WAB	13-K19 4
	BASE PL REINFORCING			DATE 1-3-79

Plan Col. HP/5

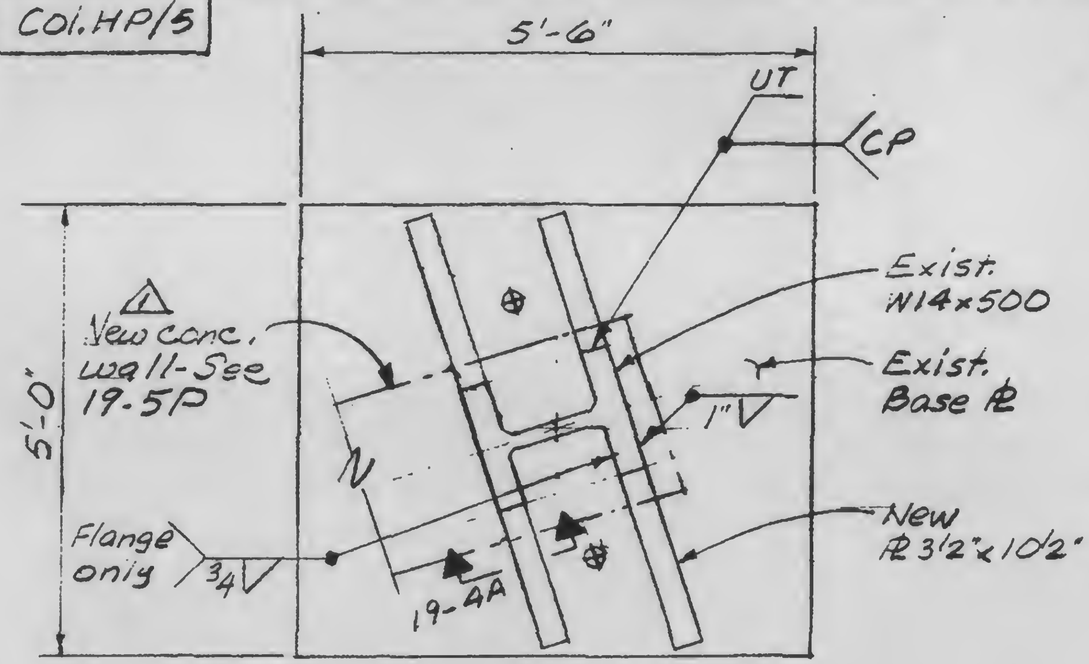

A

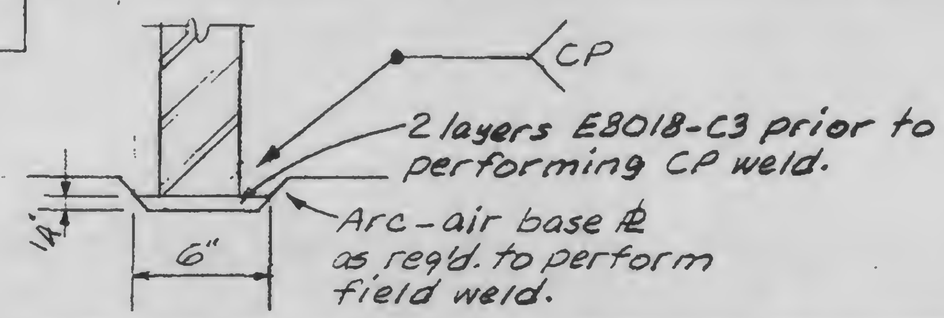

Note: For stiffener to base plate, welding procedure shall include the following:

1. UT Base PL 4 locations 100% before welding.
2. Preheat (soak) 250°F minimum preheat.
3. E7018 manual or E70T-1 semiautomatic welding.
4. Cover heated areas with asbestos blankets and slow cool.
5. UT welds after cooling.

REVISIONS
2-1-79
inted
3 79

SKILLING, HELLE, CHRISTIANSEN, ROBERTSON
CONSULTING STRUCTURAL AND CIVIL ENGINEERS

PROJECT NTC-1978 HOTEL-SUPPORT REV. | PROJECT NO. 701.283 | BY WAB | DRAWING NO. 13-K19 5.1

COLUMN REINFORCING

DATE 1-3-79

A

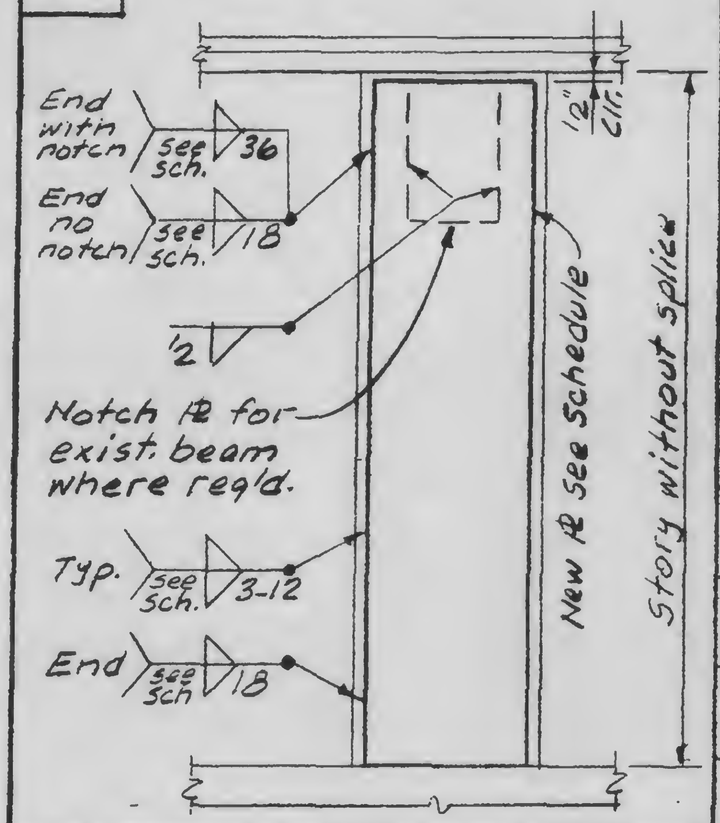

SCHEDULE

Level \ Col. No	HP 5	HP 1	K51 7
332 to 310	See 19-5E	PL 1/2 x 14 1/2 (5/16) 19-5A	PL 3/4 x 12 (5/16) 19-5B
310 to 294	See 19-5E	PL 1/2 x 14 1/2 (5/16) 19-5C	X
294 to 284	PL 1 x 18 (3/8) 19-5A		
284 to 274	PL 1 x 18 (3/8) 19-5C		
274 to 264			
264 to 253			
253 to 242	PL 1 x 18 (3/8) 19-5A		

B

C

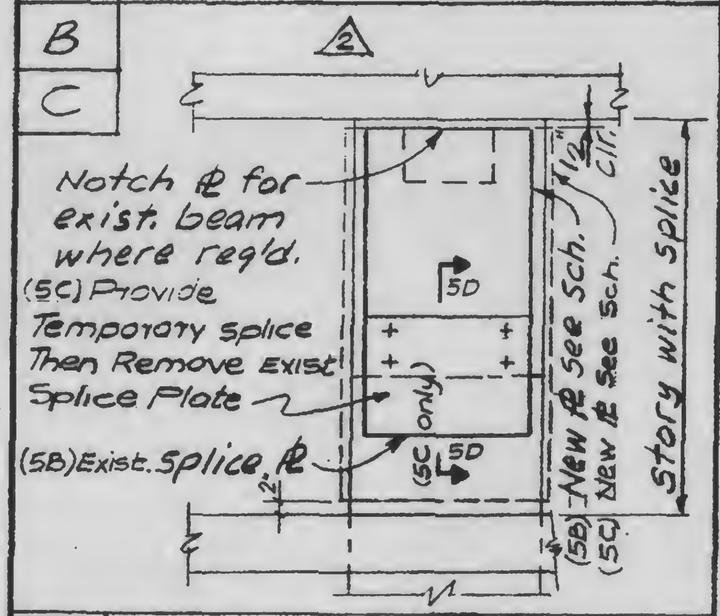

D

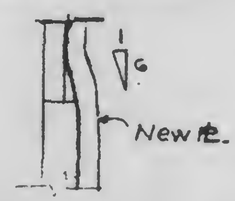

TYPICAL COLUMN SECTION

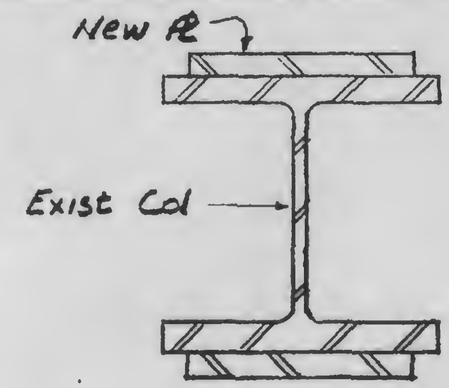

Notes:

1. All new cover plates to be Fy = 36 except 5/4 Fy = 50 Ksi
2. Field measurement is required to establish the length of all new cover plates.

HELLE CHRISTIANSEN ROBERTSON Structural & Civil Engineers	PROJECT WIC-MOTOL	DATE 10/16/79	Sheet No.
	ALT. COL 51/7	PREPARED BY [illegible]	13-K19 5.1 B
		APPROVED	

See Sch. 13-K19-5.1 for welding

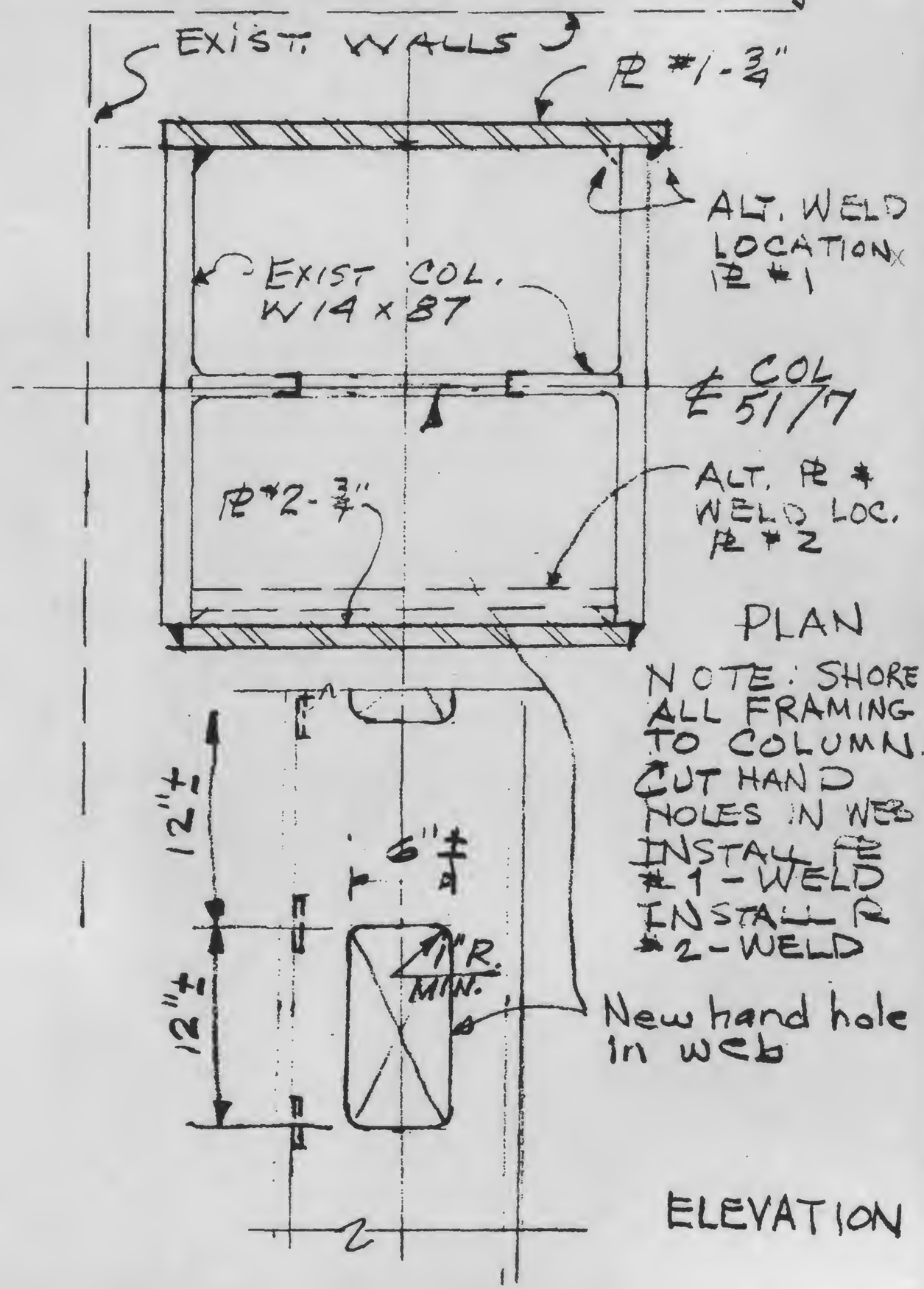

REVISIONS
△ 2-1-79

SKILLING, HELLE, CHRISTIANSEN, ROBERTSON
CONSULTING STRUCTURAL AND CIVIL ENGINEERS

PROJECT: WTC-1978 HOTEL - SUPPORT REV.
PROJECT NO: 701.283
BY: J.C.
DRAWING NO: 13-K.19 5.2
DATE: 1-3-79

COLUMN REINFORCING

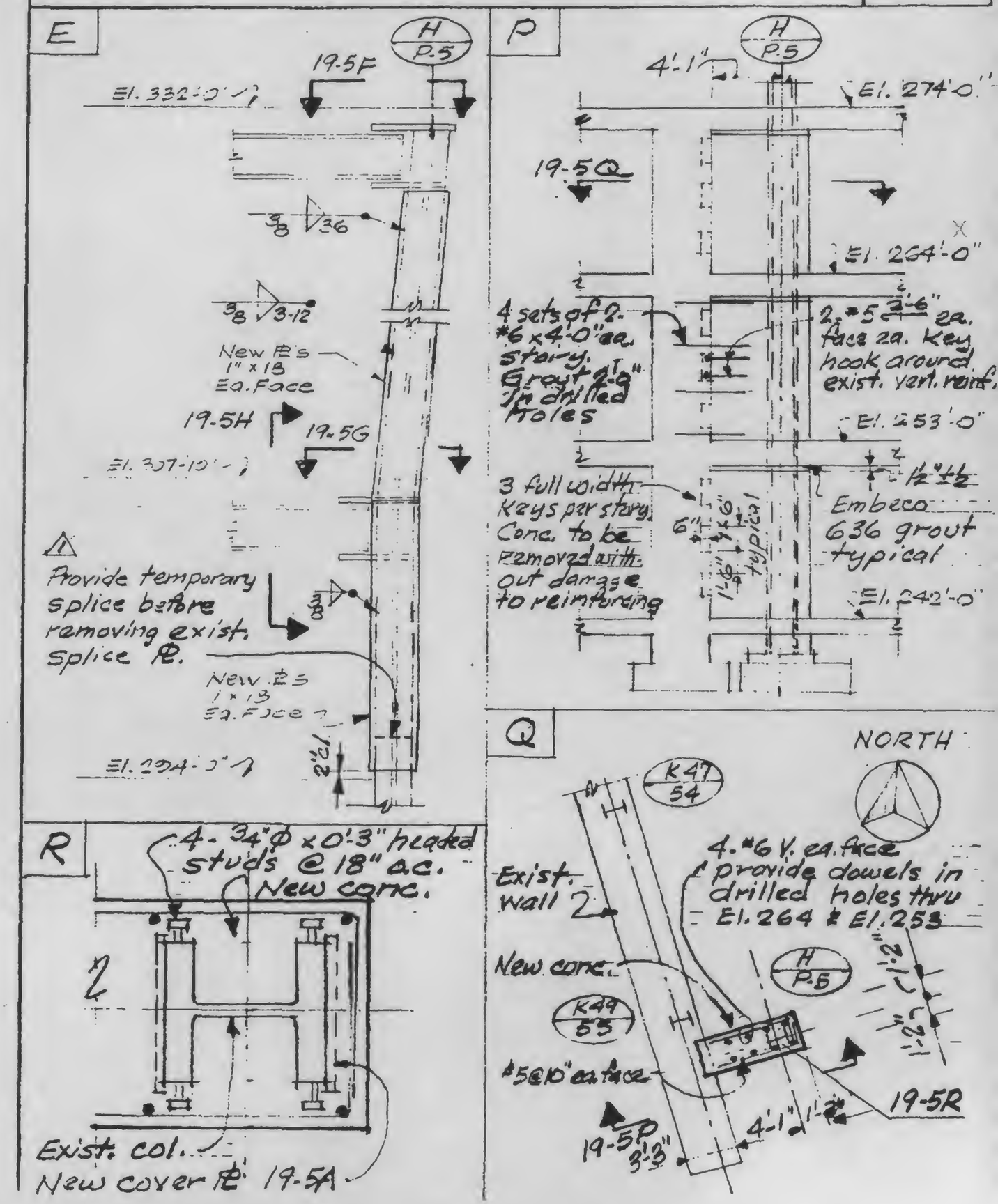

REVISIONS
△ 2-1-79
△ 3-12-79

SKILLING, HELLE, CHRISTIANSEN, ROBERTSON
CONSULTING STRUCTURAL AND CIVIL ENGINEERS

PROJECT WTC-1973 HOTEL-SUPPORT REV. | PROJECT NO. 701.233 | BY WAB | DRAWING NO. 13-K-1 5.3

COLUMN REINFORCING

DATE 1-3-79

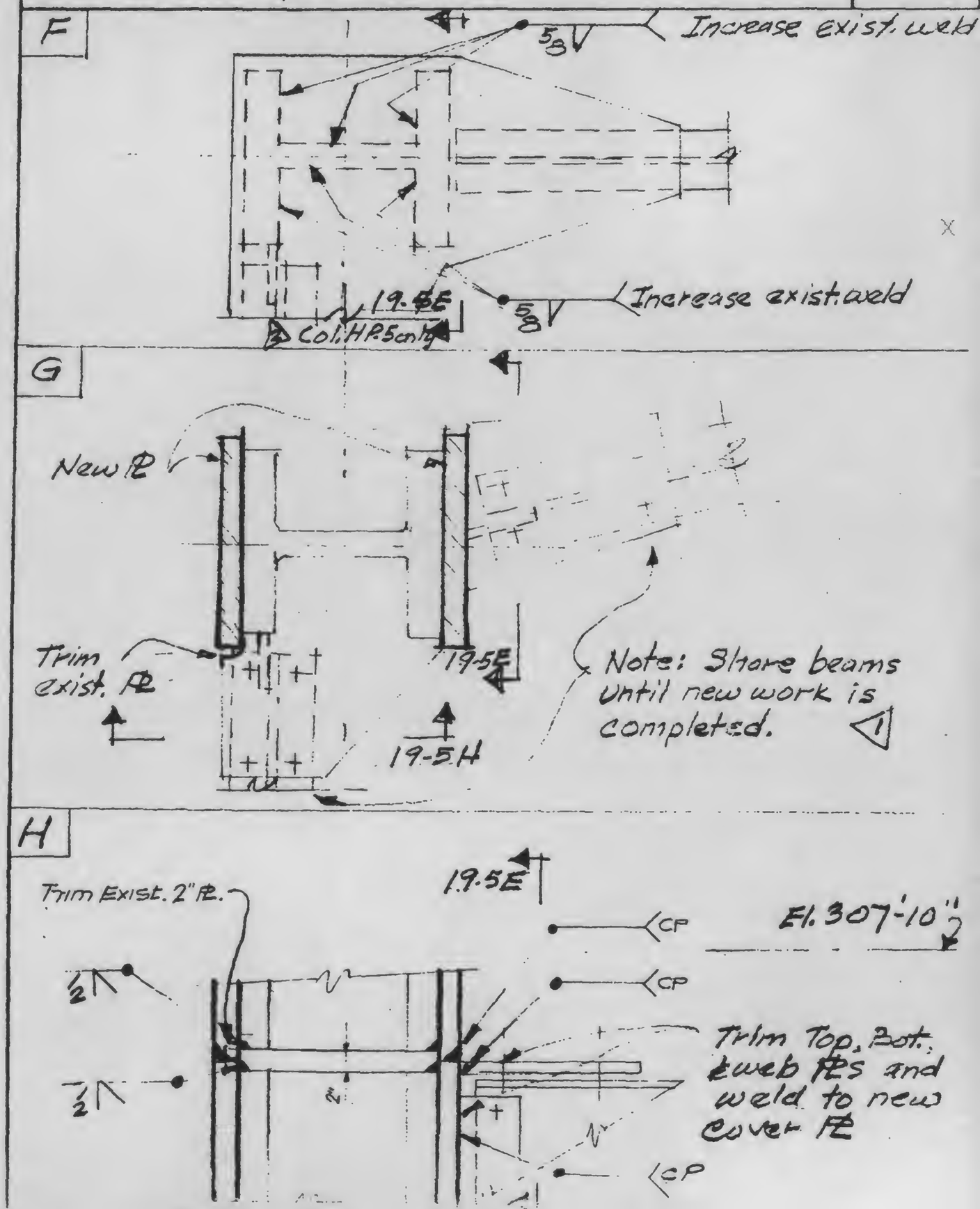

REVISIONS
△2-1-79
Printed
△2-9-79

SKILLING, HELLE, CHRISTIANSEN, ROBERTSON
CONSULTING STRUCTURAL AND CIVIL ENGINEERS

DRAWING NO 13-K.3 5.4

PROJECT WTC-1978 HOTEL-SUPPORT REV | PROJECT NO 701.283 | BY Q.15

DATE 1-3-79

COLUMN REINFORCING

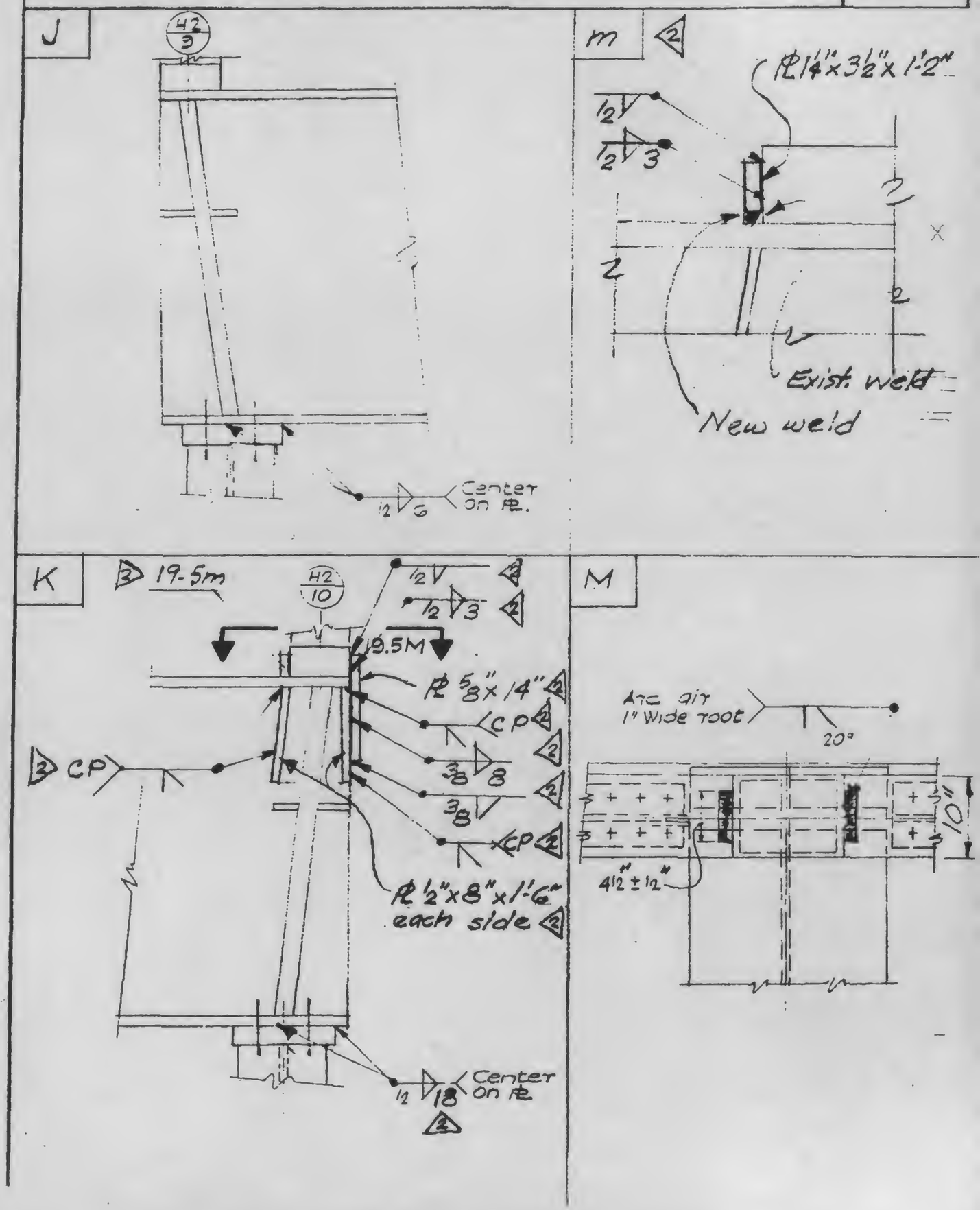

REVISIONS
△2-1-79
Printed
:79

SKILLING, HELLE, CHRISTIANSEN, ROBERTSON
CONSULTING STRUCTURAL AND CIVIL ENGINEERS

PROJECT WTC-1973 HOTEL- SUPPORT REV. | PROJECT NO 701,233 | BY WTB

DRAWING NO 13-K.19 5.5

DATE 1-3-79

COLUMN REINFORCING

N

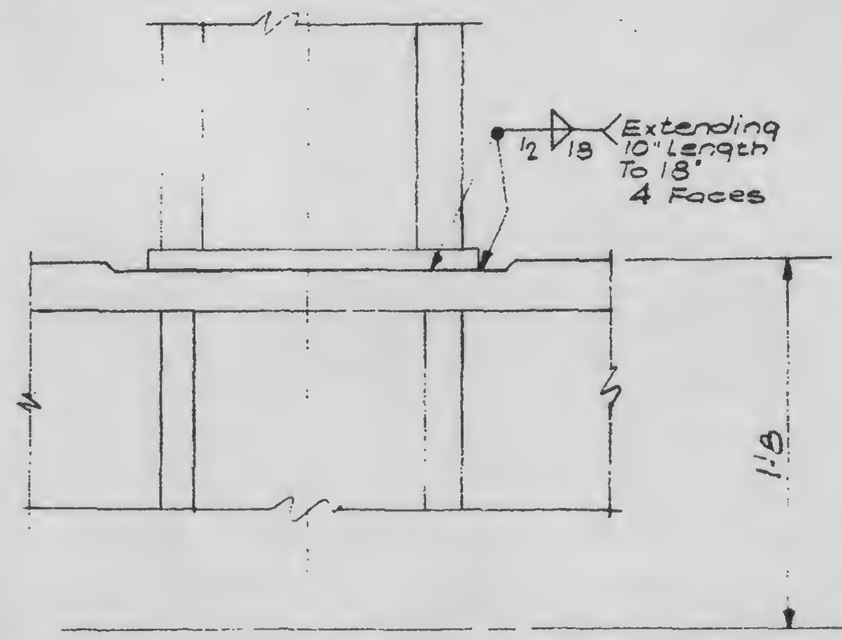

S

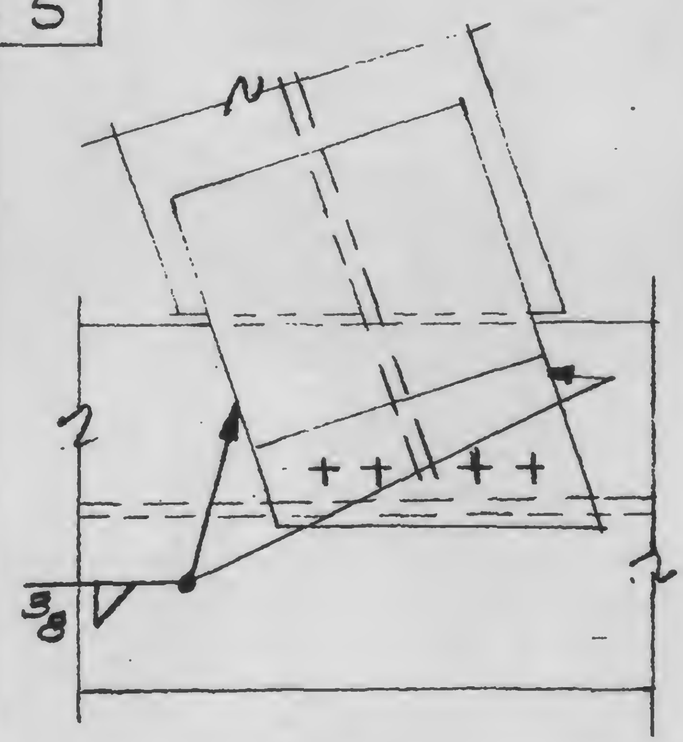

T

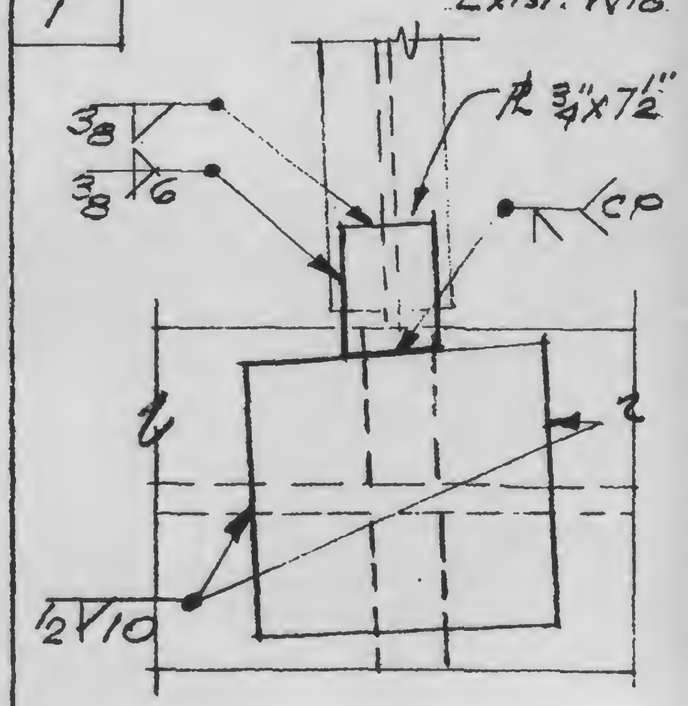

REVISIONS
△2-1-79

SKILLING, HELLE, CHRISTIANSEN, ROBERTSON
CONSULTING STRUCTURAL AND CIVIL ENGINEERS

DRAWING NO. 13-K19 6

PROJECT NTC-1978 HOTEL-SUPPORT REV. | PROJECT NO. 701.283 | BY CAB

DATE 1-3-79

WEB REINFORCING

A Ref. 13-K3.1-1B

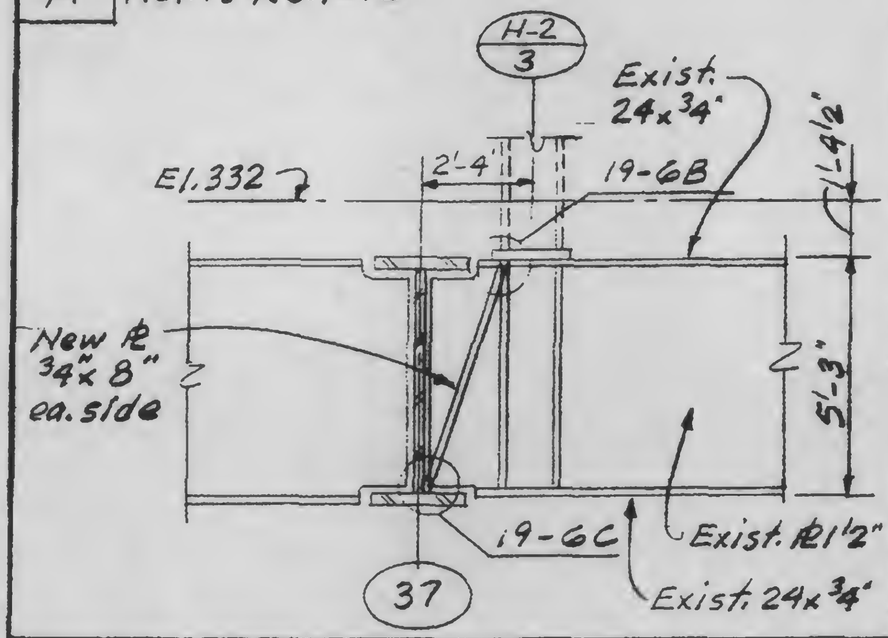

B

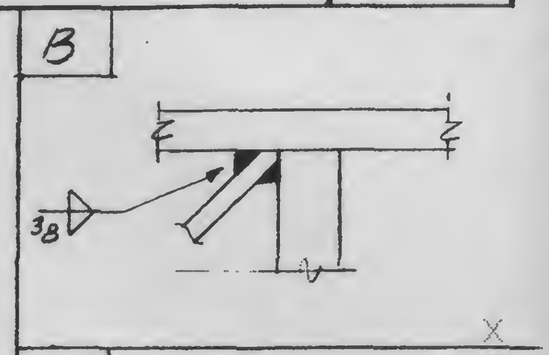

C

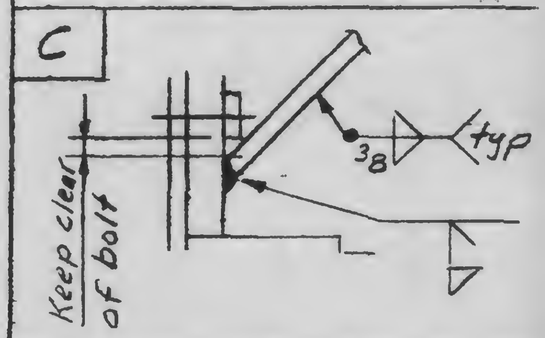

D Ref. 13-K2.1-2

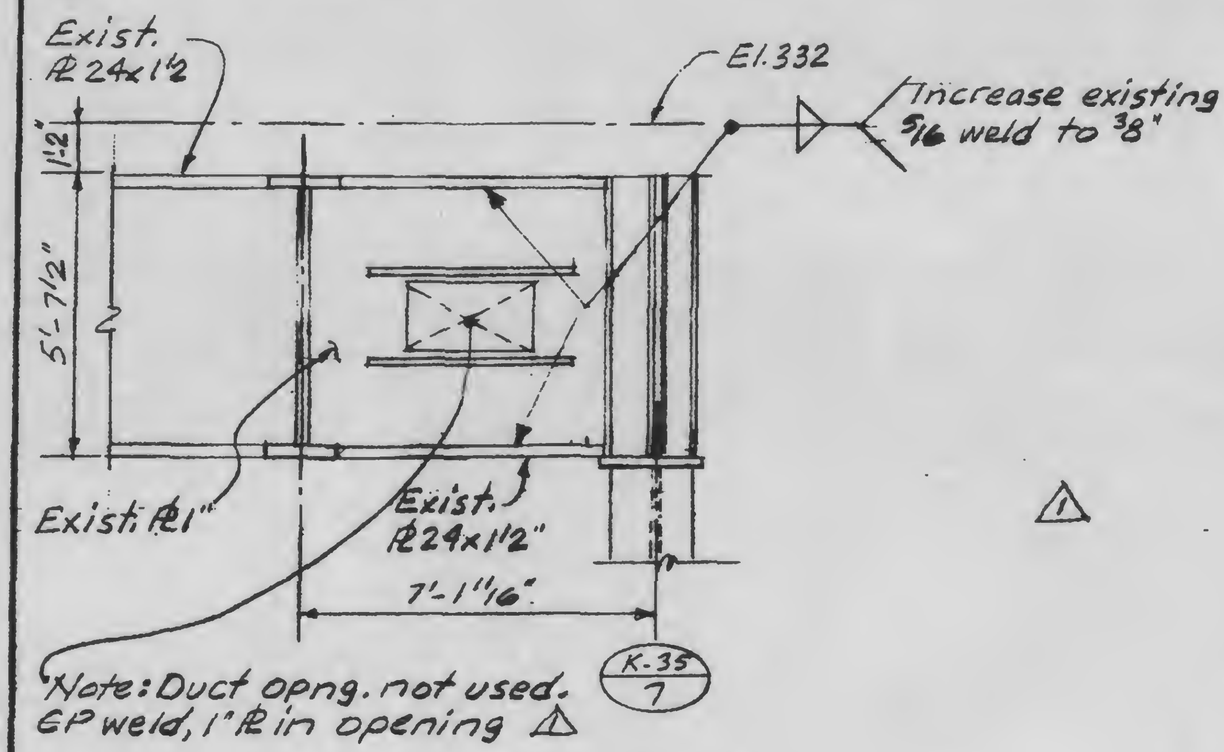

△1

REVISIONS	SKILLING, HELLE, CHRISTIANSEN, ROBERTSON CONSULTING STRUCTURAL AND CIVIL ENGINEERS		DRAWING NO
△2-1-79	PROJECT WTC-1978 HOTEL-SUPPORT REV.	PROJECT NO 701.283 / BY WAB	13-K19 7.1
	REINFORCING DETAILS – LINE 43		DATE 1-3-79

A Ref. 13-K2.1-5

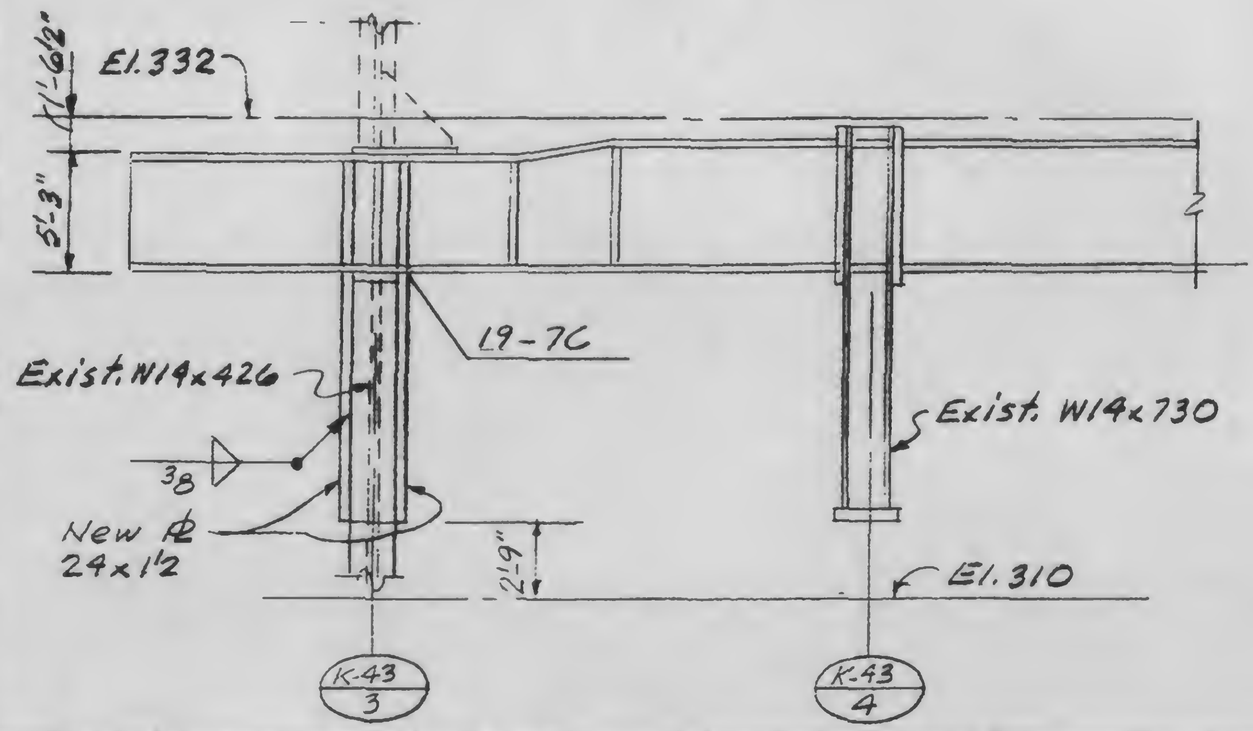

B Ref. 13-K2.1-5

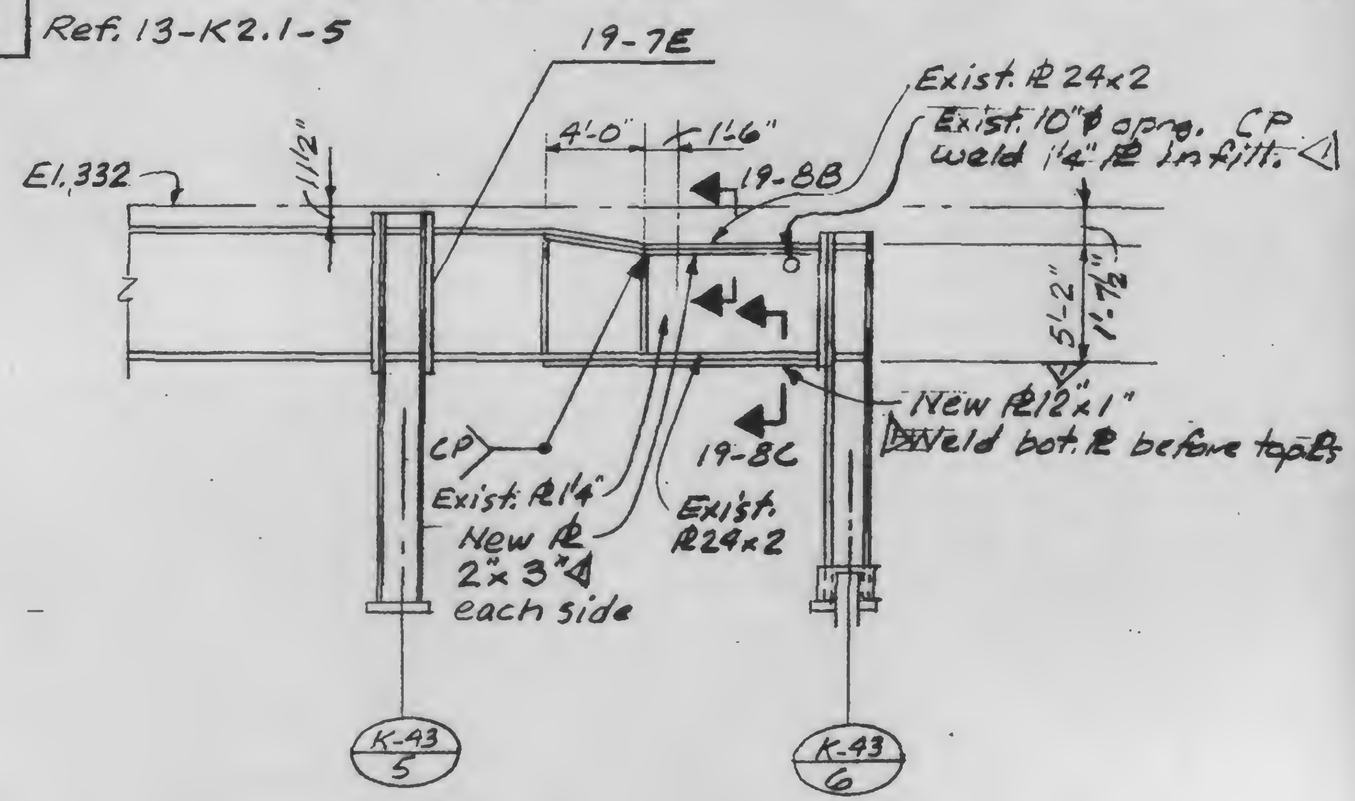

REVISIONS	SKILLING, HELLE, CHRISTIANSEN, ROBERTSON CONSULTING STRUCTURAL AND CIVIL ENGINEERS			DRAWING NO
2-1-79	PROJECT NTC-1978 HOTEL-SUPPORT REV.	PROJECT NO 701.283	BY WAB	13-K19 7.2
3-20-79	REINFORCING DETAILS – LINE 43			DATE 1-3-79

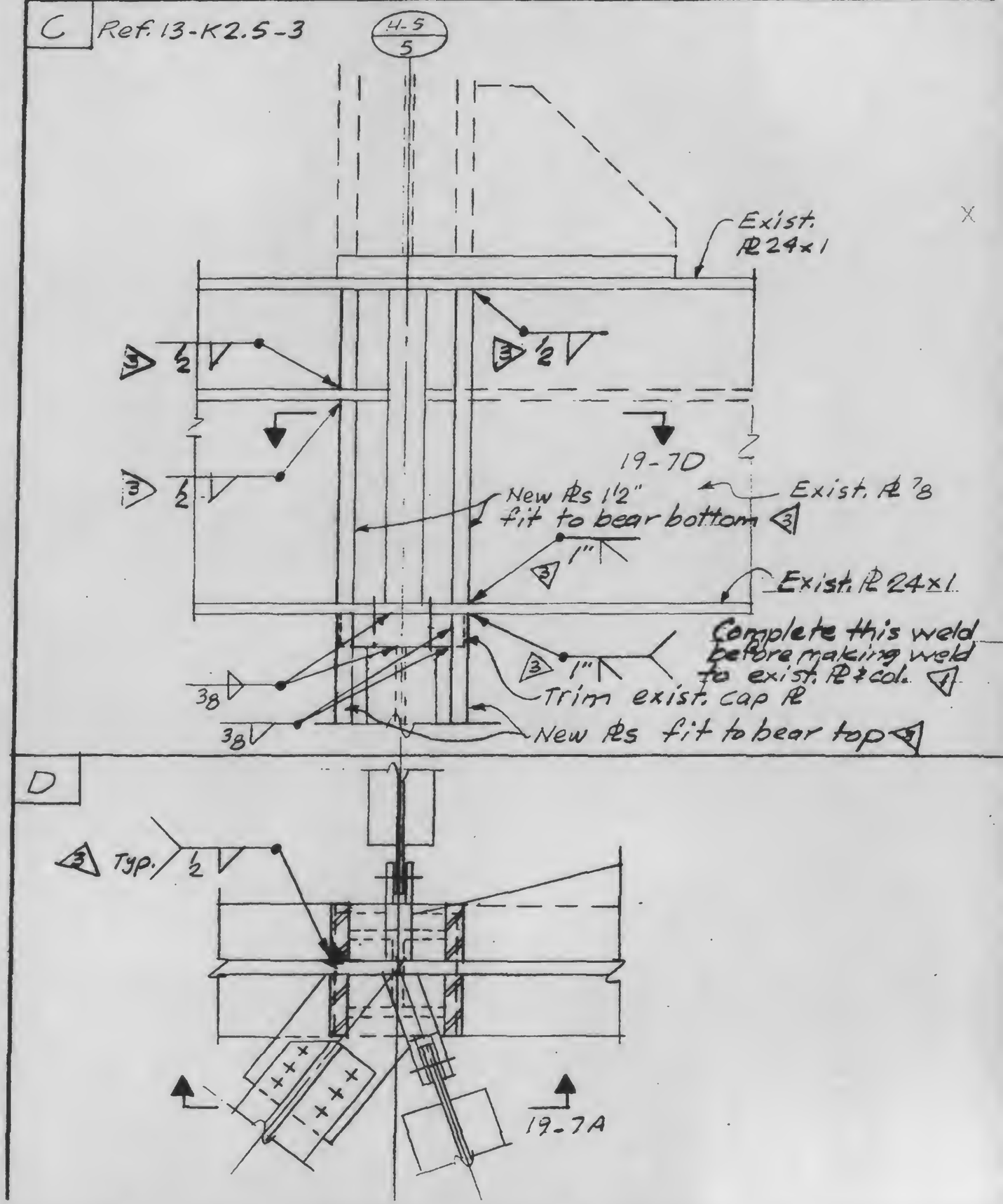

REVISIONS	SKILLING, HELLE, CHRISTIANSEN, ROBERTSON CONSULTING STRUCTURAL AND CIVIL ENGINEERS			DRAWING NO
12-1-79	PROJECT NTC-1978 HOTEL-SUPPORT REV.	PROJECT NO 701.283	BY WAC	13-K19 7.3
	REINFORCING DETAIL - LINE 43			DATE 7-3-79

E Ref. 13-K2.4-5B

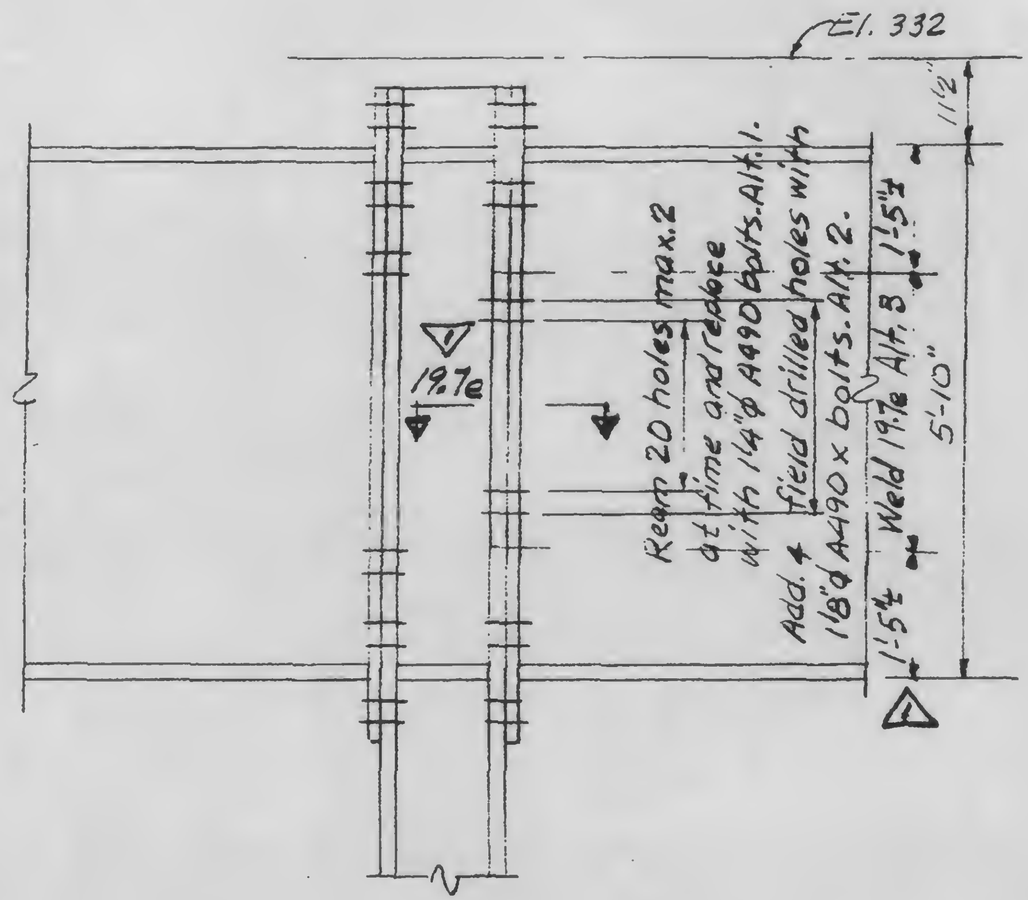

e 1

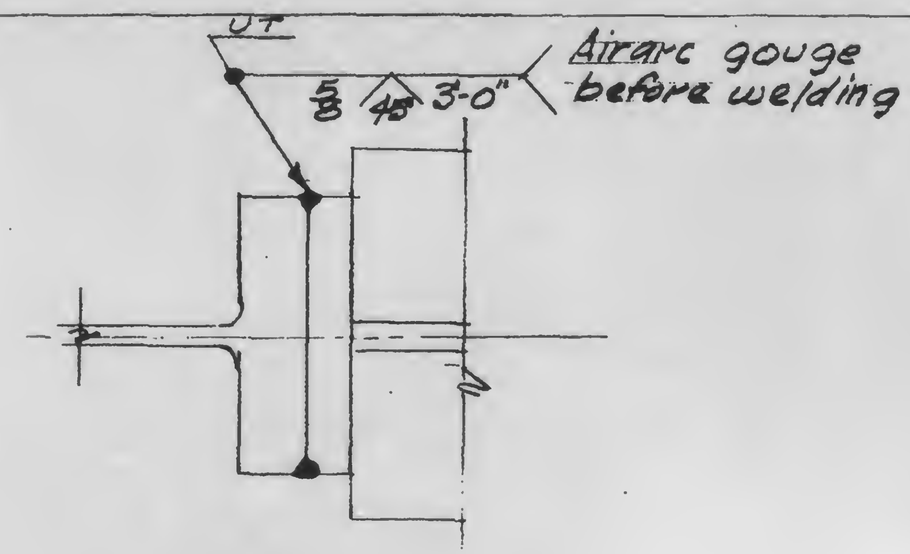

REVISIONS	SKILLING, HELLE, CHRISTIANSEN, ROBERTSON CONSULTING STRUCTURAL AND CIVIL ENGINEERS	DRAWING NO
△2-1-79	PROJECT WTC-1978 HOTEL-SUPPORT REV · PROJECT NO. 701.283 · BY WJB	13-K19 8
	FLANGE REINFORCING	DATE 1-3-79

A Ref. 13-K3.1-4C

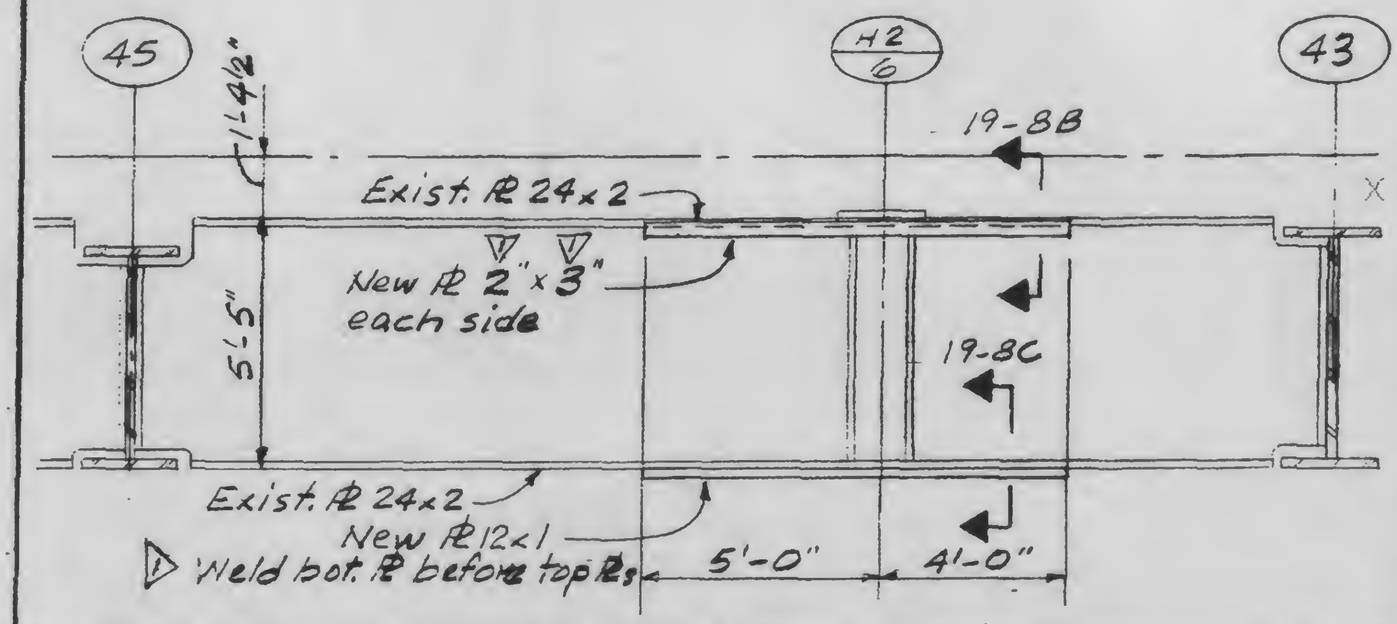

B

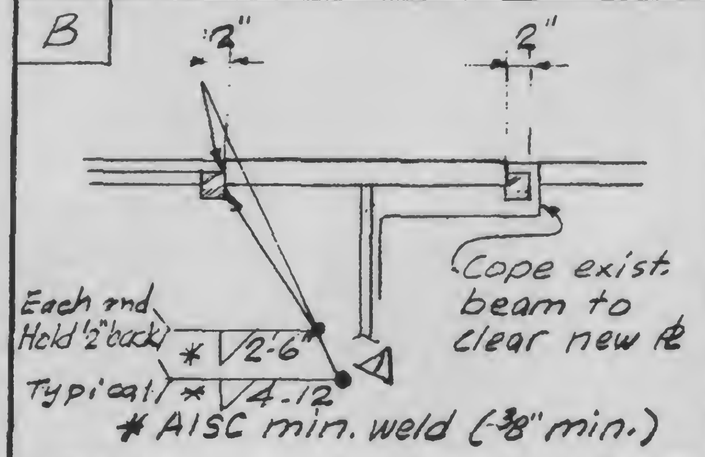

C

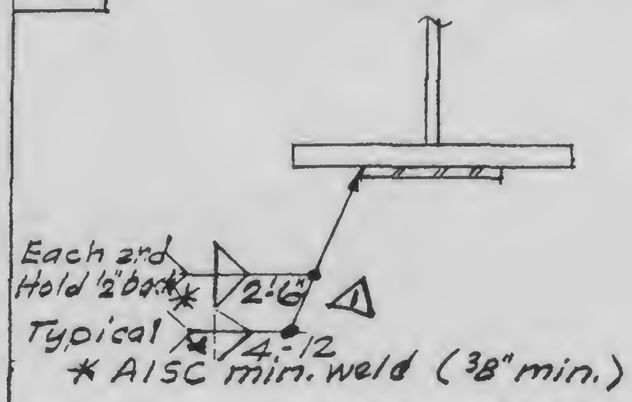

D

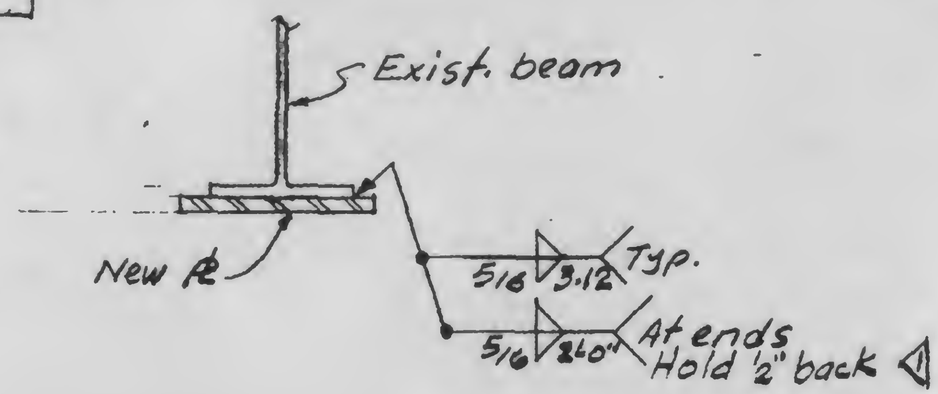

REVISIONS
1 2-1-79
2 3-12-79

SKILLING, HELLE, CHRISTIANSEN, ROBERTSON
CONSULTING STRUCTURAL AND CIVIL ENGINEERS

DRAWING NO 13-K19 9.1

PROJECT NTC-1978 HOTEL-SUPPORT REV. | PROJECT NO 701-283 | BY WAB

DATE 1-3-79

REINFORCING DETAILS - LINE 47

A

Ref. 13-K2.1-7 60-3/4"Φ x 0'-4 1/2" headed shear studs in 2 rows. 2

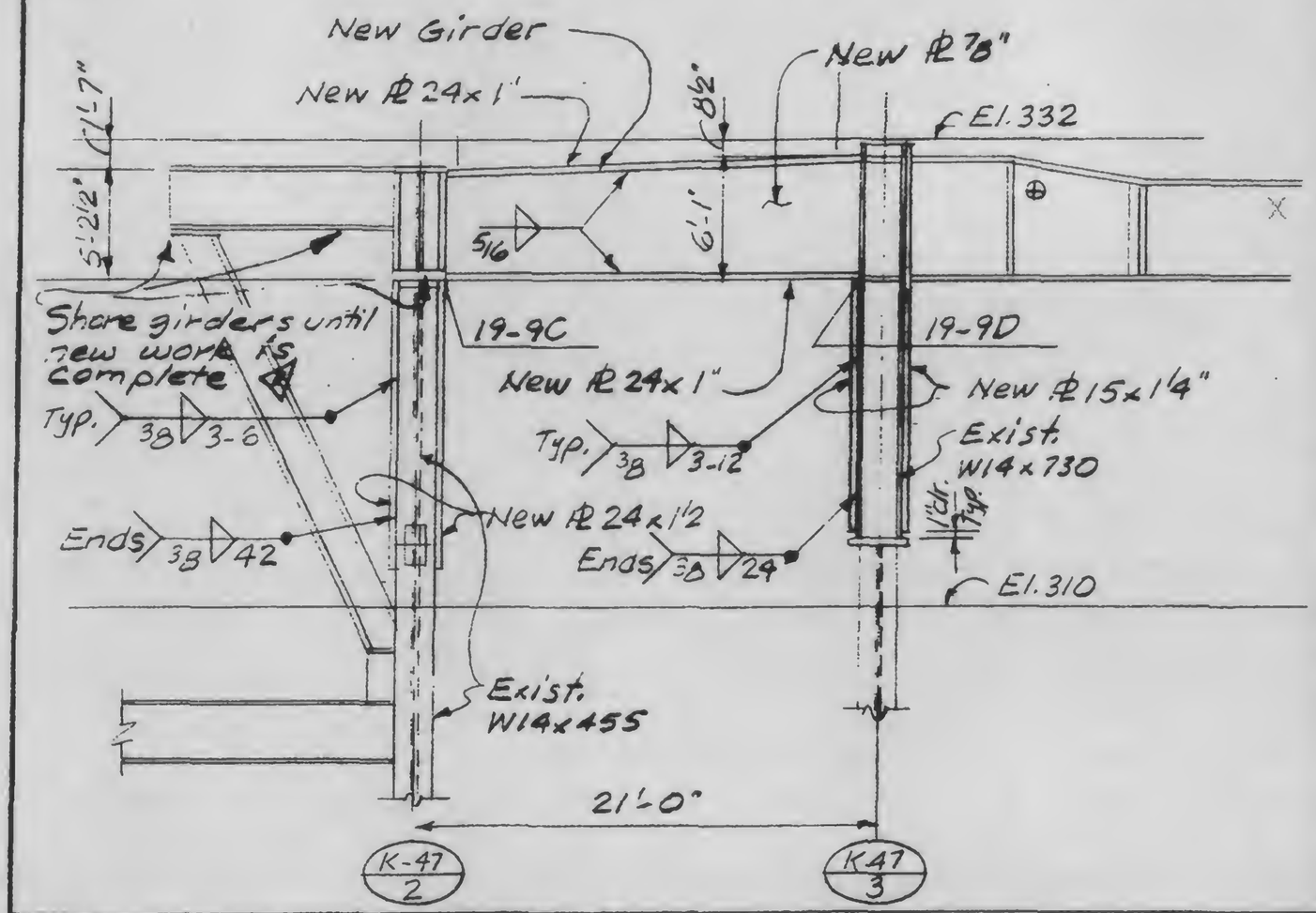

B

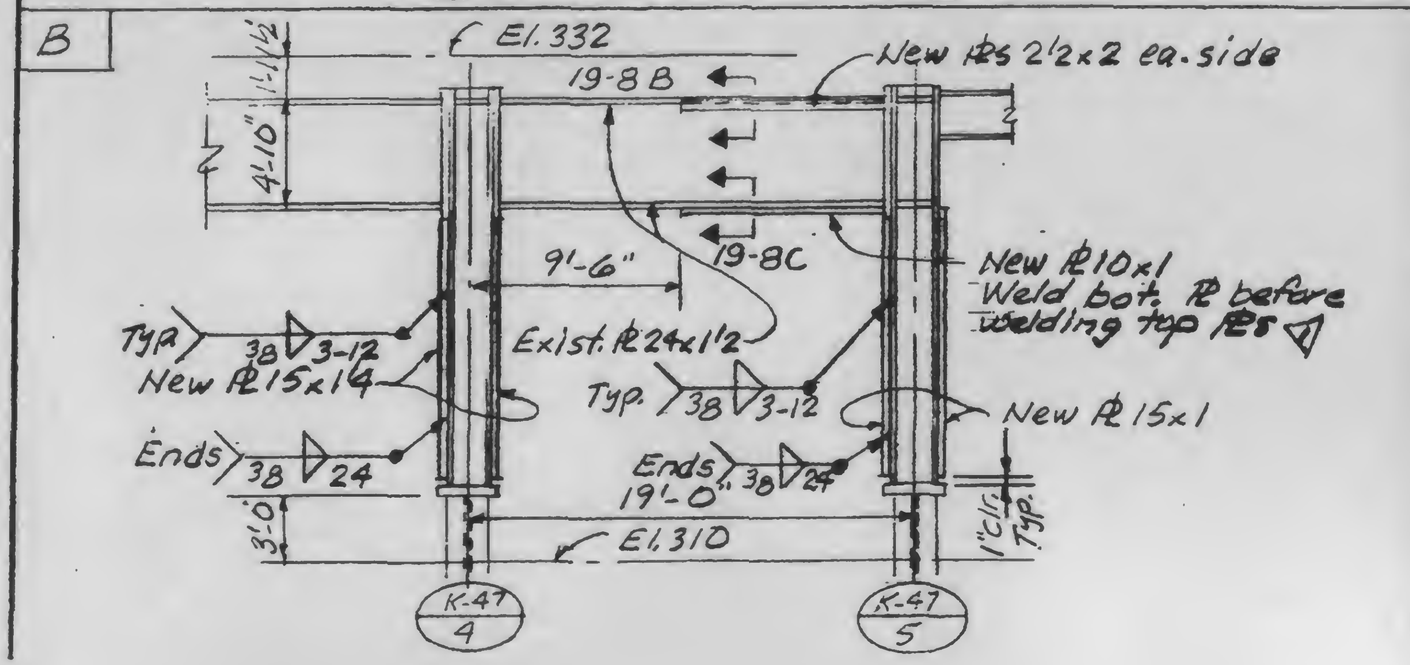

REVISIONS	SKILLING, HELLE, CHRISTIANSEN, ROBERTSON CONSULTING STRUCTURAL AND CIVIL ENGINEERS		DRAWING NO.
△ 2-1-79	PROJECT WTC-1978 HOTEL-SUPPORT REV.	PROJECT NO. 701.283 / BY WAB	13-K19 9.2
	REINFORCING DETAILS - LINE 47		DATE 7-3-79

C Ref. 13-K3.3-8B

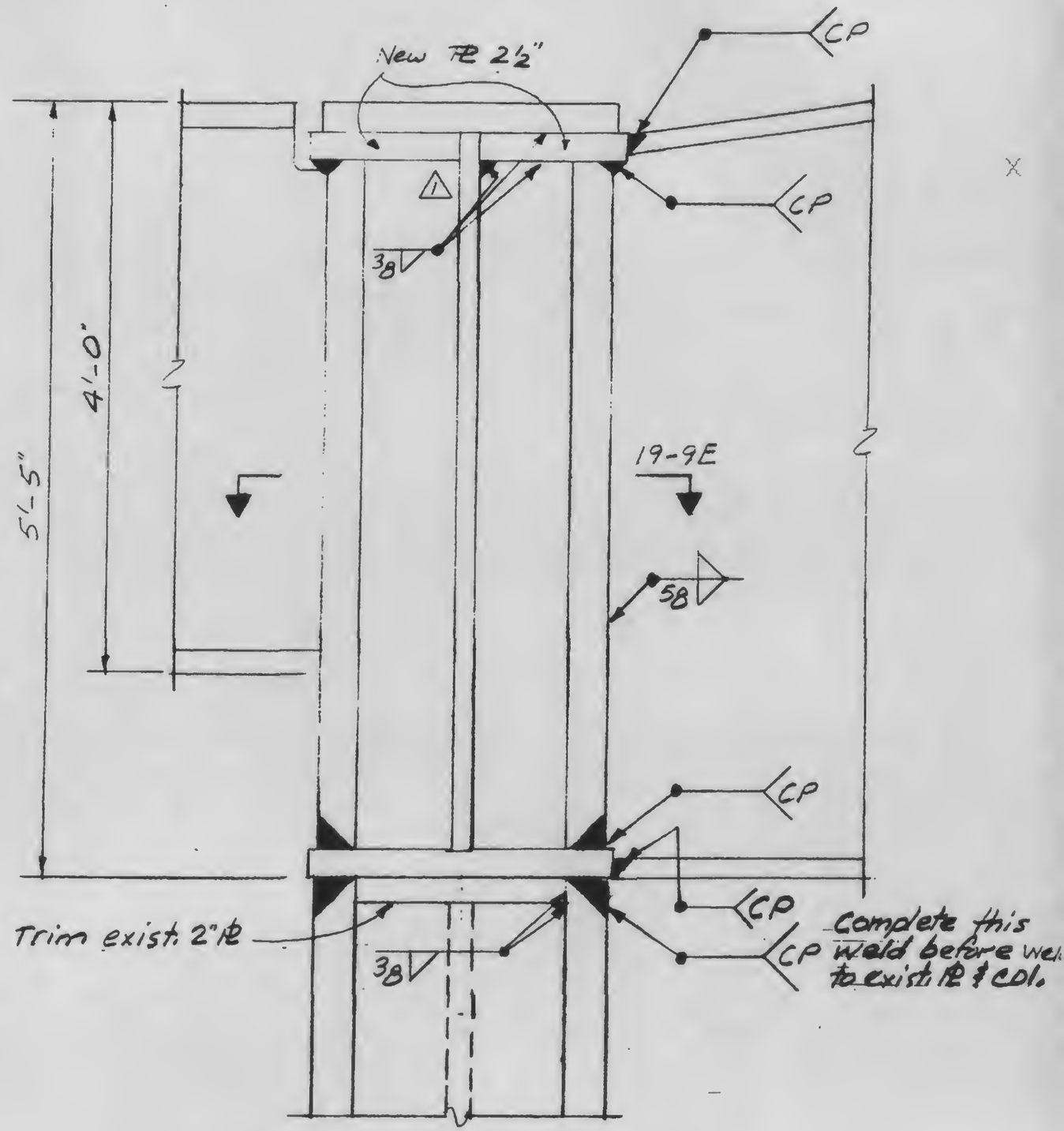

REVISIONS
2-1-79
1
ted

SKILLING, HELLE, CHRISTIANSEN, ROBERTSON
CONSULTING STRUCTURAL AND CIVIL ENGINEERS

DRAWING NO. 3-K19 9.3

PROJECT NTC-1978 HOTEL-SUPPORT REV. | PROJECT NO. 701.283 | BY WAB

DATE 1-3-79

REINFORCING DETAILS - LINE 47

D Ref. 13-K2.4-8A

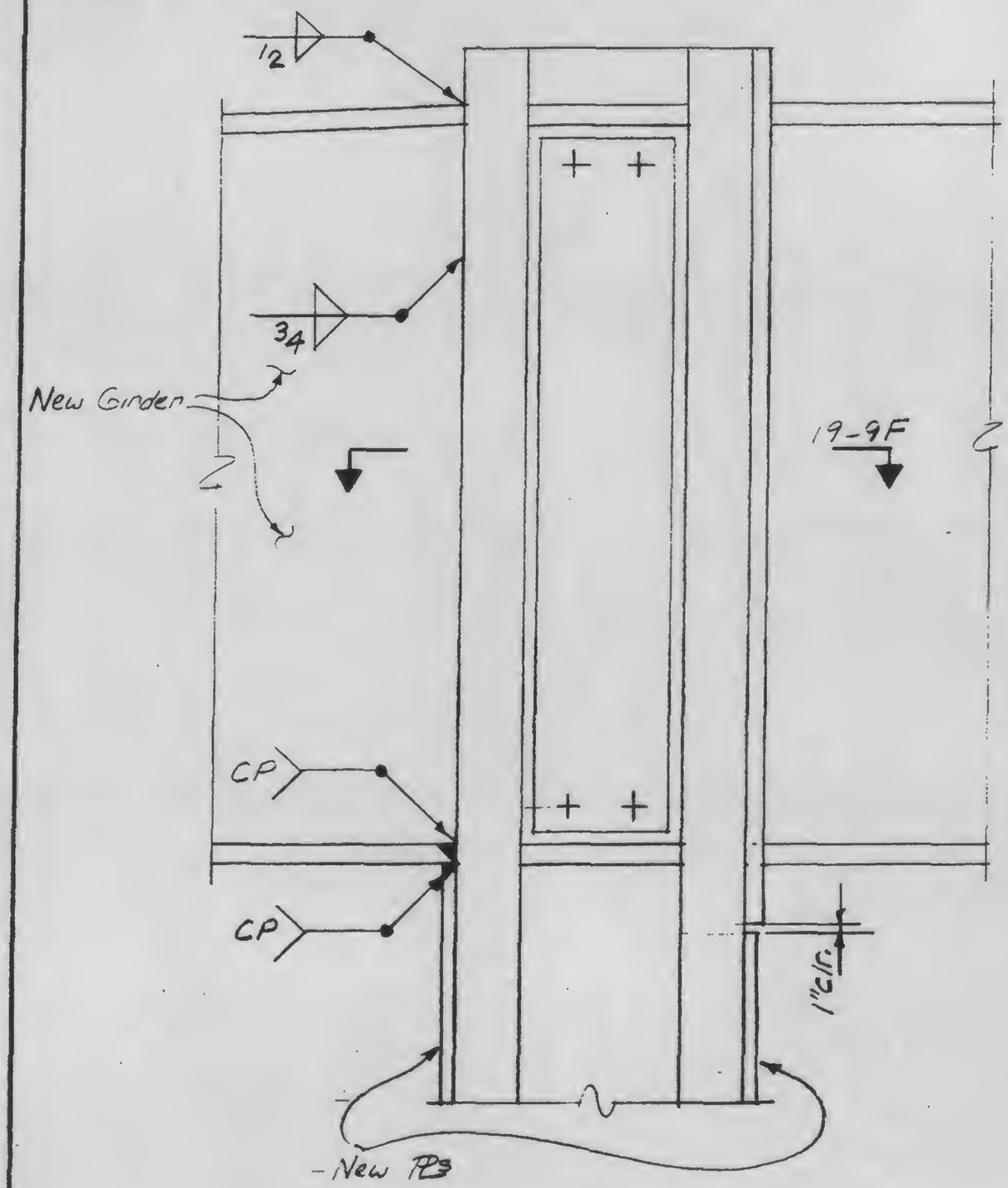

REVISIONS	SKILLING, HELLE, CHRISTIANSEN, ROBERTSON CONSULTING STRUCTURAL AND CIVIL ENGINEERS			DRAWING NO.
2-1-79 Printed	PROJECT NTC-1978 HOTEL-SUPPORT REV.	PROJECT NO. 701.283	BY WAB	13-K19 9.4
	REINFORCING DETAILS - LINE 47			DATE 1-3-79

E

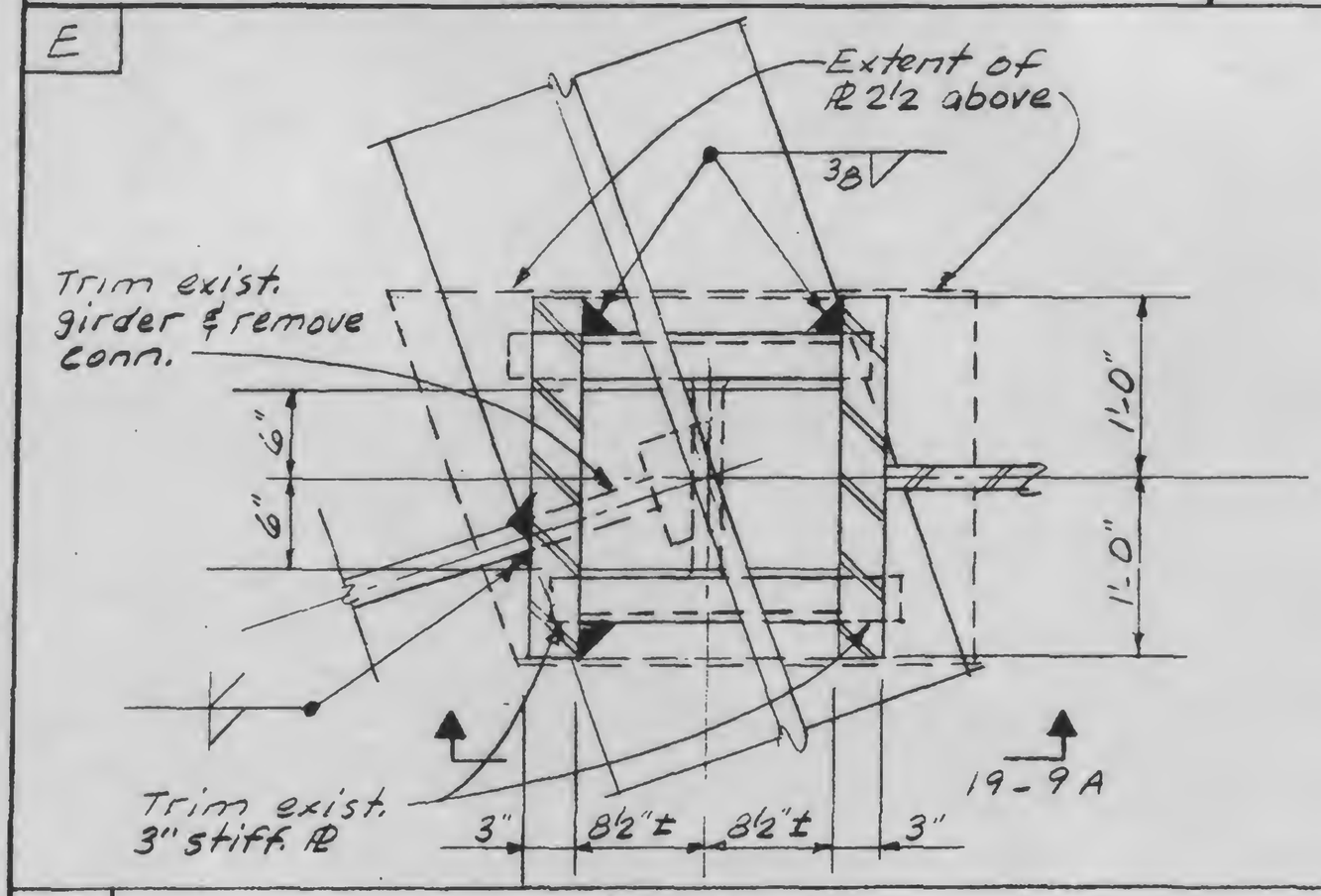

F

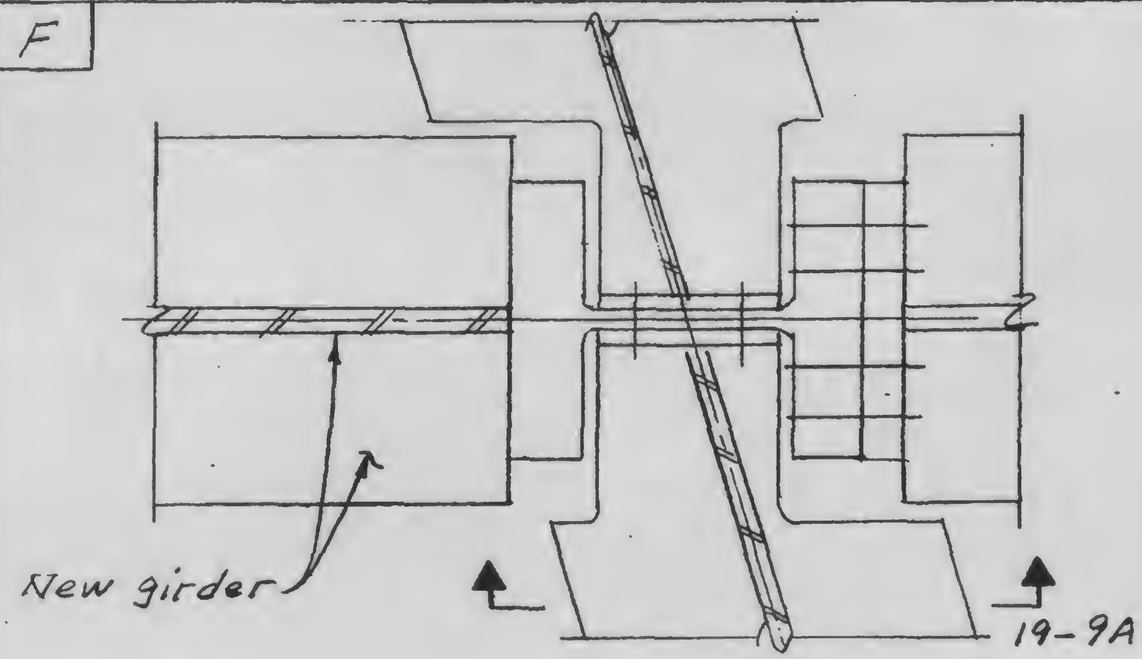

REVISIONS 12-1-79

SKILLING, HELLE, CHRISTIANSEN, ROBERTSON
CONSULTING STRUCTURAL AND CIVIL ENGINEERS

DRAWING NO. 3-K19 10

PROJECT WTC-1978 HOTEL-SUPPORT REI. | PROJECT NO. 701.283 | BY JOB

DATE 1-3-79

FLANGE REINFORCING

A

Ref. 13-K3.1-6C

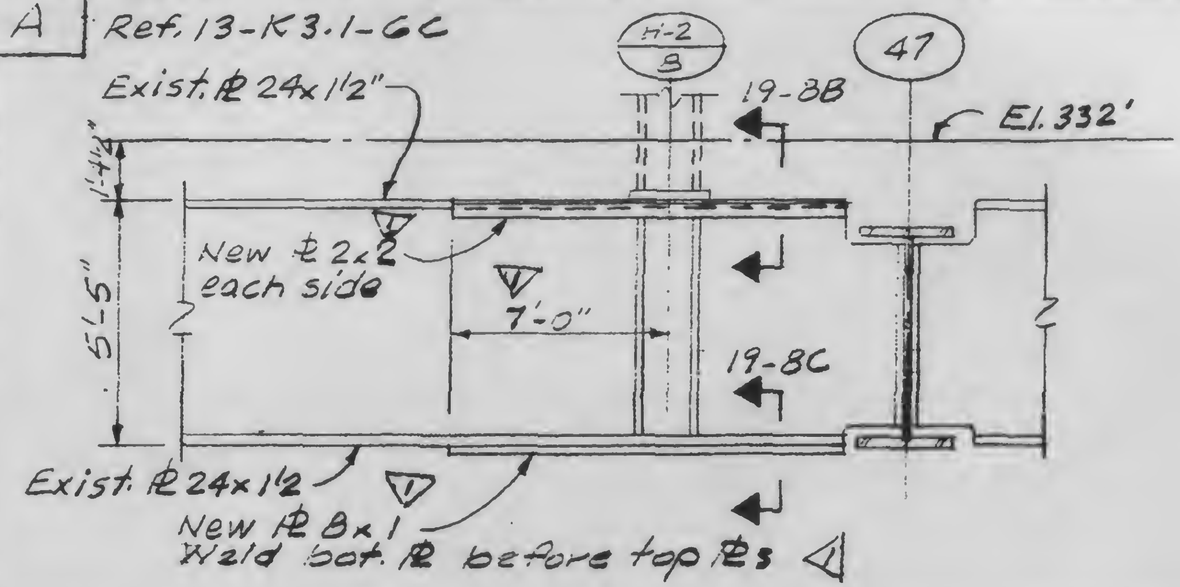

3

Ref. 13-K3.1-8A

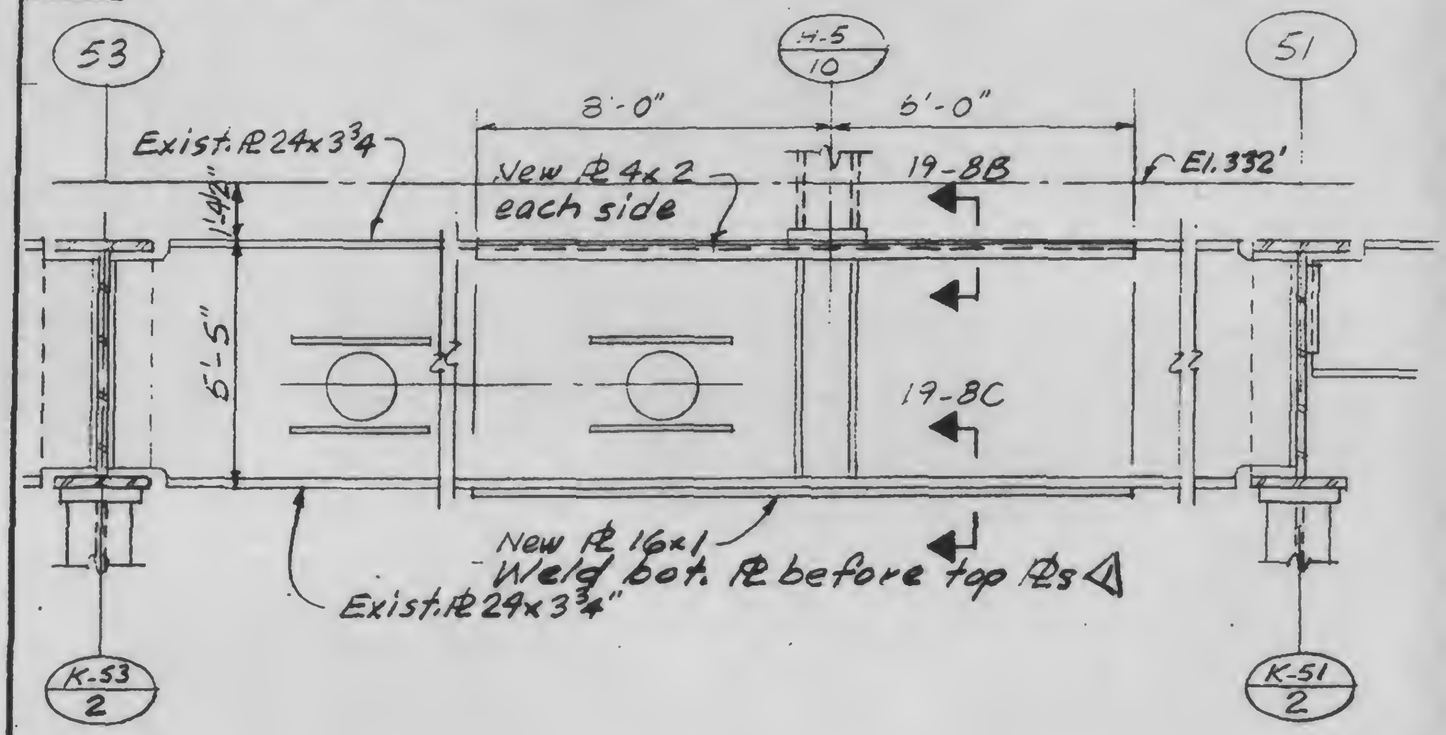

REVISIONS	SKILLING, HELLE, CHRISTIANSEN, ROBERTSON CONSULTING STRUCTURAL AND CIVIL ENGINEERS		DRAWING NO.
1 2-1-79	PROJECT NTC-1978 HOTEL-SUPPORT REV.	PROJECT NO. 701.283 / BY WCB	13-K19 11.1
2 3-20-79	REINFORCING DETAILS		DATE 1-3-79

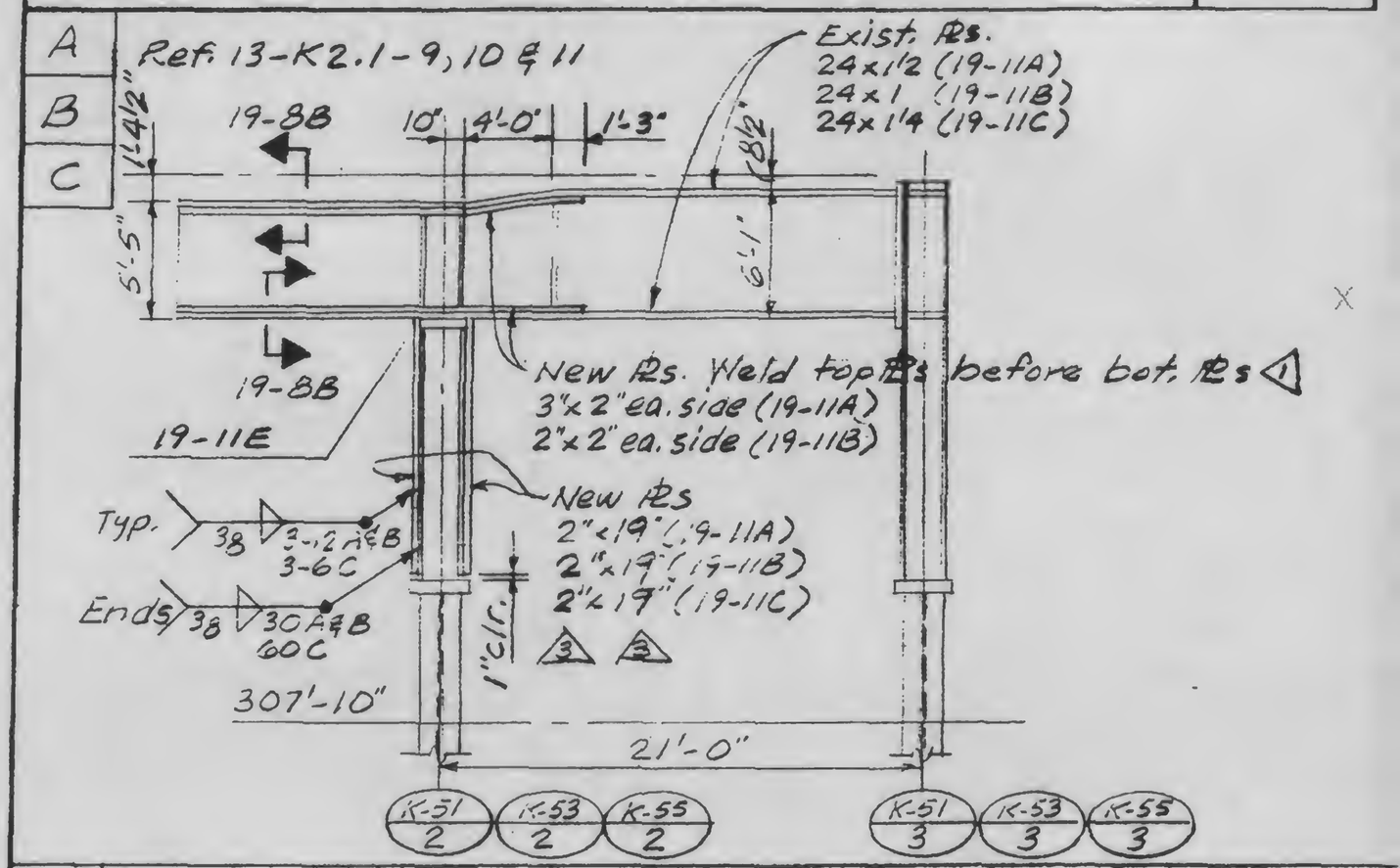

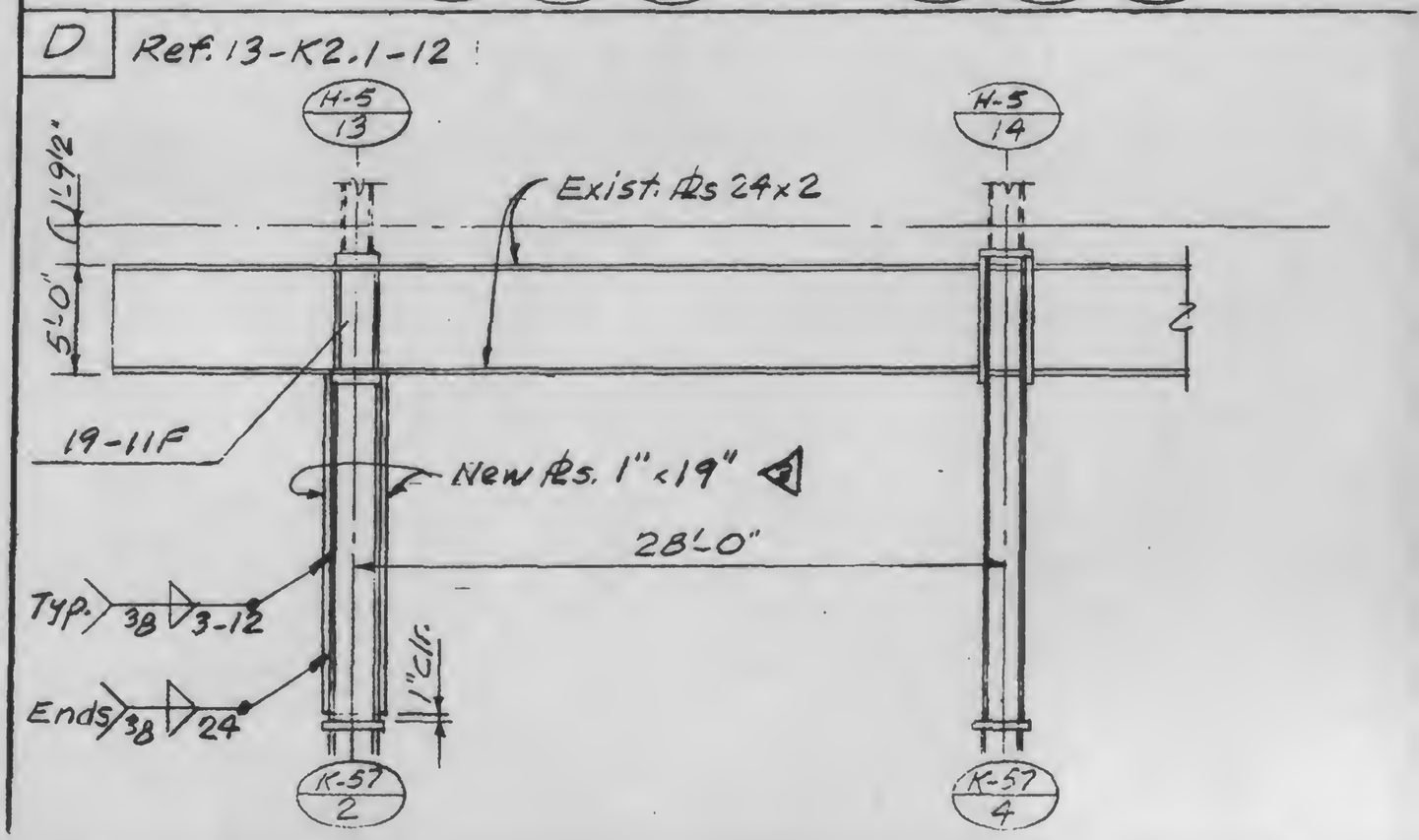

REVISIONS
2-1-79
2-1-79
2-20-79

SKILLING, HELLE, CHRISTIANSEN, ROBERTSON
CONSULTING STRUCTURAL AND CIVIL ENGINEERS

PROJECT NTC-1978 HOTEL-SUPPORT REI | PROJECT NO 701-283 | BY DOB | DRAWING NO 13-K19 11.2

REINFORCING DETAILS

DATE 1-3-79

E — Ref. 13-K2.4-11A, 11B & 11C

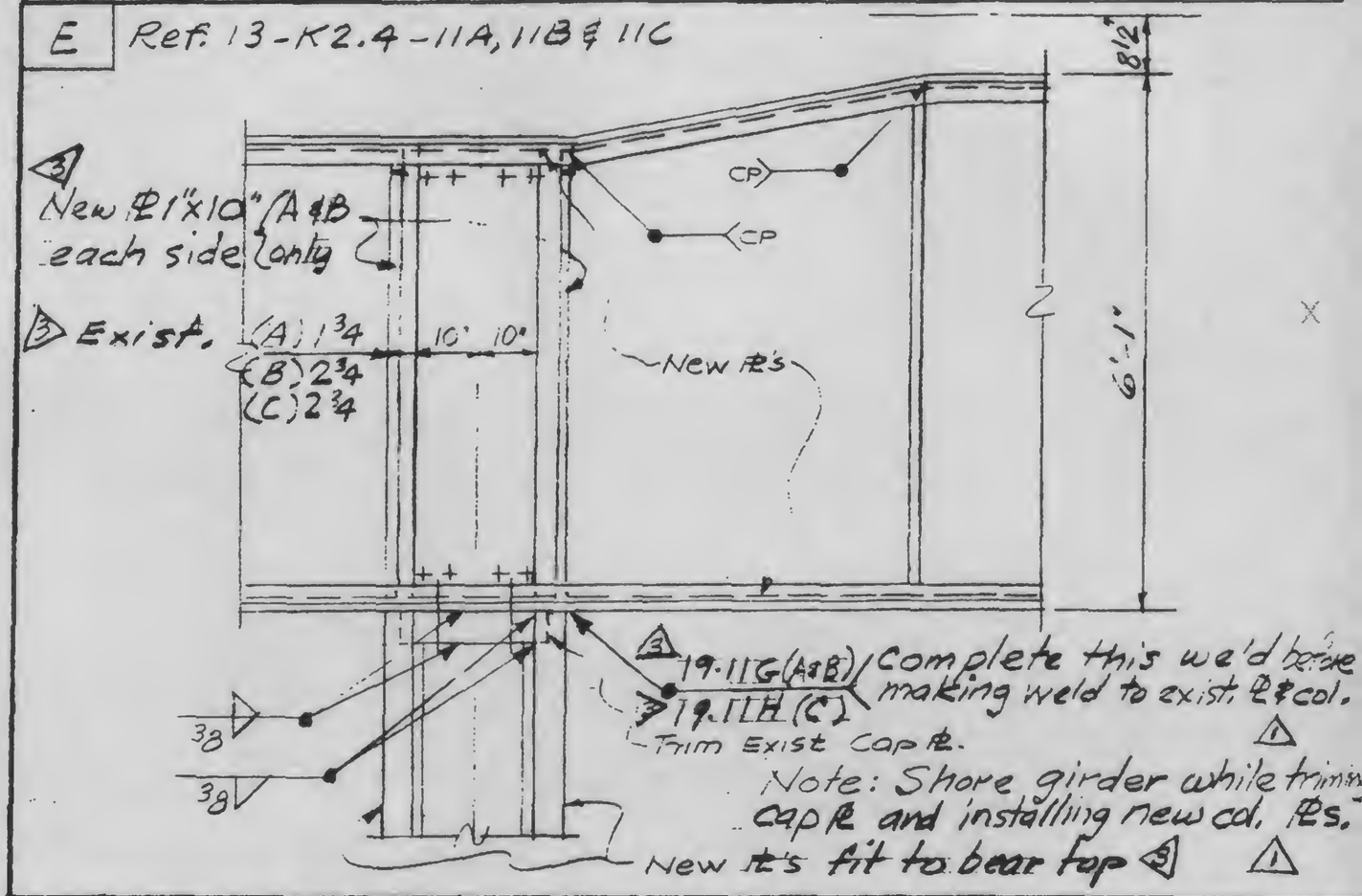

G

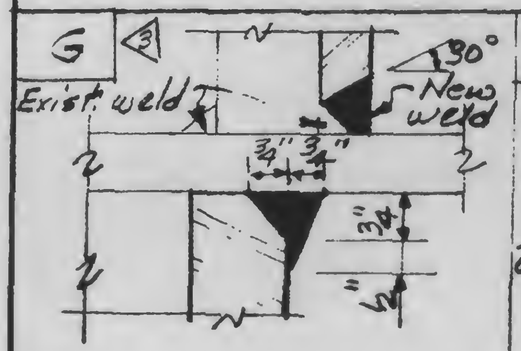

H — *Build exist. ½ to ¾

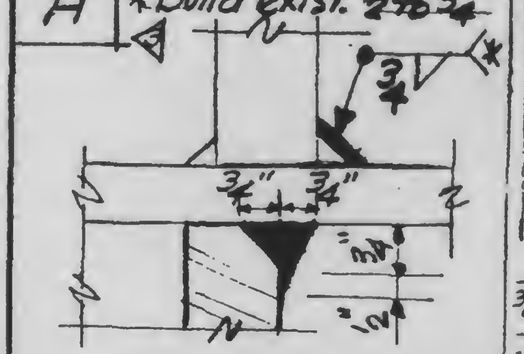

F — Ref. 13-K2.5-4A

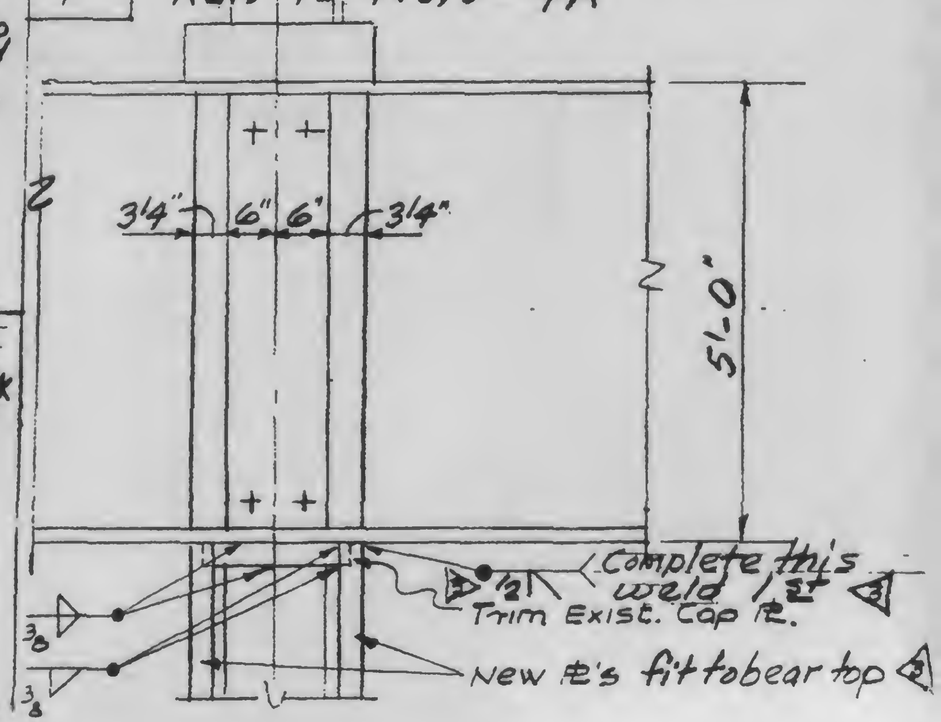

REVISIONS
12-1-79

SKILLING, HELLE, CHRISTIANSEN, ROBERTSON
CONSULTING STRUCTURAL AND CIVIL ENGINEERS

DRAWING NO 13-K19 12

PROJECT NTC-1978 HOTEL - SUPPORT REV. | PROJECT NO. 701.283 | BY WAB

DATE 1-3-79

REINFORCING DETAILS

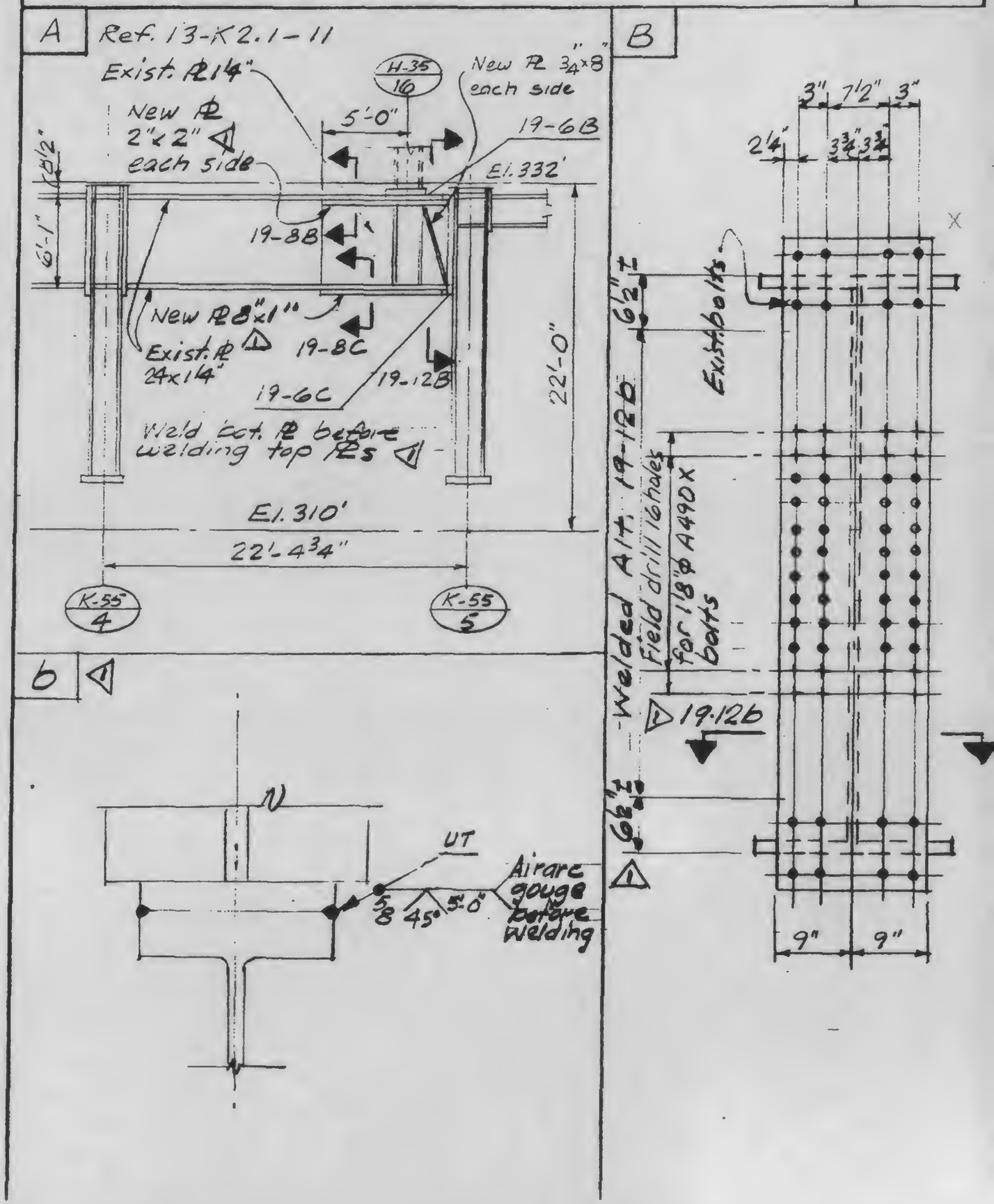

REVISIONS
△2-1-79
△3-12-79

SKILLING, HELLE, CHRISTIANSEN, ROBERTSON
CONSULTING STRUCTURAL AND CIVIL ENGINEERS

PROJECT WTC-1973 HOTEL-SUPPORT REV | PROJECT NO 701.253 | BY WAB

DRAWING NO 13-K19 13

DATE 1-3-79

REINFORCING DETAILS

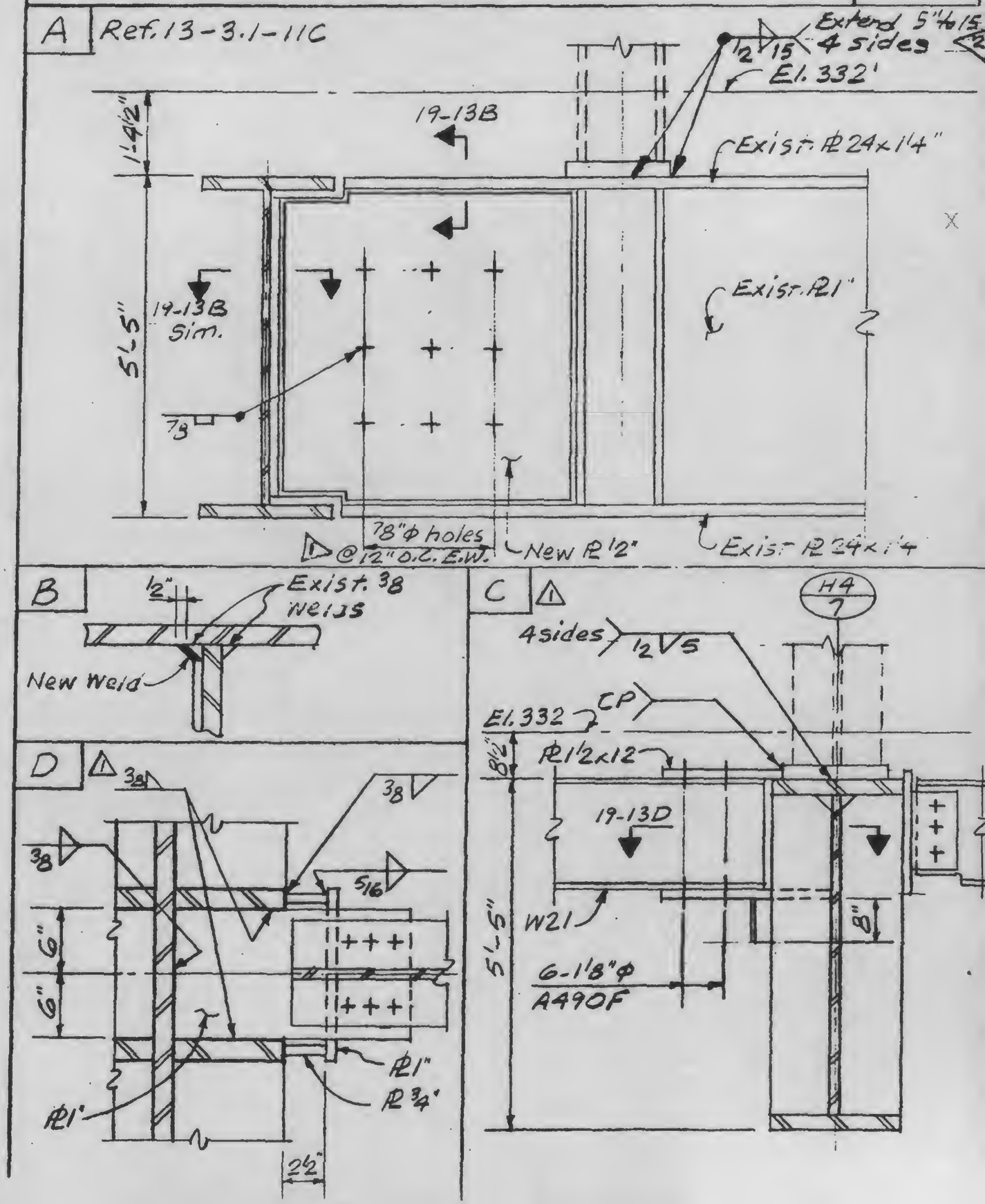

REVISIONS	SKILLING, HELLE, CHRISTIANSEN, ROBERTSON CONSULTING STRUCTURAL AND CIVIL ENGINEERS	DRAWING NO 13-K19 14
	PROJECT WTC-1973 HOTEL-SUPPORT REV. PROJECT NO 701,283 BY WAB	
	HORIZONTAL ANCHOR COL. HS-1	DATE 3-12-79

PLAN

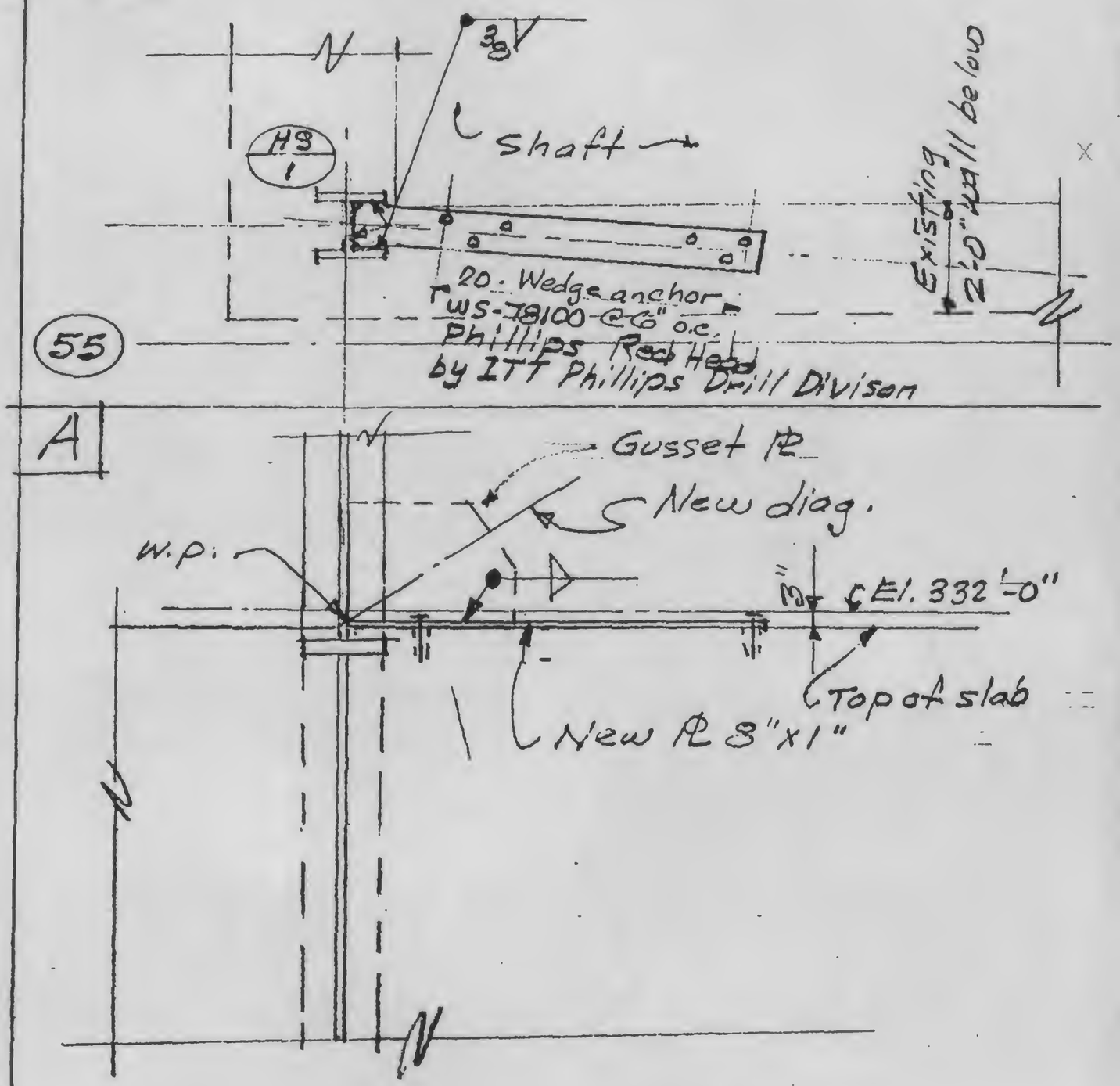

REVISIONS	SKILLING, HELLE, CHRISTIANSEN, ROBERTSON CONSULTING STRUCTURAL AND CIVIL ENGINEERS	DRAWING NO.
10/5/79	PROJECT WTC-1978 HOTEL-SUPPORT REV. / PROJECT NO. 701.283 / BY WAB	13-K19-15.1
	TRANSFORMER AREA-DEMOLITION PLAN-EL. 307-4	DATE 9/7/79

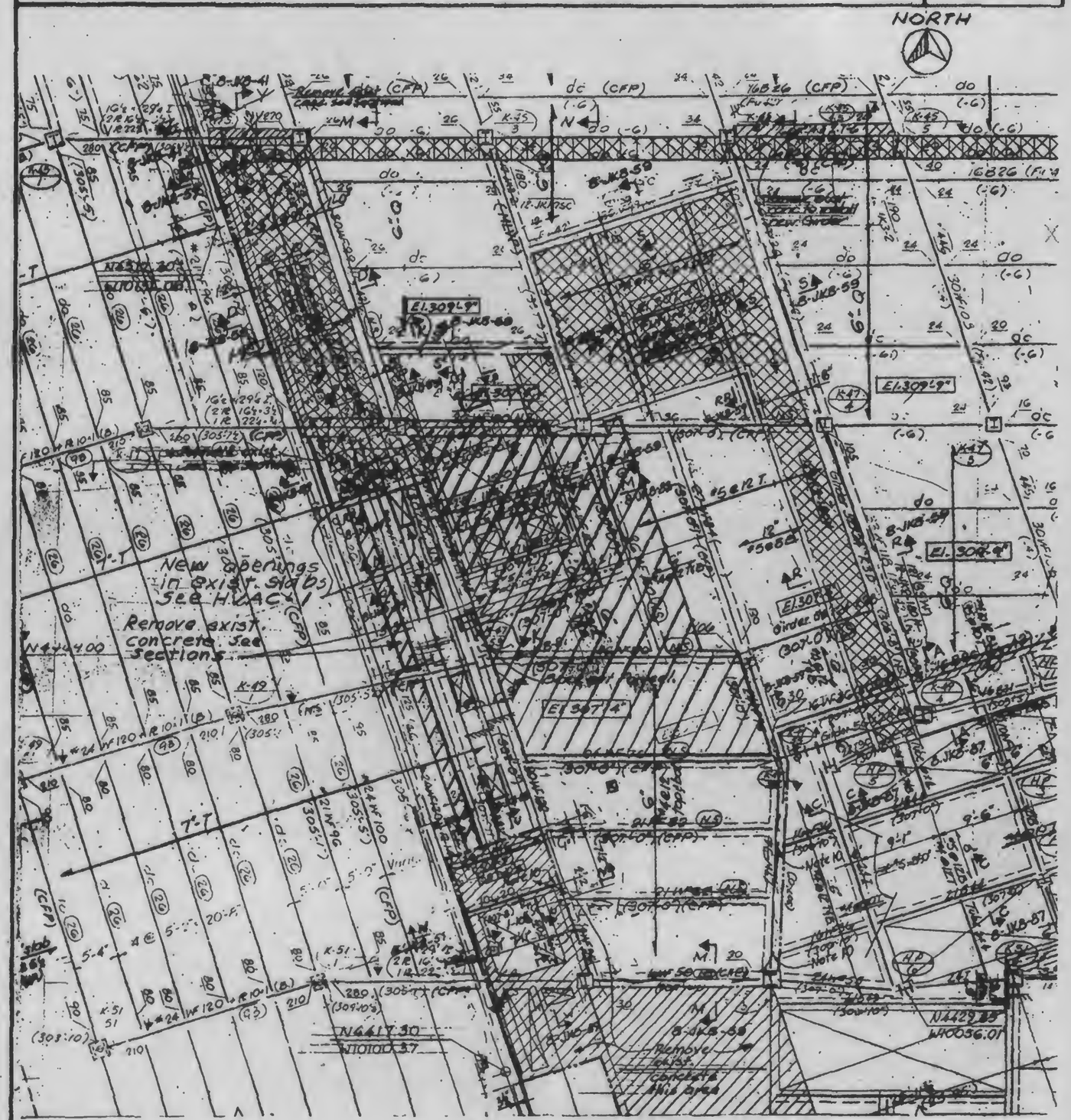

REVISIONS 10/3/79

SKILLING, HELLE, CHRISTIANSEN, ROBERTSON
CONSULTING STRUCTURAL AND CIVIL ENGINEERS

DRAWING NO. 13-K19-15.2

PROJECT NTC- HOTEL-SUPPORT REV. | PROJECT NO 701.238 | BY WAB

DATE 9/7/79

TRANSFORMER AREA-FRAMING PLAN EL. 310

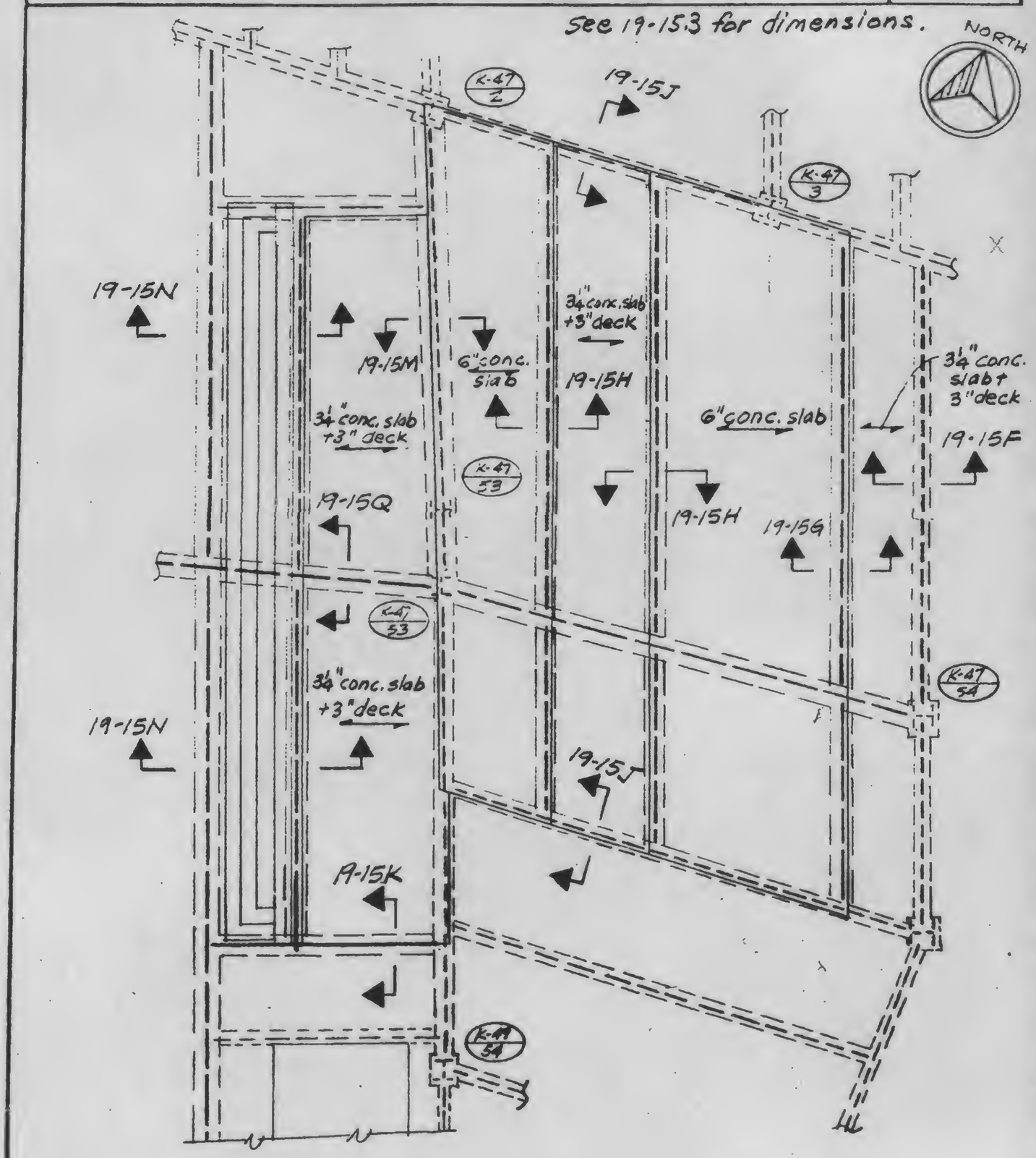

REVISIONS
10/5/79

SKILLING, HELLE, CHRISTIANSEN, ROBERTSON
CONSULTING STRUCTURAL AND CIVIL ENGINEERS

DRAWING NO. 13-K19-15.3

PROJECT: NTC - HOTEL - SUPPORT REV | PROJECT NO. 701.283 | BY HAB

TRANSFORMER AREA - FRAMING PLAN - EL. 307±

DATE 9/7/79

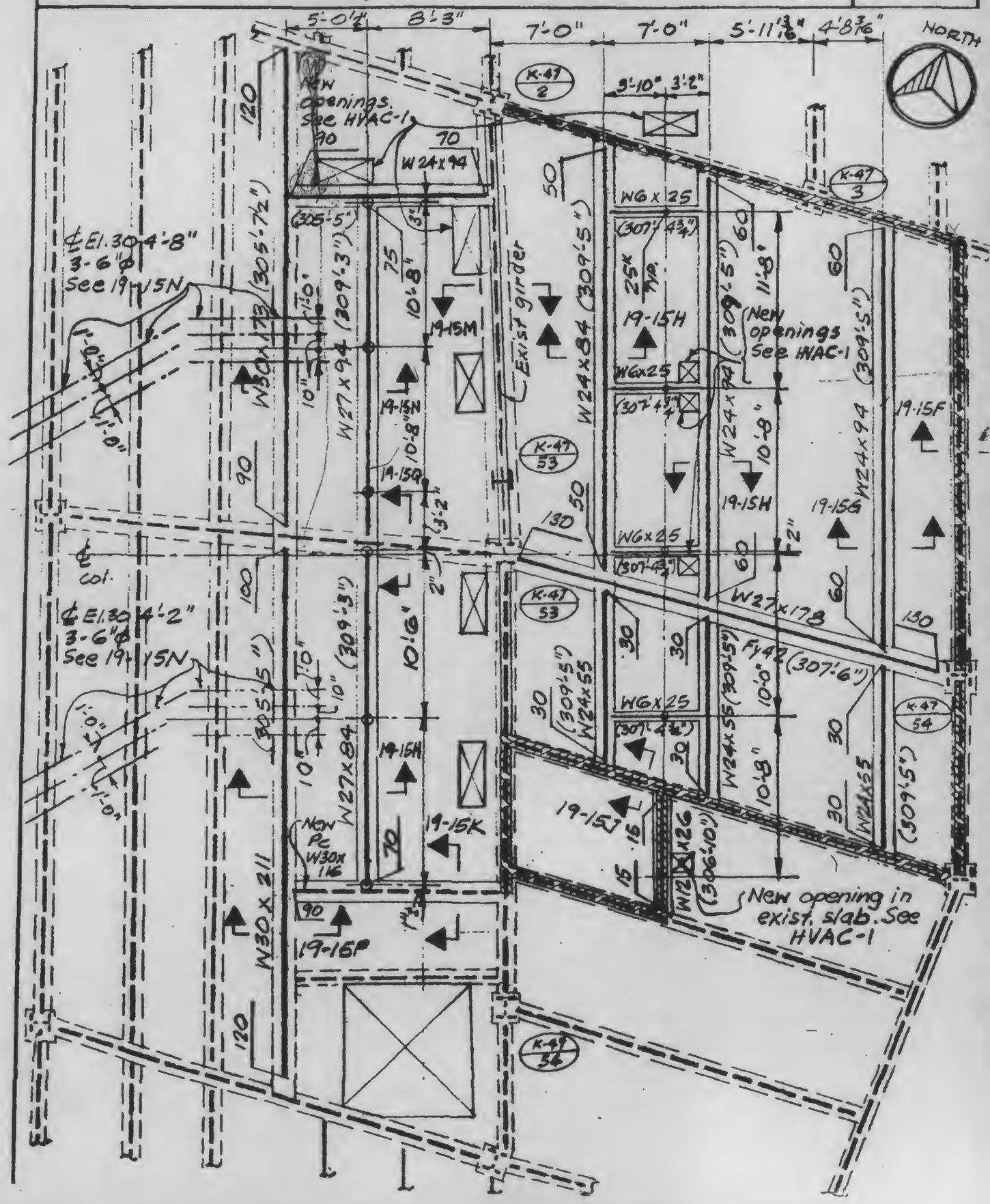

REVISIONS 6/5/79	SKILLING, HELLE, CHRISTIANSEN, ROBERTSON CONSULTING STRUCTURAL AND CIVIL ENGINEERS		DRAWING NO. 13-K19-15.4
	PROJECT NTC-1978 HOTEL-SUPPORT REV.	PROJECT NO. 701.233 / BY NAB	
	TRANSFORMER AREA - FRAMING PLAN 294		DATE 9/7/79

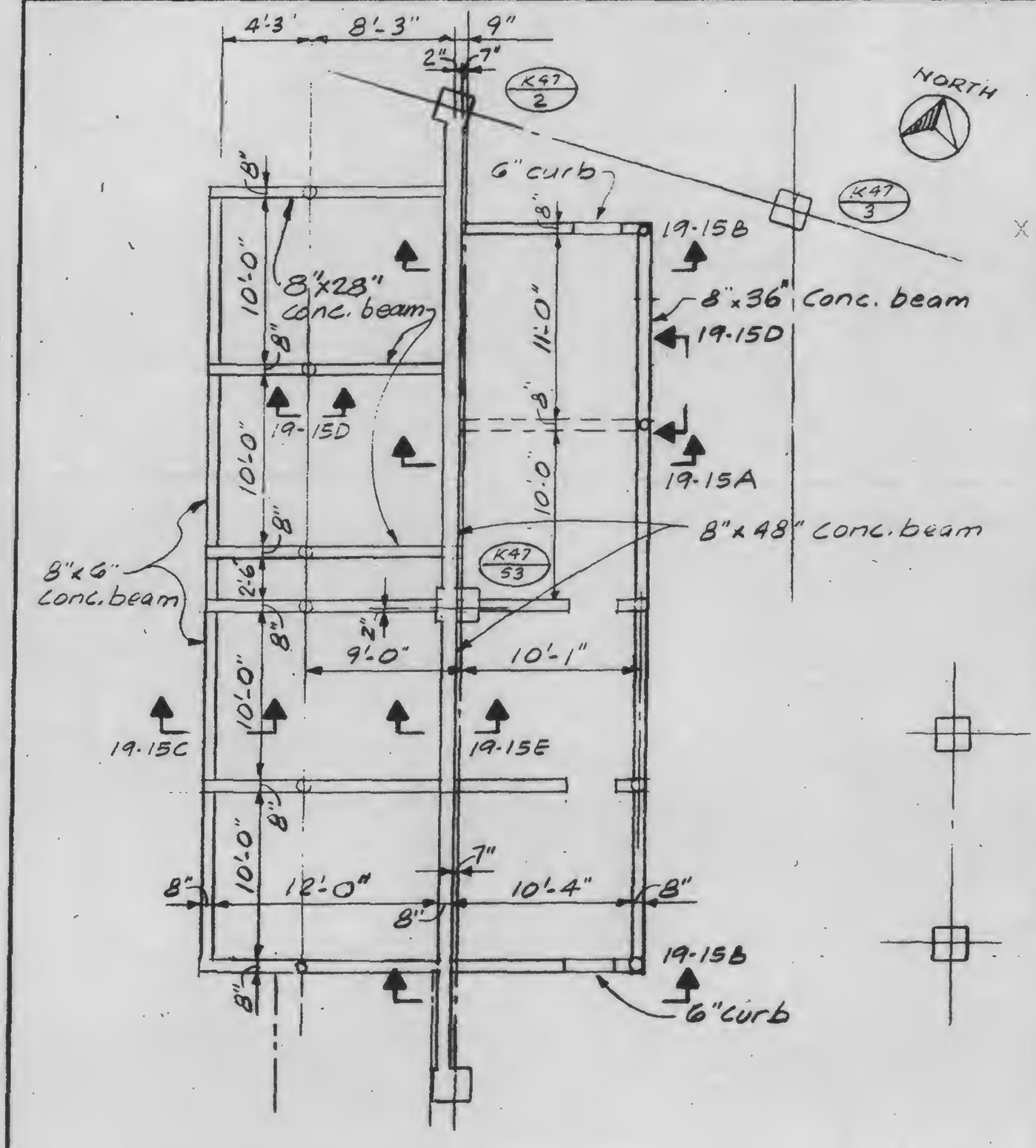

REVISIONS
10/5/79

SKILLING, HELLE, CHRISTIANSEN, ROBERTSON
CONSULTING STRUCTURAL AND CIVIL ENGINEERS

DRAWING NO. 13-K19-15.5

PROJECT WTC-1973 HOTEL-SUPPORT REV. | PROJECT NO 701.283 | BY WAB

DATE 9/7/79

TRANSFORMER AREA - SECTIONS 2'4

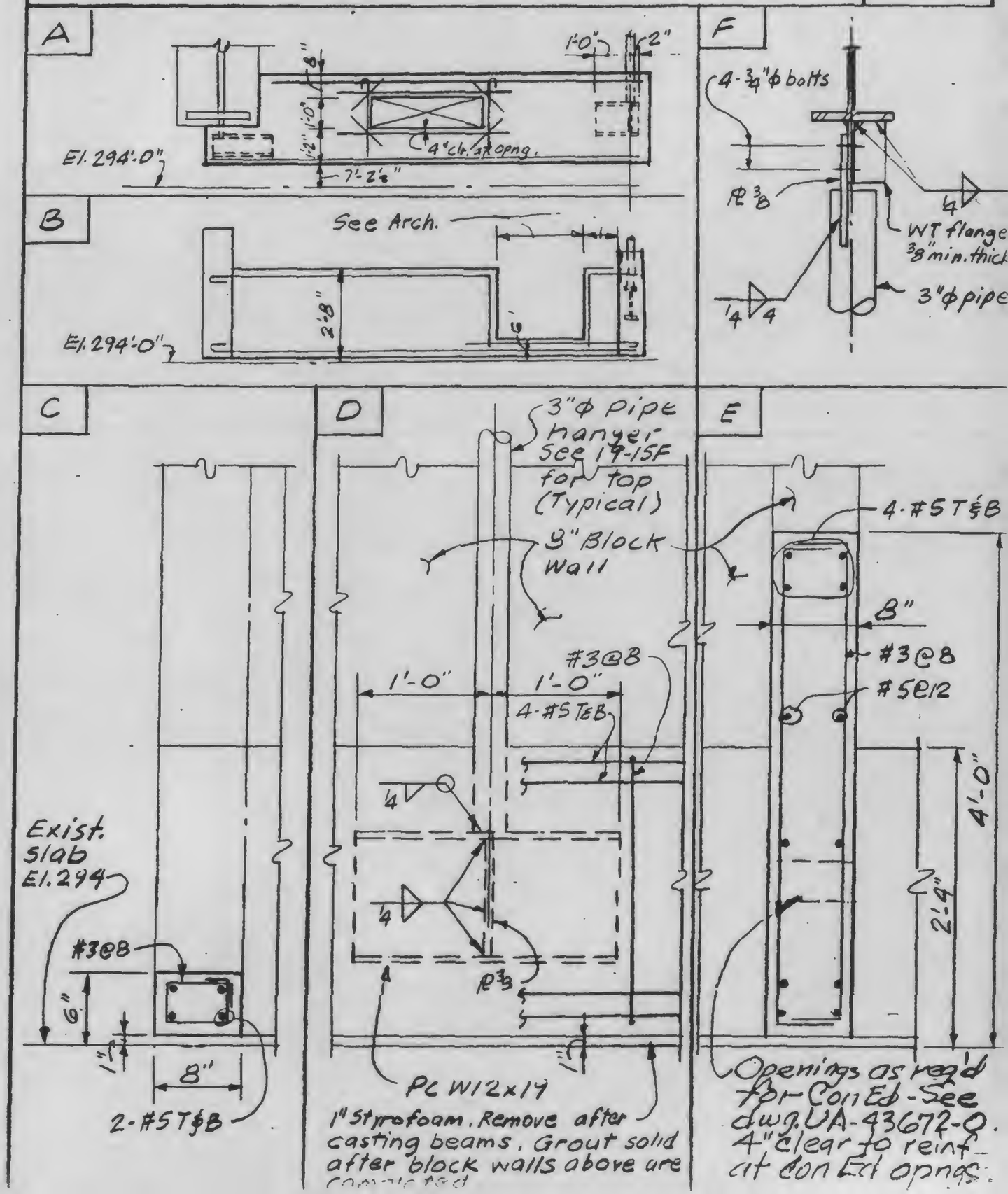

REVISIONS
10/5/79

SKILLING, HELLE, CHRISTIANSEN, ROBERTSON
CONSULTING STRUCTURAL AND CIVIL ENGINEERS

DRAWING NO. 13-K19-15.6

PROJECT NTC - HOTEL - SUPPORT REV | PROJECT NO. 701.238 | BY WAB

DATE 9/7/79

TRANSFORMER AREA - SECTIONS 307 - 310

F

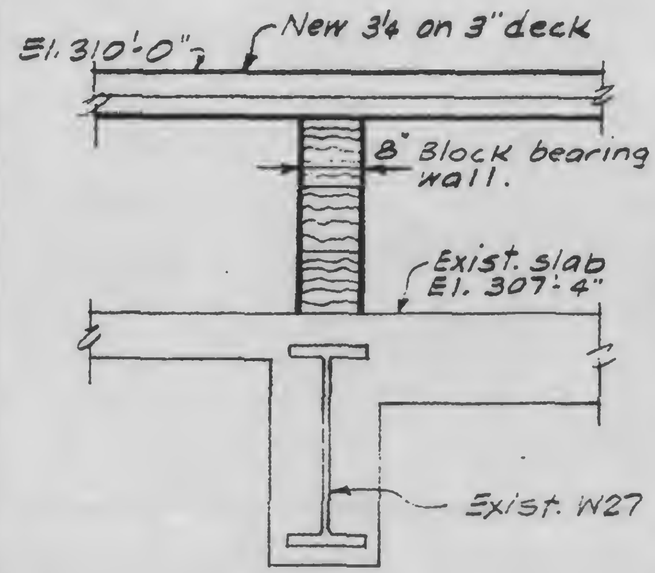

G

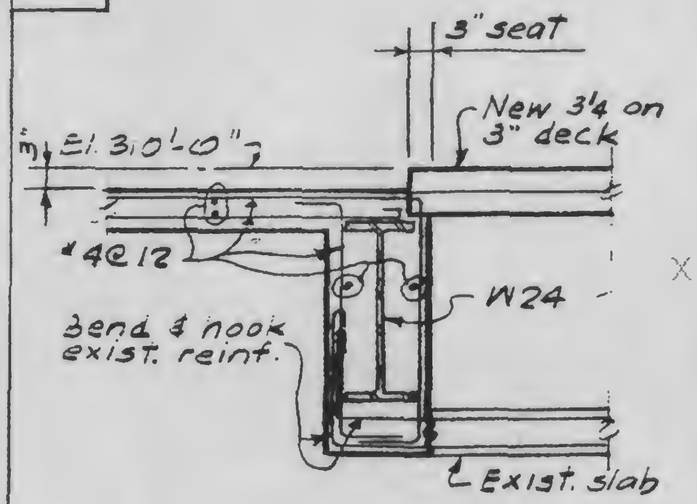

H

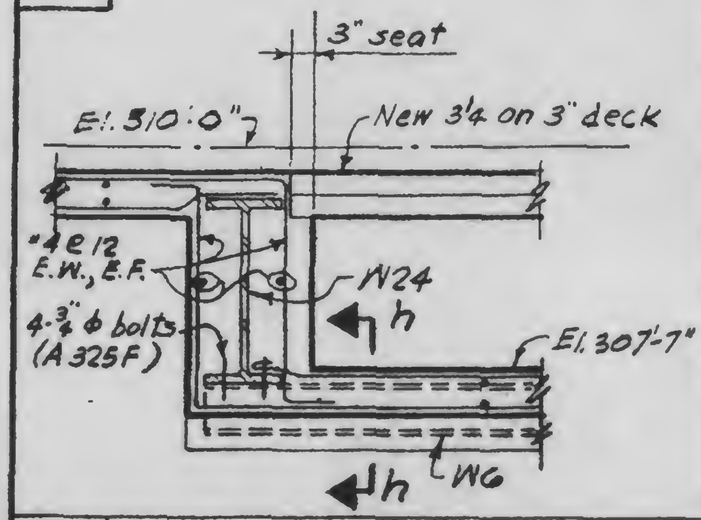

J

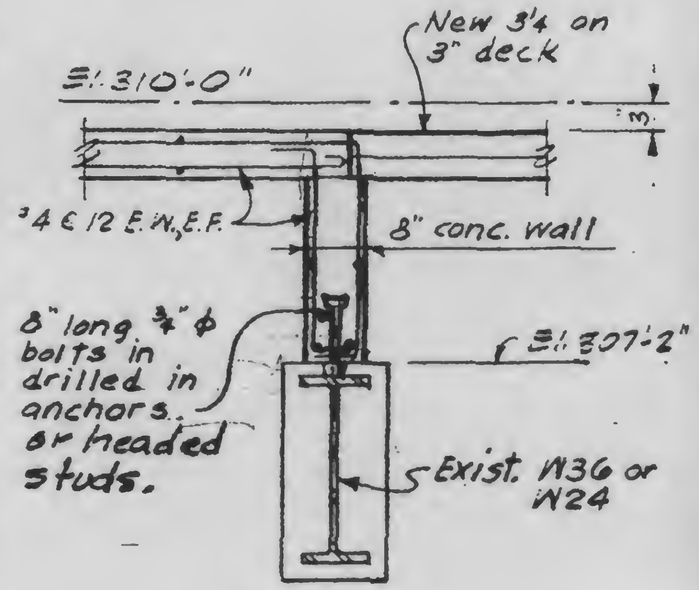

h

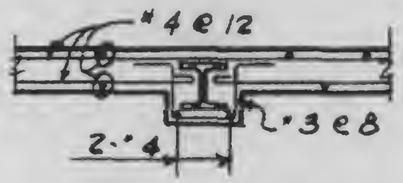

REVISIONS 10/5/79

SKILLING, HELLE, CHRISTIANSEN, ROBERTSON
CONSULTING STRUCTURAL AND CIVIL ENGINEERS

DRAWING NO. 13-K19-15.7

PROJECT WTC- HOTEL SUPPORT REV. | PROJECT NO 701.238 | BY WAB

DATE 9/7/79

TRANSFORMER AREA - SECTIONS 307-310

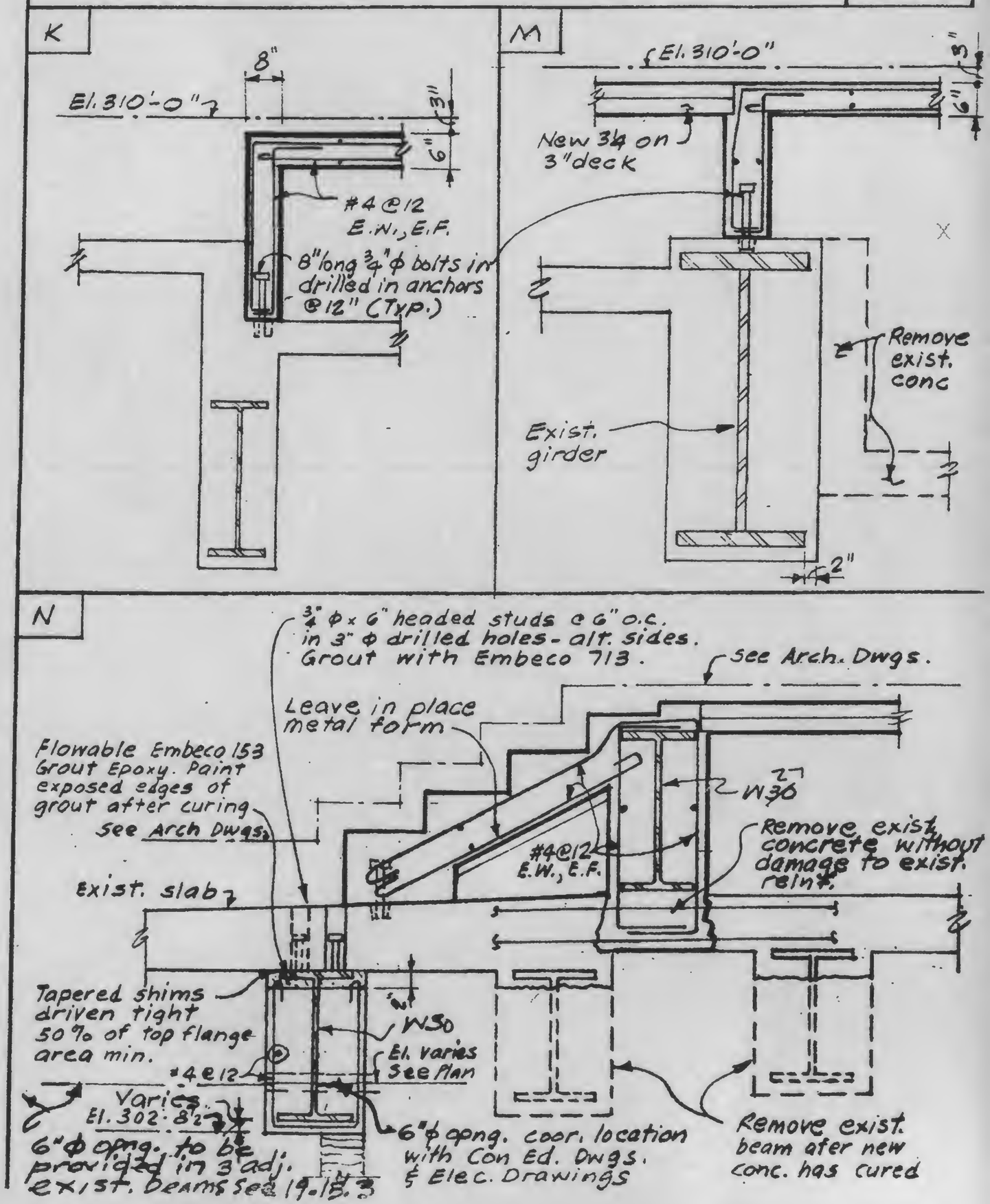

REVISIONS 10/5/79

SKILLING, HELLE, CHRISTIANSEN, ROBERTSON
CONSULTING STRUCTURAL AND CIVIL ENGINEERS

DRAWING NO. 13-K19-15.8

PROJECT NTC - HOTEL - SUPPORT REV. | PROJECT NO 701.238 | BY WAB

TRANSFORMER AREA - SECTIONS 307-310

DATE 9/7/79

P

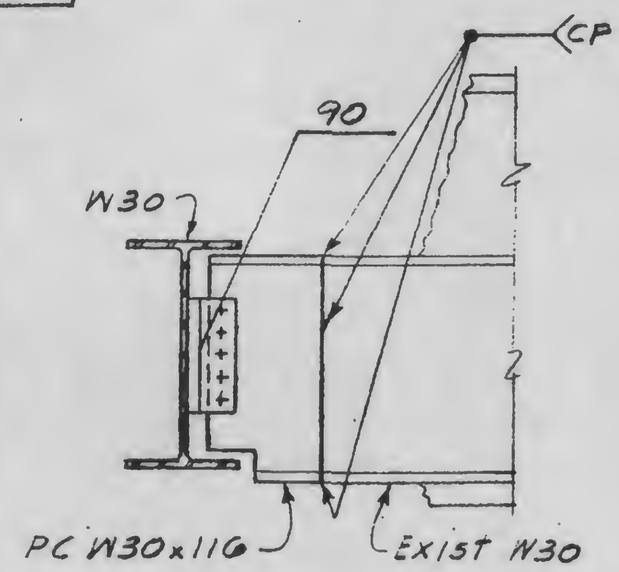

Q

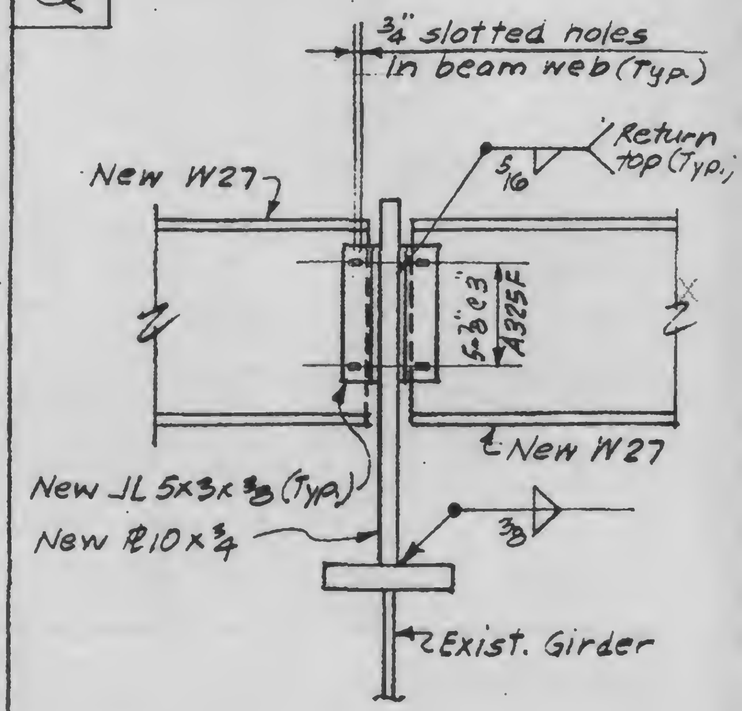

REVISIONS	SKILLING, HELLE, CHRISTIANSEN, ROBERTSON CONSULTING STRUCTURAL AND CIVIL ENGINEERS			DRAWING NO.
For coor. 4-6-79 Gen Rev. 3-[illegible]-79	PROJECT WTC-1978 HOTEL SUPPORT REV.	PROJECT NO. 701-283	BY	13-K19 16
	EL. 294 - REFRIGERATION MACH. SUPPORTS			DATE 3-12-79

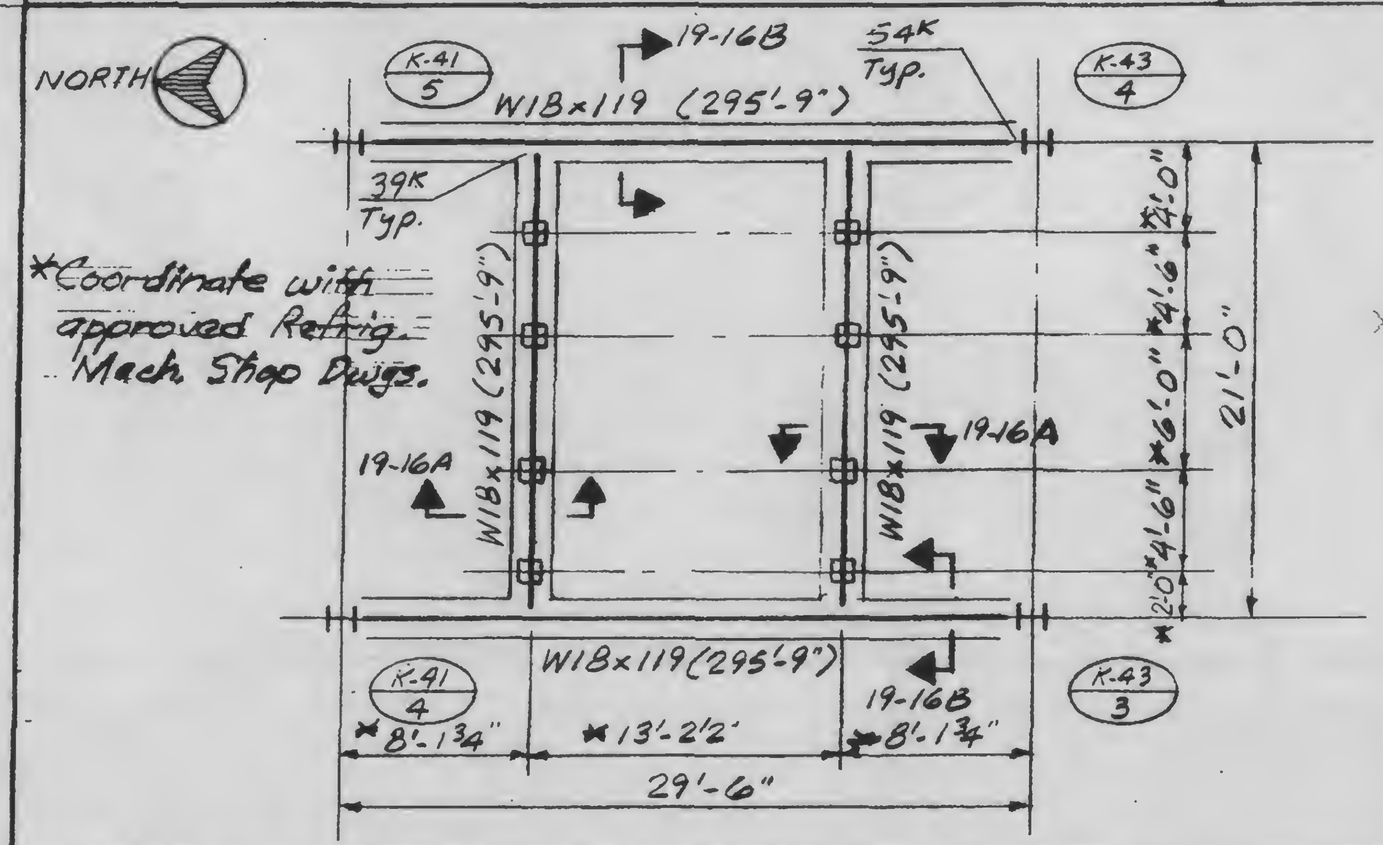

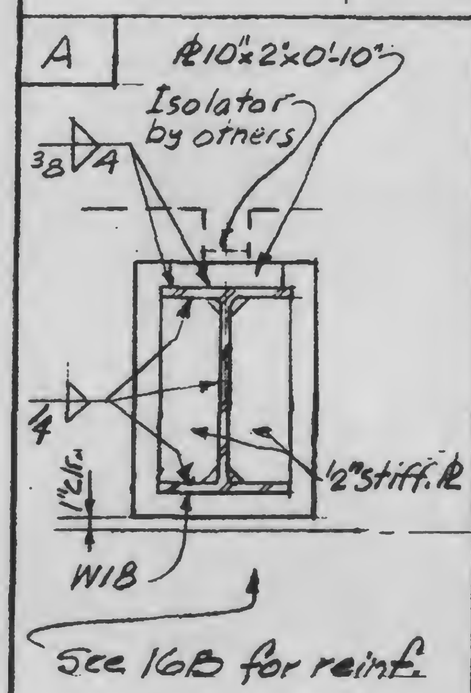

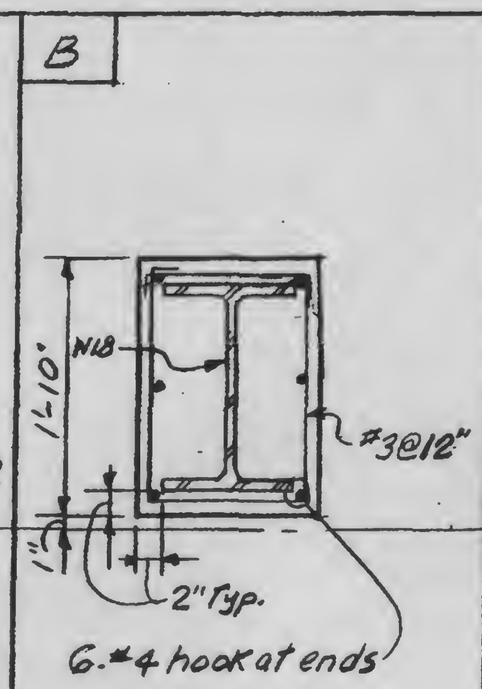

El. 294

REVISIONS

SKILLING, HELLE, CHRISTIANSEN, ROBERTSON
CONSULTING STRUCTURAL AND CIVIL ENGINEERS

PROJECT WTC-1978 HOTEL SUPPORT REV. | PROJECT NO 701.283 | BY WAB

DRAWING NO 13-K19 17

REINFORCING AT NEW OPENINGS EL. 332

DATE 3-12-79

PLAN

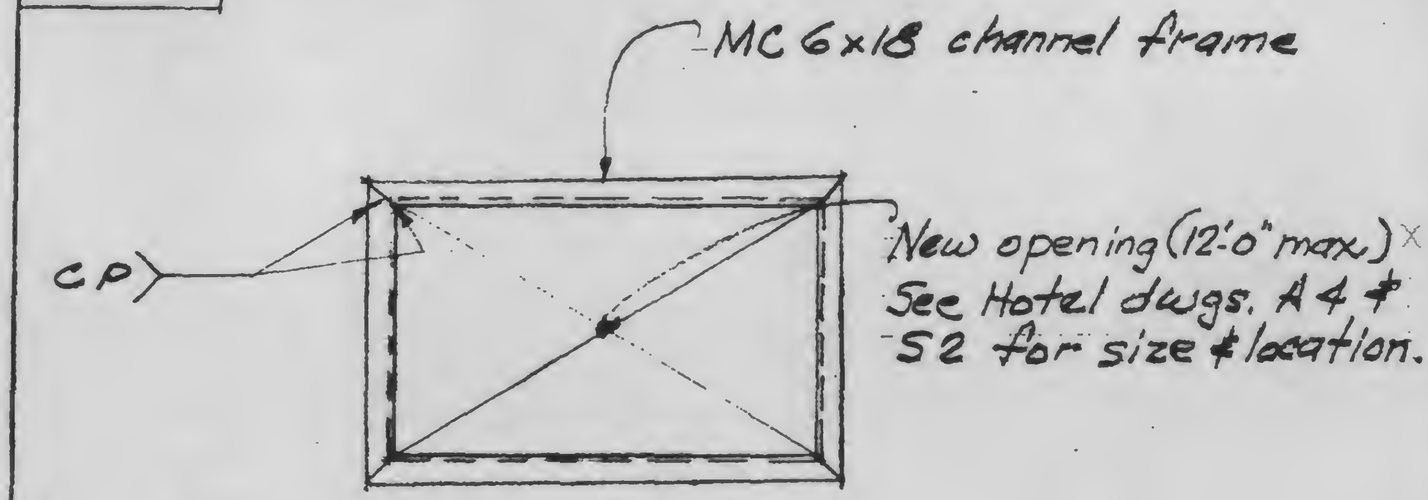

TYP. SECTION

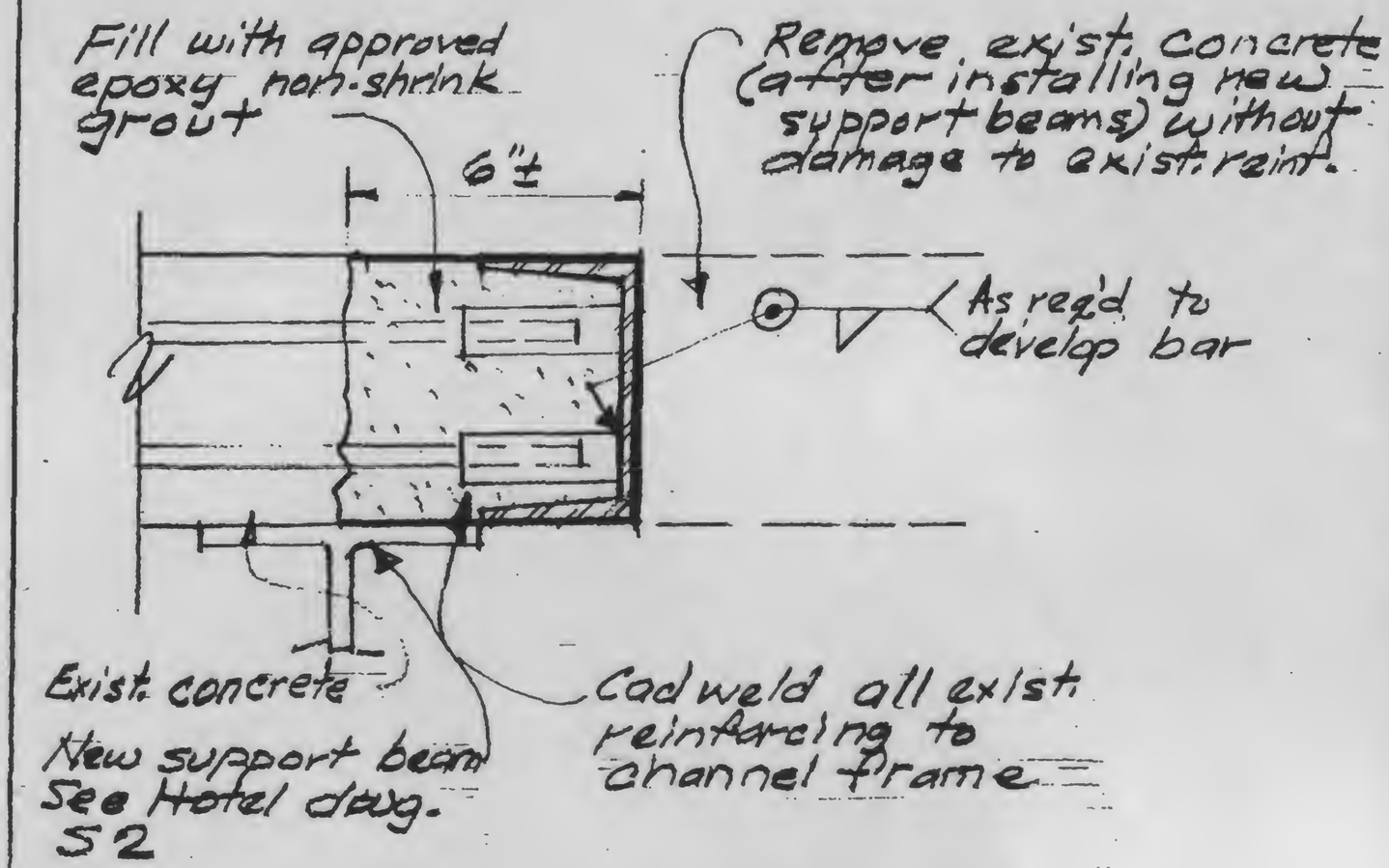

VISIONS	SKILLING, HELLE, CHRISTIANSEN, ROBERTSON CONSULTING STRUCTURAL AND CIVIL ENGINEERS		DRAWING NO 13-K19 17 ALT.
	PROJECT WTC - 1978 HOTEL SUPPORT REV.	PROJECT NO 701.283 BY WAB	
	REINFORCING AT NEW OPENINGS EL. 332		DATE 4/6/79

PLAN

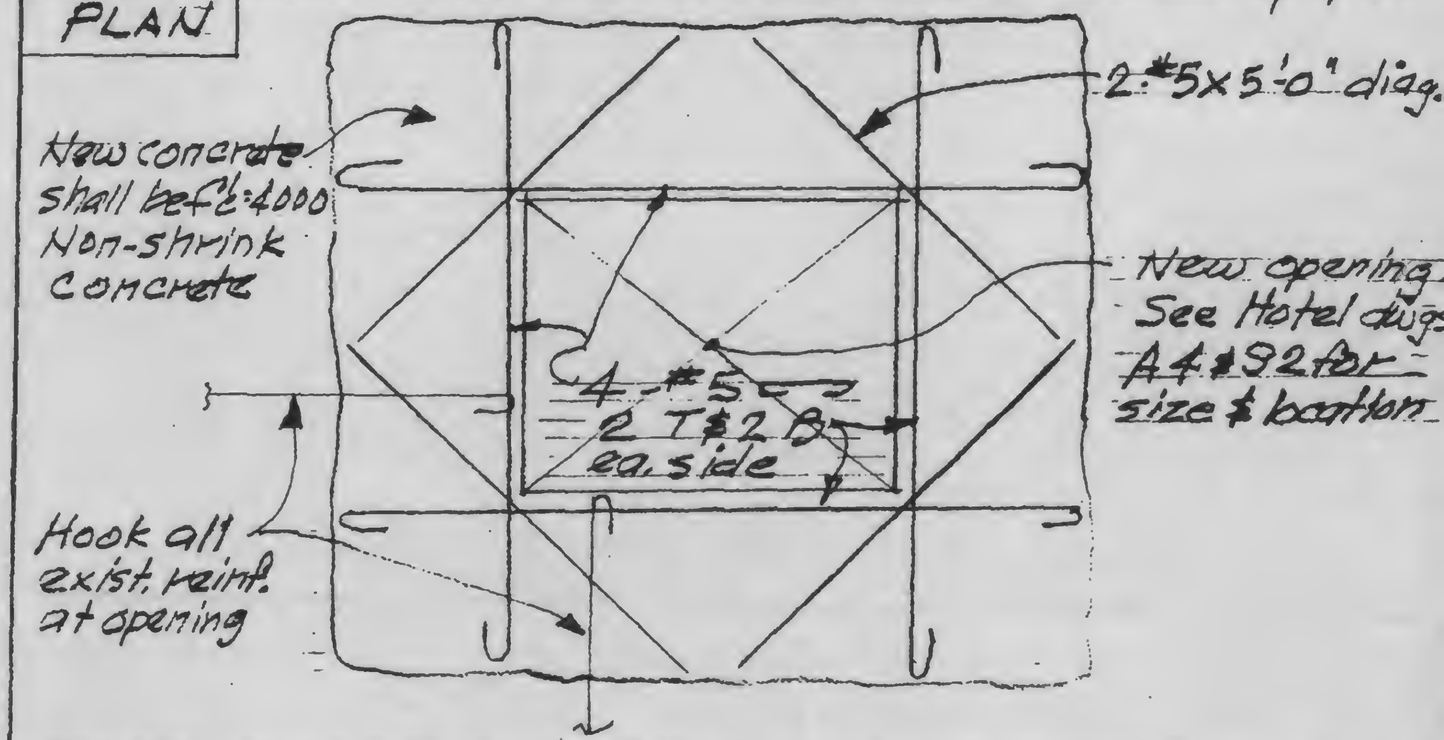

SECTION

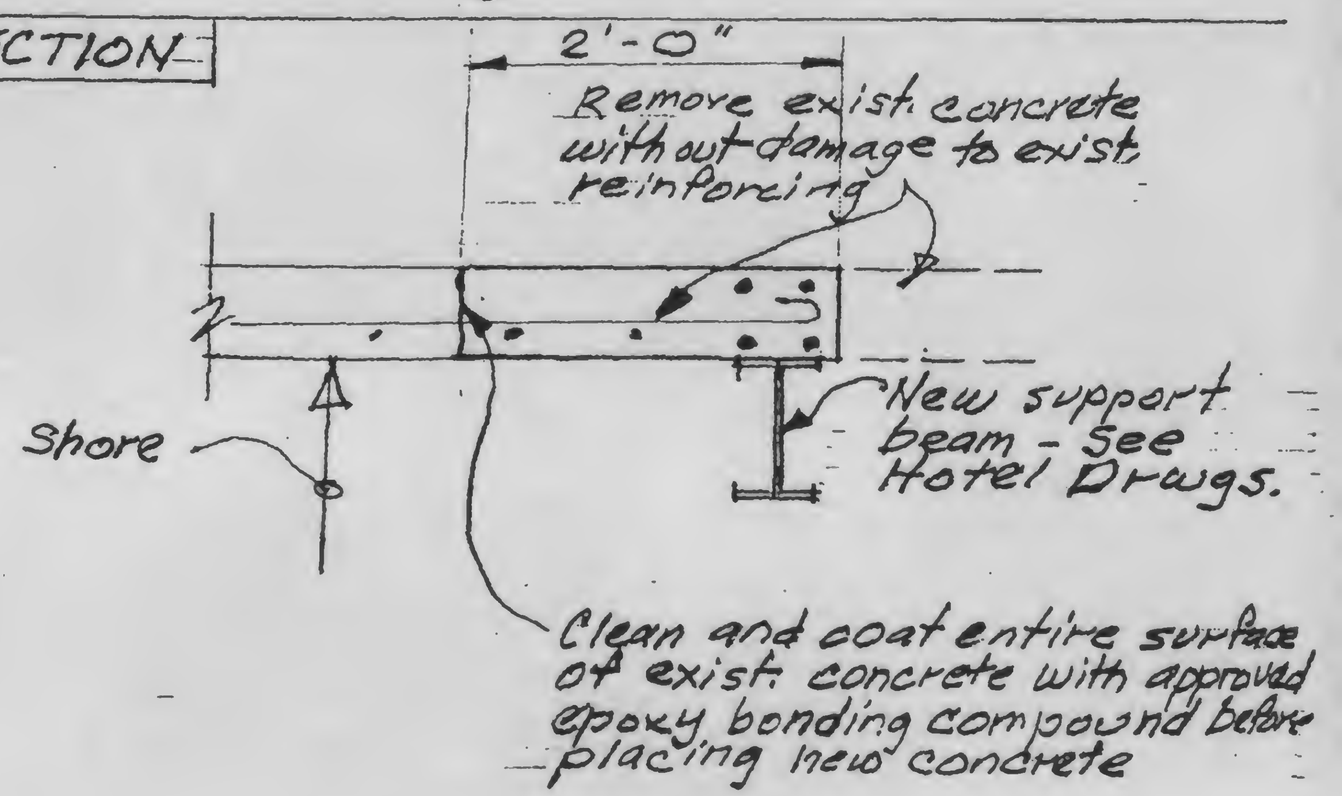

REVISIONS	SKILLING, HELLE, CHRISTIANSEN, ROBERTSON CONSULTING STRUCTURAL AND CIVIL ENGINEERS	DRAWING NO.
11-15 79	PROJECT WTC-1978 HOTEL SUPPORT REV. — PROJECT NO. 701-293 — BY	13-K19 18.1
	NEW ELEVATOR SUPPORT-EL. 294 & 310	DATE 4/6/77

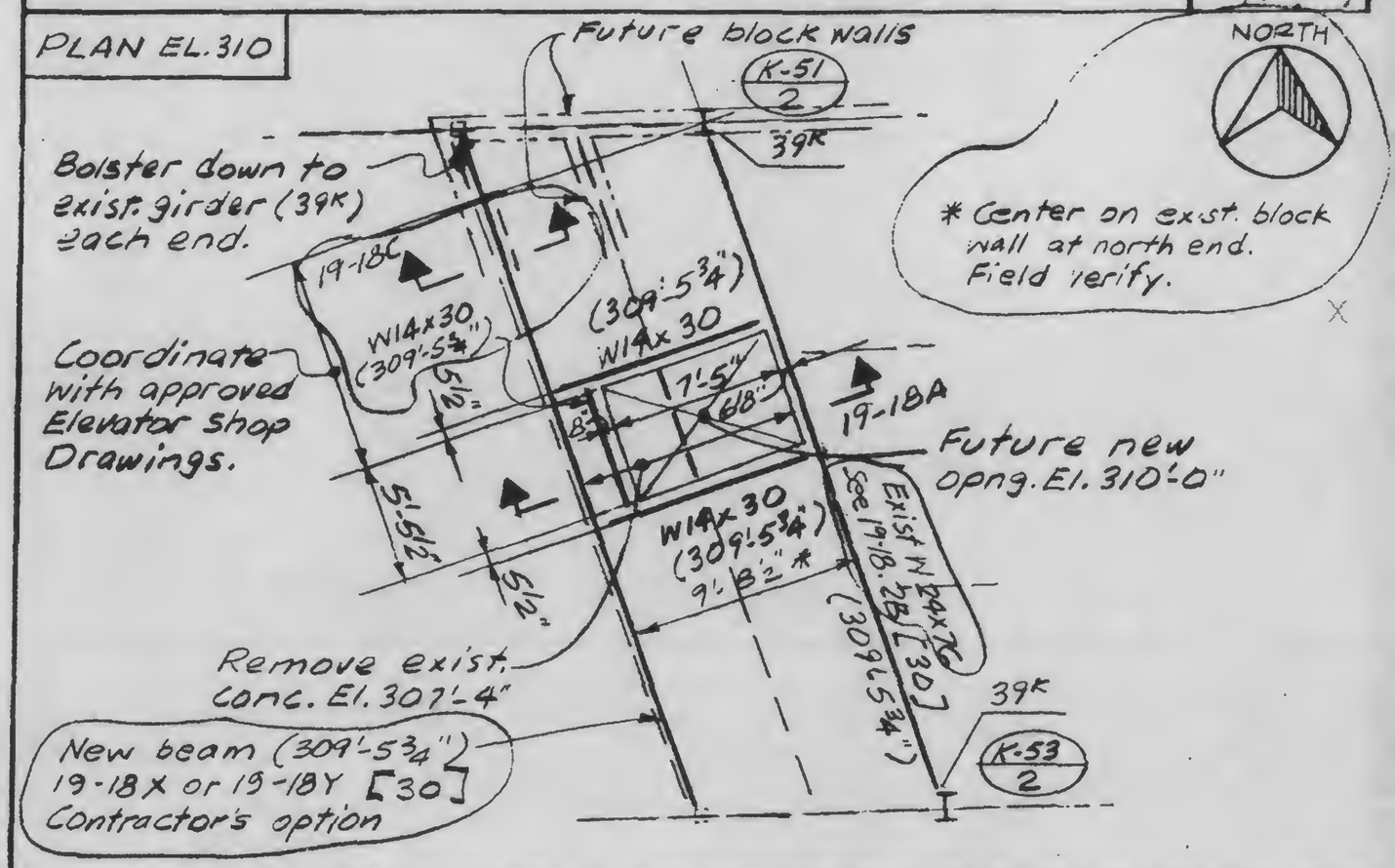

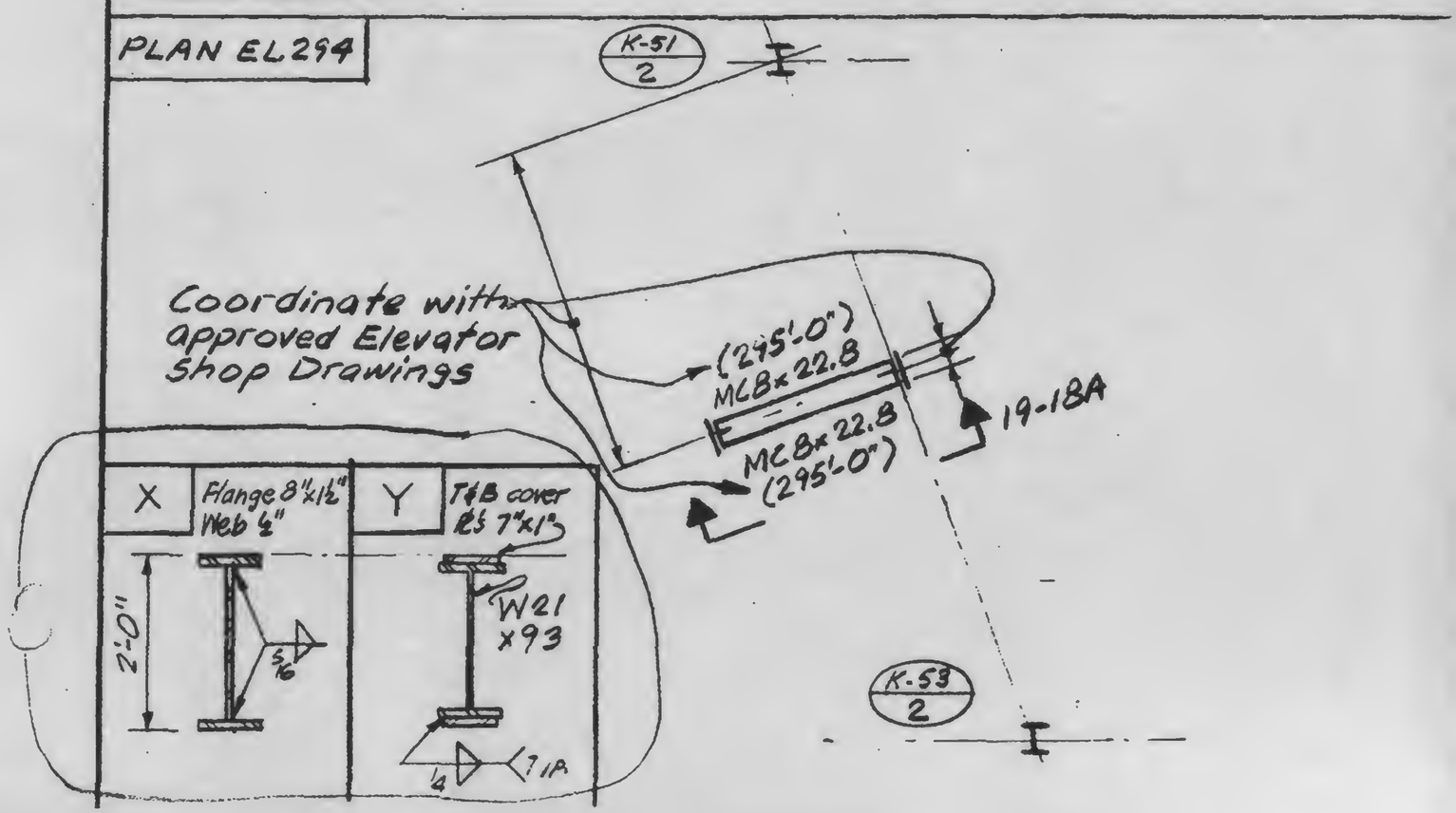

REVISIONS	SKILLING, HELLE, CHRISTIANSEN, ROBERTSON	DRAWING NO.
11-15-79	CONSULTING STRUCTURAL AND CIVIL ENGINEERS	13-K19 18.2
	PROJECT WTC-197B HOTEL SUPPORT REV. — PROJECT NO. 701-283 — BY	
	NEW ELEVATOR SUPPORT-EL. 294 & 310	DATE 4/6/79

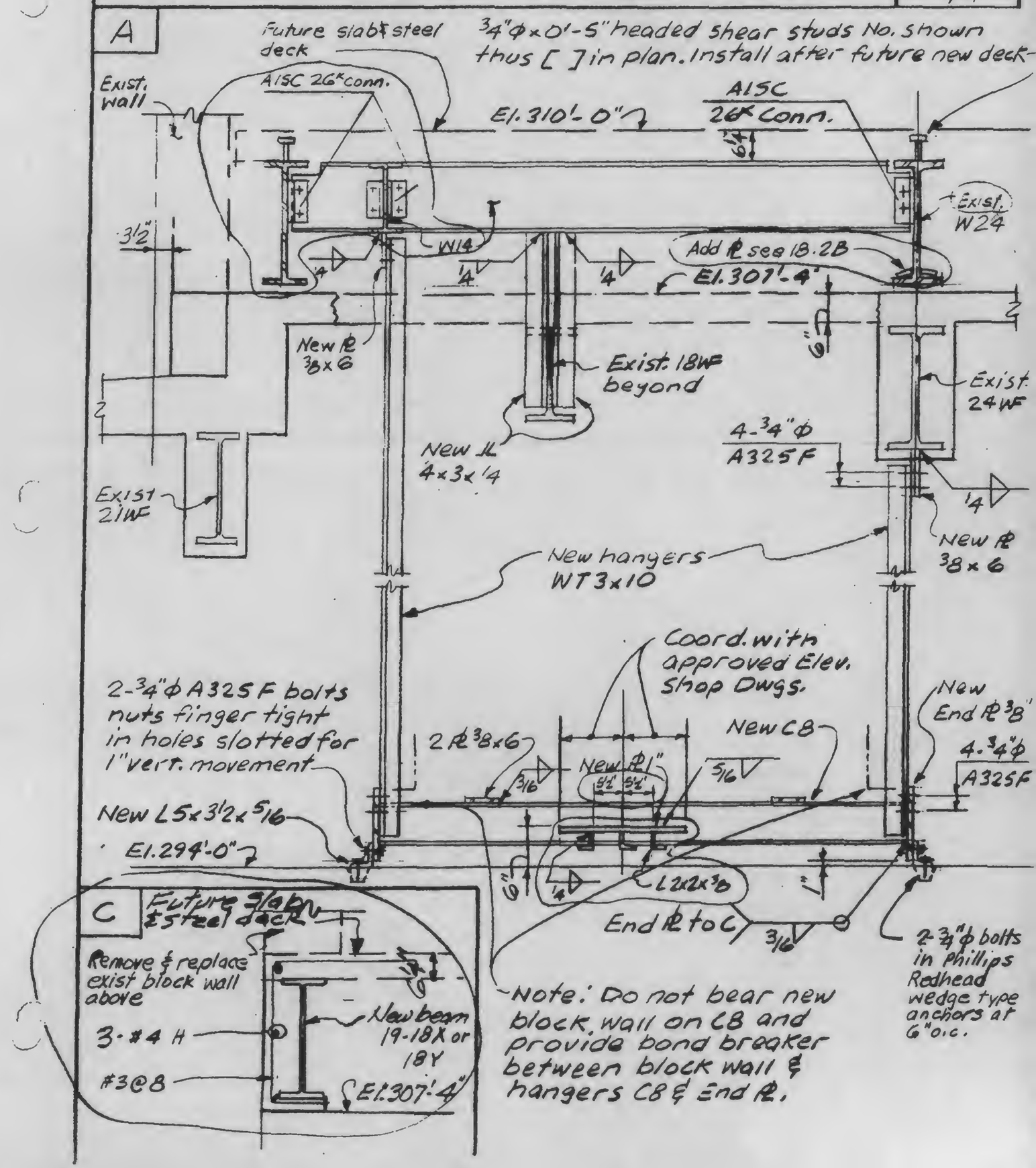

HELLE CHRISTIANSEN ROBERTSON Structural & Civil Engineers	PROJECT WIC - HOICL	DATE 10/17/79	SHEET NO
	ALT. W24x94 13-K19-18.1	PREPARED BY WdB	13-K19 18.2B
		APPROVED	

Rev. 11/15/79

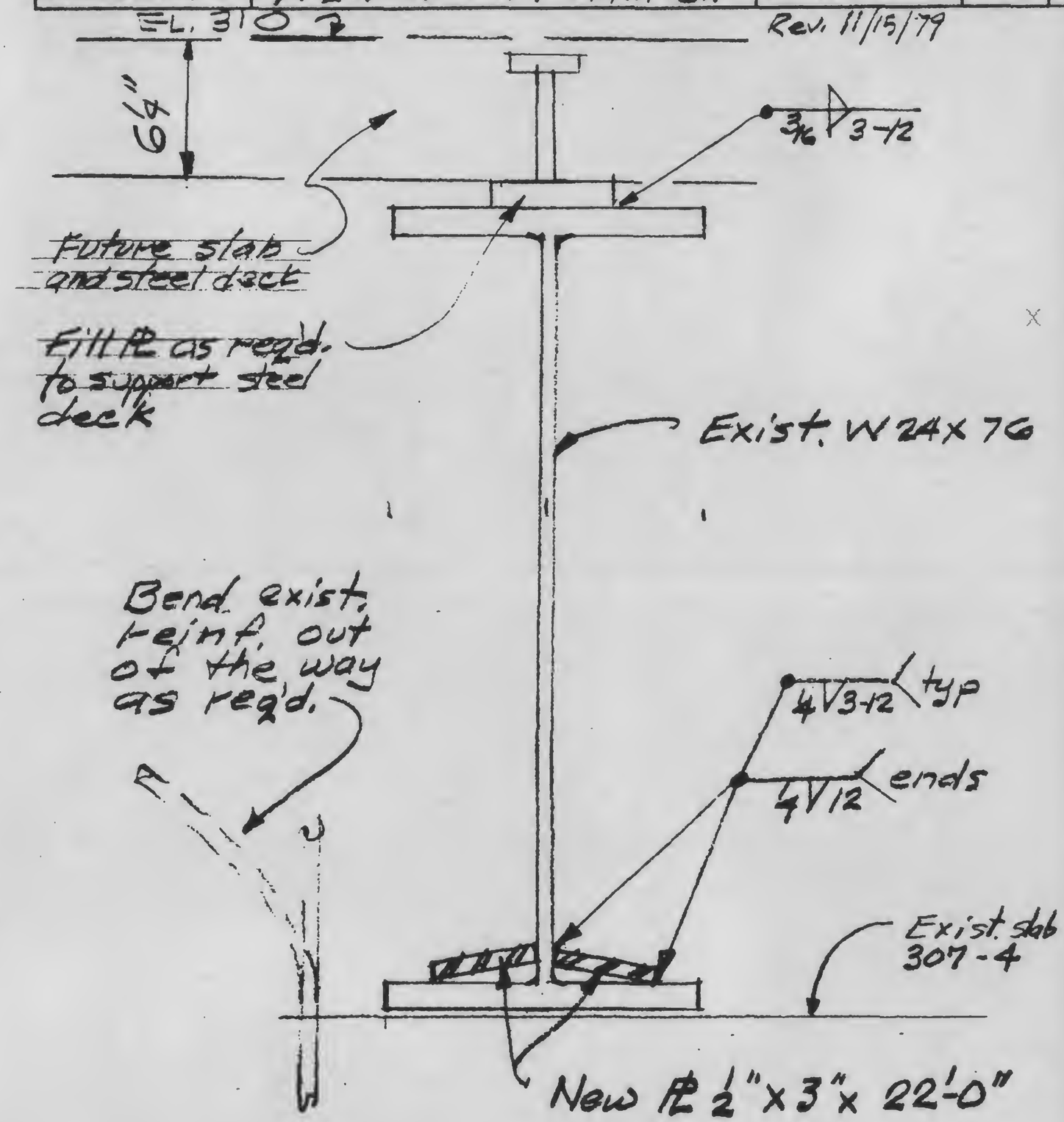

REVISIONS

N PROGRESS 4/23/79

SKILLING, HELLE, CHRISTIANSEN, ROBERTSON CONSULTING STRUCTURAL AND CIVIL ENGINEERS			DRAWING NO 13-K19 -19
PROJECT WTC-1978 HOTEL SUPPORT REV.	PROJECT NO 701.283	BY WAB	
HORIZONTAL ANCHOR-COL. HP-1			DATE 9/7/79

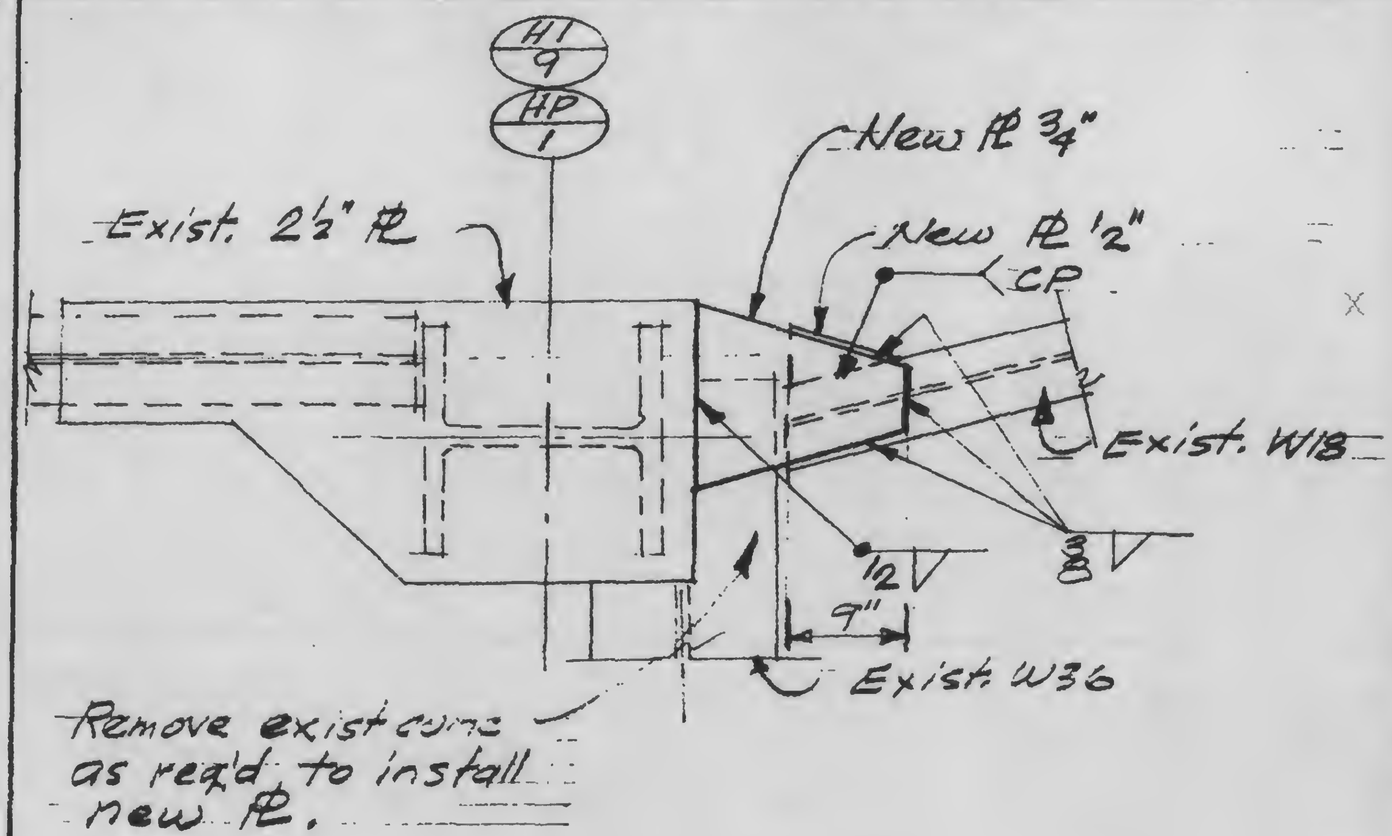

REVISIONS	SKILLING, HELLE, CHRISTIANSEN, ROBERTSON CONSULTING STRUCTURAL AND CIVIL ENGINEERS			DRAWING NO 13-K19 20.1
	PROJECT WTC-1978 HOTEL-SUPPORT REV.	PROJECT NO 701.283	BY WAB	
	ELEVATOR BUFFER BEAMS			DATE 5-31-79

PLAN EL. 294

PART SK-87

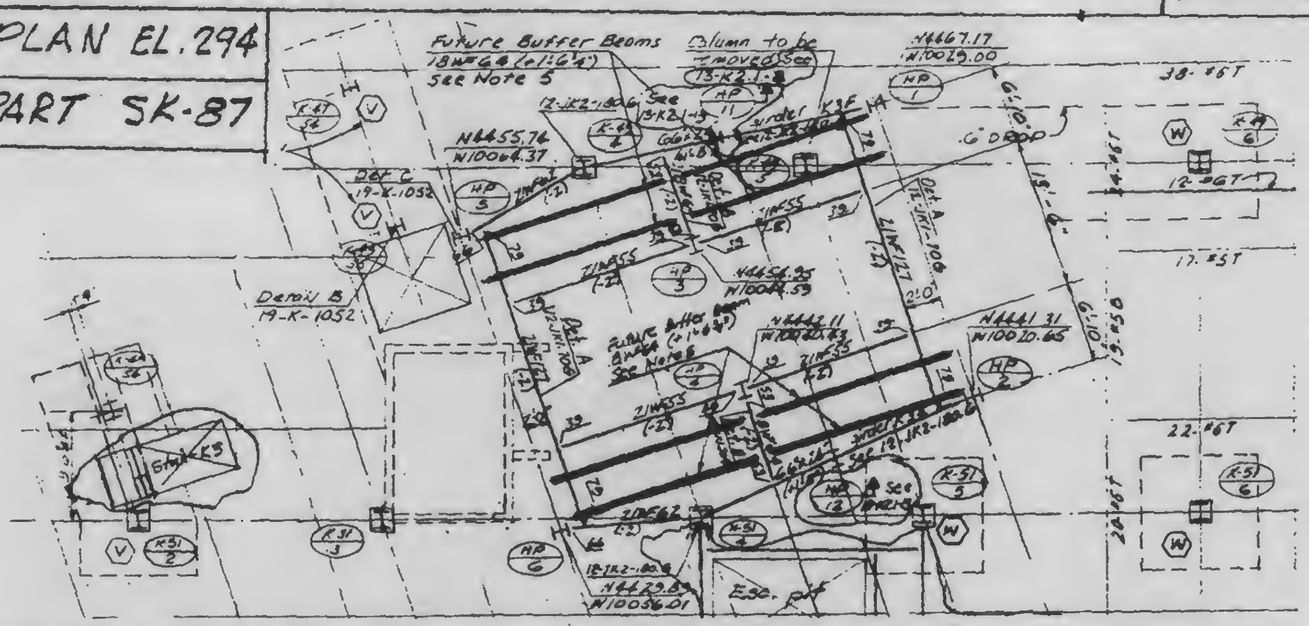
Future Buffer Beams
18WF64 (+1'-6 7/8")
See Note 5
Column to be removed See 13-K2.1-8
N4667.17
W10029.00
N4655.74
W10064.37
Detail C
19-K-1052
Detail B
19-K-1052
Detail A
12-JK1-106
N4454.95
W10044.59
N4442.11
W10020.83
N4441.31
W10010.65
N4429.83
W10056.01
Esc. pit
See 19-K13-4
See 19-K2-1-9
See 19-K2-1-8
See 19-K2-1-8
See 19-K2-1-8

SKILLING, HELLE, CHRISTIANSEN, ROBERTSON
CONSULTING STRUCTURAL AND CIVIL ENGINEERS

PROJECT WTC-1978 HOTEL-SUPPORT REV. | PROJECT NO. 701.283 | BY DAE | DRAWING NO. 13-K19 20.2

ELEVATOR BUFFER BEAMS | DATE 5-31-79

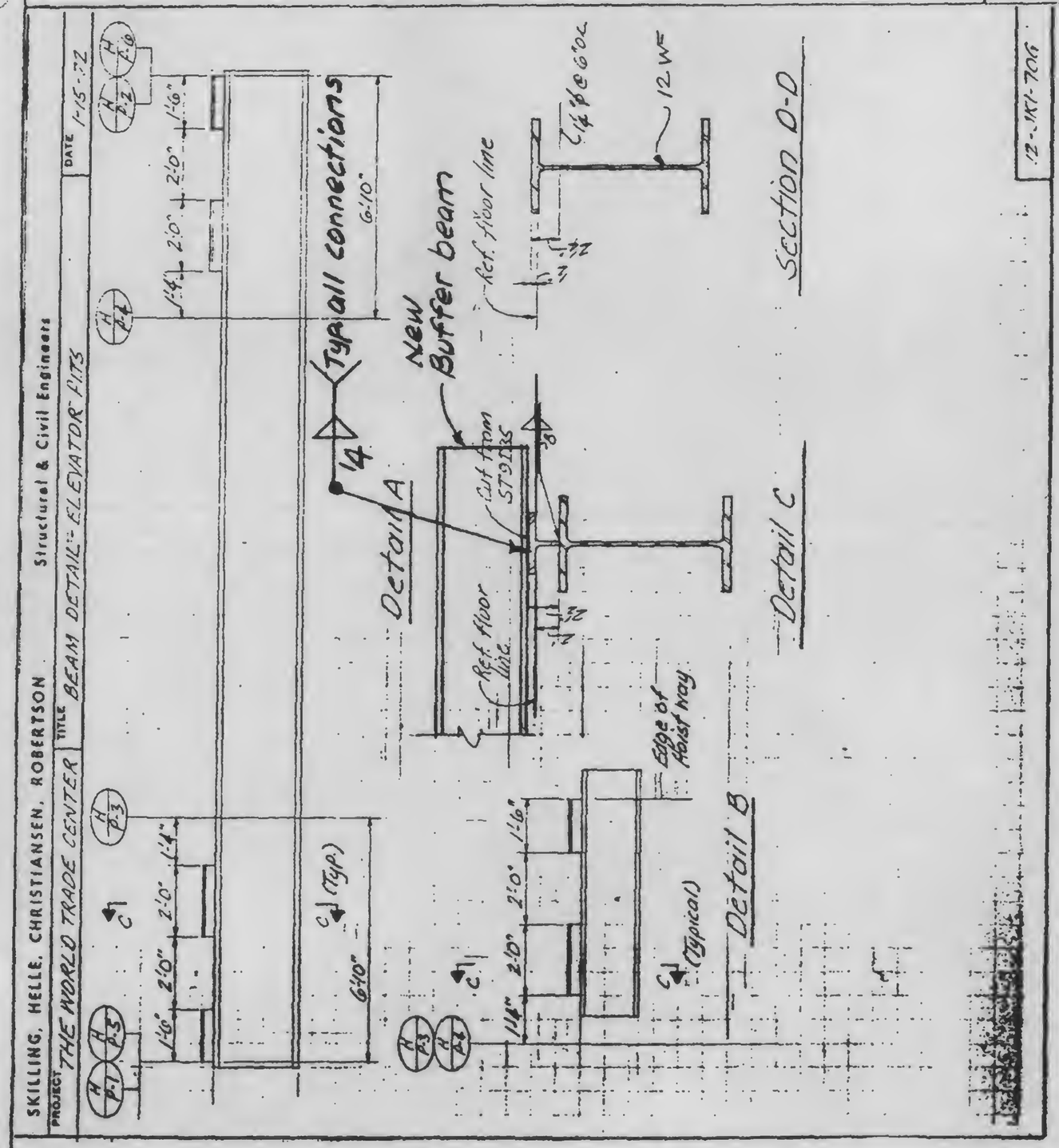

Structural & Civil Engineers
SKILLING, HELLE, CHRISTIANSEN, ROBERTSON
PROJECT THE WORLD TRADE CENTER | TITLE BEAM DETAILS ELEVATOR PITS | DATE 1-15-72

SKILLING, HELLE, CHRISTIANSEN, ROBERTSON
CONSULTING STRUCTURAL AND CIVIL ENGINEERS

PROJECT: WTC-1978 HOTEL-SUPPORT REV.
PROJECT NO: 701-283

DRAWING NO: 13-K19 20.3

ELEVATOR BUFFER BEAMS

DATE: 5-31-79

SKILLING, HELLE, CHRISTIANSEN, ROBERTSON — Structural & Civil Engineers

PROJECT: THE WORLD TRADE CENTER
TITLE: PLACEMENT OF WALL REINF. AT EL. 284
DATE: 1-15-72

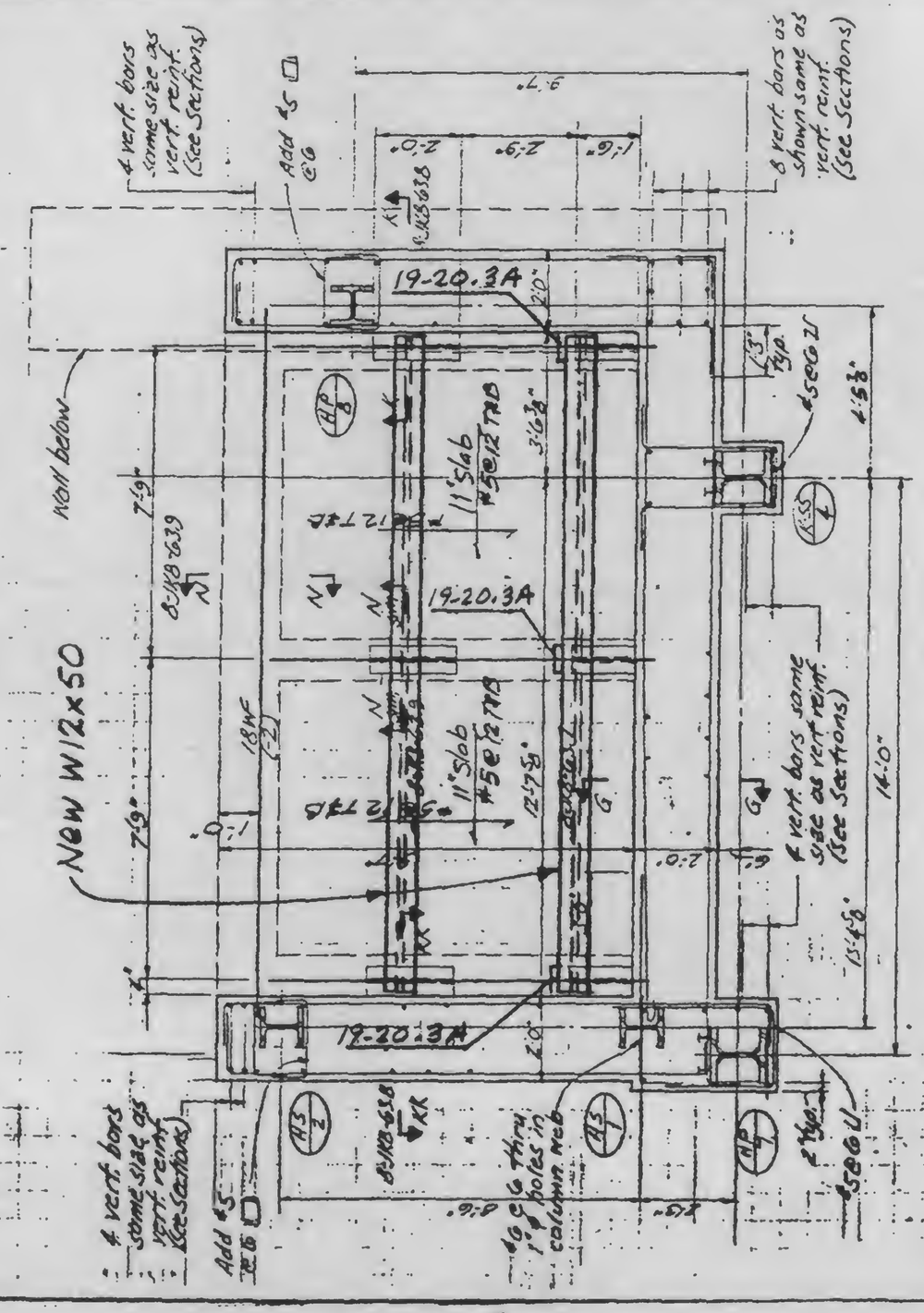

A-JKB-638

A

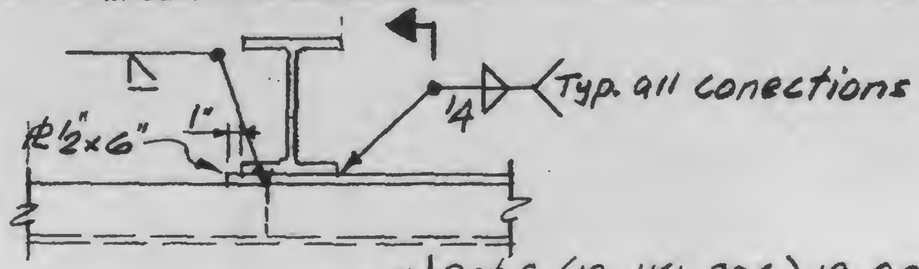

Det. C (12-JK1-706) 19-20.2

SKILLING, HELLE, CHRISTIANSEN, ROBERTSON
CONSULTING STRUCTURAL AND CIVIL ENGINEERS

PROJECT: WTC-1978 HOTEL-SUPPORT REV. | PROJECT NO. 701.283 | BY: WCF | DRAWING NO. 13-K19 20.4

ELEVATOR BUFFER BEAMS | DATE 5-31-79

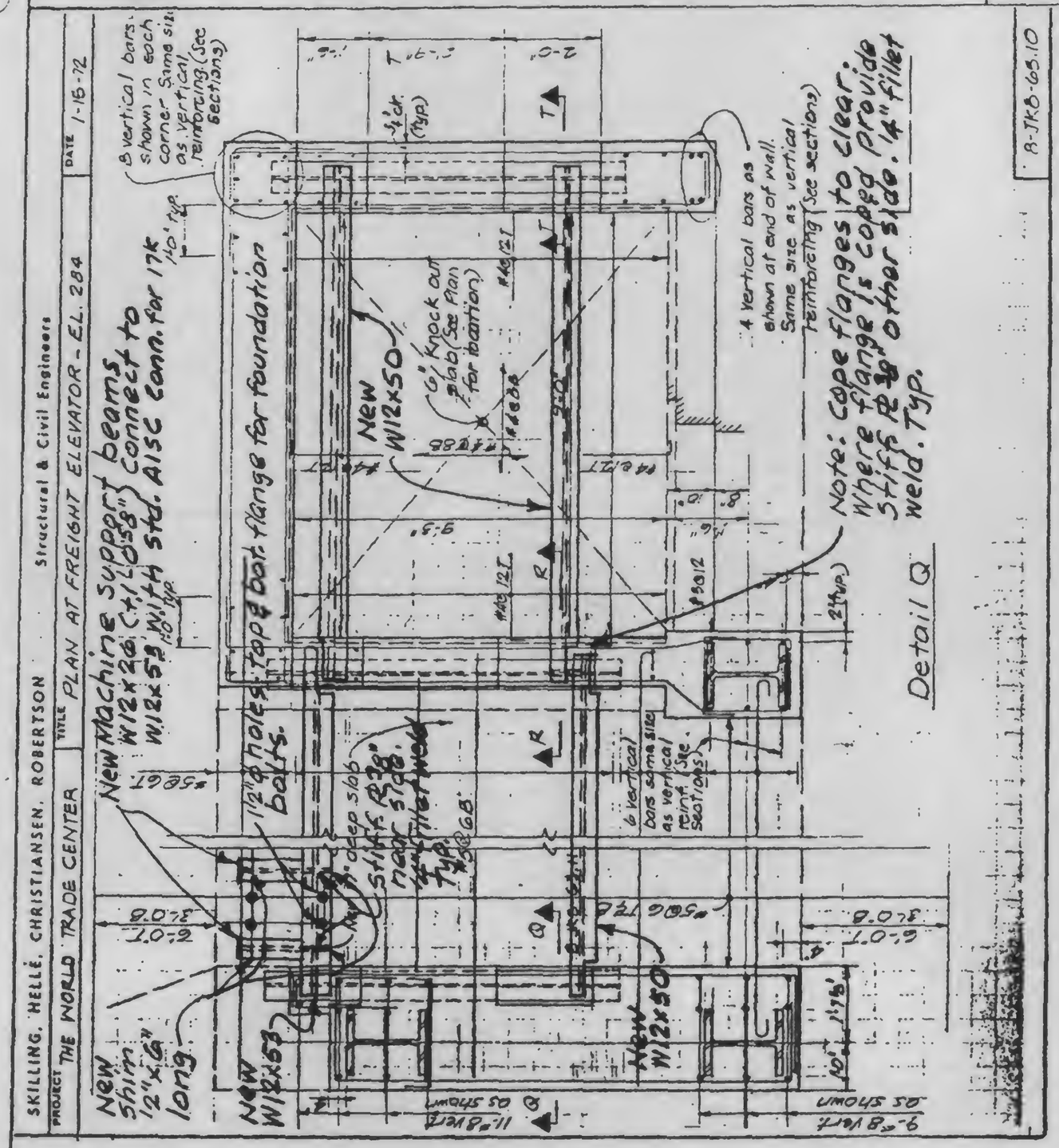

SKILLING, HELLE, CHRISTIANSEN, ROBERTSON
CONSULTING STRUCTURAL AND CIVIL ENGINEERS

DRAWING NO. 13-K19 20.5

PROJECT: WTC-1978 HOTEL-SUPPORT REV. | PROJECT NO. 701.283 | BY W-LB

ELEVATOR BUFFER BEAMS

DATE 5-31-79

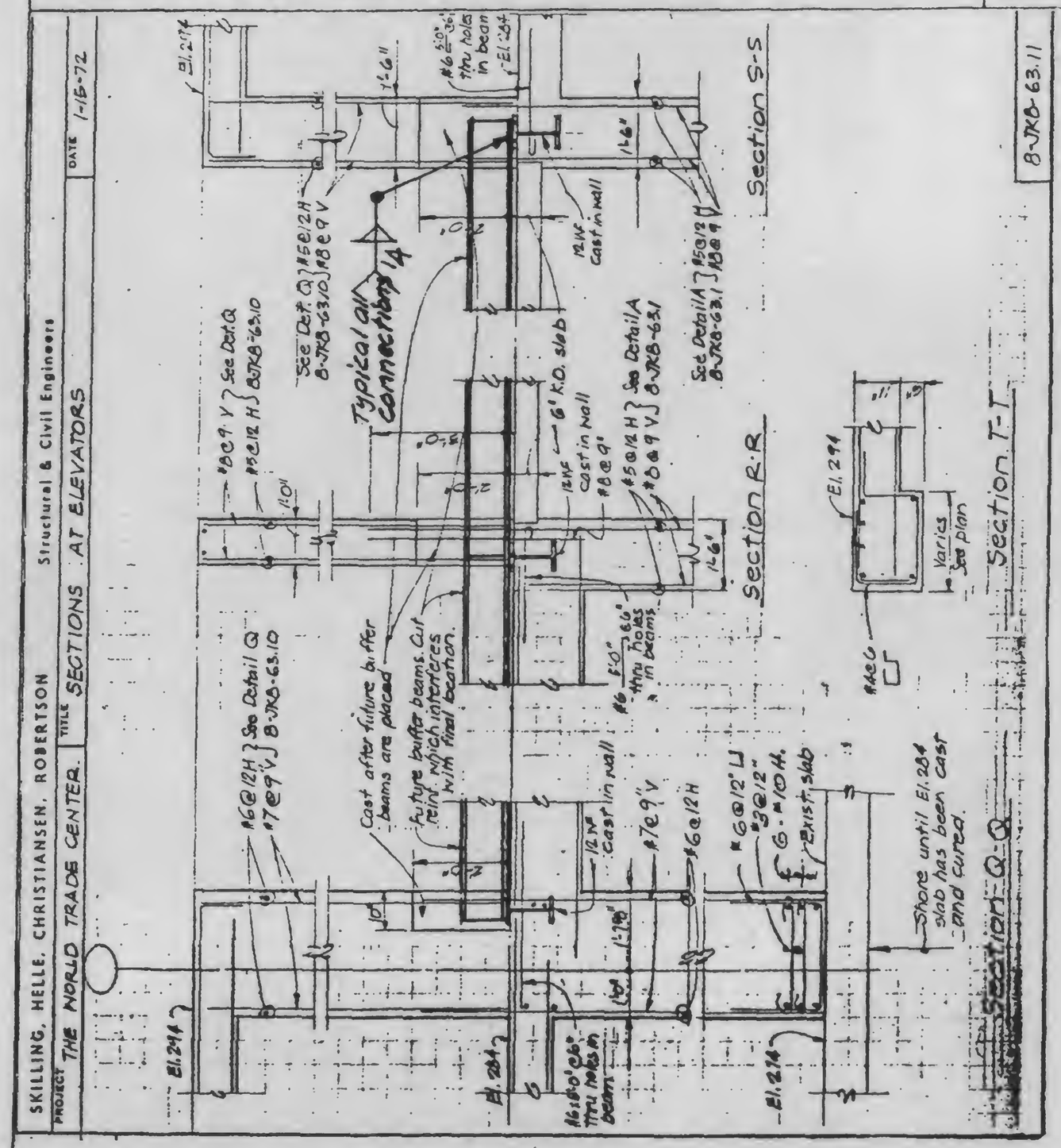

Note: Concrete for placing in wall pockets after installation of buffer beam shall be f'c = 3000 psi stone aggregate non-shrink concrete.

REVISIONS 1/25/80

SKILLING, HELLE, CHRISTIANSEN, ROBERTSON
CONSULTING STRUCTURAL AND CIVIL ENGINEERS

PROJECT WTC-1978 HOTEL-SUPPORT REV. | PROJECT NO. 701-283 | BY WAB

DRAWING NO. 13-K19 21.1

CON.ED-C.I.P. SPLICE CHAMBER

DATE 10/31/79

FRAMING PLAN

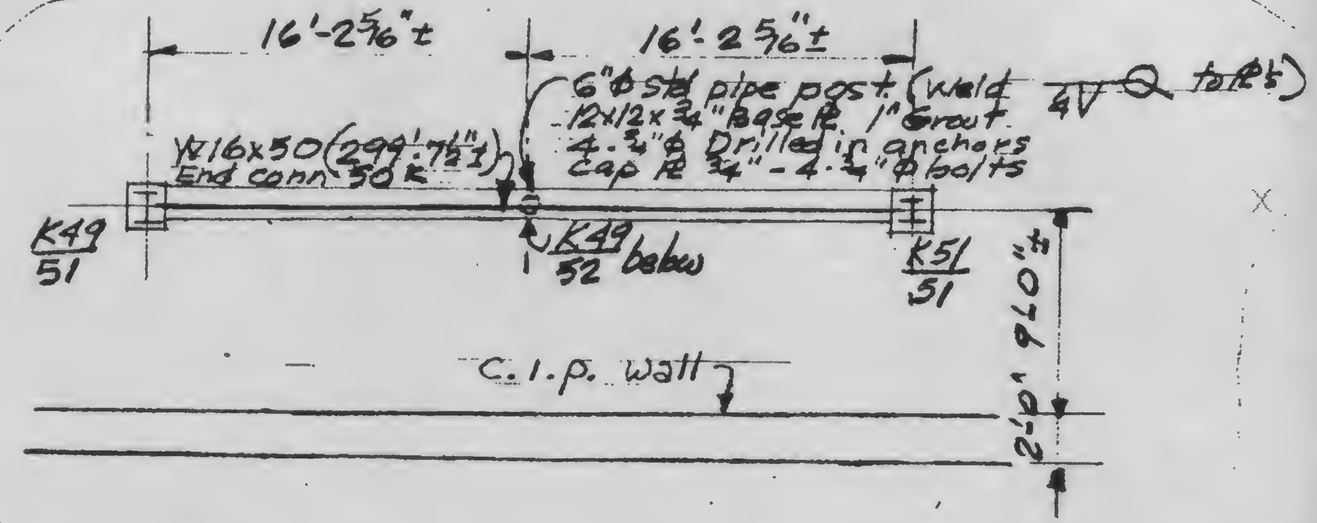

TYPICAL CONDUIT ENCASEMENT DET.

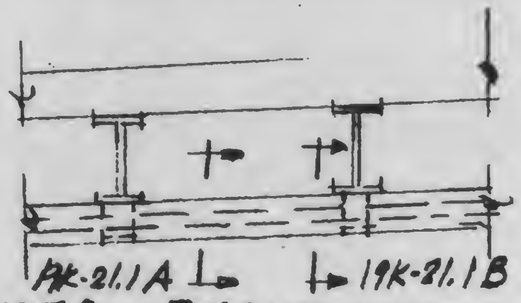

UNDER BEAMS

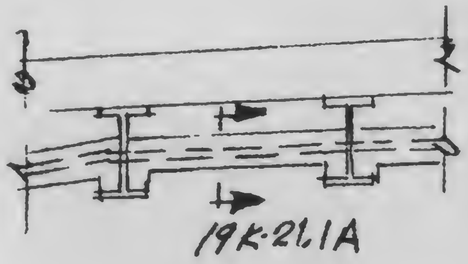

THRU BEAMS

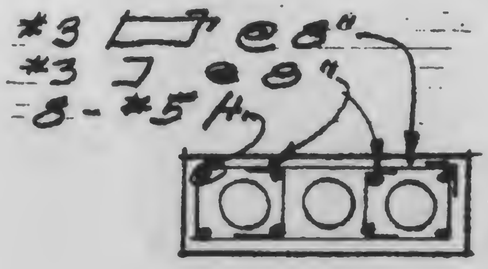

19K-21.1 A

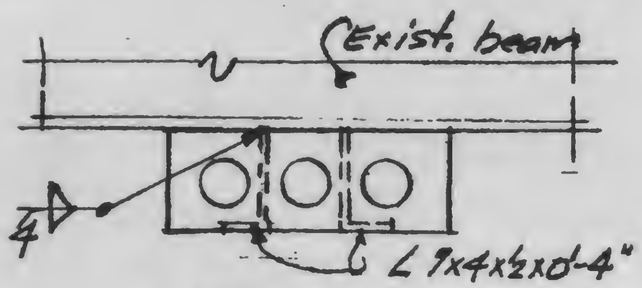

19K-21.1 B

REVISIONS

SKILLING, HELLE, CHRISTIANSEN, ROBERTSON
CONSULTING STRUCTURAL AND CIVIL ENGINEERS

PROJECT	PROJECT NO.	BY	DRAWING NO.
WTC-1978 HOTEL-SUPPORT REV.	701-283	RBE	13-K19 21.2

CON ED - C.I.P. SPLICE CHAMBER

DATE 1/25/80

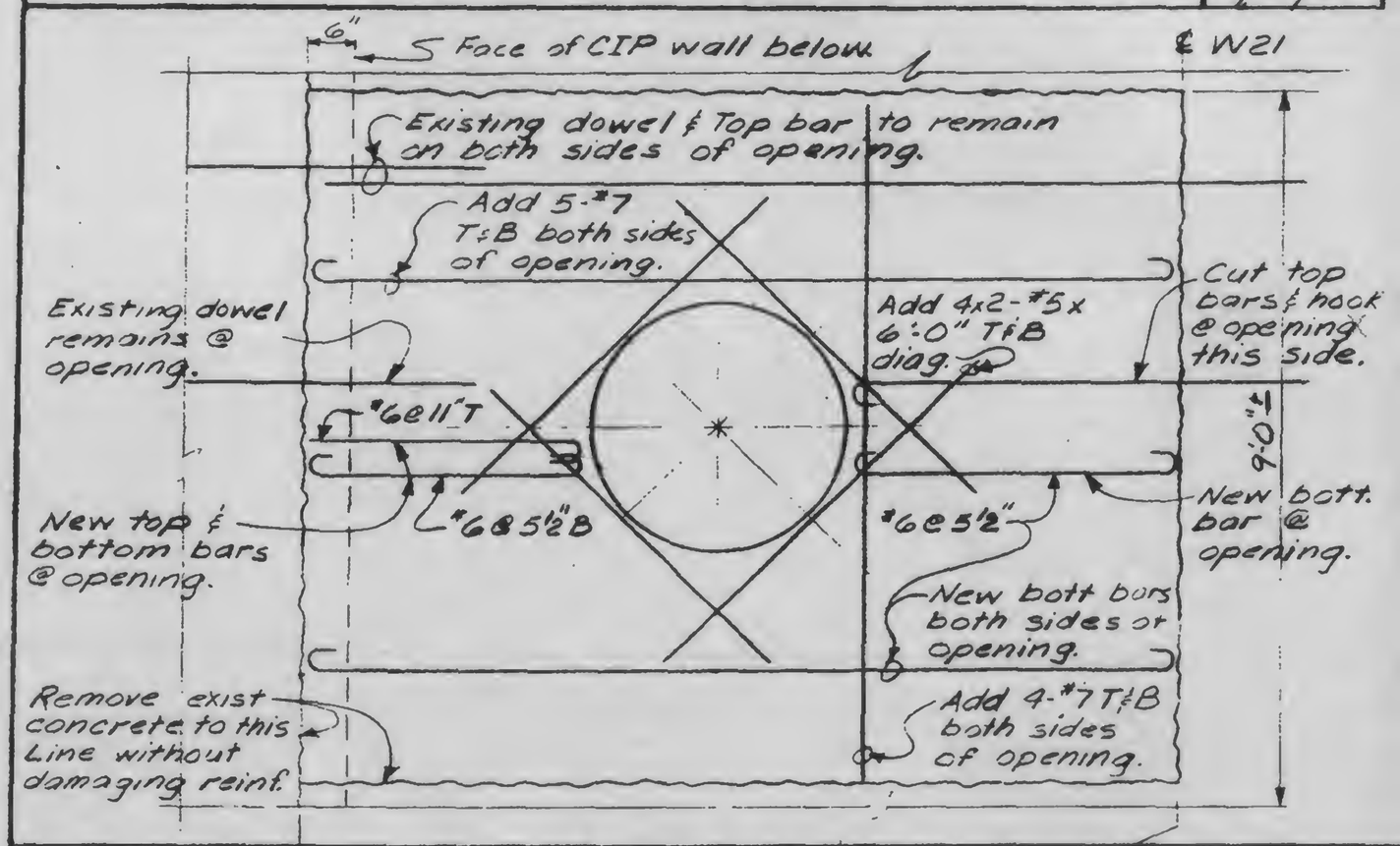

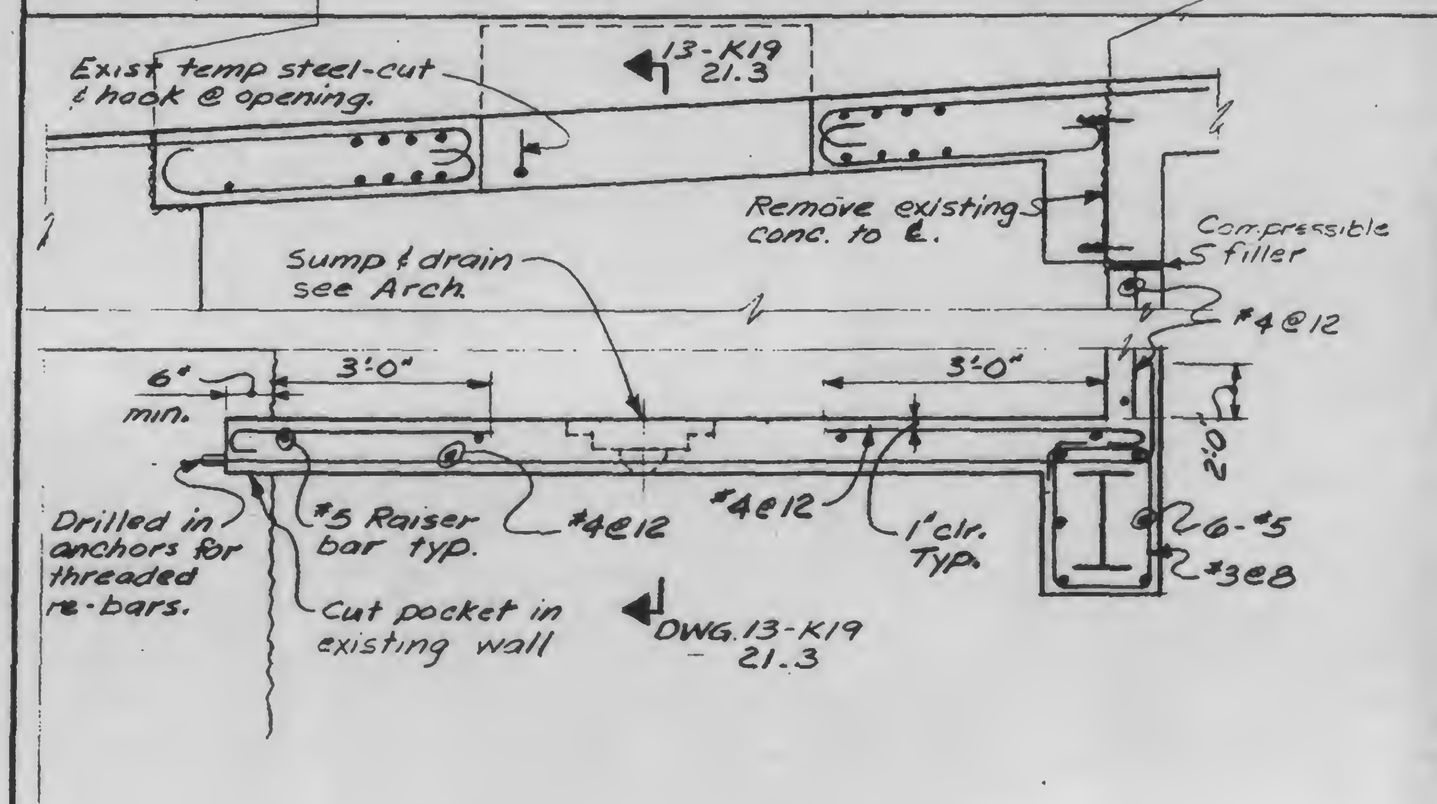

REVISIONS

SKILLING, HELLE, CHRISTIANSEN, ROBERTSON
CONSULTING STRUCTURAL AND CIVIL ENGINEERS

DRAWING NO. 13-K19 21.3

PROJECT WTC - 1978 HOTEL-SUPPORT REV. | PROJECT NO 701-283 | BY RBE

DATE 1/25/80

CON. ED.-C.I.P SPLICE CHAMBER

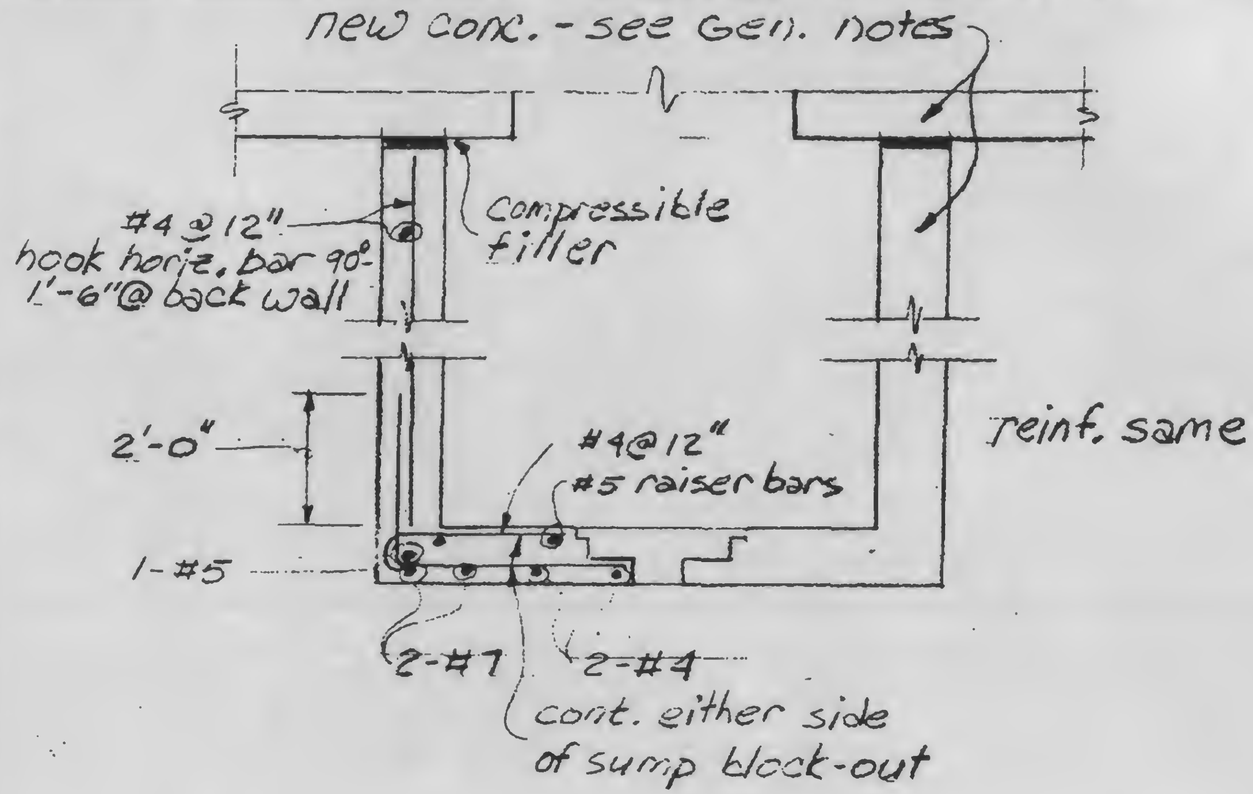

REVISIONS

SKILLING, HELLE, CHRISTIANSEN, ROBERTSON
CONSULTING STRUCTURAL AND CIVIL ENGINEERS

PROJECT WTC-1978 HOTEL SUPPORT REV | PROJECT NO 701.283 | BY WAB

DRAWING NO SKETCH 332-2

DATE 4/23/79

EL.332 SLAB DETAILS

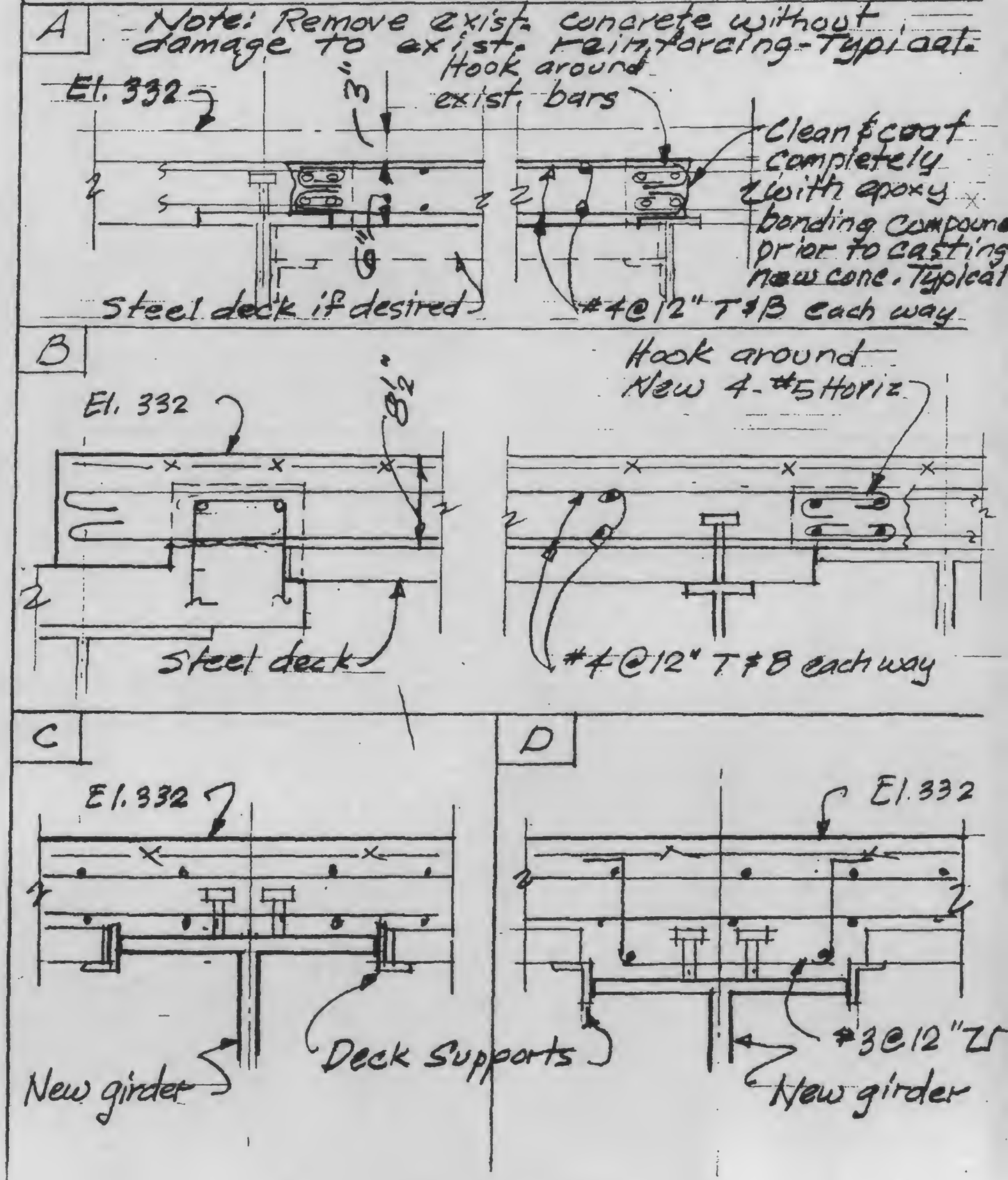

REVISIONS	SKILLING, HELLE, CHRISTIANSEN, ROBERTSON CONSULTING STRUCTURAL AND CIVIL ENGINEERS		DRAWING NO 13-K19 15
	PROJECT WTC-1978 HOTEL-SUPPORT REV.	PROJECT NO 701.283 / BY	
	EL. 294 TRANSFORMER SUPPORTS		DATE 3-12-79

VOID

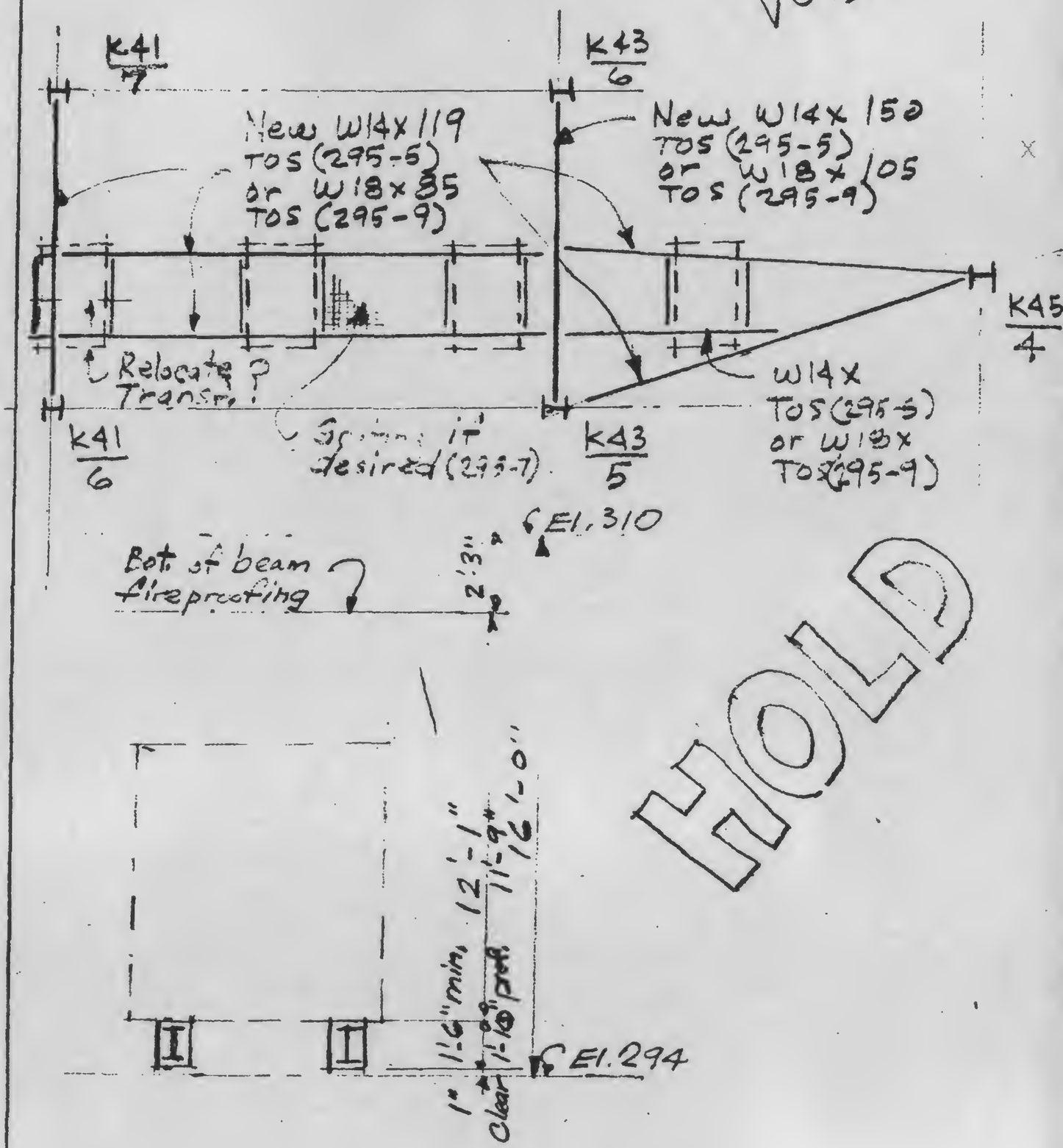

HOLD

REVISIONS	SKILLING, HELLE, CHRISTIANSEN, ROBERTSON CONSULTING STRUCTURAL AND CIVIL ENGINEERS			DRAWING NO 13-K19 16
	PROJECT WTC-1978 HOTEL-SUPPORT-REV.	PROJECT NO 701-283	BY	
	EL. 294 REFRIG. MACHINE SUPPORT			DATE 3-12-79

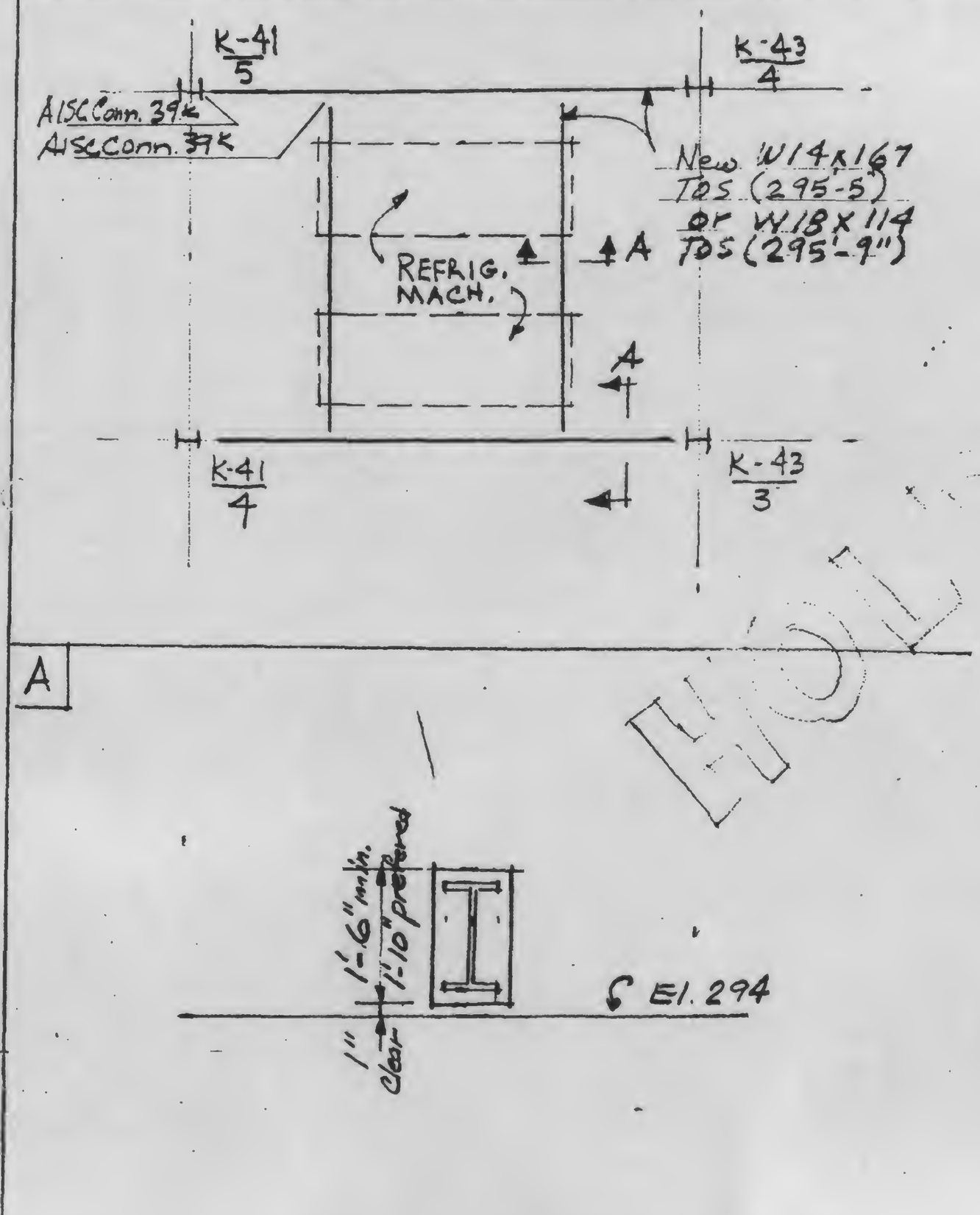

REVISIONS

SKILLING, HELLE, CHRISTIANSEN, ROBERTSON
CONSULTING STRUCTURAL AND CIVIL ENGINEERS

DRAWING NO. 13-K19 21.2

PROJECT WTC-1978 HOTEL-SUPPORT REV. | PROJECT NO. 401-283 | BY WAB

CON ED - P.C. SPLICE CHAMBER SUPPORT

DATE 10/31/79

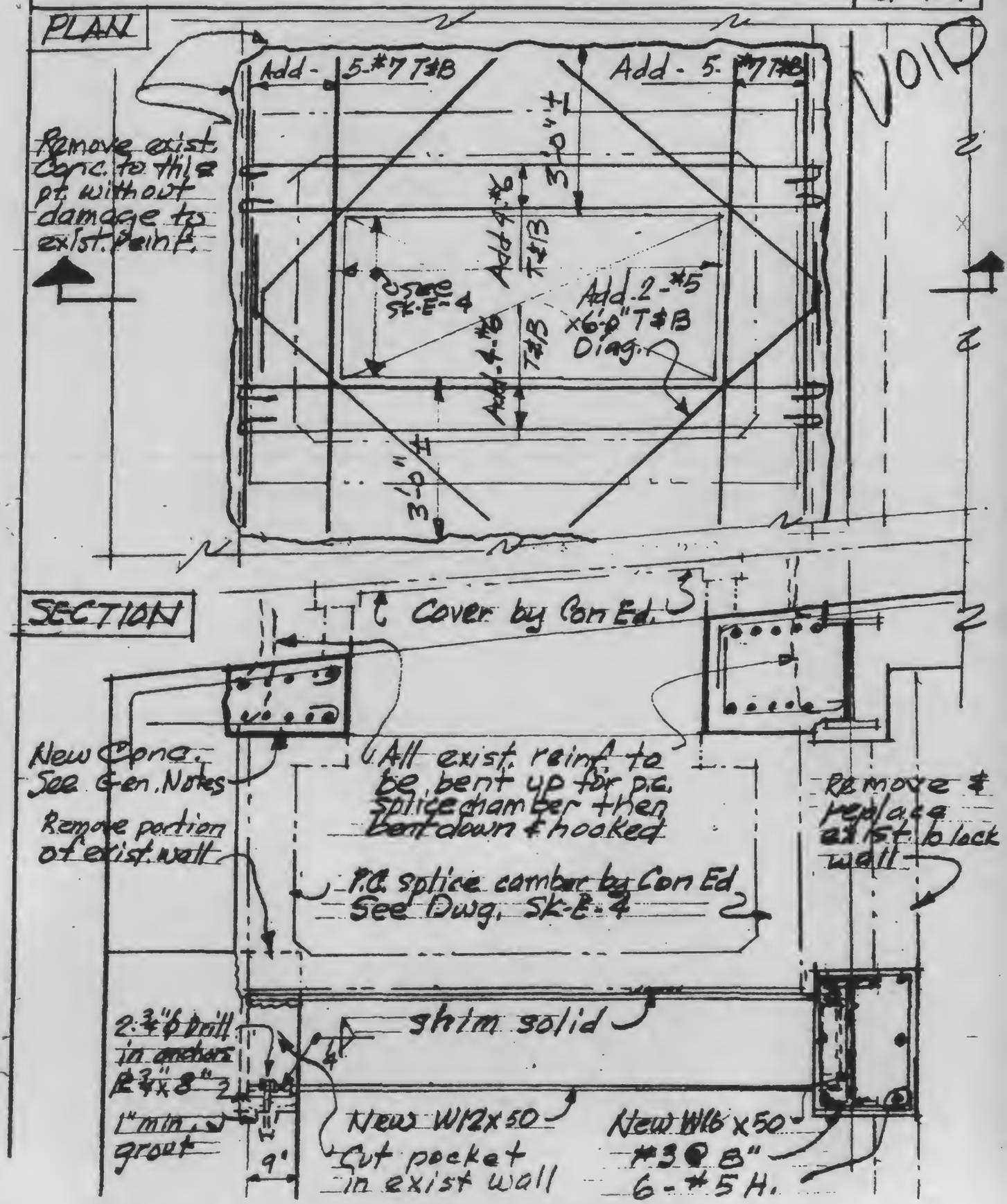

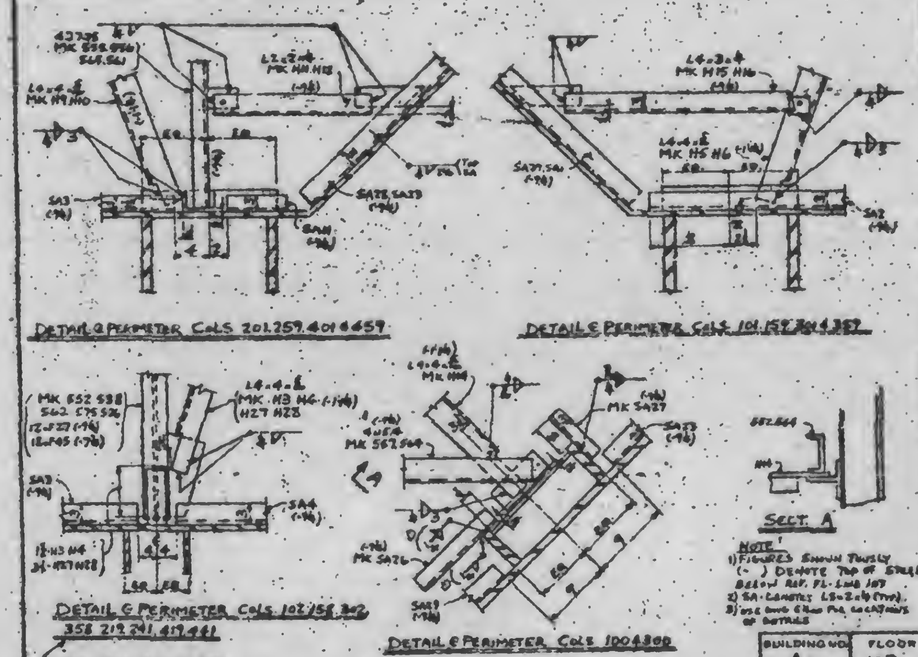

THE WORLD TRADE CENTER

THE PORT OF NEW YORK AUTHORITY

NO.	DATE	BY	DESCRIPTION
1	12/31/70		ADDED NOTE

REVISIONS

PONYA APPROVAL & DATE: James White 12-31-70

PONYA ERECTION CONTRACT WTC 2382

DRAWN BY	DATE
DZ	

CHECKED BY	DATE
ER	11/17/70

BUILDING NO.	FLOOR
A	107

CONNECTION DETAIL NO.: 9-AB7-6 (DETAIL A.I.S.C.)

DWG. NO. FW-1400 (1)

WELDING ELECTRODE SPEC: E70 L H

PREHEAT TYPES NO TEMP

FIELD WELDING DETAILS