WTC
DRAWING BOOK 6
AB 1–0 —AB 1–11

COVER
STOCK
@ 8½ x 11

SKILLING - HELLE - CHRISTIANSEN - ROBERTSON Structural & Civil Engineers

PROJECT THE WORLD TRADE CENTER | TITLE DRAWING BOOK 6 | DATE

REVISIONS

WTCI-20-LERA

6-AB1-
Connection Details 200-399 & 700-799
(See 6-AB1-0 for index)

6-AB2-
Connection Details 100-199 & 400-599
(See 6-AB2-0 for index)

6-AB3-
Horizontal Bracing & Bridging Details
Beam Framed Floors
(See 6-AB3-0 for index)

6-AB4-
Louver Wall Struts
(See 6-AB4-0 for index)

6-AB5-
Vertical Bracing
(See 6-AB5-0 for index)

6-A6- & 6-B6-
Interior Columns to Floor 1
(See 6-AB6-1 for index)

6-AB7-
Anchors to Slabs
(See 6-AB7-0 for index)

FOR TWR A + B
INTERIOR COLUMNS TO FLOOR 1
(NOT IN CORE)

6-AB8-
Perimeter Core Truss Seats & Shear Studs
(See 6-AB8-1 for index)

6-AB9-
Temporary Framing for Elevator 6 & 7
(See 6-AB9-0 for index)

Panel Schedules
Tower B
B1-300 - B1-508

Note: See 6-AB0- for latest date for each page

LICENSED PROFESSIONAL ENGINEER
LESLIE E. ROBERTSON
No. 34360
UNIVERSITY OF THE STATE OF NEW YORK

SKILLING, HELLE, CHRISTIANSEN, ROBERTSON — Structural & Civil Engineers

PROJECT	THE WORLD TRADE CENTER	TITLE	DRAWING BOOK 6 - BEAM CONNECTIONS & MISC. DETAILS	DATE	10/ 6/72

REVISIONS

PRINTED 5/18/73

6-AB0-	0	5/18/73	6-AB1- 15.1	10/ 2/67	6-AB1- 40	12/ 7/67	6-AB1- 56.5	9/18/68	6-AB1- 83	11/10/67
6-AB0-	0.1	5/18/73	6-AB1- 15.2	4/17/68	6-AB1- 40.1	7/28/67	6-AB1- 57	10/ 2/67	6-AB1- 83*	2/26/68
6-AB0-	0.2	5/18/73	6-AB1- 15.3	4/17/68	6-AB1- 41	9/18/68	6-AB1- 58	10/ 5/67	6-AB1- 83.1	11/10/67
6-AB0-	0.3	5/18/73	6-AB1- 16	10/ 5/67	6-AB1- 41.1	9/18/68	6-AB1- 59	5/ 6/68	6-AB1- 83.1*	2/26/68
6-AB0-	0.4	5/18/73	6-AB1- 17	9/15/67	6-AB1- 41.2	2/ 9/68	6-AB1- 59.1	7/28/67	6-AB1- 83.2	2/ 9/68
6-AB0-	0.5	5/18/73	6-AB1- 17.1	10/ 2/67	6-AB1- 41.3	3/11/68	6-AB1- 59.2	7/17/68	6-AB1- 84	10/ 5/67
6-AB1-	0	[illegible]	6-AB1- 17.2	10/ 2/67	6-AB1- 41.4	2/ 9/68	6-AB1- 59.3	[illegible]	6-AB1- 85	7/28/67
6-AB1-	0.1	5/ 1/69	6-AB1- 18	12/21/67	6-AB1- 42	12/21/67	6-AB1- 60	[illegible]	6-AB1- 85.1	7/28/67
6-AB1-	0.2	5/ 1/69	6-AB1- 20	7/28/67	6-AB1- 42.1	12/21/67	6-AB1- 60.1	[illegible]	6-AB1- 86	8/14/67
6-AB1-	0.3	5/ 1/69	6-AB1- 20.1	7/28/67	6-AB1- 43	10/ 5/67	6-AB1- 61	[illegible]	6-AB1- 86.1	8/14/67
6-AB1-	1	7/28/67	6-AB1- 20.2	7/ 5/67	6-AB1- 44	8/14/67	6-AB1- 62	[illegible]	6-AB1- 87	8/14/67
6-AB1-	2	12/21/67	6-AB1- 21	9/15/67	6-AB1- 44.1	8/14/67	6-AB1- 62.1	11/23/67	6-AB1- 88	2/21/68
6-AB1-	2.1	12/21/67	6-AB1- 21.1	11/16/67	6-AB1- 44.2	2/ 9/68	6-AB1- 63	11/23/67	6-AB1- 89	12/ 7/67
6-AB1-	2.2	10/ 5/67	6-AB1- 22	10/ 5/67	6-AB1- 44.3	10/ 2/67	6-AB1- 64	11/23/67	6-AB1- 89.1	8/ 5/67
6-AB1-	2.3	10/ 5/67	6-AB1- 23	10/ 5/67	6-AB1- 44.4	10/ 2/67	6-AB1- 65	10/ 2/67	6-AB1- 90	2/ 9/68
6-AB1-	2.4	9/25/68	6-AB1- 23.1	7/28/67	6-AB1- 44.5	2/ 9/68	6-AB1- 65.1	10/ 2/67	6-AB1- 90.1	7/28/67
6-AB1-	2.5	10/31/67	6-AB1- 24	8/ 5/67	6-AB1- 44.6	2/ 9/68	6-AB1- 65.3	7/28/67	6-AB1- 90.2	7/ 5/67
6-AB1-	2.6	7/14/69	6-AB1- 24.1	10/ 2/67	6-AB1- 44.7	9/18/68	6-AB1- 65.4	4/17/68	6-AB1- 90.3	7/28/67
6-AB1-	5	12/21/67	6-AB1- 25	8/14/67	6-AB1- 44.8	9/18/68	6-AB1- 66	8/ 5/67	6-AB1- 90.4	9/15/67
6-AB1-	5.1	11/10/67	6-AB1- 25.1	10/ 2/67	6-AB1- 45	10/ 2/67	6-AB1- 67	10/31/67	6-AB1- 90.5	7/28/67
6-AB1-	5.2	11/23/67	6-AB1- 25.2	10/ 2/67	6-AB1- 45.1	10/ 2/67	6-AB1- 68	11/23/67	6-AB1- 90.6	5/ 6/68
6-AB1-	5.3	11/10/67	6-AB1- 26	11/20/68	6-AB1- 46	10/ 2/67	6-AB1- 69	10/ 5/67	6-AB1- 90.7	10/ 2/67
6-AB1-	5.4	12/21/67	6-AB1- 26.1	10/ 2/67	6-AB1- 47	10/ 5/67	6-AB1- 70	10/ 2/67	6-AB1- 90.8	10/ 2/67
6-AB1-	6	9/15/67	6-AB1- 27	9/15/67	6-AB1- 48	10/ 5/67	6-AB1- 70.1	2/ 9/68	6-AB1- 90.9	2/ 9/68
6-AB1-	6.1	9/15/67	6-AB1- 27.1	9/15/67	6-AB1- 49	5/ 6/68	6-AB1- 70.2	1/24/68	6-AB1-90.10	12/21/67
6-AB1-	6.2	10/ 5/67	6-AB1- 27.2	2/ 9/68	6-AB1- 49.1	5/ 6/68	6-AB1- 71	11/27/68	6-AB1- 90.11	2/ 9/68
6-AB1-	6.3	9/30/69	6-AB1- 27.3	10/31/67	6-AB1- 50	9/25/68	6-AB1- 72	11/10/67	6-AB1- 91	11/10/67
6-AB1-	7	10/ 5/67	6-AB1- 27.4	11/10/67	6-AB1- 50.1	10/ 2/67	6-AB1- 72.1	11/10/67	6-AB1- 91.1	11/10/67
6-AB1-	7.1	12/21/67	6-AB1- 27.5	9/15/67	6-AB1- 51	11/10/67	6-AB1- 73	11/16/67	6-AB1- 92	11/14/67
6-AB1-	9	10/ 2/67	6-AB1- 27.6	11/10/67	6-AB1- 51.1	10/ 5/67	6-AB1- 74	7/20/67	6-AB1- 92.1	12/21/67
6-AB1-	9.1	7/28/67	6-AB1- 27.7	10/31/67	6-AB1- 51.2	11/23/67	6-AB1- 75	11/10/67	6-AB1- 93	11/10/67
6-AB1-	9.2	7/28/67	6-AB1- 27.8	2/ 9/68	6-AB1- 51.3	11/23/67	6-AB1- 75.1	9/15/67	6-AB1- 93.1	11/10/67
6-AB1-	9.3	10/31/67	6-AB1- 28	10/ 2/67	6-AB1- 52	11/23/67	6-AB1- 76	8/ 5/67	6-AB1- 93.2	12/21/67
6-AB1-	9.4	8/ 5/67	6-AB1- 28.1	10/ 2/67	6-AB1- 52.1	11/23/67	6-AB1- 76.1	8/ 5/67	6-AB1- 94	7/28/67
6-AB1-	9.5	10/31/67	6-AB1- 29	7/28/67	6-AB1- 52.2	1/24/68	6-AB1- 77	8/ 5/67	6-AB1- 94.1	7/28/67
6-AB1-	9.6	10/31/67	6-AB1- 29.1	7/28/67	6-AB1- 53	12/21/67	6-AB1- 77.1	9/18/68	6-AB1- 94.2	8/ 5/67
6-AB1-	9.7	10/31/67	6-AB1- 30	VOID	6-AB1- 53*	12/21/67	6-AB1- 77.2	2/ 9/68	6-AB1- 94.3	1/24/68
6-AB1-	9.8	10/31/67	6-AB1- 31	12/21/67	6-AB1- 53.1	12/21/67	6-AB1- 77.3	9/18/68	6-AB1- 95	10/ 2/67
6-AB1-	9.9	10/ 2/67	6-AB1- 32	11/14/67	6-AB1- 53.1*	12/21/67	6-AB1- 77.4	9/18/68	6-AB1- 96	7/20/67
6-AB1-	9.10	2/ 9/68	6-AB1- 33	5/ 6/68	6-AB1- 53.2	8/ 5/67	6-AB1- 78	2/21/68	6-AB1- 97	10/ 5/67
6-AB1-	11	11/14/67	6-AB1- 33.1	11/21/67	6-AB1- 53.3	9/29/67	6-AB1- 78.1	10/ 2/67	6-AB1- 98	10/ 2/67
6-AB1-	11.1	7/28/67	6-AB1- 34	10/ 5/67	6-AB1- 53.4	1/24/68	6-AB1- 81	11/14/67	6-AB1- 99	11/10/67
6-AB1-	12	1/24/68	6-AB1- 35	11/23/67	6-AB1- 54	10/ 5/67	6-AB1- 81*	10/11/67	6-AB1- 99.1	11/10/67
6-AB1-	13	9/15/67	6-AB1- 36	11/10/67	6-AB1- 55	12/ 7/67	6-AB1- 81*	12/ 7/67	6-AB1- 99.2	11/17/67
6-AB1-	13.1	9/15/67	6-AB1- 36.1	11/10/67	6-AB1- 55.1	11/10/67	6-AB1- 81*	2/26/68	6-AB1- 99.3	10/ 5/67
6-AB1-	13.2	9/15/67	6-AB1- 36.2	11/10/67	6-AB1- 56	9/15/67	6-AB1- 81.1	12/ 7/67		
6-AB1-	13.3	9/15/67	6-AB1- 37	7/20/67	6-AB1- 56.1	8/14/67	6-AB1- 81.1*	10/11/67		
6-AB1-	13.4	10/ 5/67	6-AB1- 38	11/23/67	6-AB1- 56.2	10/ 2/67	6-AB1- 81.1*	2/26/68		
6-AB1-	13.5	10/ 5/67	6-AB1- 39	12/ 7/67	6-AB1- 56.3	9/18/68	6-AB1- 81.2	10/ 5/67		
6-AB1-	15	10/ 2/67	6-AB1- 39.1	9/15/67	6-AB1- 56.4	10/ 2/67	6-AB1- 82	1/24/68		

SKILLING, HELLE, CHRISTIANSEN, ROBERTSON — Structural & Civil Engineers

PROJECT	TITLE	DATE
THE WORLD TRADE CENTER	DRAWING BOOK 6 - BEAM CONNECTIONS & MISC. DETAILS	10/ 6/72

REVISIONS

PRINTED 5/18/73

6-AB1-100	10/ 5/67	6-AB1-120.3	12/21/67	6-AB1-145	2/ 9/68	6-AB1-170	3/11/68	6-AB1-193	8/ 5/67
6-AB1-101	7/28/67	6-AB1-121	10/ 5/67	6-AB1-145.1	2/ 9/68	6-AB1-171	8/ 5/67	6-AB1-194	8/ 5/67
6-AB1-101.1	7/28/67	6-AB1-121.1	10/ 5/67	6-AB1-145.2	7/28/67	6-AB1-171.1	11/10/67	6-AB1-195	7/17/68
6-AB1-101.2	11/14/67	6-AB1-122	7/28/67	6-AB1-145.4	7/28/67	6-AB1-171.2	8/ 5/67	6-AB1-196	8/ 5/67
6-AB1-101.3	11/14/67	6-AB1-122.1	7/28/67	6-AB1-146	6/30/67	6-AB1-171.3	11/10/67	6-AB1-197	8/ 5/67
6-AB1-102	10/ 2/67	6-AB1-123	11/10/67	6-AB1-147	7/20/67	6-AB1-171.4	2/ 9/68	6-AB1-198	7/17/68
6-AB1-102.1	12/21/67	6-AB1-123.1	9/15/67	6-AB1-148	7/20/67	6-AB1-171.5	2/ 9/68	6-AB1-198.1	7/17/68
6-AB1-103	12/21/67	6-AB1-124	10/ 2/67	6-AB1-149	10/ 5/67	6-AB1-171.6	2/ 9/68	6-AB1-198.2	7/17/68
6-AB1-103.1	10/ 5/67	6-AB1-124.1	11/10/67	6-AB1-150	7/28/67	6-AB1-171.7	2/ 9/68	6-AB1-198.3	2/ 9/68
6-AB1-103.2	12/21/67	6-AB1-125	10/ 2/67	6-AB1-151	11/10/67	6-AB1-172	7/28/67	6-AB1-198.4	2/ 9/68
6-AB1-104	7/20/67	6-AB1-127	10/ 2/67	6-AB1-151.1	11/10/67	6-AB1-173	12/ 7/67	6-AB1-199	9/15/67
6-AB1-105	VOID	6-AB1-127.1	3/29/68	6-AB1-152	1/24/68	6-AB1-173.1	11/10/67		
6-AB1-106	7/20/67	6-AB1-128	11/10/67	6-AB1-152.1	12/21/67	6-AB1-174	VOID		
6-AB1-107	7/20/67	6-AB1-128.1	11/10/67	6-AB1-153	10/ 5/67	6-AB1-174.1	VOID		
6-AB1-108	9/15/67	6-AB1-129	11/10/67	6-AB1-154	11/14/67	6-AB1-175	11/10/67		
6-AB1-108.1	9/15/67	6-AB1-129.1	11/10/67	6-AB1-154.1	7/28/67	6-AB1-175.1	11/10/67		
6-AB1-108.2	1/24/68	6-AB1-129.2	1/24/68	6-AB1-154.2	10/ 5/67	6-AB1-176	10/ 2/67		
6-AB1-109	10/ 5/67	6-AB1-130	7/28/67	6-AB1-155	7/28/67	6-AB1-177	2/ 9/68		
6-AB1-110	11/10/67	6-AB1-131	11/10/67	6-AB1-155.1	7/28/67	6-AB1-177.1	8/ 5/67		
6-AB1-110*	12/ 8/67	6-AB1-131.1	11/10/67	6-AB1-155.2	2/ 9/68	6-AB1-177.2	2/ 9/68		
6-AB1-110.1	9/15/67	6-AB1-131.2	10/ 5/67	6-AB1-156	7/28/67	6-AB1-177.3	10/ 5/67		
6-AB1-110.2	1/24/68	6-AB1-132	7/28/67	6-AB1-156.1	7/28/67	6-AB1-177.4	2/ 9/68		
6-AB1-111	11/14/67	6-AB1-133	7/28/67	6-AB1-156.2	2/ 9/68	6-AB1-178	11/10/67		
6-AB1-111.1	11/10/67	6-AB1-134	7/20/67	6-AB1-156.3	3/11/68	6-AB1-178.1	11/10/67		
6-AB1-112	7/20/67	6-AB1-135	12/21/67	6-AB1-157	7/28/67	6-AB1-179	11/14/67		
6-AB1-113	11/10/67	6-AB1-136	6/30/67	6-AB1-157.1	7/ 5/67	6-AB1-179.1	11/14/67		
6-AB1-113.1	11/10/67	6-AB1-136.1	7/28/67	6-AB1-157.2	7/17/68	6-AB1-180	11/10/67		
6-AB1-113.2	11/10/67	6-AB1-137	10/ 2/67	6-AB1-157.3	7/28/67	6-AB1-180.1	11/10/67		
6-AB1-114	7/28/67	6-AB1-137.1	10/ 2/67	6-AB1-157.4	7/17/68	6-AB1-181	10/ 5/67		
6-AB1-114.1	8/ 5/67	6-AB1-138	7/28/67	6-AB1-158	11/10/67	6-AB1-181.1	10/ 5/67		
6-AB1-114.2	11/10/67	6-AB1-139	11/16/67	6-AB1-159	7/28/67	6-AB1-182	12/21/67		
6-AB1-114.3	11/10/67	6-AB1-140	VOID	6-AB1-159.1	7/28/67	6-AB1-183	8/14/67		
6-AB1-114.4	12/21/67	6-AB1-141	5/ 6/68	6-AB1-160	7/28/67	6-AB1-184	8/14/67		
6-AB1-115	11/10/67	6-AB1-141.1	11/10/67	6-AB1-160.1	7/28/67	6-AB1-184.1	9/29/67		
6-AB1-115.1	9/15/67	6-AB1-141.2	2/ 9/68	6-AB1-161	7/28/67	6-AB1-185	8/14/67		
6-AB1-116	9/15/67	6-AB1-142	10/ 2/67	6-AB1-161.1	7/28/67	6-AB1-186	8/14/67		
6-AB1-116.1	9/15/67	6-AB1-142.1	10/ 2/67	6-AB1-161.2	10/31/67	6-AB1-187	9/29/67		
6-AB1-117	7/28/67	6-AB1-142.2	11/17/67	6-AB1-162	8/ 5/67	6-AB1-188	11/23/67		
6-AB1-117.1	12/21/67	6-AB1-142.3	8/14/67	6-AB1-162.1	8/ 5/67	6-AB1-188.1	11/23/67		
6-AB1-117.2	2/ 9/68	6-AB1-142.4	9/15/67	6-AB1-164	10/ 5/67	6-AB1-188.2	10/ 5/67		
6-AB1-117.2*	12/ 8/67	6-AB1-142.5	11/10/67	6-AB1-164.1	10/ 2/67	6-AB1-189	8/14/67		
6-AB1-117.3	2/ 9/68	6-AB1-142.6	9/15/67	6-AB1-164.2	11/23/67	6-AB1-189.1	11/14/67		
6-AB1-117.4	4/17/68	6-AB1-142.7	11/10/67	6-AB1-165	10/ 2/67	6-AB1-189.2	8/14/67		
6-AB1-118	11/10/67	6-AB1-142.8	10/ 2/67	6-AB1-166	7/28/67	6-AB1-189.3	11/14/67		
6-AB1-118.1	11/10/67	6-AB1-142.9	7/17/68	6-AB1-165.1	10/31/67	6-AB1-189.4	11/14/67		
6-AB1-119	7/28/67	6-AB1-142.10	4/17/68	6-AB1-167	11/10/67	6-AB1-189.5	7/17/68		
6-AB1-119.1	7/28/67	6-AB1-143	7/20/67	6-AB1-167.1	11/10/67	6-AB1-189.6	7/17/68		
6-AB1-120	10/ 5/67	6-AB1-144	7/28/67	6-AB1-168	10/ 2/67	6-AB1-190	11/14/67		
6-AB1-120.1	10/ 5/67	6-AB1-144.1	8/ 5/67	6-AB1-169	10/31/67	6-AB1-191	8/ 5/67		
6-AB1-120.2	11/23/67	6-AB1-144.2	8/ 5/67	6-AB1-169.1	10/ 2/67	6-AB1-192	8/14/67		

LICENSED PROFESSIONAL ENGINEER — LESLIE E. ROBERTSON — No. 34360 — STATE OF NEW YORK

REVISIONS

PRINTER 5/18/73

6-AB1-200	11/10/67	6-AB1-232	6/30/67	6-AB1-307	8/14/67
6-AB1-200.1	11/10/67	6-AB1-233	6/30/67	6-AB1-307.1	8/14/67
6-AB1-200.2	11/10/67	6-AB1-234	6/30/67	6-AB1-308	8/14/67
6-AB1-202	11/10/67	6-AB1-235	2/ 9/68	6-AB1-308.1	8/14/67
6-AB1-202.1	11/10/67	6-AB1-235.1	2/ 9/68	6-AB1-309	8/14/67
6-AB1-202.2	2/ 9/68	6-AB1-236	2/ 9/68	6-AB1-309.1	8/14/67
6-AB1-202.3	1/24/68	6-AB1-237	8/14/67	6-AB1-309.2	8/14/67
6-AB1-203	9/29/67	6-AB1-238	2/ 9/68	6-AB1-309.3	8/14/67
6-AB1-204	9/29/67	6-AB1-239	8/14/67	6-AB1-310	8/14/67
6-AB1-205	10/ 2/67	6-AB1-240	7/17/68	6-AB1-310.1	8/14/67
6-AB1-205.1	10/ 5/67	6-AB1-241	7/17/68	6-AB1-310.2	8/14/67
6-AB1-205.2	9/27/68	6-AB1-242	2/ 9/68	6-AB1-310.3	8/14/67
6-AB1-206	10/ 5/67	6-AB1-243	2/ 9/68	6-AB1-311	8/14/67
6-AB1-206.1	2/ 9/68	6-AB1-244	7/17/68	6-AB1-311.1	8/14/67
6-AB1-206.2	2/ 9/68	6-AB1-245	8/14/67	6-AB1-312	9/29/67
6-AB1-207	6/30/67	6-AB1-246	8/14/67	6-AB1-312.1	9/29/67
6-AB1-208	6/30/67	6-AB1-247	8/14/67	6-AB1-313	8/14/67
6-AB1-208.1	2/ 9/68	6-AB1-248	8/14/67	6-AB1-314	1/10/69
6-AB1-209	6/30/67	6-AB1-249	2/ 9/68	6-AB1-315	1/10/69
6-AB1-209.1	3/11/68	6-AB1-249.1	2/ 9/68	6-AB1-500*	12/ 8/67
6-AB1-209.2	2/ 9/68	6-AB1-250	2/ 9/68		
6-AB1-210	6/30/67	6-AB1-251	8/14/67		
6-AB1-211	6/30/67	6-AB1-252	8/14/67		
6-AB1-211*	11/17/67	6-AB1-253	8/14/67		
6-AB1-211.1	2/ 9/68	6-AB1-254	8/14/67		
6-AB1-212	6/30/67	6-AB1-255	8/14/67		
6-AB1-213	6/30/67	6-AB1-256	8/14/67		
6-AB1-213*	11/17/67	6-AB1-257	8/14/67		
6-AB1-214	6/30/67	6-AB1-258	8/14/67		
6-AB1-215	2/ 9/68	6-AB1-259	3/11/68		
6-AB1-215.1	2/ 9/68	6-AB1-259.1	3/11/68		
6-AB1-216	6/30/67	6-AB1-260	2/ 9/68		
6-AB1-216.1	2/ 9/68	6-AB1-261	2/ 9/68		
6-AB1-217	6/30/67	6-AB1-262	2/ 9/68		
6-AB1-217.1	2/ 9/68	6-AB1-263	2/ 9/68		
6-AB1-218	7/17/68	6-AB1-264	2/ 9/68		
6-AB1-219	10/ 7/68	6-AB1-266	2/ 9/68		
6-AB1-220	6/30/67	6-AB1-267	2/ 9/68		
6-AB1-220.1	6/30/67	6-AB1-268	2/ 9/68		
6-AB1-221	6/30/67	6-AB1-269	2/ 9/68		
6-AB1-222	6/30/67	6-AB1-270	2/ 9/68		
6-AB1-223	6/30/67	6-AB1-271	2/ 9/68		
6-AB1-224	6/30/67	6-AB1-272	2/ 9/68		
6-AB1-225	10/ 7/68	6-AB1-301	7/17/68		
6-AB1-226	6/30/67	6-AB1-302	11/16/67		
6-AB1-227	6/30/67	6-AB1-303	7/17/68		
6-AB1-228	6/30/67	6-AB1-304	11/16/67		
6-AB1-229	2/ 9/68	6-AB1-305	8/ 5/67		
6-AB1-230	2/ 9/68	6-AB1-306	8/14/67		
6-AB1-231	6/30/67	6-AB1-306.1	8/14/67		

SKILLING, HELLE, CHRISTIANSEN, ROBERTSON — Structural & Civil Engineers

PROJECT	THE WORLD TRADE CENTER	TITLE	DRAWING BOOK 6- BEAM CONNECTIONS &MISC. DETAILS	DATE	10/ 6/72

REVISIONS

PRINTED 5/18/73

6-AB2-	1	5/ 1/69	6-AB2-	37	3/29/68	6-AB2-	90.1	10/ 5/67	6-AB2-140	7/20/67	6-AB3- 4	8/29/68
6-AB2-	1.1	5/ 1/69	6-AB2-	38	1/24/68	6-AB2-	90.2	12/21/67	6-AB2-142	7/20/67	6-AB3- 5	8/29/68
6-AB2-	2	2/ 9/68	6-AB2-	39	3/29/68	6-AB2-	91	11/17/67	6-AB2-142.1	7/20/67	6-AB3- 6	8/29/68
6-AB2-	2.1	8/14/67	6-AB2-	40	1/24/68	6-AB2-	91.1	11/17/67	6-AB2-143	7/20/67	6-AB3- 7	12/20/67
6-AB2-	2.2	2/ 9/68	6-AB2-	40.1	3/29/68	6-AB2-	92	8/ 5/67	6-AB2-144	11/10/67	6-AB3- 8	8/29/68
6-AB2-	3	8/14/67	6-AB2-	41	3/11/68	6-AB2-	101	8/ 5/67	6-AB2-145	9/29/67	6-AB3- 9	8/29/68
6-AB2-	3.1	2/ 9/68	6-AB2-	42	3/29/68	6-AB2-	102	1/10/69	6-AB2-147	8/ 5/67	6-AB3- 10	8/29/68
6-AB2-	3.2	8/14/67	6-AB2-	43	3/29/68	6-AB2-	103	5/ 7/68	6-AB2-148	8/ 5/67	6-AB3- 11	12/20/67
6-AB2-	4	8/14/67	6-AB2-	44	2/21/68	6-AB2-	104	10/ 2/67	6-AB2-150	8/ 5/67	6-AB3- 11.1	8/29/68
6-AB2-	5	2/ 9/68	6-AB2-	45	2/21/68	6-AB2-	105	1/24/68	6-AB2-151	10/ 5/67	6-AB3- 12	8/29/68
6-AB2-	7	10/ 2/67	6-AB2-	46	2/21/68	6-AB2-	106	1/24/68	6-AB2-152	10/ 2/67	6-AB3- 13	8/29/68
6-AB2-	7.1	9/18/67	6-AB2-	47	2/21/68	6-AB2-	107	2/21/68	6-AB2-152.1	8/ 5/67	6-AB3- 14	8/29/68
6-AB2-	7.2	9/15/67	6-AB2-	52	11/21/67	6-AB2-	107.1	10/ 9/68	6-AB2-153	8/14/67	6-AB3- 15	8/29/68
6-AB2-	7.2*	12/21/67	6-AB2-	53	11/21/67	6-AB2-	107.2	9/25/68	6-AB2-153.1	8/14/67	6-AB3- 16	8/29/68
6-AB2-	7.3	9/18/67	6-AB2-	54	11/21/67	6-AB2-	107.3	9/25/68	6-AB2-154	10/ 2/67	6-AB3- 17	8/29/68
6-AB2-	7.4	11/10/67	6-AB2-	55	8/29/68	6-AB2-	107.4	9/25/68	6-AB2-155	8/ 5/67	6-AB3- 18	8/29/68
6-AB2-	7.4*	12/13/67	6-AB2-	56	8/29/68	6-AB2-	108	8/14/67	6-AB2-156	8/ 5/67	6-AB3- 19	8/29/68
6-AB2-	7.5	11/10/67	6-AB2-	57	11/21/67	6-AB2-	109	12/21/67	6-AB2-156*	11/17/67	6-AB3- 20	8/29/68
6-AB2-	7.5*	12/21/67	6-AB2-	58	12/21/67	6-AB2-	110	VOID	6-AB2-157	2/ 9/68	6-AB3- 20.1	8/29/68
6-AB2-	7.6	10/ 5/67	6-AB2-	59	8/17/68	6-AB2-	111	11/10/67	6-AB2-158	5/ 7/68	6-AB3- 21	8/29/68
6-AB2-	8	10/31/67	6-AB2-	60	11/21/67	6-AB2-	111.1	11/10/67	6-AB2-160	8/14/67	6-AB3- 22	8/29/68
6-AB2-	8.1	11/10/67	6-AB2-	61	11/21/67	6-AB2-	111.2	11/10/67	6-AB2-162	2/ 9/68	6-AB3- 23	8/29/68
6-AB2-	8.2	10/ 2/67	6-AB2-	62	11/21/67	6-AB2-	112	VOID	6-AB2-163	8/14/67	6-AB3- 24	8/29/68
6-AB2-	8.3	10/31/67	6-AB2-	73	8/14/67	6-AB2-	113	1/24/68	6-AB2-164	10/ 5/67	6-AB3- 25	8/29/68
6-AB2-	8.4	10/ 2/67	6-AB2-	73.1	8/ 5/67	6-AB2-	114	8/14/67	6-AB2-165	8/ 5/67	6-AB3- 30	12/20/67
6-AB2-	9	2/ 9/68	6-AB2-	73.2	8/14/67	6-AB2-	114.1	2/ 9/68	6-AB2-166	8/ 5/67	6-AB3- 31	12/20/67
6-AB2-	10	2/ 9/68	6-AB2-	73.5	10/ 5/67	6-AB2-	116	11/22/68	6-AB2-167	8/ 5/67	6-AB3- 32	12/20/67
6-AB2-	11	2/ 9/68	6-AB2-	74	11/17/67	6-AB2-	117	2/21/68	6-AB2-168	9/29/67	6-AB3- 33	1/24/68
6-AB2-	11.1	2/ 9/68	6-AB2-	75	1/24/68	6-AB2-	118	12/21/67	6-AB2-169	8/14/67	6-AB3- 34	8/17/68
6-AB2-	12	2/ 9/68	6-AB2-	75.1	1/24/68	6-AB2-	119	VOID	6-AB2-170	8/14/67	6-AB3- 35	8/17/68
6-AB2-	13	7/28/67	6-AB2-	76	9/15/67	6-AB2-	120	10/ 5/67	6-AB2-171	8/14/67	6-AB3- 36	8/17/68
6-AB2-	13.1	1/24/68	6-AB2-	77	8/ 5/67	6-AB2-	121	11/10/67	6-AB2-172	8/14/67	6-AB3- 37	1/10/69
6-AB2-	13.2	9/15/67	6-AB2-	77.1	8/14/67	6-AB2-	122	2/21/68	6-AB2-173	8/14/67	6-AB3- 38	1/10/69
6-AB2-	13.3	11/16/67	6-AB2-	78	10/ 2/67	6-AB2-	123	10/31/67	6-AB2-174	8/14/67		
6-AB2-	13.3*	12/13/67	6-AB2-	80	10/ 2/67	6-AB2-	123.1	7/17/68	6-AB2-175	7/17/68		
6-AB2-	13.4	11/10/67	6-AB2-	80.5	10/ 5/67	6-AB2-	124	10/ 2/67	6-AB2-176	2/21/69	6-AB4- 1	5/ 1/69
6-AB2-	13.4*	12/13/67	6-AB2-	81	9/18/68	6-AB2-	125	8/ 5/67	6-AB2-177	2/ 9/68	6-AB4- 2	12/20/67
6-AB2-	13.5	10/ 5/67	6-AB2-	82	10/ 2/67	6-AB2-	126	11/23/67	6-AB2-178	4/17/68	6-AB4- 3	11/29/68
6-AB2-	13.6	10/31/67	6-AB2-	83	8/ 5/67	6-AB2-	128	11/23/67	6-AB2-179	4/17/68	6-AB4- 4	12/20/67
6-AB2-	13.7	11/16/67	6-AB2-	83.1	7/17/68	6-AB2-	130	9/15/67	6-AB2-180	7/17/68	6-AB4- 5	11/29/68
6-AB2-	14	VOID	6-AB2-	84	10/ 2/67	6-AB2-	131	8/ 5/67	6-AB2-181	1/10/69	6-AB4- 6	11/29/68
6-AB2-	15	1/10/69	6-AB2-	85	10/ 2/67	6-AB2-	132	10/ 5/67	6-AB2-183	7/17/68	6-AB4- 7	12/20/67
6-AB2-	25	11/ 7/67	6-AB2-	85.1	9/25/68	6-AB2-	133	1/24/68	6-AB2-184	11/22/68	6-AB4- 8	11/29/68
6-AB2-	30	12/18/67	6-AB2-	85.2	9/25/68	6-AB2-	134	9/29/67	6-AB2-197	8/29/68	6-AB4- 9	8/29/68
6-AB2-	31	12/18/67	6-AB2-	86	9/15/67	6-AB2-	135	6/30/67	6-AB2-198	10/ 2/67	6-AB4- 10	11/29/68
6-AB2-	32	1/24/68	6-AB2-	86.1	2/12/68	6-AB2-	136	10/ 5/67			6-AB4- 11	12/20/67
6-AB2-	33	1/24/68	6-AB2-	87	10/ 2/67	6-AB2-	137	10/ 5/67			6-AB4- 12	11/29/68
6-AB2-	34	1/24/68	6-AB2-	88	10/ 2/67	6-AB2-	138	9/15/67	6-AB3- 1	5/ 1/69	6-AB4- 13	11/29/68
6-AB2-	35	1/24/68	6-AB2-	89	10/ 2/67	6-AB2-	139	7/20/67	6-AB3- 2	8/29/68	6-AB4- 14	VOID
6-AB2-	36	1/24/68	6-AB2-	90	10/ 5/67	6-AB2-	139.1	7/20/67	6-AB3- 3	8/29/68	6-AB4- 15	VOID

LICENSED PROFESSIONAL ENGINEER — LESLIE E. ROBERTSON — No. 34500 — THE STATE OF NEW YORK

6-A50-0.3

SKILLING, HELLE, CHRISTIANSEN, ROBERTSON — Structural & Civil Engineers

PROJECT: THE WORLD TRADE CENTER | TITLE: DRAWING BOOK 6- BEAM CONNECTIONS & MISC. DETAILS | DATE: 11/26/71

REVISIONS

PRINTED 5/18/73

6-AB4- 16	VOID	6-AB5- 30.1	12/14/67	6-AB5- 67	9/29/67	6- B5-110	2/ 9/68
6-AB4- 17	VOID	6-AB5- 31	12/14/67	6-AB5- 68	9/15/67	6- B5-111	2/ 9/68
6-AB4- 18	12/20/67	6-AB5- 31.1	12/14/67	6-AB5- 69	10/ 4/67	6- B5-112	3/11/68
6-AB4- 19	12/20/67	6-AB5- 32	12/14/67	6-AB5- 70	9/15/67	6- B5-113	3/11/68
6-AB4- 20	8/29/68	6-AB5- 32.1	12/14/67	6-AB5- 71	10/31/67		
6-AB4- 21	8/29/68	6-AB5- 33	12/14/67	6-AB5- 72	10/ 4/67	6-AB6- 1	5/ 1/69
6-AB4- 22	12/20/67	6-AB5- 34	10/31/67	6-AB5- 73	10/ 4/67	6-A6 - 2	6/12/67
6-AB4- 23	12/20/67	6-AB5- 35	9/29/67	6-AB5- 74	9/29/67	6-A6 - 3	6/12/67
6-AB4- 24	12/20/67	6-AB5- 36	9/29/67	6-AB5- 75	9/29/67	6-A6 - 4	6/12/67
		6-AB5- 37	9/15/67	6-AB5- 76	10/31/67	6-B6 - 5	2/12/68
		6-AB5- 38	12/14/67	6-AB5- 77	10/31/67	6-B6 - 6	2/12/68
6-AB5- 1	5/ 1/69	6-AB5- 39	12/14/67	6-AB5- 77.1	10/31/67	6-B6 - 7	2/12/68
6-AB5- 2	9/29/67	6-AB5- 40	12/14/67	6-AB5- 78	10/31/67	6-B6 - 8	3/11/68
6-AB5- 3	3/13/68	6-AB5- 40.1	9/15/67	6-AB5- 79	10/31/67		
6-AB5- 3.1	3/13/68	6-AB5- 41	9/15/67	6-AB5- 79.1	10/31/67		
6-AB5- 4	3/13/68	6-AB5- 42	9/15/67	6-AB5- 79.2	10/31/67	6-AB7- 1	5/ 1/69
6-AB5- 5	3/13/68	6-AB5- 43	9/29/67	6-AB5- 80	10/31/67	6-AB7- 2	8/ 5/67
6-AB5- 6	8/14/67	6-AB5- 44	10/31/67	6-AB5- 81	9/29/67	6-AB7- 2.1	8/ 5/67
6-AB5- 6.1	3/13/68	6-AB5- 45	9/29/67	6-AB5- 82	10/31/67	6-AB7- 2.2	9/15/67
6-AB5- 7	8/14/67	6-AB5- 46	9/15/67	6-AB5- 83	10/31/67	6-AB7- 2.3	9/15/67
6-AB5- 7.1	3/13/68	6-AB5- 47	9/29/67	6-AB5- 83.1	10/31/67	6-AB7- 2.4	9/27/68
6-AB5- 7.2	3/13/68	6-AB5- 48	9/15/67	6-AB5- 83.2	10/31/67	6-AB7- 2.5	11/24/67
6-AB5- 7.3	3/13/68	6-AB5- 49	9/15/67	6-AB5- 84	10/31/67	6-AB7- 2.6	1/24/68
6-AB5- 8	8/14/67	6-AB5- 49.1	9/15/67	6-AB5- 85	12/21/67	6-AB7- 2.7	1/24/68
6-AB5- 9	8/14/67	6-AB5- 50	9/15/67	6-AB5- 86	10/31/67	6-AB7- 2.8	2/21/68
6-AB5- 10	3/13/68	6-AB5- 50.1	9/15/67	6-AB5- 86.1	10/31/67	6-AB7- 2.9	2/21/68
6-AB5- 10.2	8/14/67	6-AB5- 50.2	9/15/67	6-AB5- 87	9/29/67	6-AB7- 2.10	7/17/68
6-AB5- 10.3	8/14/67	6-AB5- 51	10/31/67	6-AB5- 88	9/29/67	6-AB7- 2.11	9/27/68
6-AB5- 10.4	8/14/67	6-AB5- 51.1	9/29/67	6-AB5- 89	9/29/67	6-AB7- 3	2/ 9/68
6-AB5- 10.5	8/14/67	6-AB5- 52	9/15/67	6-AB5- 90	9/29/67	6-AB7- 4	2/ 9/68
6-AB5- 10.6	2/ 9/68	6-AB5- 53	9/15/67	6-AB5- 91	9/29/67	6-AB7- 5	5/ 7/68
6-AB5- 10.7	2/ 9/68	6-AB5- 53.1	9/15/67	6-AB5- 92	9/29/67	6-AB7 5.1	2/ 9/68
6-AB5- 10.8	2/ 9/68	6-AB5- 54	10/31/67	6-AB5- 93	9/29/67	6-AB7 5.2	2/ 9/68
6-AB5- 10.9	3/13/68	6-AB5- 55	9/29/67	6-AB5- 94	9/29/67	6-AB7- 6	5/ 7/68
6-AB5- 10.10	3/13/68	6-AB5- 55.1	10/31/67	6-AB5- 95	8/14/67	6-AB7- 7	12/21/67
6-AB5- 11	8/14/67	6-AB5- 55.2	9/29/67	6-AB5- 96	1/24/68	6-AB7- 8	12/21/67
6-AB5- 11.1	3/13/68	6-AB5- 56	9/15/67	6-AB5- 97	1/24/68	6-AB7- 9	12/21/67
6-AB5- 11.2	3/13/68	6-AB5- 57	10/31/67	6-AB5- 97.1	1/24/68		
6-AB5- 11.3	3/13/68	6-AB5- 57.1	10/31/67	6-AB5- 98	2/21/68		
6-AB5- 11.4	3/13/68	6-AB5- 58	10/31/67	6-AB5- 99	2/21/68		
6-AB5- 12	8/14/67	6-AB5- 59	9/15/67	6-AB5-100	2/21/68		
6-AB5- 13	9/29/67	6-AB5- 59.1	9/15/67	6-AB5-101	2/21/68		
6-AB5- 13.1	8/14/67	6-AB5- 60	10/31/67	6-AB5-102	11/17/67		
6-AB5- 14	8/14/67	6-AB5- 61	9/29/67	6- B5-103	3/11/68		
6-AB5- 14.1	8/14/67	6-AB5- 62	9/29/67	6- B5-103.1	3/11/68		
6-AB5- 15	8/14/67	6-AB5- 63	10/31/67	6- B5-104	3/11/68		
6-AB5- 16	9/29/67	6-AB5- 64	9/29/67	6- B5-105	3/11/68		
6-AB5- 28	12/14/67	6-AB5- 65	9/15/67	6- B5-105.1	3/11/68		
6-AB5- 29	12/14/67	6-AB5- 65.1	9/15/67	6- B5-106	2/ 9/68		
6-AB5- 30	12/14/67	6-AB5- 66	9/29/67	6- B5-109	2/ 9/68		

LICENSED PROFESSIONAL ENGINEER — LESLIE E. ROBERTSON — No 34960 — STATE OF NEW YORK

6-AB0-0.4

SKILLING, HELLE, CHRISTIANSEN, ROBERTSON — Structural & Civil Engineers

PROJECT	TITLE	DATE
THE WORLD TRADE CENTER	DRAWING BOOK 6- BEAM CONNECTIONS &MISC. DETAILS	10/ 6/72

REVISIONS

PRINTED 5/18/73

6-AB8- 1	5/ 1/69	6-AB8-46	11/22/67
6-AB8- 1.1	5/ 1/69	6-AB8-47	11/22/67
6-AB8- 2	9/18/68	6-AB8-48	11/22/67
6-AB8- 2.1	9/18/68	6-AB8-49	11/22/67
6-AB8- 3	9/18/68	6-AB8-50	11/22/67
6-AB8- 4	11/22/67	6-AB8-50.1	11/22/67
6-AB8- 5	9/18/68	6-AB8-51	11/22/67
6-AB8- 5.1	9/18/68	6-AB8- 52	9/18/68
6-AB8- 6	9/18/68		
6-AB8- 7	11/22/67		
6-AB8- 8	11/22/67	6-AB9- 1	5/ 1/69
6-AB8- 9	11/22/67	6-AB9- 2	1/12/68
6-AB8-10	11/22/67	6-AB9- 3	1/12/68
6-AB8-11	11/22/67	6-AB9- 4	1/12/68
6-AB8-12	11/22/67	6-AB9- 5	1/12/68
6-AB8-13	11/22/67	6-AB9- 6	1/12/68
6-AB8-14	11/22/67	6-AB9- 7	1/12/68
6-AB8-15	3/ 5/68	6-AB9- 8	3/29/68
6-AB8-15.1	11/22/67	6-AB9- 9	3/29/68
6-AB8-16	3/ 5/68		
6-AB8-16.1	11/22/67		
6-AB8-17	11/22/67		
6-AB8-18	11/22/67		
6-AB8-19	11/22/67		
6-AB8-20	11/22/67		
6-AB8-21	11/22/67		
6-AB8-22	11/22/67		
6-AB8-23	11/22/67		
6-AB8-24	11/22/67		
6-AB8-25	11/22/67		
6-AB8-26	11/22/67		
6-AB8-27	11/22/67		
6-AB8-28	11/22/67		
6-AB8-29	11/22/67		
6-AB8-30	11/22/67		
6-AB8-31	11/22/67		
6-AB8-32	11/22/67		
6-AB8-33	11/22/67		
6-AB8-34	11/22/67		
6-AB8-35	11/22/67		
6-AB8-36	11/22/67		
6-AB8-37	11/22/67		
6-AB8-38	11/22/67		
6-AB8-39	11/22/67		
6-AB8-40	11/22/67		
6-AB8-41	11/22/67		
6-AB8-42	11/22/67		
6-AB8-43	11/22/67		
6-AB8-44	11/22/67		
6-AB8-45	11/22/67		

LICENSED PROFESSIONAL ENGINEER
LESLIE E. ROBERTSON
No. 34360
OF THE STATE OF NEW YORK

6-AB0-0.5

SKILLING, HELLE, CHRISTIANSEN, ROBERTSON — **Structural & Civil Engineers**

PROJECT: THE WORLD TRADE CENTER

TITLE: CONNECTION DETAILS - INDEX

DATE: 4/ 1/69

REVISIONS

Printed 5-1-69

6-AB1- 0	INDEX	
6-AB1- 1	GENERAL NOTES	
6-AB1- 2	DETAIL	2D1
6-AB1- 2.1	DETAIL	2D1
6-AB1- 2.2	DETAIL	201
6-AB1- 2.3	DETAIL	201
6-AB1- 2.4	DETAIL	201
6-AB1- 2.5	DETAIL	201
6-AB1- 2.6	DETAIL	201
6-AB1- 5	DETAIL	2D2
6-AB1- 5.1	DETAIL	2D2
6-AB1- 5.2	DETAIL	202
6-AB1- 5.3	DETAIL	202
6-AB1- 5.4	DETAIL	202
6-AB1- 6	DETAIL	203
6-AB1- 6.1	DETAIL	203
6-AB1- 6.2	DETAIL	203
6-AB1- 7	DETAIL	2D4
6-AB1- 7.1	DETAIL	204
6-AB1- 9	DETAIL	205
6-AB1- 9.1	DETAIL	205
6-AB1- 9.2	DETAIL	205
6-AB1- 9.3	DETAIL	205
6-AB1- 9.4	DETAIL	2D5
6-AB1- 9.5	DETAIL	205
6-AB1- 9.6	DETAIL	2D5
6-AB1- 9.7	DETAIL	205
6-AB1- 9.8	DETAIL	2D5
6-AB1- 9.9	DETAIL	205
6-AB1- 9.10	DETAIL	205
6-AB1- 11	DETAIL	206
6-AB1- 11.1	DETAIL	2D6
6-AB1- 12	DETAIL	207
6-AB1- 13	DETAIL	20B
6-AB1- 13.1	DETAIL	208
6-AB1- 13.2	DETAIL	2DB
6-AB1- 13.3	DETAIL	2D8
6-AB1- 13.4	DETAIL	2DB
6-AB1- 13.5	DETAIL	208
6-AB1- 15	DETAIL	2D9
6-AB1- 15.1	DETAIL	2D9
6-AB1- 15.2	DETAIL	209
6-AB1- 15.3	DETAIL	209
6-AB1- 16	DETAIL	210
6-AB1- 17	DETAIL	211
6-AB1- 17.1	DETAIL	211
6-AB1- 17.2	DETAIL	211
6-AB1- 18	DETAIL	212
6-AB1- 20	DETAIL	213
6-AB1- 2D.1	DETAIL	213
6-AB1- 2D.2	DETAIL	213
6-AB1- 21	DETAIL	214
6-AB1- 21.1	DETAIL	214
6-AB1- 22	DETAIL	215
6-AB1- 23	DETAIL	216
6-AB1- 23.1	DETAIL	216
6-AB1- 24	DETAIL	217
6-AB1- 24.1	DETAIL	217
6-AB1- 25	DETAIL	21B
6-AB1- 25.1	DETAIL	21B
6-AB1- 25.2	DETAIL	218
6-AB1- 26	DETAIL	219
6-AB1- 26.1	DETAIL	219
6-AB1- 27	DETAIL	220
6-AB1- 27.1	DETAIL	220
6-AB1 27.2	DETAIL	220
6-AB1 27.3	DETAIL	22D
6-AB1 27.4	DETAIL	220
6-AB1 27.5	DETAIL	220
6-AB1- 27.6	DETAIL	22D
6-AB1- 27.7	DETAIL	22D
6-AB1- 27.8	DETAIL	220
6-AB1- 28	DETAIL	221
6-AB1- 28.1	DETAIL	221
6-AB1- 29	DETAIL	222
6-AB1- 29.1	DETAIL	222
6-AB1- 30	DETAIL	223
6-AB1- 31	DETAIL	224
6-AB1- 32	DETAIL	225
6-AB1- 33	DETAIL	226
6-AB1- 33.1	DETAIL	226
6-AB1- 34	DETAIL	227
6-AB1- 35	DETAIL	22B
6-AB1- 36	DETAIL	229
6-AB1- 36.1	DETAIL	229
6-AB1- 36.2	DETAIL	229
6-AB1- 37	DETAIL	230
6-AB1- 3B	DETAIL	231
6-AB1- 39	DETAIL	232
6-AB1- 39.1	DETAIL	232
6-AB1- 4D	DETAIL	233
6-AB1- 40.1	DETAIL	233
6-AB1- 41	DETAIL	234
6-AB1- 41.1	DETAIL	234
6-AB1- 41.2	DETAIL	234
6-AB1- 41.3	DETAIL	234
6-AB1- 41.4	DETAIL	234
6-AB1- 42	DETAIL	235
6-AB1- 42.1	DETAIL	235
6-AB1- 43	DETAIL	236
6-AB1- 44	DETAIL	237
6-AB1- 44.1	DETAIL	237
6-AB1- 44.2	DETAIL	237
6-AB1- 44.3	DETAIL	237
6-AB1- 44.4	DETAIL	237
6-AB1- 44.5	DETAIL	237
6-AB1- 44.6	DETAIL	237
6-AB1- 44.7	DETAIL	237
6-AB1- 44.B	DETAIL	237
6-AB1- 45	DETAIL	23B
6-AB1- 45.1	DETAIL	238
6-AB1- 46	DETAIL	240
6-AB1- 47	DETAIL	241
6-AB1- 48	DETAIL	242
6-AB1- 49	DETAIL	243
6-AB1- 49.1	DETAIL	243
6-AB1- 50	DETAIL	244
6-AB1- 5D.1	DETAIL	244
6-AB1- 51	DETAIL	245
6-AB1- 51.1	DETAIL	245
6-AB1- 51.2	DETAIL	245
6-AB1- 51.3	DETAIL	245
6-AB1- 52	DETAIL	246
6-AB1- 52.1	DETAIL	246
6-AB1- 52.2	DETAIL	246
6-AB1- 53	DETAIL	247
6-AB1- 53*	ALTERNATE	
6-AB1- 53.1	DETAIL	247
6-AB1- 53.1*	ALTERNATE	
6-AB1- 53.2	DETAIL	247
6-AB1- 53.3	DETAIL	247
6-AB1- 53.4	DETAIL	247
6-AB1- 54	DETAIL	248
6-AB1- 55	DETAIL	249
6-AB1- 55.1	DETAIL	249
6-AB1- 56	DETAIL	251
6-AB1- 56.1	DETAIL	251
6-AB1- 56.2	DETAIL	251
6-AB1- 56.3	DETAIL	251
6-AB1- 56.4	DETAIL	251
6-AB1- 56.5	DETAIL	251
6-AB1- 57	DETAIL	252
6-AB1- 58	DETAIL	253

79

SKILLING, HELLE, CHRISTIANSEN, ROBERTSON — **Structural & Civil Engineers**

PROJECT: THE WORLD TRADE CENTER

TITLE: CONNECTION DETAILS - INDEX

DATE: 4/ 1/69

REVISIONS

Printed 5-1-69

6-A81- 59	DETAIL	254
6-A81- 59.1	DETAIL	254
6-A81- 59.2	DETAIL	254
6-A81- 59.3	DETAIL	254
6-A81- 60	DETAIL	255
6-A81- 60.1	DETAIL	255
6-A81- 61	DETAIL	256
6-A81- 62	DETAIL	257
6-A81- 62.1	DETAIL	257
6-A81- 63	DETAIL	258
6-A81- 64	DETAIL	259
6-A81- 65	DETAIL	260
6-A81- 65.1	DETAIL	260
6-A81- 65.3	DETAIL	260
6-A81- 65.4	DETAIL	260
6-A81- 66	DETAIL	261
6-A81- 67	DETAIL	262
6-A81- 68	DETAIL	263
6-A81- 69	DETAIL	264
6-A81- 70	DETAIL	265
6-A81- 70.1	DETAIL	265
6-A81- 70.2	DETAIL	265
6-A81- 71	DETAIL	266
6-A81- 72	DETAIL	267
6-A81- 72.1	DETAIL	267
6-A81- 73	DETAIL	268
6-A81- 74	DETAIL	269
6-A81- 75	DETAIL	270
6-A81- 75.1	DETAIL	270
6-A81- 76	DETAIL	271
6-A81- 76.1	DETAIL	271
6-A81- 77	DETAIL	272
6-A81- 77.1	DETAIL	272
6-A81- 77.2	DETAIL	272
6-A81- 77.3	DETAIL	272
6-A81- 77.4	DETAIL	272
6-A81- 78	DETAIL	273
6-A81- 78.1	DETAIL	273
6-A81- 81	DETAIL	274
6-A81- 81*	ALTERNATE	
6-A81- 81*	ALTERNATE	
6-A81- 81*	ALTERNATE	5
6-A81- 81.1	DETAIL	274
6-A81- 81.1*	ALTERNATE	
6-A81- 81.1*	ALTERNATE	5
6-A81- 81.2	DETAIL	274
6-A81- 82	DETAIL	275
6-A81- 83	DETAIL	276
6-A81- 83*	ALTERNATE	1
6-A81- 83.1	DETAIL	276
6-A81- 83.1*	ALTERNATE	1
6-A81- 83.2	DETAIL	276
6-A81- 84	DETAIL	277
6-A81- 85	DETAIL	278
6-A81- 85*	ALTERNATE	
6-A81- 85.1	DETAIL	278
6-A81- 86	DETAIL	279
6-A81- 86.1	DETAIL	279
6-A81- 87	DETAIL	280
6-A81- 88	DETAIL	281
6-A81- 89	DETAIL	282
6-A81- 89.1	DETAIL	282
6-A81- 90	DETAIL	283
6-A81- 90.1	DETAIL	283
6-A81- 90.2	DETAIL	283
6-A81- 90.3	DETAIL	283
6-A81- 90.4	DETAIL	283
6-A81- 90.5	DETAIL	283
6-A81- 90.6	DETAIL	283
6-A81- 90.7	DETAIL	287
6-A81- 90.8	DETAIL	283
6-A81- 90.9	DETAIL	283
6-A81- 90.10	DETAIL	283
6-A81- 90.11	DETAIL	283
6-A81- 91	DETAIL	284
6-A81- 91.1	DETAIL	285
6-A81- 92	DETAIL	285
6-A81- 92.1	DETAIL	286
6-A81- 93	DETAIL	286
6-A81- 93.1	DETAIL	286
6-A81- 93.2	DETAIL	286
6-A81- 94	DETAIL	287
6-A81- 94.1	DETAIL	287
6-A81- 94.2	DETAIL	287
6-A81- 94.3	DETAIL	287
6-A81- 95	DETAIL	288
6-A81- 96	DETAIL	289
6-A81- 97	DETAIL	290
6-A81- 98	DETAIL	291
6-A81- 99	DETAIL	292
6-A81- 99.1	DETAIL	292
6-A81- 99.2	DETAIL	292
6-A81- 99.3	DETAIL	292
6-A81-100	DETAIL	293
6-A81-101	DETAIL	294
6-A81-101.1	DETAIL	294
6-A81-101.2	DETAIL	294
6-A81-101.3	DETAIL	294
6-A81-101.4	DETAIL	294
6-A81-102	DETAIL	295
6-A81-102.1	DETAIL	295
6-A81-103	DETAIL	296
6-A81-103.1	DETAIL	296
6-A81-103.2	DETAIL	296
6-A81-104	DETAIL	297
6-A81-105	DETAIL	298
6-A81-106	DETAIL	299
6-A81-107	DETAIL	300
6-A81-108	DETAIL	301
6-A81-108.1	DETAIL	301
6-A81-108.2	DETAIL	301
6-A81-109	DETAIL	302
6-A81-110	DETAIL	303
6-A81-110*	ALTERNATE	
6-A81-110.1	DETAIL	303
6-A81-110.2	DETAIL	303
6-A81-111	DETAIL	304
6-A81-111.1	DETAIL	304
6-A81-112	DETAIL	305
6-A81-113	DETAIL	306
6-A81-113.1	DETAIL	306
6-A81-113.2	DETAIL	306
6-A81-114	DETAIL	307
6-A81-114.1	DETAIL	307
6-A81-114.2	DETAIL	307
6-A81-114.3	DETAIL	307
6-A81-114.4	DETAIL	307
6-A81-115	DETAIL	308
6-A81-115.1	DETAIL	308
6-A81-116	DETAIL	309
6-A81-116.1	DETAIL	309
6-A81-117	DETAIL	310
6-A81-117.1	DETAIL	310
6-A81-117.2	DETAIL	310
6-A81-117.2*	ALTERNATE	
6-A81-117.3	DETAIL	310
6-A81-117.4	DETAIL	310

LICENSED PROFESSIONAL ENGINEER LESLIE E. ROBERTSON No. 34360 UNIVERSITY OF THE STATE OF NEW YORK

SKILLING, HELLE, CHRISTIANSEN, ROBERTSON — **Structural & Civil Engineers**

PROJECT: THE WORLD TRADE CENTER | TITLE: CONNECTION DETAILS - INDEX | DATE: 4/ 1/69

REVISIONS

Printed 5-1-69

6-AB1-118	DETAIL	311
6-AB1-118.1	DETAIL	311
6-AB1-119	DETAIL	312
6-AB1-119.1	DETAIL	312
6-AB1-120	DETAIL	313
6-AB1-120.1	DETAIL	313
6-AB1-120.2	DETAIL	313
6-AB1-120.3	DETAIL	313
6-AB1-121	DETAIL	314
6-AB1-121.1	DETAIL	314
6-AB1-122	DETAIL	315
6-AB1-122.1	DETAIL	315
6-AB1-123	DETAIL	316
6-AB1-123.1	DETAIL	316
6-AB1-124	DETAIL	317
6-AB1-124.1	DETAIL	317
6-AB1-125	DETAIL	318
6-AB1-127	DETAIL	320
6-AB1-127.1	DETAIL	320
6-AB1-128	DETAIL	321
6-AB1-128.1	DETAIL	321
6-AB1-129	DETAIL	322
6-AB1-129.1	DETAIL	322
6-AB1-129.2	DETAIL	322
6-AB1-130	DETAIL	323
6-AB1-131	DETAIL	324
6-AB1-131.1	DETAIL	324
6-AB1-131.2	DETAIL	324
6-AB1-132	DETAIL	325
6-AB1-133	DETAIL	326
6-AB1-134	DETAIL	327
6-AB1-135	DETAIL	328
6-AB1-136	DETAIL	329
6-AB1-136.1	DETAIL	329
6-AB1-137	DETAIL	330
6-AB1-137.1	DETAIL	330
6-AB1-138	DETAIL	331
6-AB1-139	DETAIL	332
6-AB1-140	DETAIL	333
6-AB1-141	DETAIL	334
6-AB1-141.1	DETAIL	334
6-AB1-141.2	DETAIL	334
6-AB1-142	DETAIL	335
6-AB1-142.1	DETAIL	335
6-AB1-142.2	DETAIL	335
6-AB1-142.3	DETAIL	335
6-AB1-142.4	DETAIL	335
6-AB1-142.5	DETAIL	335
6-AB1-142.6	DETAIL	335
6-AB1-142.7	DETAIL	335
6-AB1-142.8	DETAIL	335
6-AB1-142.9	DETAIL	335
6-AB1-142.10	DETAIL	335
6-AB1-143	DETAIL	336
6-AB1-144	DETAIL	337
6-AB1-144.1	DETAIL	337
6-AB1-144.2	DETAIL	337
6-AB1-145	DETAIL	338
6-AB1-145.1	DETAIL	338
6-AB1-145.2	DETAIL	338
6-AB1-145.4	DETAIL	338
6-AB1-146	DETAIL	339
6-AB1-147	DETAIL	340
6-AB1-148	DETAIL	341
6-AB1-149	DETAIL	342
6-AB1-150	DETAIL	343
6-AB1-151	DETAIL	344
6-AB1-151.1	DETAIL	344
6-AB1-152	DETAIL	345
6-AB1-152.1	DETAIL	345
6-AB1-153	DETAIL	346
6-AB1-154	DETAIL	347
6-AB1-154.1	DETAIL	347
6-AB1-154.2	DETAIL	347
6-AB1-155	DETAIL	348
6-AB1-155.1	DETAIL	348
6-AB1-155.2	DETAIL	348
6-AB1-156	DETAIL	349
6-AB1-156.1	DETAIL	349
6-AB1-156.2	DETAIL	349
6-AB1-156.3	DETAIL	349
6-AB1-157	DETAIL	350
6-AB1-157.1	DETAIL	350
6-AB1-157.2	DETAIL	350
6-AB1-157.3	DETAIL	350
6-AB1-157.4	DETAIL	350
6-AB1-158	DETAIL	351
6-AB1-159	DETAIL	352
6-AB1-159.1	DETAIL	352
6-AB1-160	DETAIL	353
6-AB1-160.1	DETAIL	353
6-AB1-161	DETAIL	354
6-AB1-161.1	DETAIL	354
6-AB1-161.2	DETAIL	354
6-AB1-162	DETAIL	355
6-AB1-162.1	DETAIL	355
6-AB1-164	DETAIL	357
6-AB1-164.1	DETAIL	357
6-AB1-164.2	DETAIL	357
6-AB1-165	DETAIL	358
6-AB1-166	DETAIL	359
6-AB1-166.1	DETAIL	359
6-AB1-167	DETAIL	360
6-AB1-167.1	DETAIL	360
6-AB1-168	DETAIL	361
6-AB1-169	DETAIL	362
6-AB1-169.1	DETAIL	362
6-AB1-170	DETAIL	363
6-AB1-171	DETAIL	364
6-AB1-171.1	DETAIL	364
6-AB1-171.2	DETAIL	364
6-AB1-171.3	DETAIL	364
6-AB1-171.4	DETAIL	364
6-AB1-171.5	DETAIL	364
6-AB1-171.6	DETAIL	364
6-AB1-171.7	DETAIL	364
6-AB1-172	DETAIL	365
6-AB1-173	DETAIL	366
6-AB1-173.1	DETAIL	366
6-AB1-174	DETAIL	367
6-AB1-174.1	DETAIL	367
6-AB1-175	DETAIL	368
6-AB1-175.1	DETAIL	368
6-AB1-176	DETAIL	369
6-AB1-177	DETAIL	370
6-AB1-177.1	DETAIL	370
6-AB1-177.2	DETAIL	370
6-AB1-177.3	DETAIL	370
6-AB1-177.4	DETAIL	370
6-AB1-178	DETAIL	371
6-AB1-178.1	DETAIL	371
6-AB1-179	DETAIL	372
6-AB1-179.1	DETAIL	372
6-AB1-180	DETAIL	373
6-AB1-180.1	DETAIL	373
6-AB1-181	DETAIL	374
6-AB1-181.1	DETAIL	374
6-AB1-182	DETAIL	375
6-AB1-183	DETAIL	376
6-AB1-184	DETAIL	377
6-AB1-184.1	DETAIL	377
6-AB1-185	DETAIL	378
6-AB1-186	DETAIL	379

LICENSED PROFESSIONAL ENGINEER — LESLIE E. ROBERTSON — No. 34360 — UNIVERSITY OF THE STATE OF NEW YORK

SKILLING, HELLE, CHRISTIANSEN, ROBERTSON Structural & Civil Engineers

PROJECT: THE WORLD TRADE CENTER | TITLE: CONNECTION DETAILS - INDEX | DATE: 4/ 1/69

REVISIONS

Printed 5-1-69

6-AB1-187	DETAIL	380
6-AB1-188	DETAIL	381
6-AB1-188.1	DETAIL	381
6-AB1-188.2	DETAIL	381
6-AB1-189	DETAIL	382
6-AB1-189.1	DETAIL	382
6-AB1-189.2	DETAIL	382
6-AB1-189.3	DETAIL	382
6-AB1-189.4	DETAIL	382
6-AB1-189.5	DETAIL	382
6-AB1-189.6	DETAIL	382
6-AB1-190	DETAIL	383
6-AB1-191	DETAIL	384
6-AB1-192	DETAIL	385
6-AB1-193	DETAIL	386
6-AB1-194	DETAIL	387
6-AB1-195	DETAIL	388
6-AB1-196	DETAIL	389
6-AB1-197	DETAIL	390
6-AB1-198	DETAIL	391
6-AB1-198.1	DETAIL	391
6-AB1-198.2	DETAIL	391
6-AB1-198.3	DETAIL	391
6-AB1-198.4	DETAIL	391
6-AB1-199	DETAIL	392
6-AB1-200	DETAIL	393
6-AB1-200.1	DETAIL	393
6-AB1-200.2	DETAIL	393
6-AB1-202	DETAIL	395
6-AB1-202.1	DETAIL	395
6-AB1-202.2	DETAIL	395
6-AB1-202.3	DETAIL	395
6-AB1-203	DETAIL	396
6-AB1-204	DETAIL	397
6-AB1-205	DETAIL	398
6-AB1-205.1	DETAIL	398
6-AB1-205.2	DETAIL	398
6-AB1-206	DETAIL	399
6-AB1-206.1	DETAIL	399
6-AB1-206.2	DETAIL	400
6-AB1-207	DETAIL	701
6-AB1-208	DETAIL	702
6-AB1-208.1	DETAIL	702
6-AB1-209	DETAIL	703
6-AB1-209.1	DETAIL	703
6-AB1-209.2	DETAIL	703
6-AB1-210	DETAIL	704
6-AB1-211	DETAIL	705
6-AB1-211*	ALTERNATE	
6-AB1-211.1	DETAIL	705
6-AB1-212	DETAIL	706
6-AB1-213	DETAIL	707
6-AB1-213*	ALTERNATE	
6-AB1-214	DETAIL	708
6-AB1-215	DETAIL	709
6-AB1-215.1	DETAIL	709
6-AB1-216	DETAIL	710
6-AB1-216.1	DETAIL	710
6-AB1-217	DETAIL	711
6-AB1-217.1	DETAIL	711
6-AB1-218	DETAIL	712
6-AB1-219	DETAIL	713
6-AB1-220	DETAIL	714
6-AB1-220.1	DETAIL	714
6-AB1-221	DETAIL	715
6-AB1-222	DETAIL	716
6-AB1-223	DETAIL	717
6-AB1-224	DETAIL	718
6-AB1-225	DETAIL	719
6-AB1-226	DETAIL	720
6-AB1-227	DETAIL	721
6-AB1-228	DETAIL	722
6-AB1-229	DETAIL	723
6-AB1-230	DETAIL	724
6-AB1-231	DETAIL	725
6-AB1-232	DETAIL	726
6-AB1-233	DETAIL	727
6-AB1-234	SECTIONS	
6-AB1-235	DETAIL	728
6-AB1-235.1	DETAIL	728
6-AB1-236	DETAIL	729
6-AB1-237	DETAIL	730
6-AB1-238	DETAIL	731
6-AB1-239	DETAIL	732
6-AB1-240	DETAIL	733
6-AB1-241	DETAIL	734
6-AB1-242	DETAIL	735
6-AB1-243	DETAIL	736
6-AB1-244	DETAIL	737
6-AB1-245	DETAIL	738
6-AB1-246	DETAIL	739
6-AB1-247	DETAIL	740
6-AB1-248	DETAIL	750
6-AB1-249	DETAIL	751
6-AB1-249.1	DETAIL	751
6-AB1-250	DETAIL	752
6-AB1-251	DETAIL	753
6-AB1-252	DETAIL	754
6-AB1-253	DETAIL	755
6-AB1-254	DETAIL	756
6-AB1-255	DETAIL	758
6-AB1-256	DETAIL	759
6-AB1-257	DETAIL	761
6-AB1-258	DETAIL	766
6-AB1-259	DETAIL	767
6-AB1-259.1	DETAIL	767
6-AB1-260	DETAIL	771
6-AB1-261	DETAIL	772
6-AB1-262	DETAIL	773
6-AB1-263	DETAIL	774
6-AB1-264	DETAIL	775
6-AB1-266	DETAIL	777
6-AB1-267	DETAIL	778
6-AB1-268	DETAIL	779
6-AB1-269	DETAIL	780
6-AB1-270	DETAIL	781
6-AB1-271	DETAIL	782
6-AB1-272	DETAIL	783
6-AB1-301	DETAIL	788
6-AB1-302	DETAIL	789
6-AB1-303	DETAIL	792
6-AB1-304	DETAIL	795
6-AB1-305	DETAIL	798
6-AB1-306	DETAIL	800
6-AB1-306.1	DETAIL	800
6-AB1-307	DETAIL	801
6-AB1-307.1	DETAIL	801
6-AB1-308	DETAIL	802
6-AB1-308.1	DETAIL	802
6-AB1-309	DETAIL	803
6-AB1-309.1	DETAIL	803
6-AB1-309.2	DETAIL	803
6-AB1-309.3	DETAIL	803
6-AB1-310	DETAIL	804
6-AB1-310.1	DETAIL	804
6-AB1-310.2	DETAIL	804
6-AB1-310.3	DETAIL	804
6-AB1-311	DETAIL	805
6-AB1-311.1	DETAIL	805
6-AB1-312	DETAIL	806
6-AB1-312.1	DETAIL	806
6-AB1-313	DETAIL	807
6-AB1-314	DETAIL	808
6-AB1-315	DETAIL	809
6-AB1-500*	ALTERNATE	

LICENSED PROFESSIONAL ENGINEER LESLIE E. ROBERTSON No. 34360 UNIVERSITY OF THE STATE OF NEW YORK

82

6-AB1-0.3

SKILLING - HELLE - CHRISTIANSEN - ROBERTSON Structural & Civil Engineers

PROJECT THE WORLD TRADE CENTER | TITLE DRAWING BOOK 6 | DATE

REVISIONS

6-AB1-

Connection Details 200-399 & 700-799
(See 6-AB1-0 for index)

6-AB2-

Connection Details 100-199 & 400-599
(See 6-AB2-0 for index)

6-AB3-

Horizontal Bracing & Bridging Details
Beam Framed Floors
(See 6-AB3-0 for index)

6-AB4-

Louver Wall Struts
(See 6-AB4-0 for index)

6-AB5-

Vertical Bracing
(See 6-AB5-0 for index)

6-A6- & 6-B6-

Interior Columns to Floor 1
(See 6-AB6-1 for index)

6-AB7-

Anchors to Slabs
(See 6-AB7-0 for index)

6-AB8-

Perimeter Core Truss Seats &
Shear Studs
(See 6-AB8-1 for index)

6-AB9-

Temporary Framing for Elevator 6 & 7
(See 6-AB9-0 for index)

Note: See 6-AB0-
for latest date
for each page

LICENSED PROFESSIONAL ENGINEER
LESLIE E. ROBERTSON
No. 34360
STATE OF NEW YORK

REVISIONS
7-28-67

1. DIMENSIONS
   a. All beam reference centerlines and column reference face or center lines are located in the plans.
   b. Elevation of top of steel is shown in the plans. See Beam Types (5AB2-) for location on beam of reference top of steel.
   c. Where a dimension is shown in the drawings from the centerline of a beam or column it shall be considered to be from the reference centerline of the beam or column. Where a dimension is shown from the face of a column, it shall be considered to be from the theoretical face of the column. The theoretical face of the column is located from the reference centerline of the column by a distance equal to one half of the scheduled column width or depth.

2. CONNECTION PLATES
   a. Where connection plate dimensions are not shown in the drawings, plate dimensions shall be determined by providing standard AISC edge distances with the indicated bolt spacing.
   b. Use standard gauge for all bolts in beams unless otherwise shown in the drawings, or approved by the Engineer.
   c. The bolt pattern is the same for the top and bottom ℞'s of a connection unless otherwise shown in the drawings.

3. BOLTED CONNECTIONS
   a. All bolted connections shall be friction type connections except where specifically noted in the drawings.
   b. All bolts shall be ASTM A325 bolts, except in locations where ASTM A490 or A307 bolts are specifically called for in the drawings.
   c. Bolted connections shall have a minimum of 2-¾" bolts except where specifically noted in the drawings.

4. STIFFENED SEATS

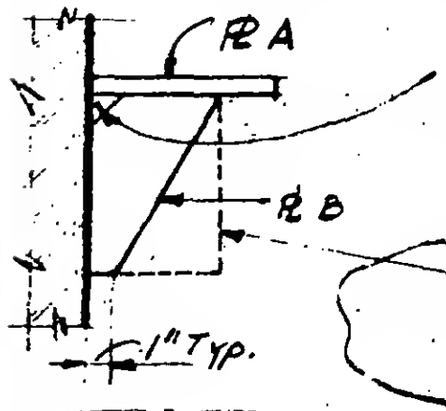

Where ℞ A is welded to the column with complete penetration weld, snipe corner of ℞ B to clear weld.

Where ℞ B is shown in the drawings with a square cut, sloped cut as shown may be supplied.

5. MATERIALS
   a. All connection plates, angles and other detail material shall conform to ASTM A36 unless another type of steel is specifically noted in the drawings.
   b. All manual welding electrodes shall be E70 XX low hydrogen electrodes unless otherwise shown in the drawings.

6. TOP CLIP ANGLES

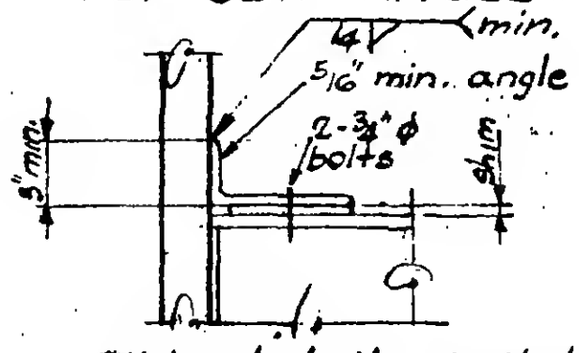

This detail shall be used where top clip angles are indicated in the drawings but not sized.

LICENSED PROFESSIONAL ENGINEER
LESLIE E. ROBERTSON
No. 34360
STATE OF NEW YORK

WORTHINGTON, SKILLING, HELLE & JACKSON — Civil & Structural Engineers

PROJECT: THE WORLD TRADE CENTER | TITLE: CONNECTION DETAIL 201 A,B,C,D | DATE: 5-1-67

REVISIONS

6-19-67
7-28-67
12-21-67

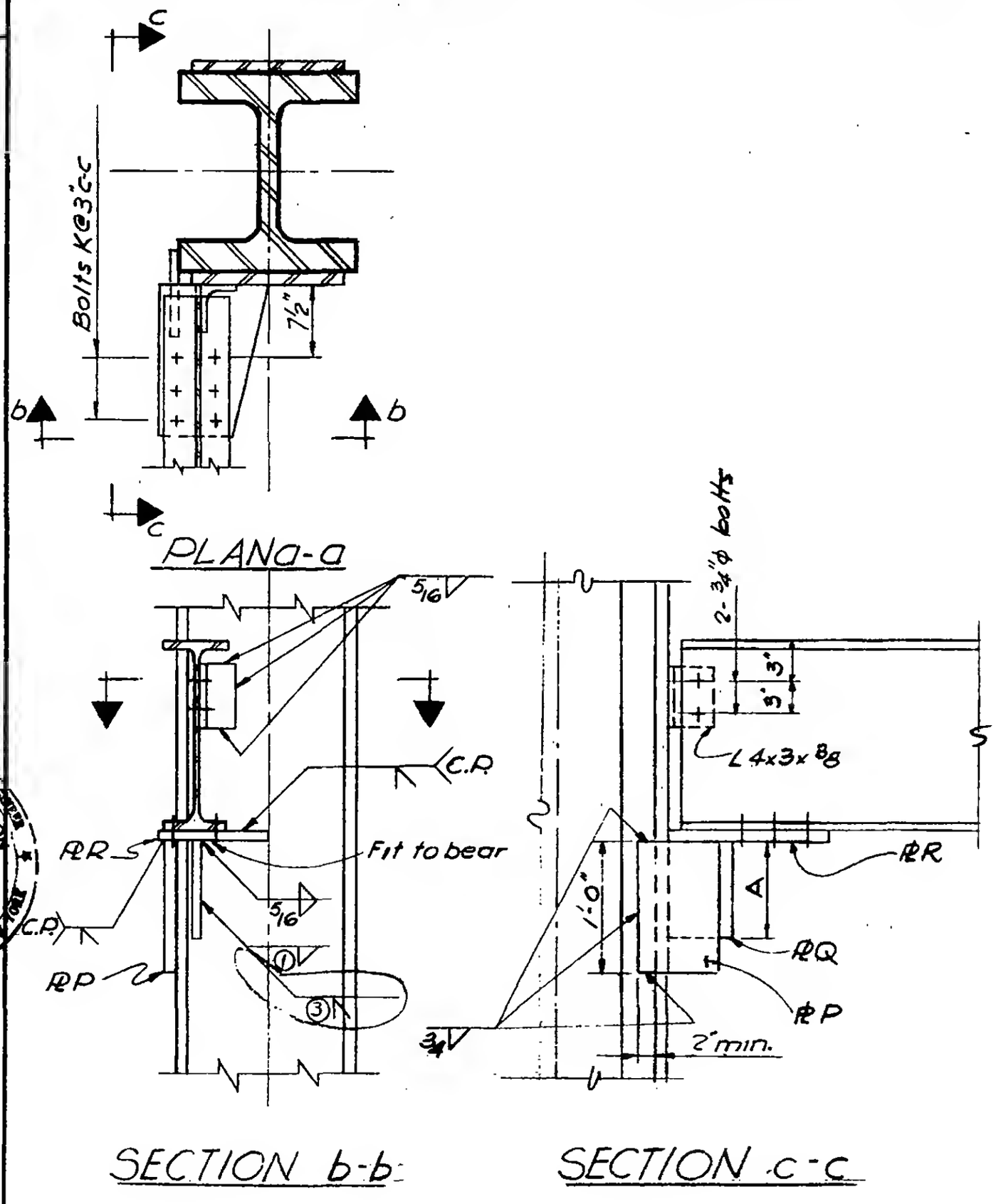

6-AB1-2

SKILLING - HELLE - CHRISTIANSEN - ROBERTSON Structural & Civil Engineers

PROJECT: THE WORLD TRADE CENTER

TITLE: SCHEDULE FOR DETAIL 201 A-F

DATE: 7-28-67

REVISIONS

8-5-67
9-15-67
12-21-67

REF. DWG	6-AB1-2	6-AB1-2	6-AB1-2	6-AB1-2	6-AB1-2.2	6-AB1-2.2
	201 A	201 B	201 C	201 D	201 E	201 F
PLATES						
P	8" x 7/8"	8" x 7/8"	8" x 7/8"	8" x 7/8"	1/2"	5/8"
Q	5" x 3/8"	5" x 3/8"	5" x 3/8"	6" x 3/8"	1/2"	—
R	10 1/2" x 1/2"	10 1/2" x 1/2"	10 1/2" x 1/2"	10 1/2" x 1/2"	—	—
DIMENSIONS						
A	0'-6"	0'-9"	0'-10"	1'-2"	0'-10"	—
B	—	—	—	—	0'-5"	—
BOLTS						
K	6 - 7/8" φ	6 - 7/8" φ	6 - 7/8" φ	6 - 7/8" φ	4 - 3/4" φ	4 - 7/8" φ
L	—	—	—	—	2 - 3/4" φ	—
WELDS						
①	—	—	—	—	1/4	—
②	—	—	—	—	5/16	—
③	C.P.	C.P.	C.P.	C.P.	—	—
ANGLES						
R	—	—	—	—	3 1/2 x 3 1/2 x 5/16	—

6-AB1-2.1

PROFESSIONAL ENGINEER
WILLIAM E. ROBERTSON
No. 34360
STATE OF NEW YORK

WORTHINGTON, SKILLING, HELLE & JACKSON — Civil & Structural Engineers

PROJECT: THE WORLD TRADE CENTER | TITLE: CONNECTION DETAIL 201 E, F, G, H, I | DATE: [illegible]

REVISIONS
9-15-67
10-2-67
10-5-67

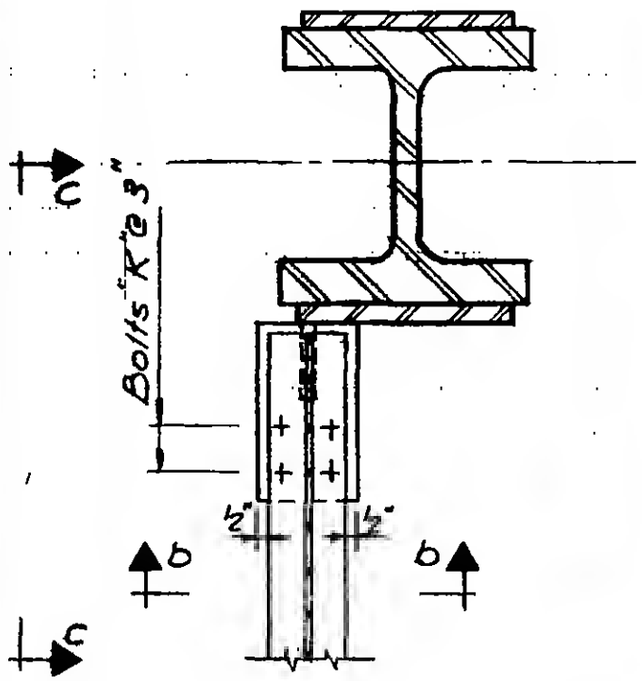

Plan a-a

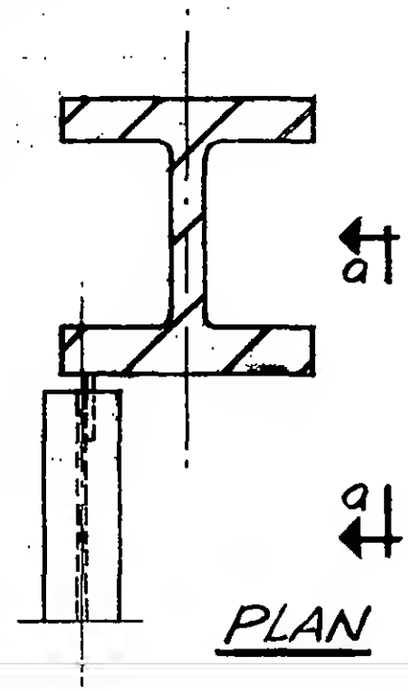

PLAN

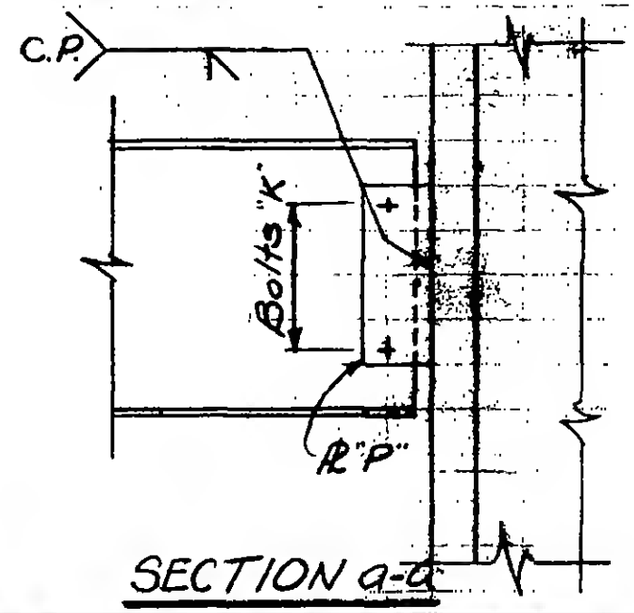

SECTION a-a

DETAIL 201 F, G, H, I, P, Q

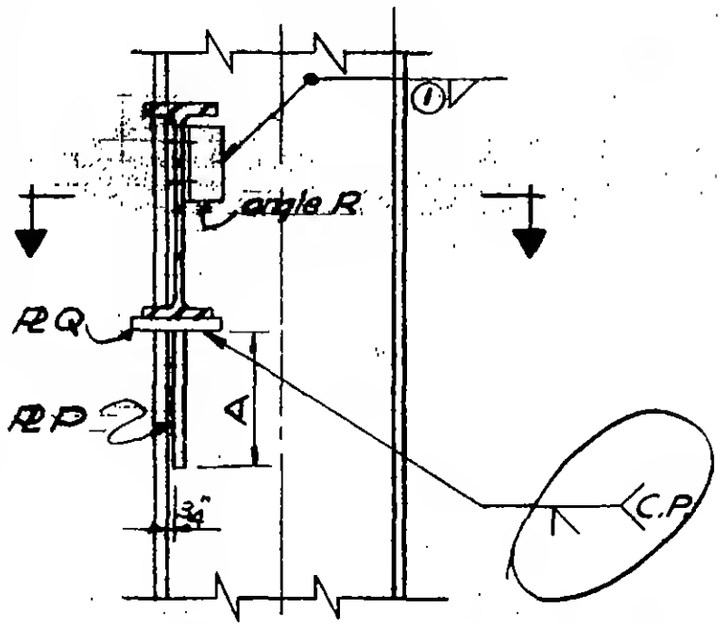

Section b-b

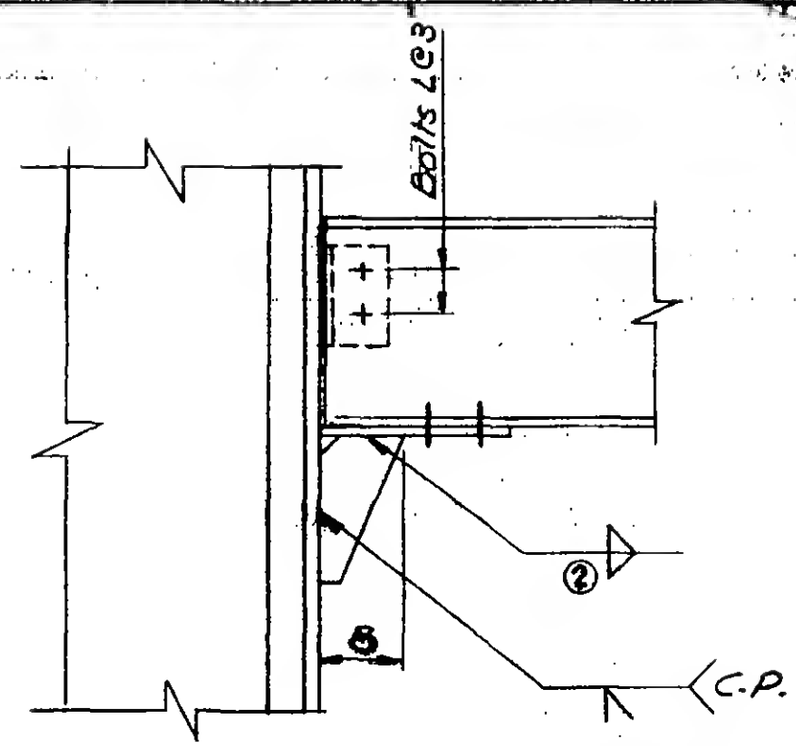

Section c-c

DETAIL 201 E

6-AB1-2.2

SKILLING - HELLE - CHRISTIANSEN - ROBERTSON Structural & Civil Engineers

PROJECT: THE WORLD TRADE CENTER | TITLE: SCHEDULE FOR DETAIL 201 G, H, J, K, L | DATE: 9-15-67

REVISIONS
10-2-67
10-5-67

REF. DWG.	6-AB1-2.2	6-AB1-2.2	6-AB1-2.2	6-AB1-2.4	6-AB1-2.4	6-AB1-2.5
	201G	201H	201I	201-J	201K	201L
PLATES					See ref dwg.	
P	1/2"	5/8"	1"	—		5/8
BOLTS						
K	5-1"φ	2-7/8"φ	2-1" φ (A490)	10-3/4" φ		8-7/8" φ
ANGLES						
P	—	—	—	6×6×2×1'-3"		—
WELDS						
①	—	—	—	3/8		—

6-AB1-2.3

SKILLING - HELLE - CHRISTIANSEN - ROBERTSON — Structural & Civil Engineers

PROJECT: THE WORLD TRADE CENTER | TITLE: CONNECTION DETAIL 201 J, K, S, T | DATE: [redacted]

REVISIONS

10-5-67
9-25-68

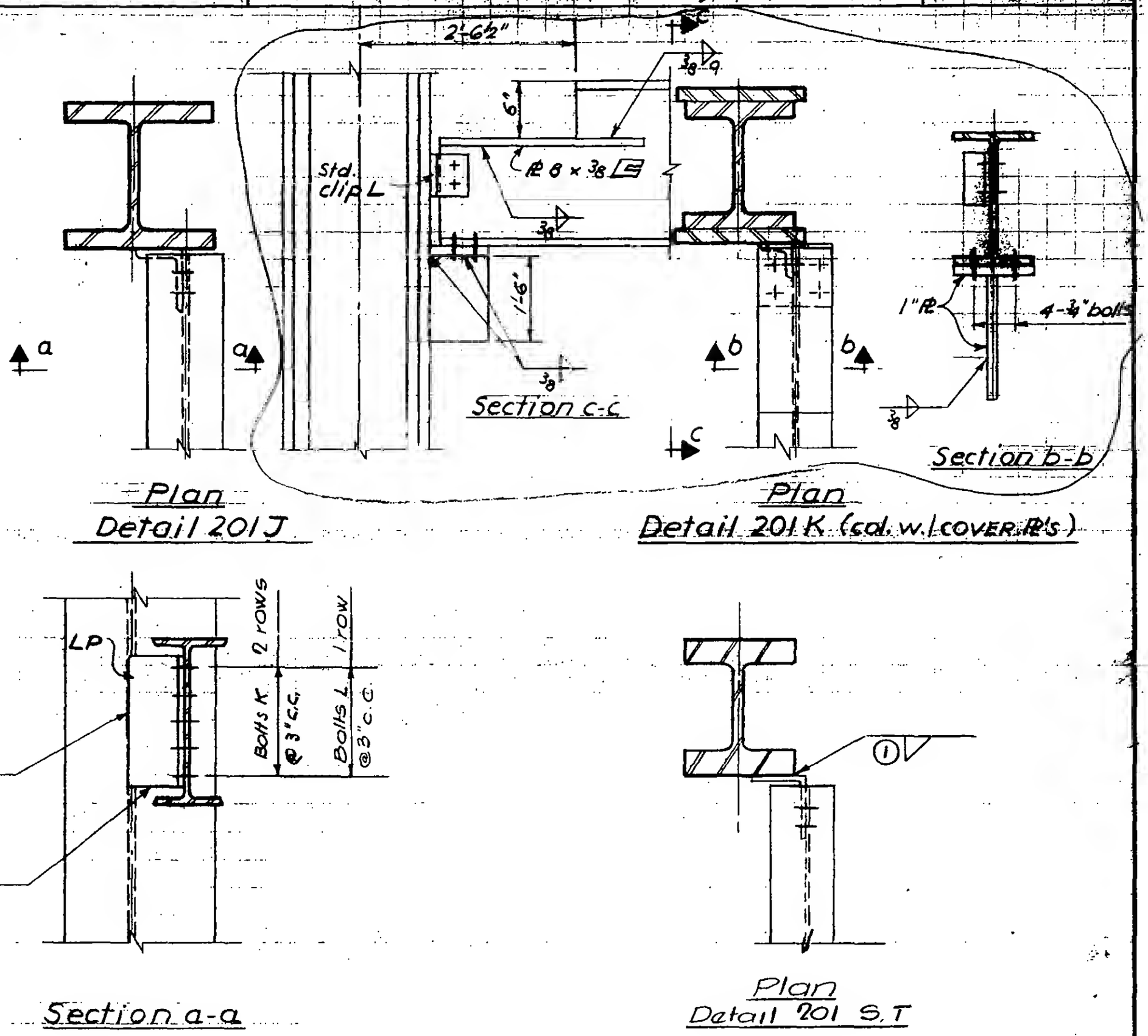

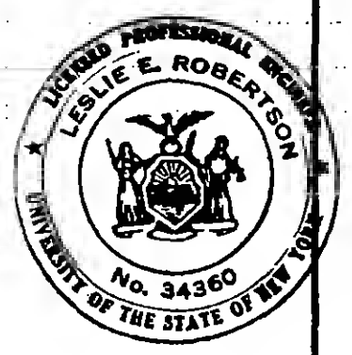

6-AB1-2.4

SKILLING - HELLE - CHRISTIANSEN - ROBERTSON Structural & Civil Engineers

PROJECT THE WORLD TRADE CENTER TITLE CONNECTION DETAIL 201 L, M & R DATE 10-5-67

REVISIONS

10-31-67

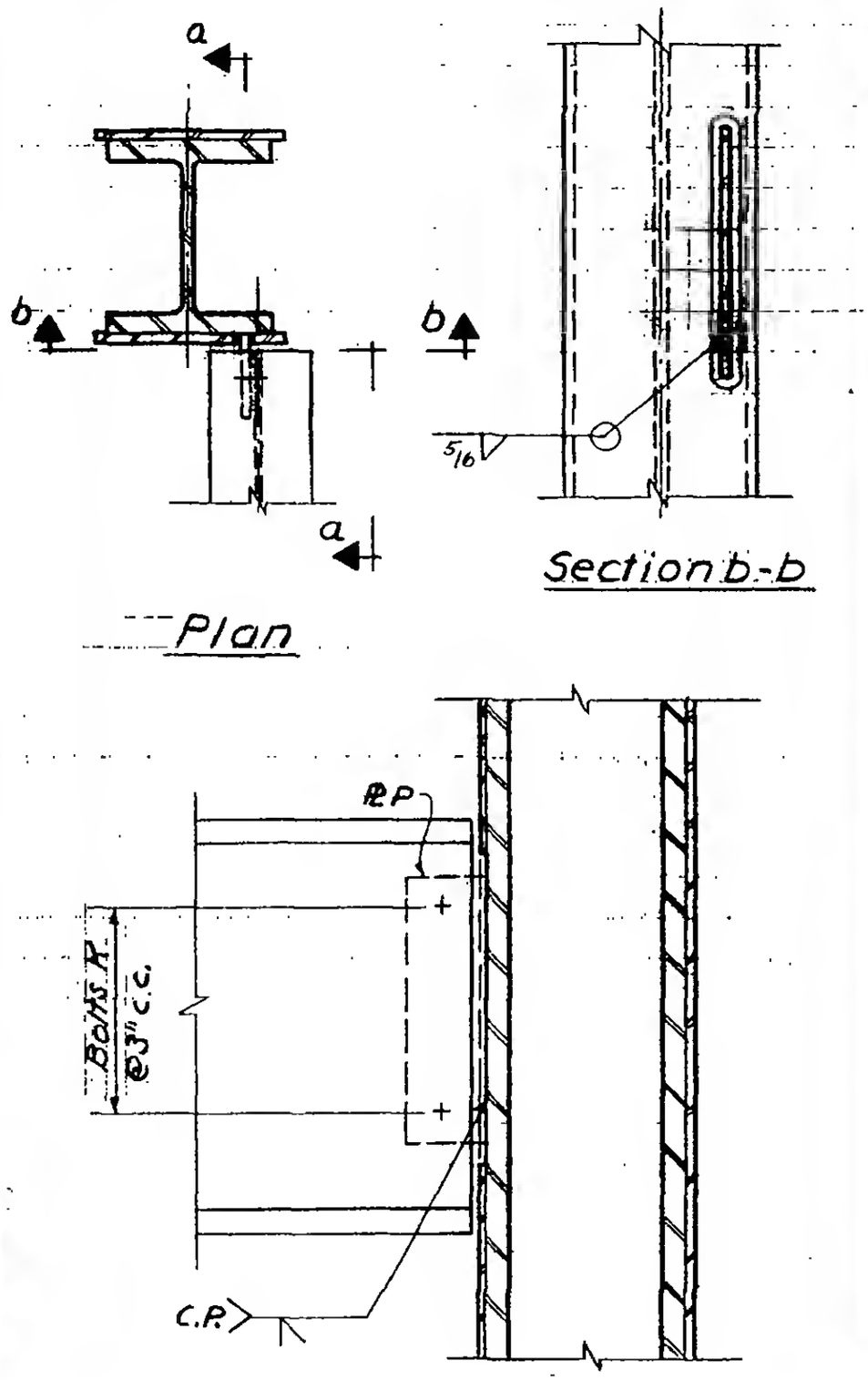

Section a-a

Detail 201L

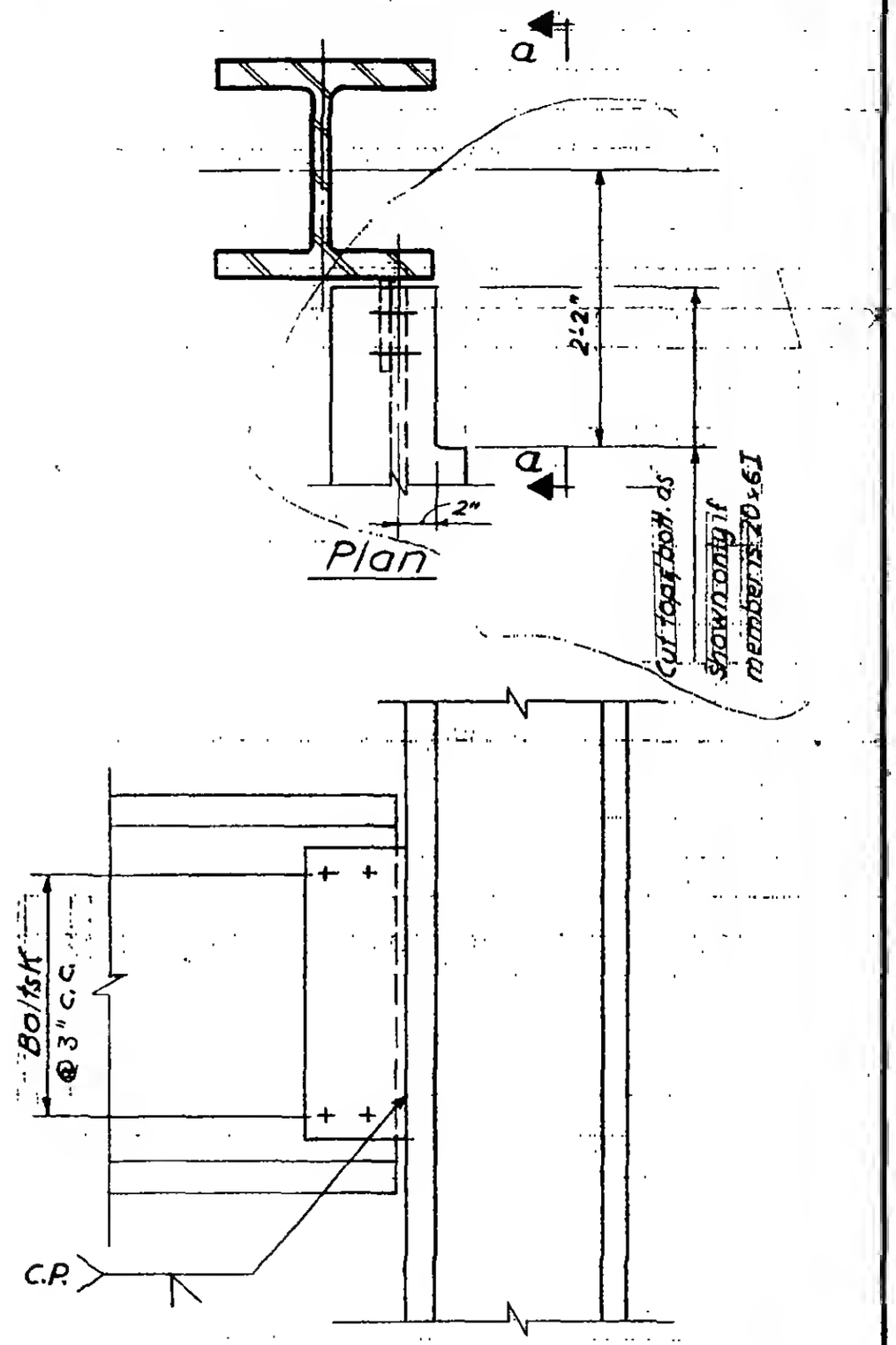

Section a-a

Details 201 M & R

6-AB1-2.5

SKILLING - HELLE - CHRISTIANSEN - ROBERTSON Structural & Civil Engineers

PROJECT: THE WORLD TRADE CENTER | TITLE: SCHEDULE FOR DETAIL 201 M, P, Q, R, S, T | DATE: 10-5-67

REVISIONS

7/14/69

REF. DWG.	G-AB1-2.5	G-AB1-2.2	G-AB1-2.2	G-AB1-2.5	G-AB1-2.4		G-AB1-2.4
	M	P	Q	R	S	T	X
PLATES							
P	7/8"	1/2"	3/8"	7/8	—	—	—
BOLTS							
K	14-1"φ	4-7/8"φ	4-3/4"φ	12-7/8"φ	—	4-7/8"φ	—
L	—	—	—	—	4-7/8"φ	—	4-7/8"φ A490
ANGLES							
P	—	—	—	—	6x4x3/8x1'0"	6x6x3/8x1'6"	6x4x5/8x1'0"
WELDS							
①	—	—	—	—	1/4	1/4	3/8

LICENSED PROFESSIONAL ENGINEER LESLIE E. ROBERTSON No. 34360 UNIVERSITY OF THE STATE OF NEW YORK

G-AB1-2.6

WORTHINGTON, SKILLING, HELLE & JACKSON — Civil & Structural Engineers

PROJECT: THE WORLD TRADE CENTER | TITLE: CONNECTION DETAIL 202 A, B, C, D, E, F, G | DATE: 5-22-67

REVISIONS
7-25-67
8-5-67
8-14-67
9-15-67
10-2-67
12-21-67

NOTE
For sections see
6-ABI-5.2 & 5.3

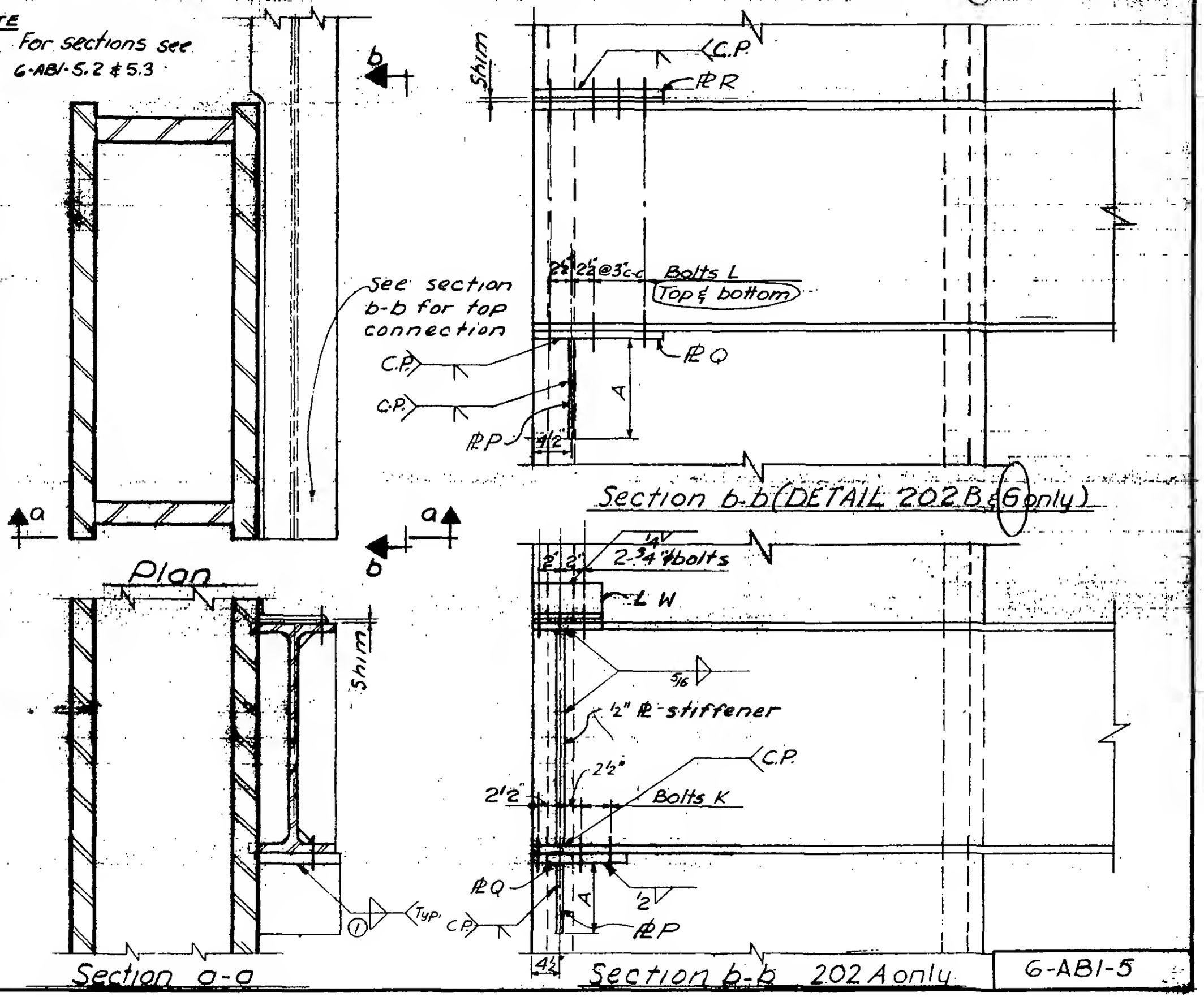

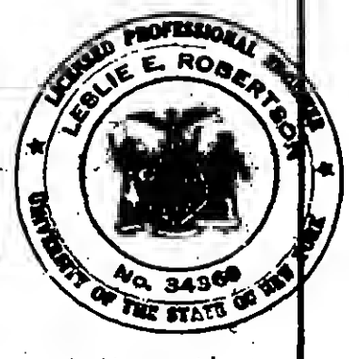

6-ABI-5

SKILLING - HELLE - CHRISTIANSEN - ROBERTSON Structural & Civil Engineers

PROJECT: THE WORLD TRADE CENTER | TITLE: SCHEDULE FOR DETAIL 202 A, B, C, D, E, F | DATE: 8-5-67

REVISIONS
8-14-67
9-15-67
10-2-67
11-10-67

REF. DWG.	6-ABI-5	6-ABI-5	6-ABI-5.2	6-ABI-5.2	6-ABI-5.3	6-ABI-5.3
	202A	202B	202C	202D	202E	202F
PLATES						
P	5/8"	5/8"	3/4"	—	—	—
Q	5/8"	3/4"	3/4"	—	—	—
R	—	3/4"	—	—	—	—
S	—	—	1"	1"	3/4"	1"
T	—	—	1"	1"	3/4"	1"
U	—	—	1/2"	3/8"	3/8"	3/8"
V	—	—	—	—	1/2"	3/4"
DIMENSIONS						
A	1'-4"	1'-4"	0'-9"	—	—	—
B	—	—	1'-3"	1'-6"	1'-3"	1'-8"
C	—	—	2'-0"	2'-0"	2'-9"	3'-0"
BOLTS						
K	3-3/4"φ	—	2-3/4"φ	—	—	—
L	—	4-3/4"φ	—	16-1 1/8"φ	—	—
M	—	—	7-1"φ	7-1"φ	9-1 1/8"φ(A490)	11-1 1/8"(A490)
ANGLES						
N	5×3×5/16×0'-5 1/2"	—	—	—	—	—
WELDS						
1	5/16"	5/16"	1/2"	1/2"	—	—
2	—	—	1/2"	—	—	—

6-ABI-5.1

LICENSED PROFESSIONAL ENGINEER
LESLIE E. ROBERTSON
No. 34360
UNIVERSITY OF THE STATE OF NEW YORK

SKILLING - HELLE - CHRISTIANSEN - ROBERTSON Structural & Civil Engineers

PROJECT: THE WORLD TRADE CENTER | TITLE: CONNECTION DETAIL 202C,D, | DATE: 8-14-67

REVISIONS
11-23-67

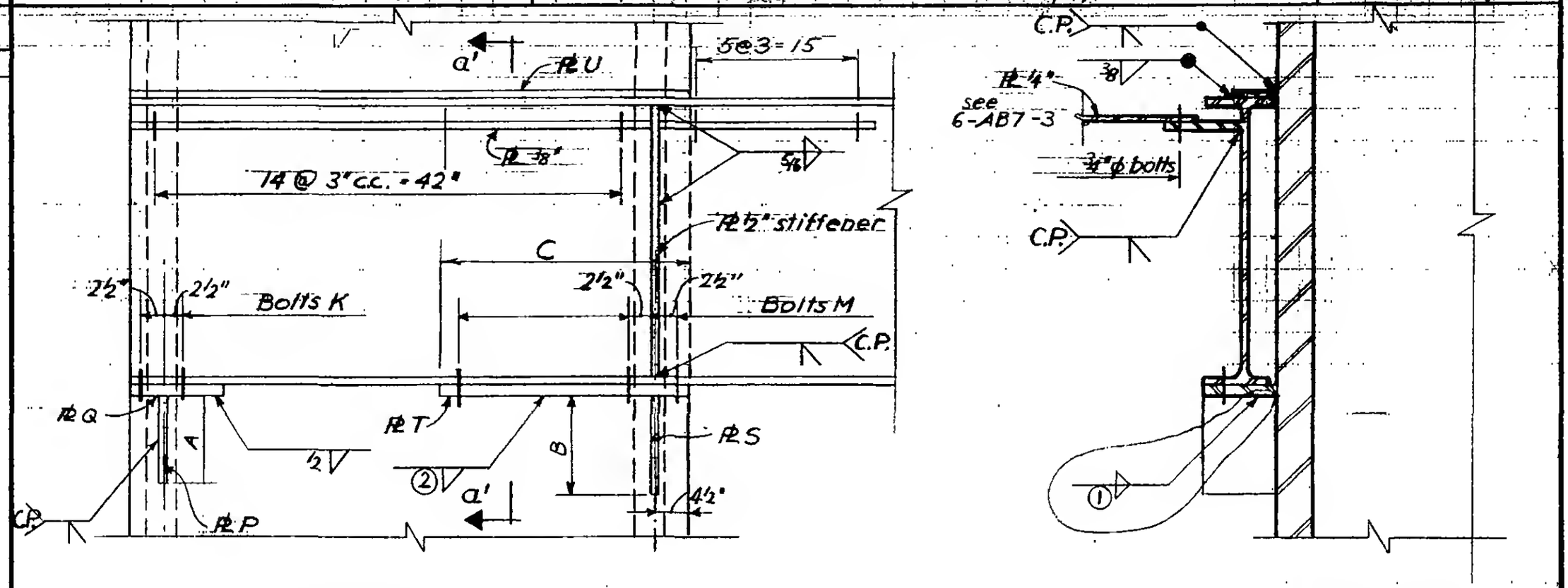

Section b-b, 202 C only

Section a'-a'

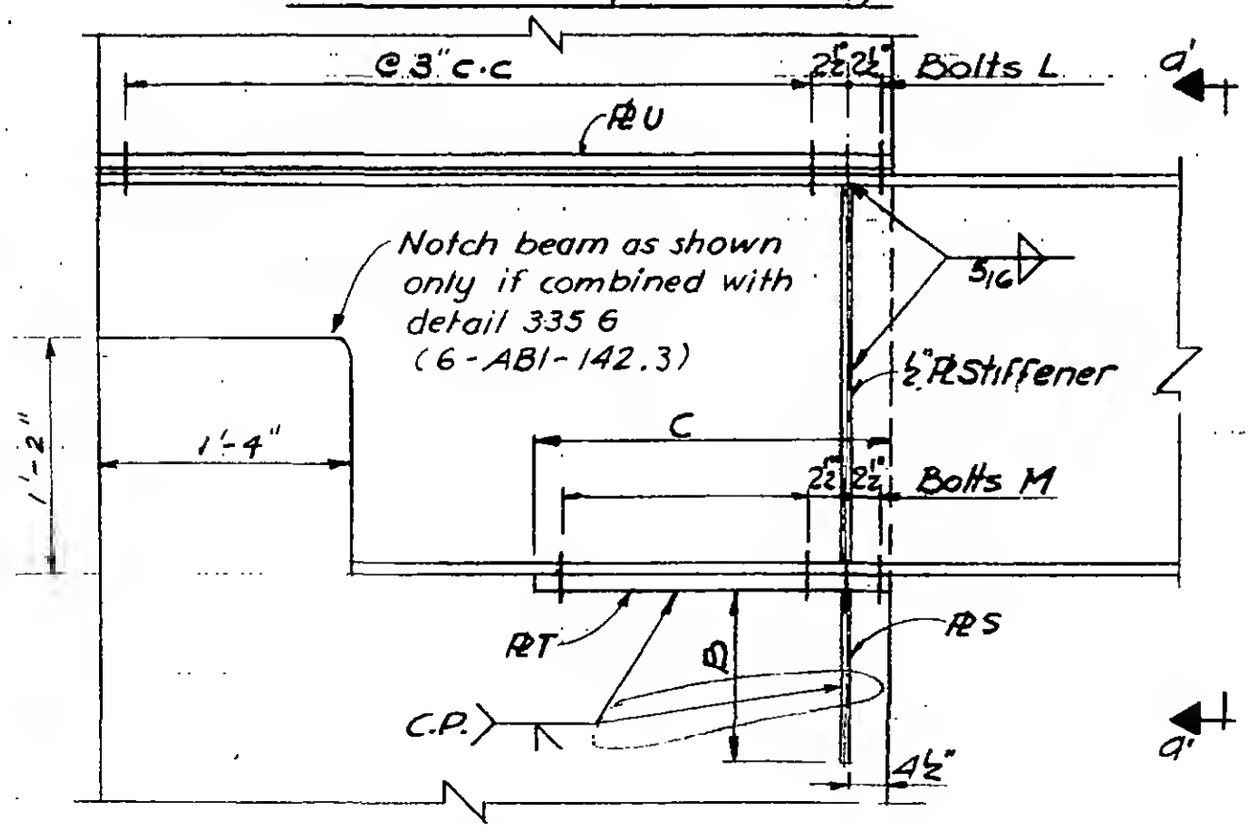

Section b-b, 202 D

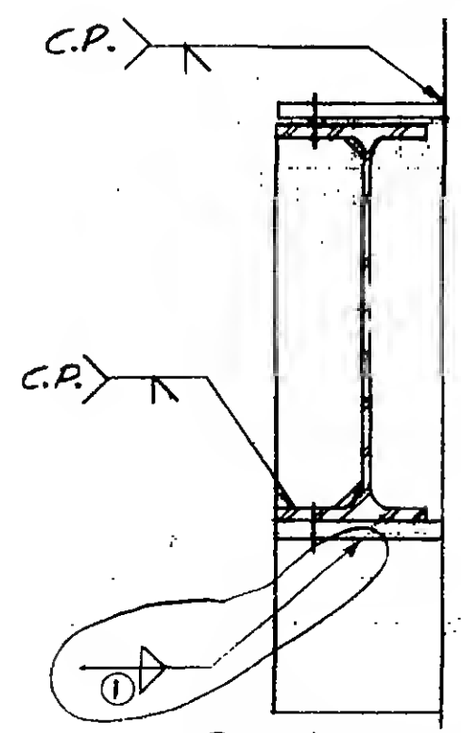

Section a'-a'

6-AB1-5.2

SKILLING - HELLE - CHRISTIANSEN - ROBERTSON Structural & Civil Engineers

PROJECT: THE WORLD TRADE CENTER | TITLE: CONNECTION DETAIL 202E & F | DATE: 9-15-67

REVISIONS
10-2-67
11-10-67

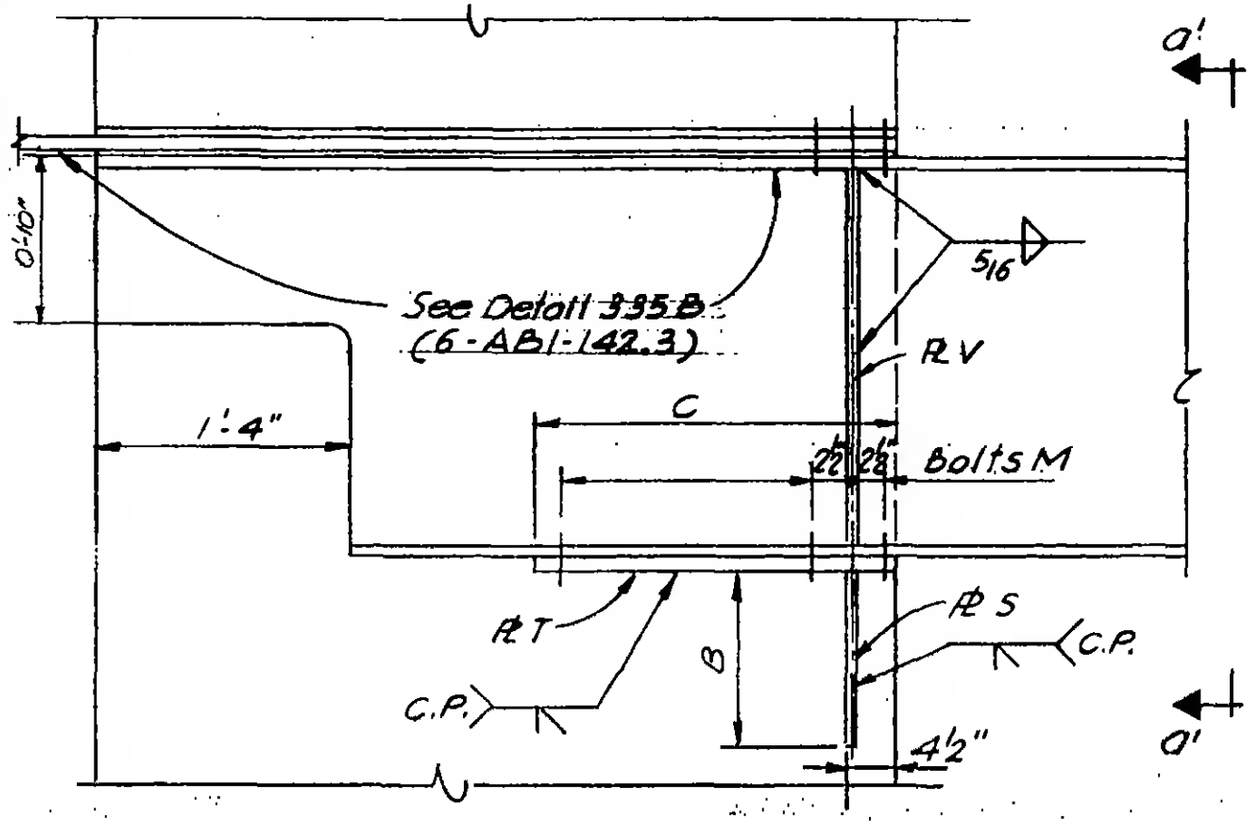

Section b-b, 202E & F
(See dwg. 6-AB1-5 for plan)

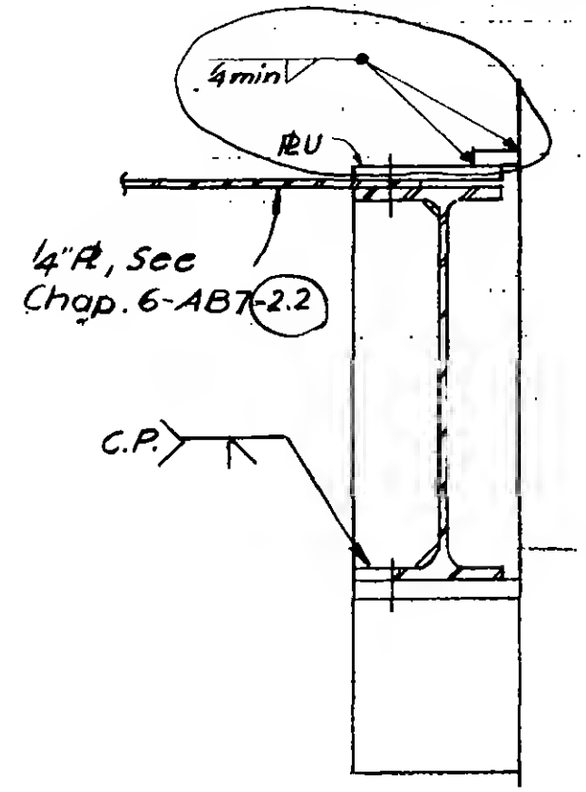

Section a'-a'

6-AB1-5.3

SKILLING - HELLE - CHRISTIANSEN - ROBERTSON Structural & Civil Engineers

PROJECT: THE WORLD TRADE CENTER | TITLE: SCHEDULE FOR DETAIL 202 6 | DATE: 12-21-67

REVISIONS

REF. DWG.	6-AB1-5
	202 6
PLATES	
P	1"
Q	1"
R	3/4"
S	—
T	—
U	—
DIMENSIONS	
A	0'-10½"
B	—
BOLTS	
L	5 - 7/8" ϕ
M	—
WELDS	
1	—

Check

LICENSED PROFESSIONAL ENGINEER
LESLIE E. ROBERTSON
No. 34360
UNIVERSITY OF THE STATE OF NEW YORK

6-AB1-5.4

SKILLING - HELLE - CHRISTIANSEN - ROBERTSON Structural & Civil Engineers

PROJECT WORLD TRADE CENTER | TITLE CONNECTION DETAIL 203A | DATE 5-22-67

REVISIONS

9-15-67

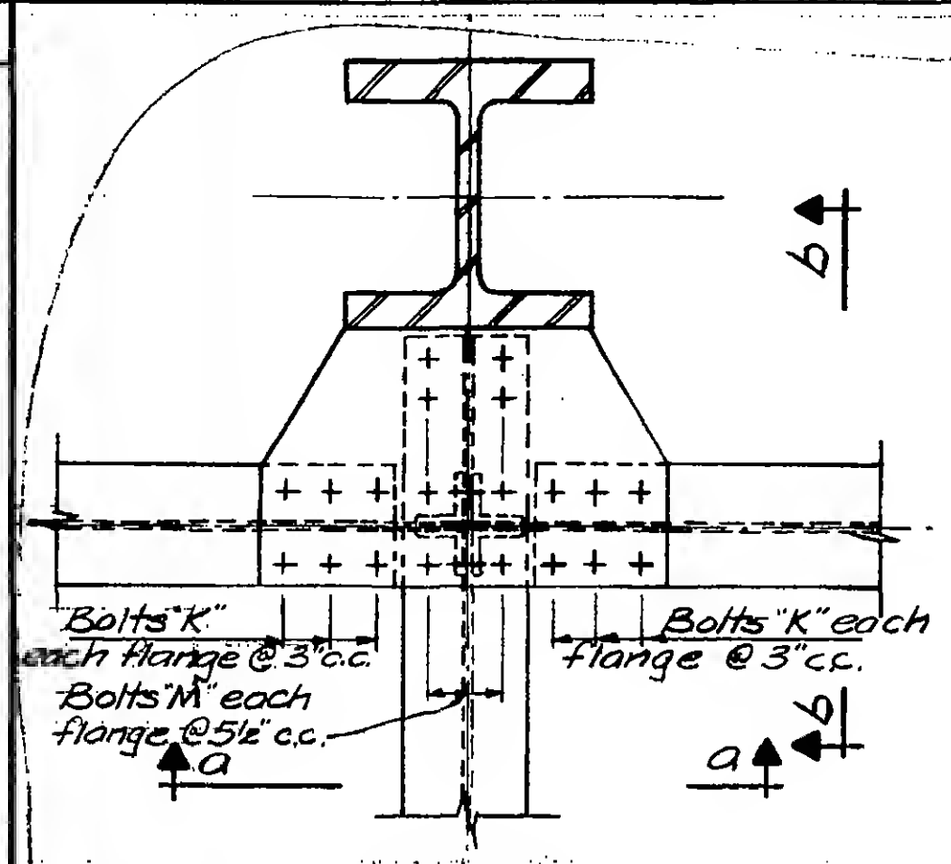

PLAN

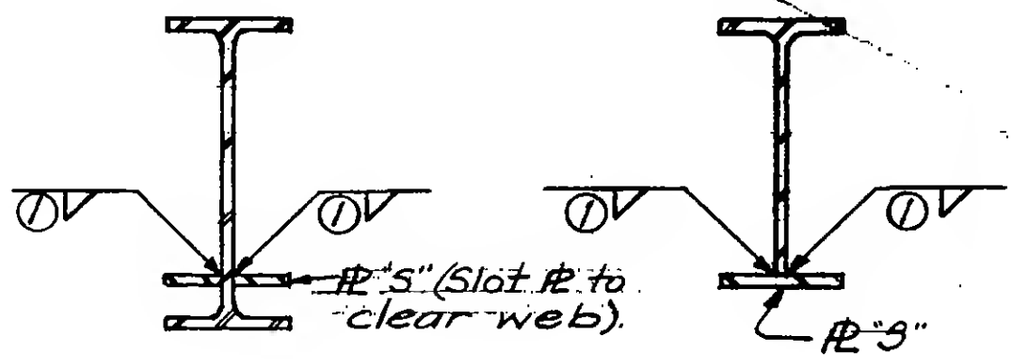

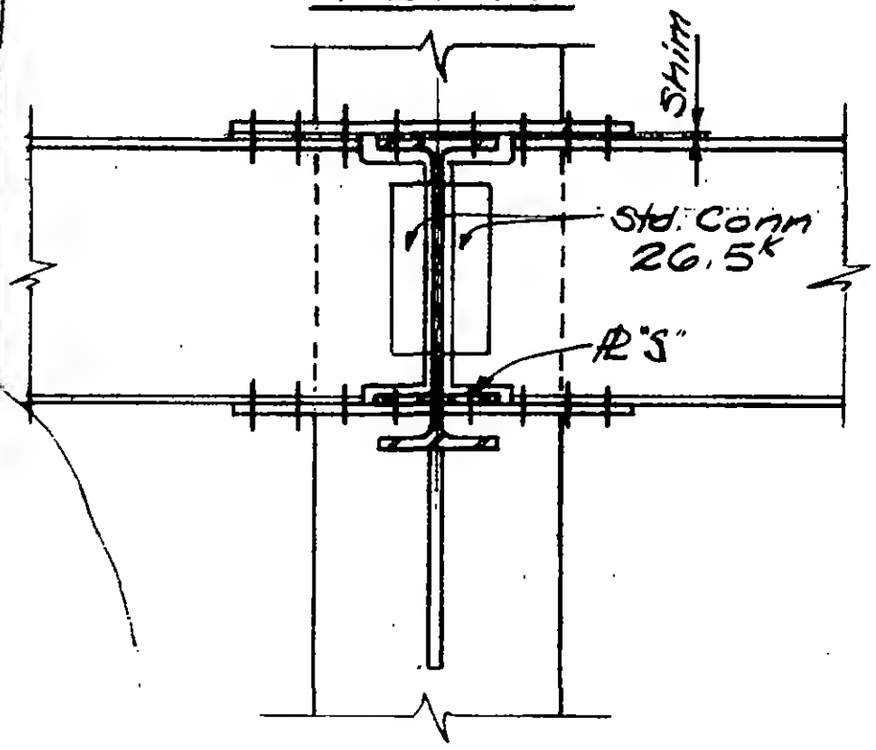

Section a-a

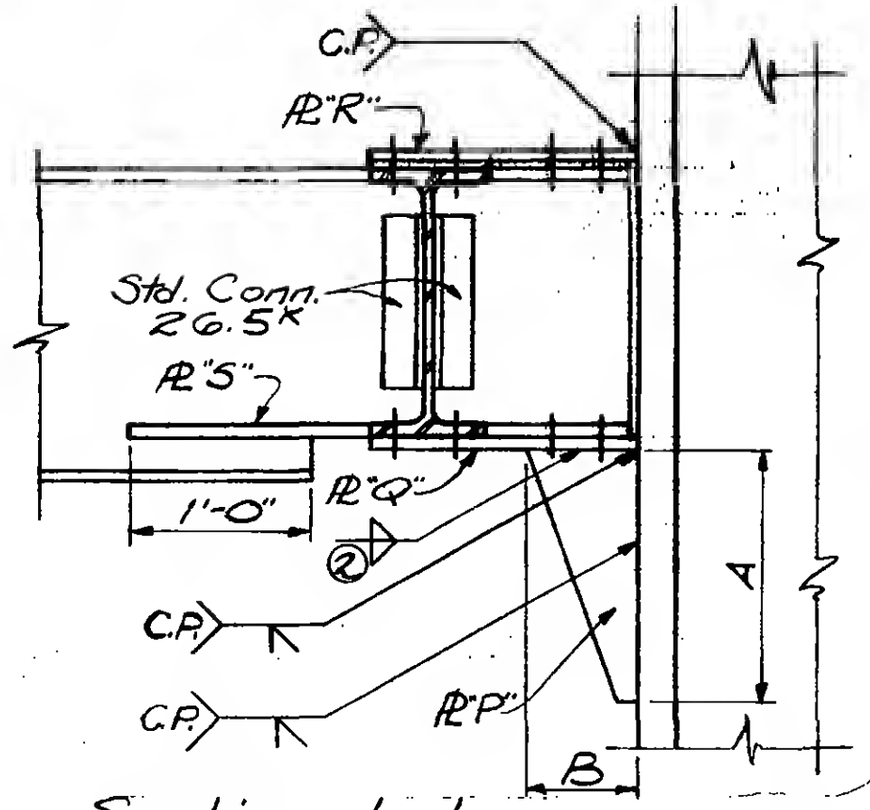

Section b-b

6-AB1-6

SKILLING - HELLE - CHRISTIANSEN - ROBERTSON Structural & Civil Engineers

PROJECT THE WORLD TRADE CENTER | TITLE SCHEDULE FOR DETAIL 203A | DATE 9-15-67

REVISIONS

	203 A
PLATES	
P	3/4"
Q	3/4"
R	1/2"
S	8" x 5/8"
DIMENSIONS	
A	1'-4"
B	0'-9"
BOLTS	
K	6-3/4"Φ
M	8-3/4"Φ
WELDS	
1	3/8
2	5/16

G-AB1-G.1

SKILLING - HELLE - CHRISTIANSEN - ROBERTSON Structural & Civil Engineers

PROJECT THE WORLD TRADE CENTER | TITLE CONNECTION DETAIL 203 B, C | DATE 10-5-67

REVISIONS

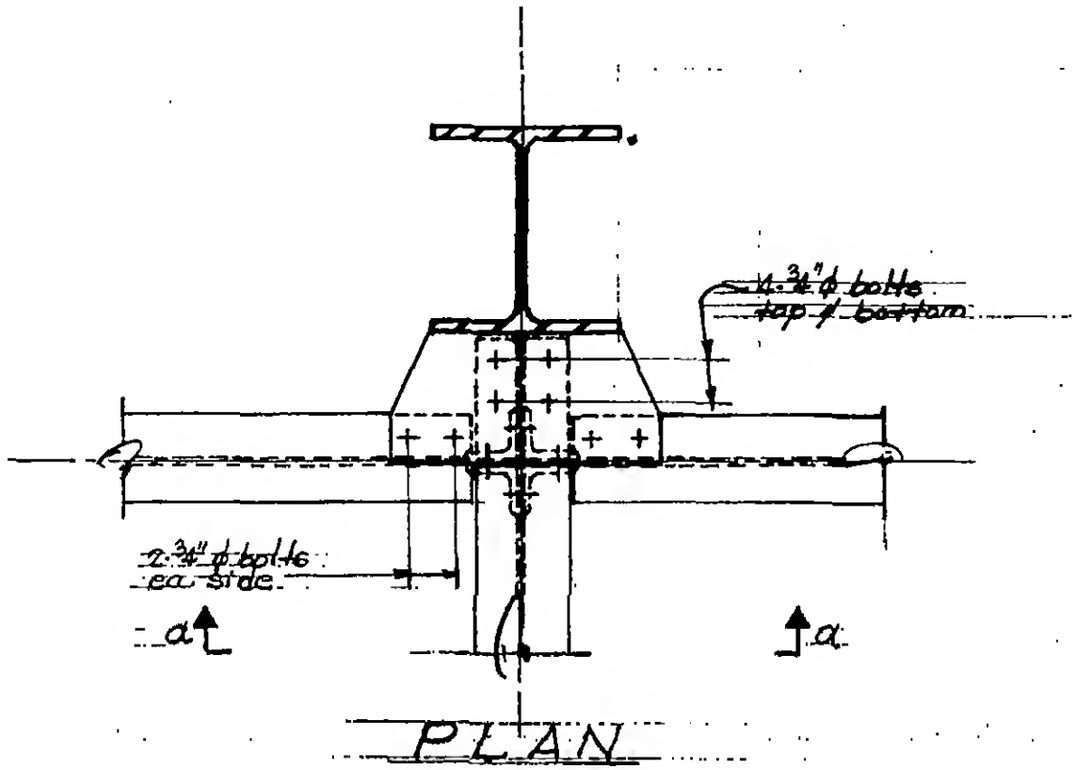

PLAN

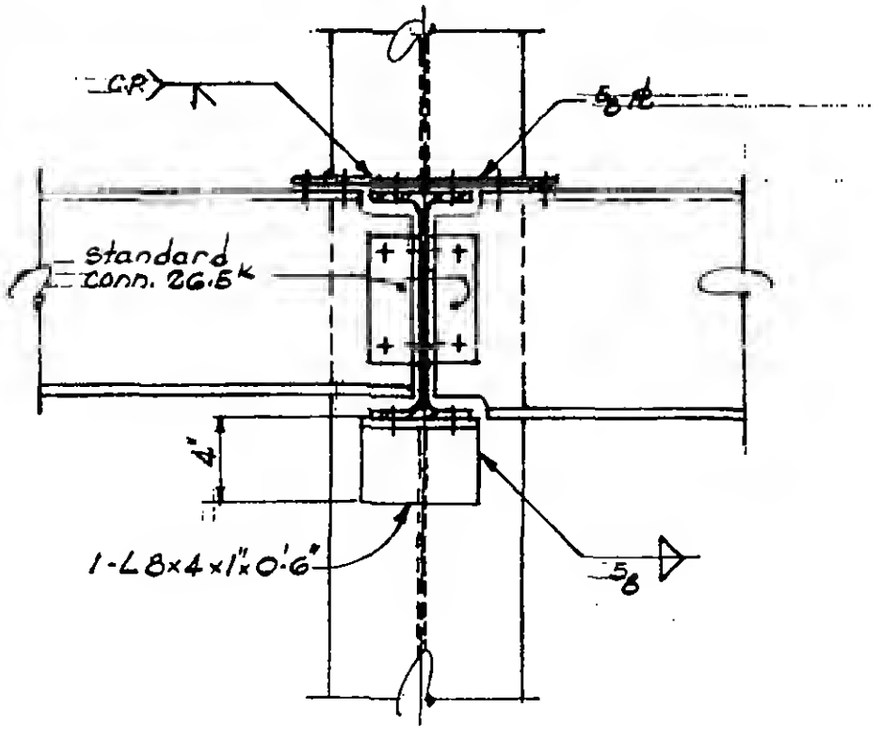

Section a-a (203 B only)

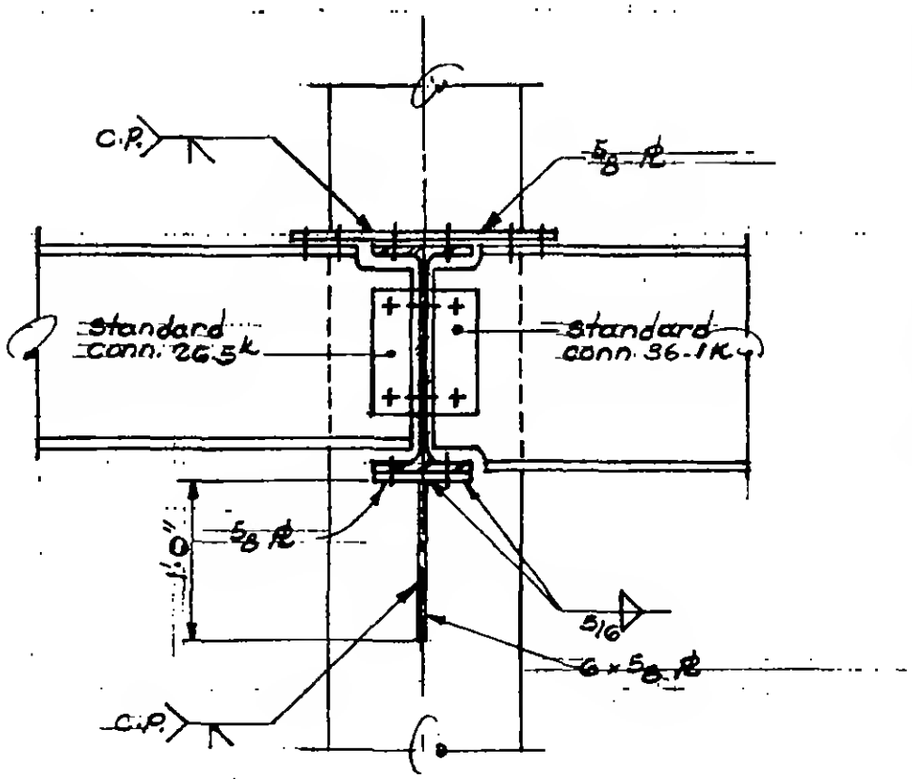

Section a-a (203 C only)

G-AB1-6.2

LICENSED PROFESSIONAL ENGINEER LESLIE E. ROBERTSON No. 34360 UNIVERSITY OF THE STATE OF NEW YORK

SKILLING, HELLE, CHRISTIANSEN, ROBERTSON — Structural & Civil Engineers

PROJECT: THE WORLD TRADE CENTER | TITLE: CONNECTION DETAIL 203D | DATE: 9/30/69

REVISIONS

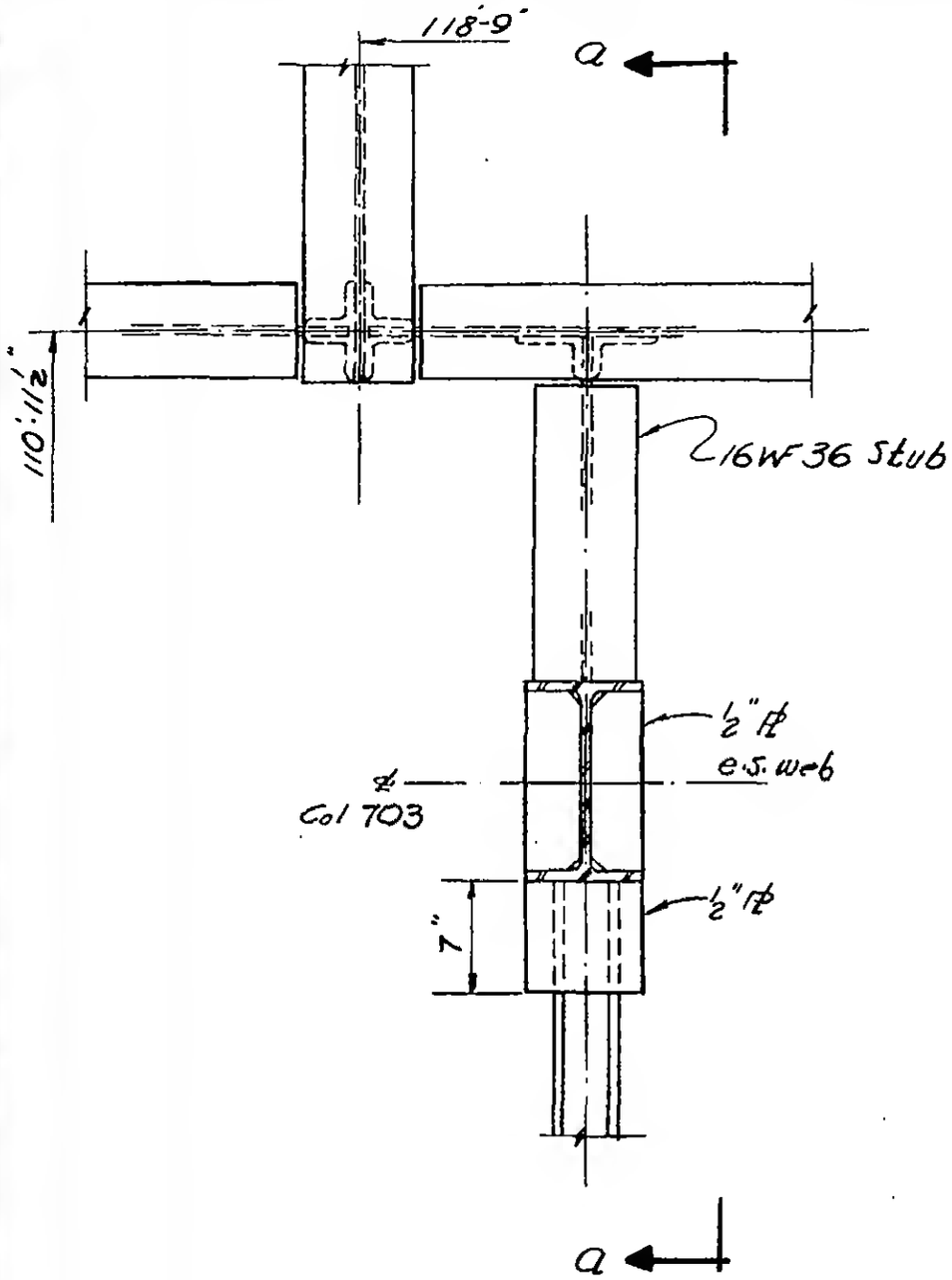

PLAN

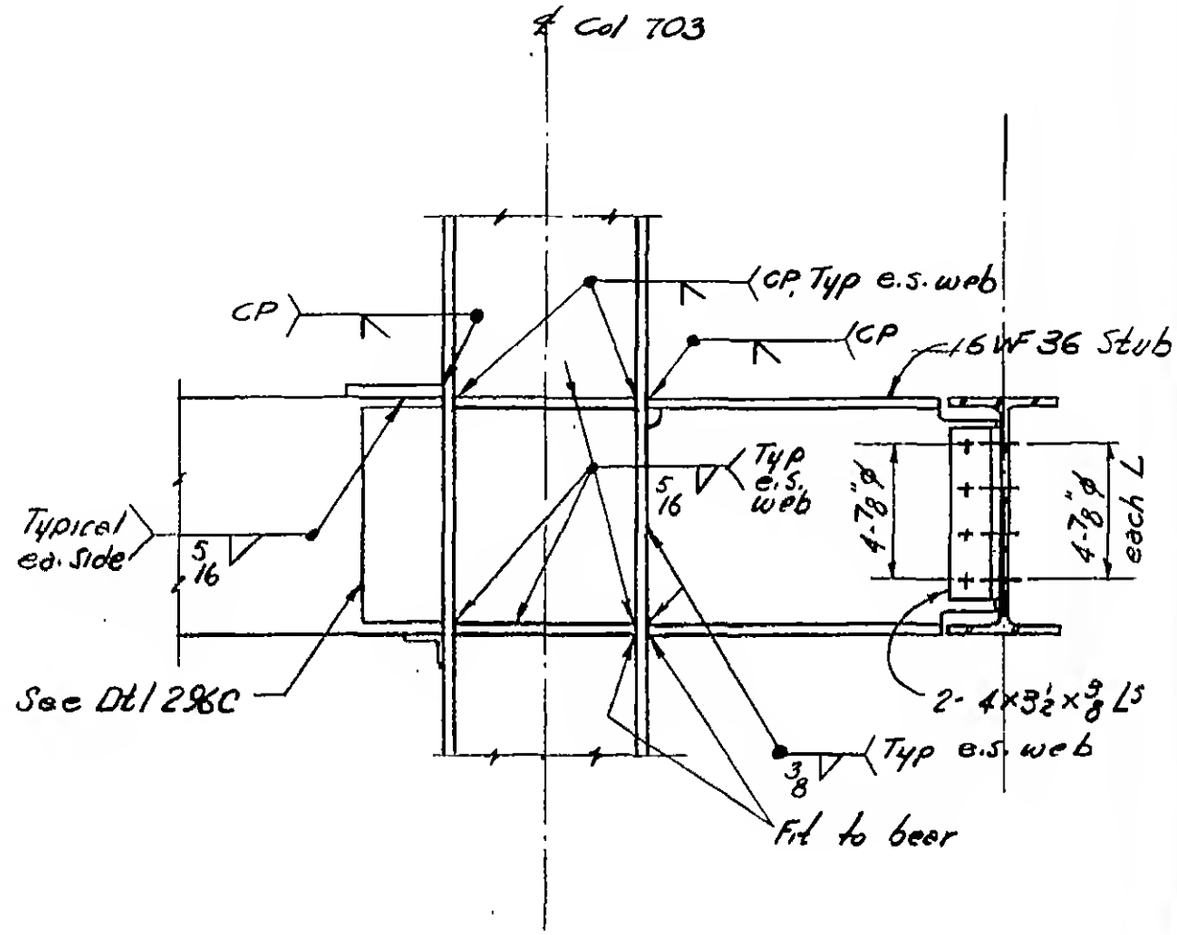

Section aa

DESIGNED

DRAWN

REVIEWED

6-AB1-6.3

WORTHINGTON, SKILLING, HELLE & JACKSON — Civil & Structural Engineers

PROJECT: THE WORLD TRADE CENTER | TITLE: CONNECTION DETAIL 204 A, B, C | DATE: 6-5-67

REVISIONS
10-2-67
10-5-67

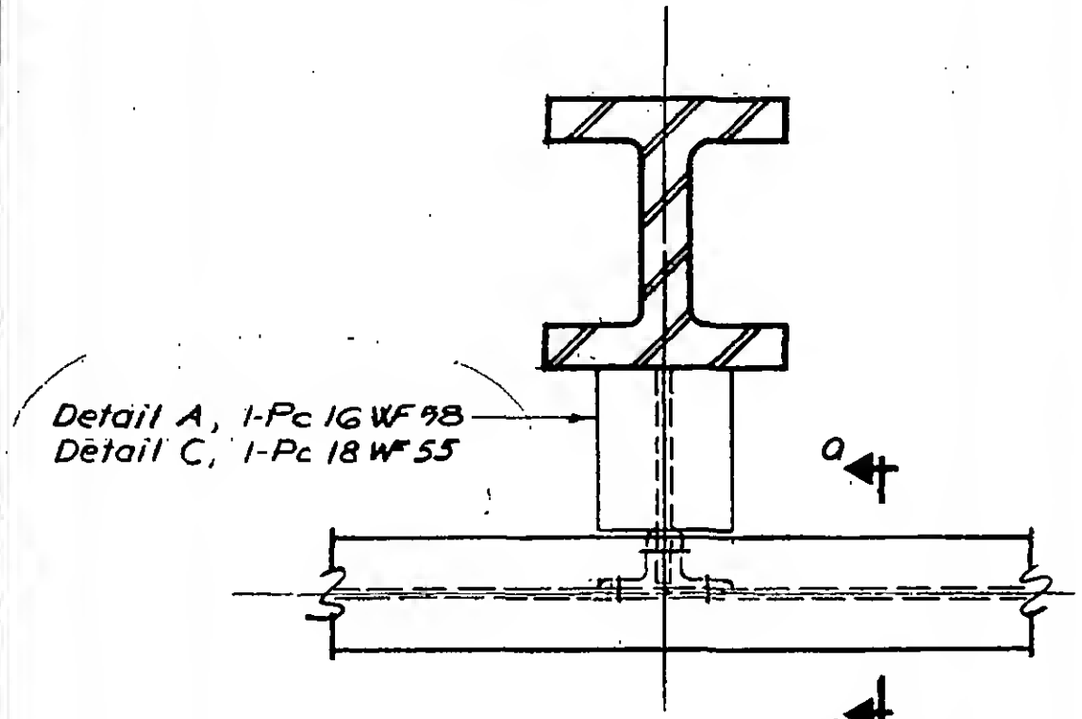

Plan
Details 204 A,C

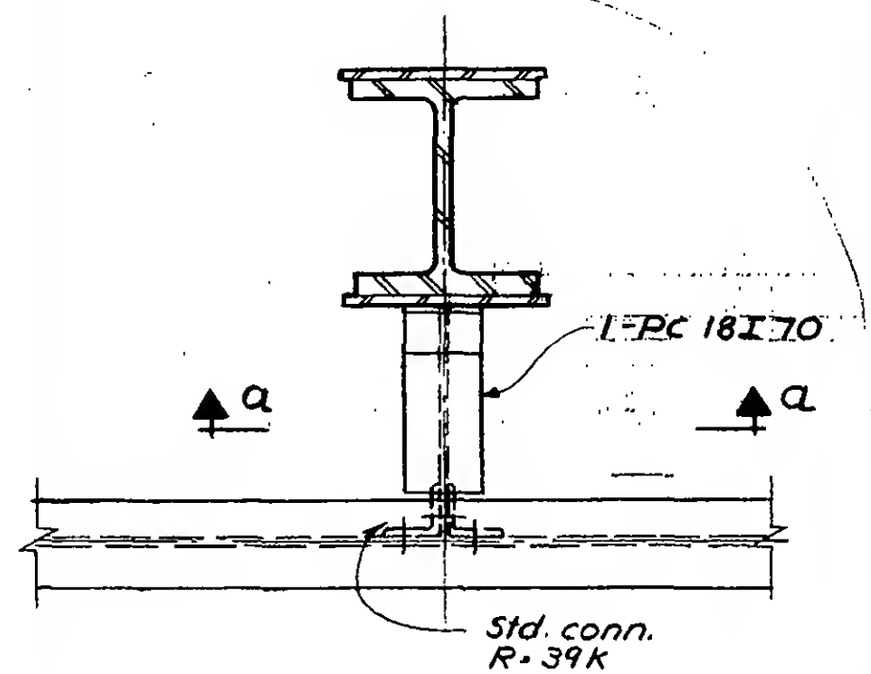

Plan
Detail 204B

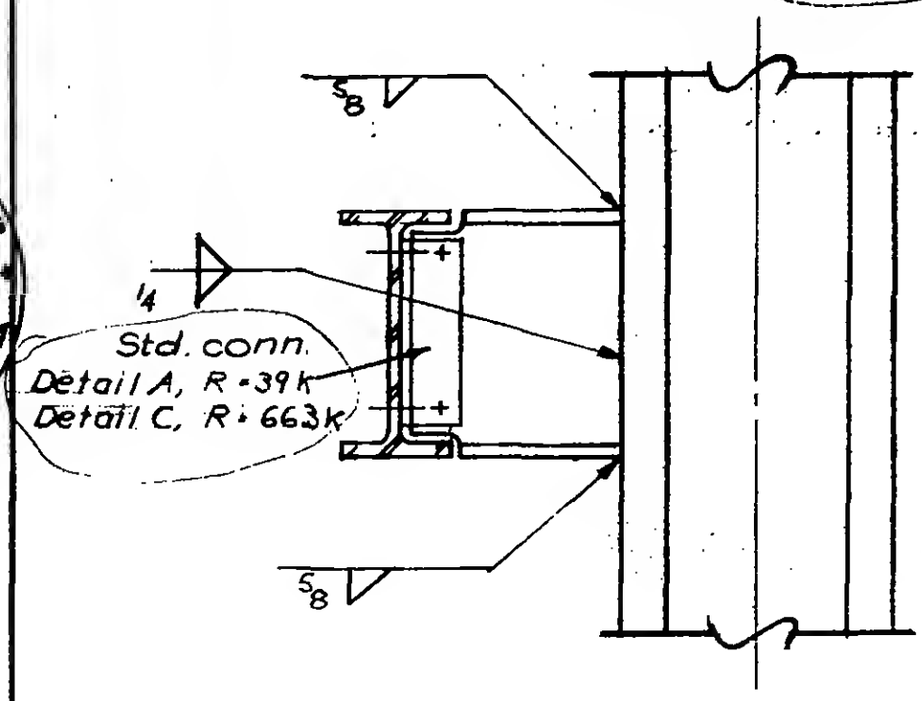

Section a-a

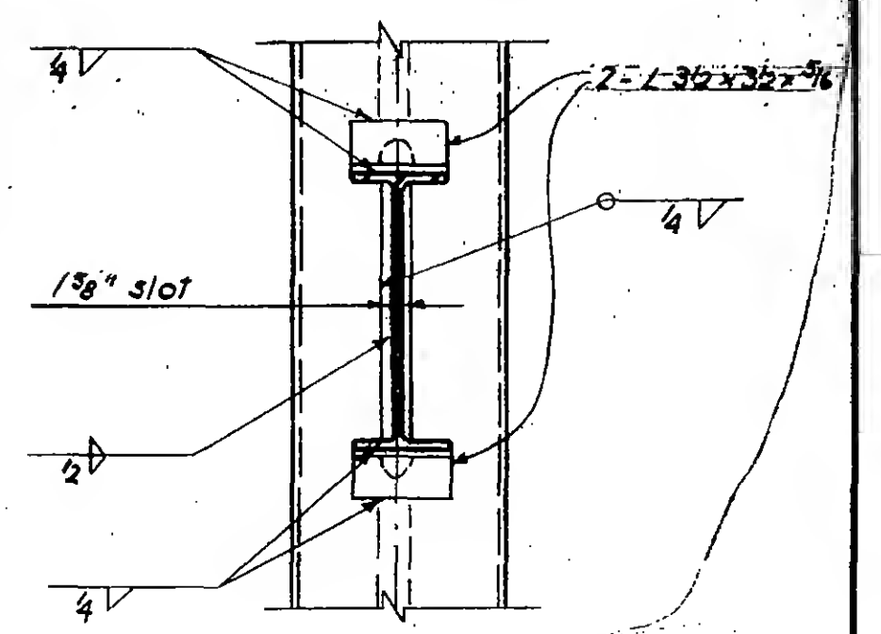

Section a-a

6-AB1-7

LICENSED PROFESSIONAL ENGINEER
LESLIE E. ROBERTSON
No. 34360
UNIVERSITY OF THE STATE OF NEW YORK

SKILLING - HELLE - CHRISTIANSEN - ROBERTSON Structural & Civil Engineers

PROJECT: THE WORLD TRADE CENTER | TITLE: CONNECTION DETAIL 204 F | DATE: 12-21-67

REVISIONS

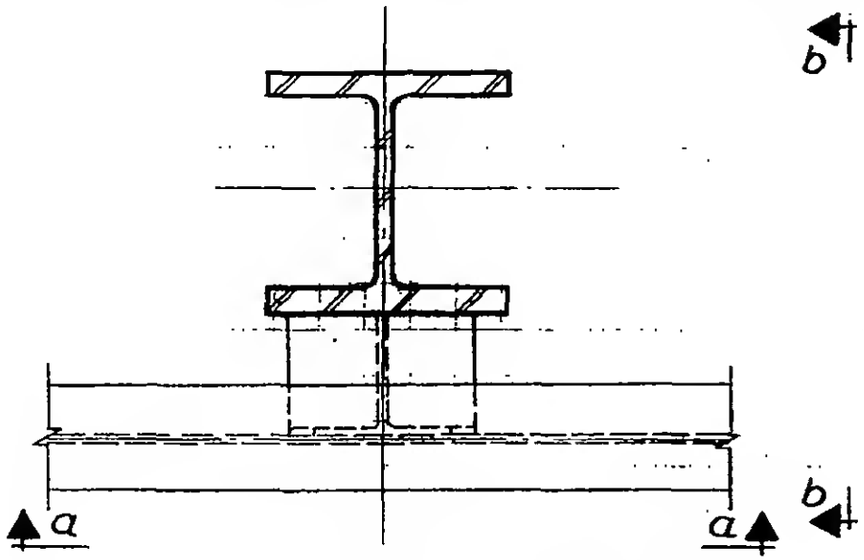

Plan

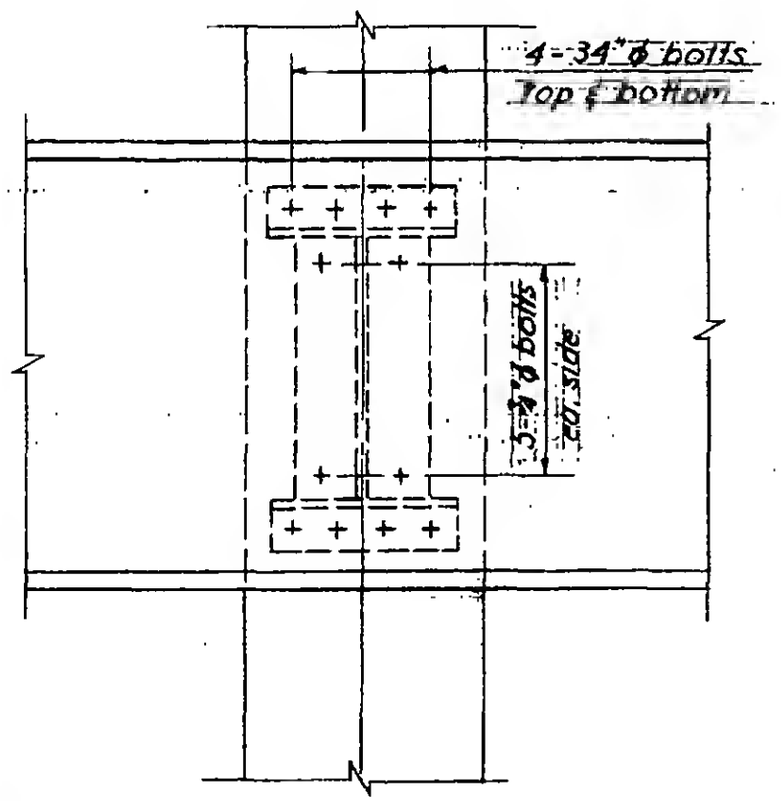

Section a-a

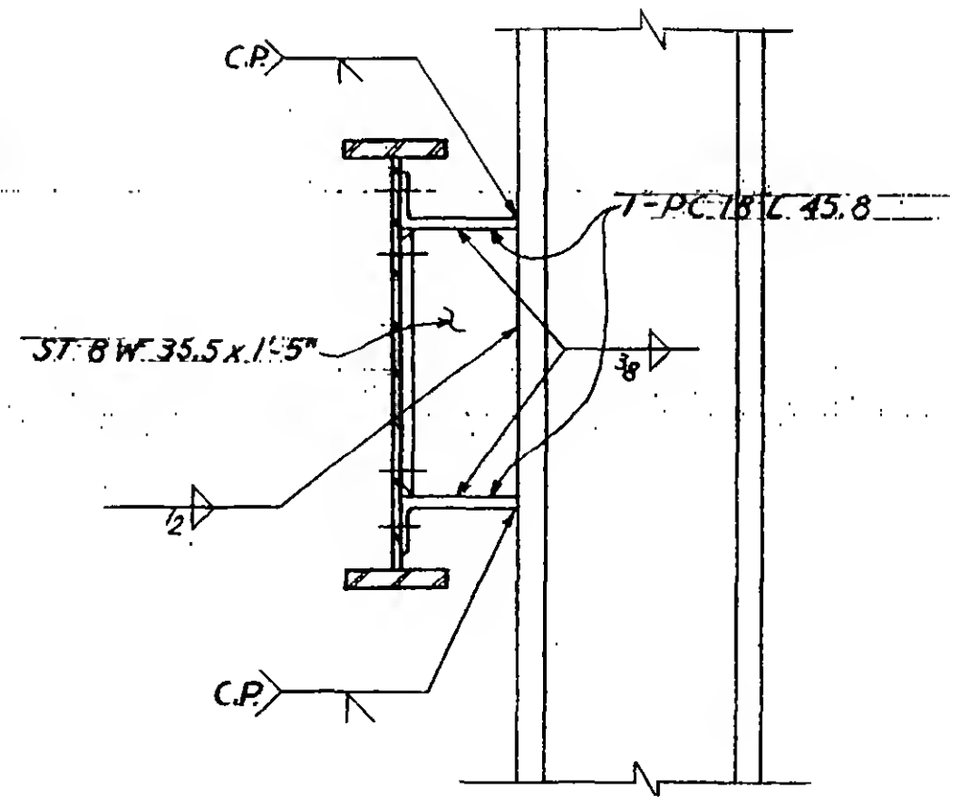

Section b-b

LICENSED PROFESSIONAL ENGINEER
LESLIE E. ROBERTSON
No. 34360
UNIVERSITY OF THE STATE OF NEW YORK

6-AB1-7.1

WORTHINGTON, SKILLING, HELLE & JACKSON — Civil & Structural Engineers

PROJECT: THE WORLD TRADE CENTER | TITLE: CONNECTION DETAIL 205 A, B, C, D, F, G, I, Q | DATE: 5-9-67

REVISIONS
7-28-67
8-5-67
10-2-67

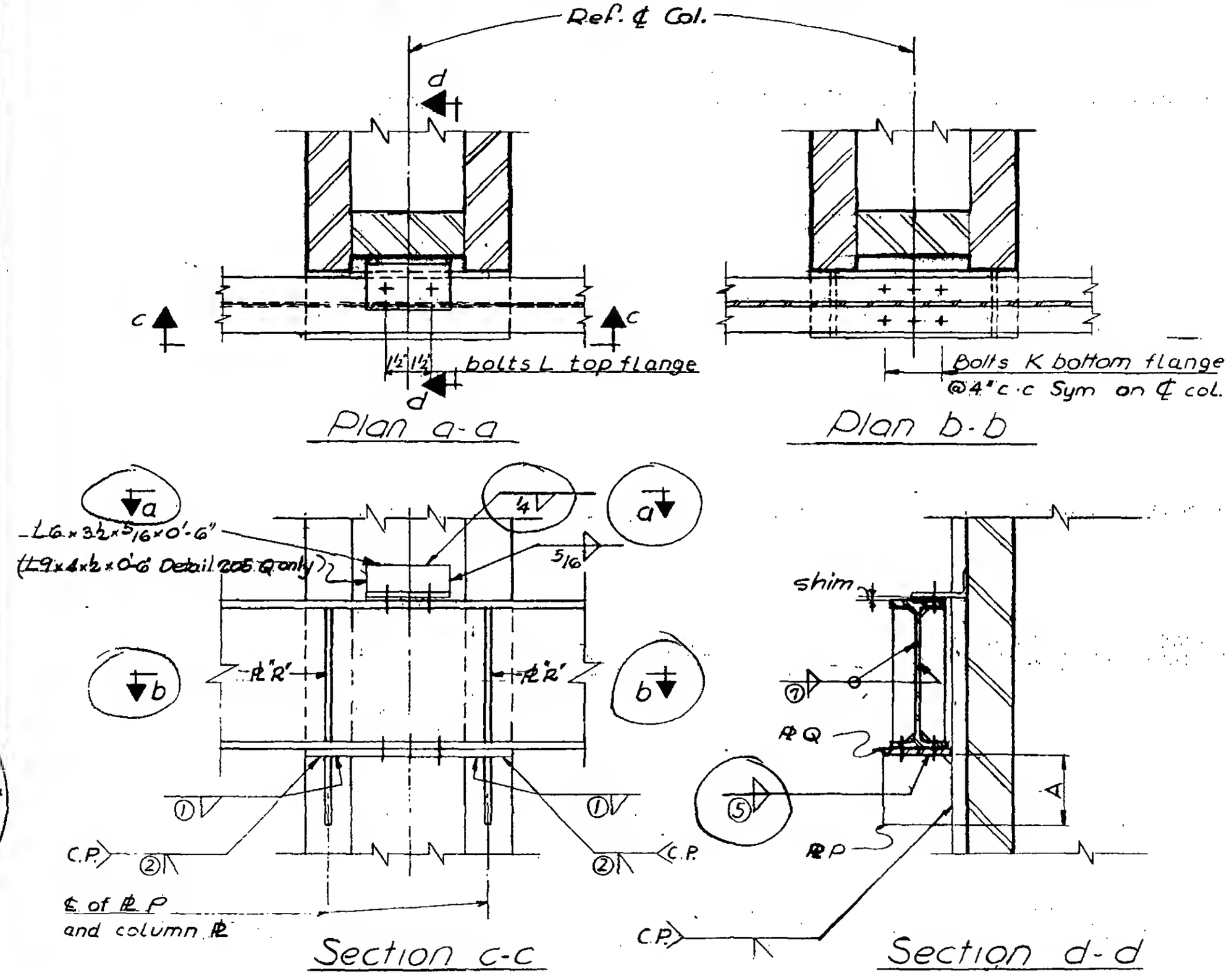

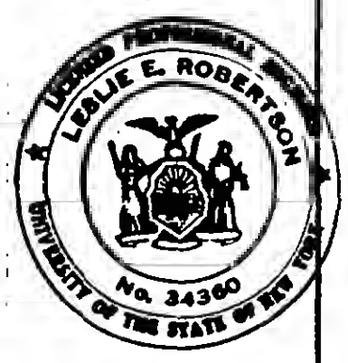

6-AB1-9

WORTHINGTON, SKILLING, HELLE & JACKSON — Civil & Structural Engineers

PROJECT: THE WORLD TRADE CENTER | TITLE: CONNECTION DETAIL 205-E | DATE: 7-28-67

REVISIONS

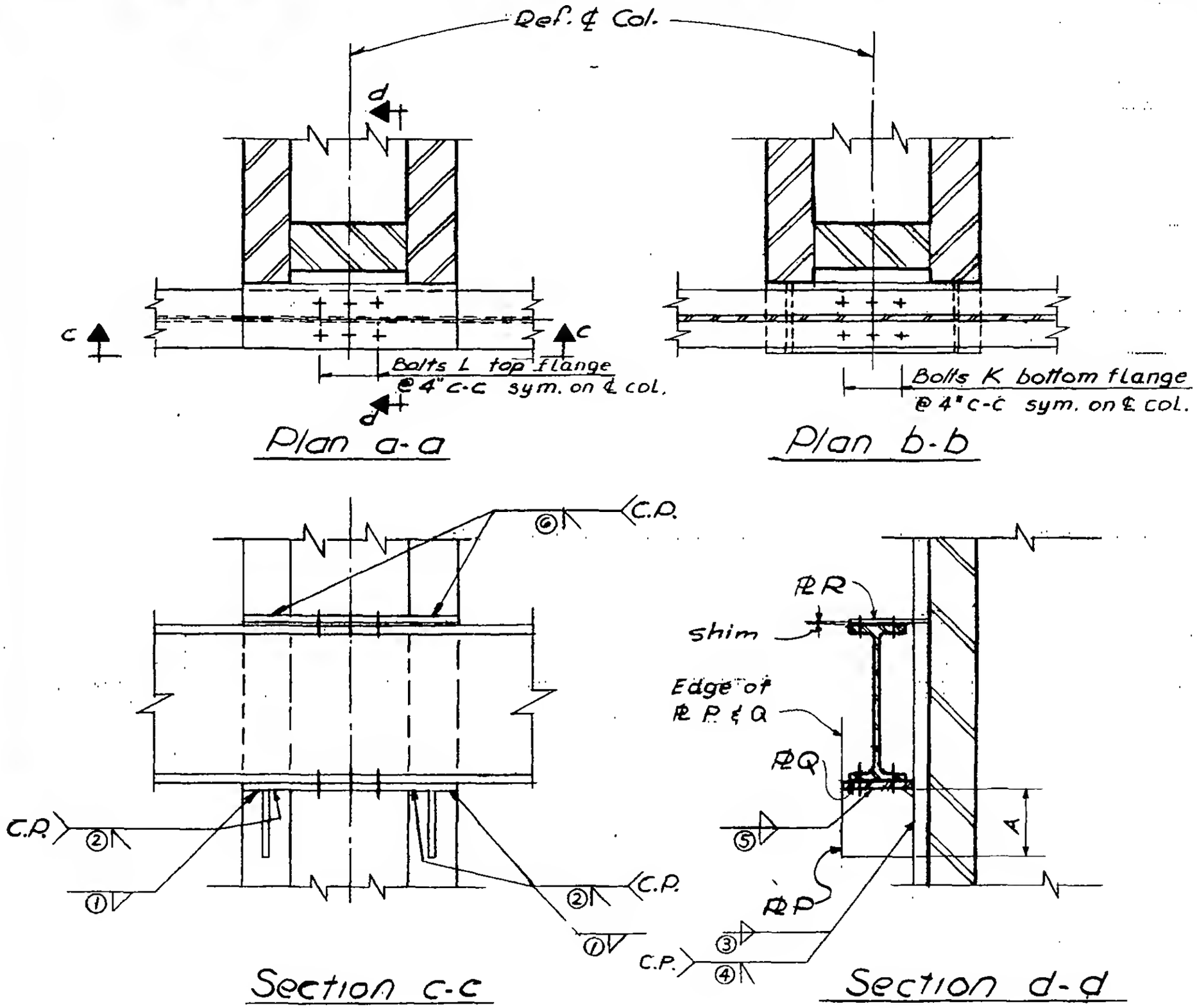

6-AB1-9.1

SKILLING - HELLE - CHRISTIANSEN - ROBERTSON Structural & Civil Engineers

PROJECT: THE WORLD TRADE CENTER | TITLE: SCHEDULE FOR DETAIL 205 A-F | DATE: 7-28-67

REVISIONS

REF. DWGS.	6-AB1-9	6-AB1-9	6-AB1-9	6-AB1-9	6-AB1-9.1	6-AB1-9
	205 A	205 B	205 C	205 D	205 E	205 F
PLATES						
P	1"	1"	1/2"	1/2"	1"	5/8"
Q	1"	1"	1/2"	1"	1"	1"
R	—	—	—	—	1"	—
DIMENSIONS						
A	1'-4"	1'-4"	1'-4"	1'-4"	1'-4"	1'-0"
BOLTS						
K	4 - 3/4" φ	6 - 7/8" φ	4 - 3/4" φ	6 - 7/8" φ	6 - 7/8" φ	6 - 3/4" φ
L	2 - 3/4" φ	2 - 3/4" φ	2 - 3/4" φ	2 - 3/4" φ	6 - 7/8" φ	2 - 3/4" φ
WELDS						
1	—	—	—	—	—	—
2	C.P.	C.P.	C.P.	C.P.	C.P.	C.P.
3	1/2	1/2	—	—	1/2	—
4	—	—	C.P.	C.P.	—	C.P.
5	3/8	3/8	5/16	5/16	3/8	5/16
6	—	—	—	—	C.P.	—

6-AB1-9.2

SKILLING - HELLE - CHRISTIANSEN - ROBERTSON Structural & Civil Engineers

PROJECT: THE WORLD TRADE CENTER | TITLE: SCHEDULE FOR DETAIL 205 6, I, H, J, K, L | DATE: 7-28-67

REVISIONS
8-5-67
10-2-67
10-31-67

REF. DWGS.	6-AB1-9	6-AB1-9	6-AB1-9.4	6-AB1-9.5	6-AB1-9.5	6-AB1-9.5
	205 6	205 I	205 H	205 J	205 K	205 L
PLATES						
P	1"	1/2"	1/2"	3/4"	7/8"	1"
Q	1 1/4"	1/2"	1"	3/4"	7/8"	1"
R	—	—	1"	1/2"	1/2"	1/2"
S	—	—	—	—	5/8"	5/8"
DIMENSIONS						
A	1'-4"	1'-2"	1'-2"	1'-3"	1'-6"	1'-7"
B	—	—	—	—	0'-9" min	0'-9" min
BOLTS						
K	6 - 3/4" ϕ	4 - 3/4" ϕ	12 - 1" ϕ	12 - 7/8" ϕ	12 - 7/8" ϕ	12 - 7/8" ϕ
L	2 - 3/4" ϕ	2 - 3/4" ϕ	12 - 1" ϕ	—	4 - 7/8" ϕ	4 - 7/8" ϕ
WELDS						
1	—	—	C.P.	5/16	5/16	5/16
2	C.P.	C.P.	C.P.	—	3/8"	3/8"
3	—	—	—	—	—	—
4	C.P.	C.P.	—	—	—	—
5	3/8	1/4	—	—	—	—
6	—	—	—	—	—	—

LICENSED PROFESSIONAL ENGINEER
LESLIE E. ROBERTSON
No. 34360
UNIVERSITY OF THE STATE OF NEW YORK

6-AB1-9.3

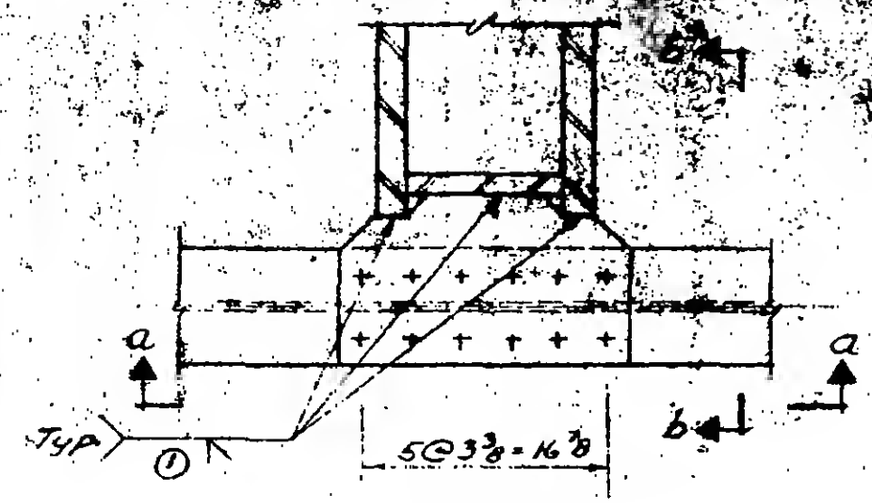

Plan

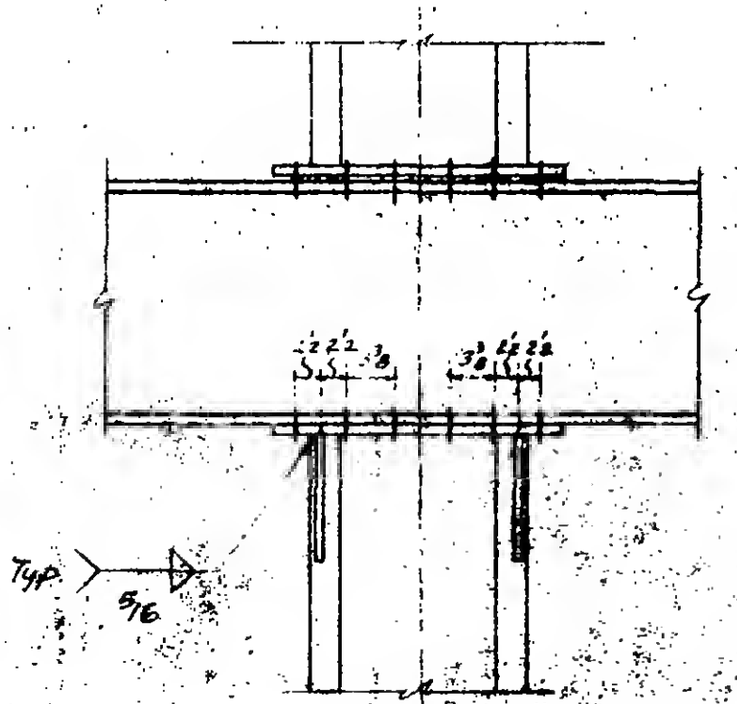

Section a-a

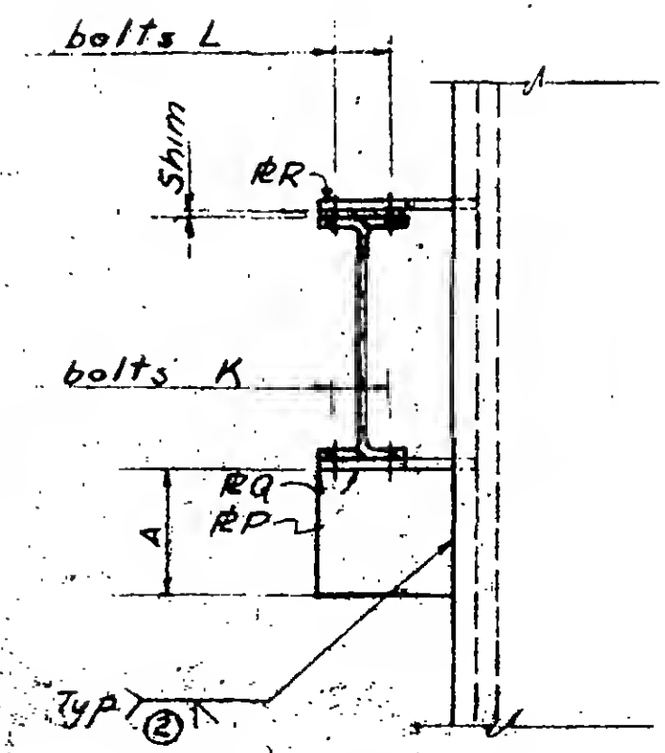

Section b-b

6-AB1.-9.4

LICENSED PROFESSIONAL ENGINEER
LESLIE E. ROBERTSON
No. 34360
CITY OF THE STATE OF NEW YORK

SKILLING - HELLE - CHRISTIANSEN - ROBERTSON Structural & Civil Engineers

PROJECT THE WORLD TRADE CENTER | TITLE CONNECTION DETAIL 205 J, K, L | DATE 10-2-67

REVISIONS

10-31-67

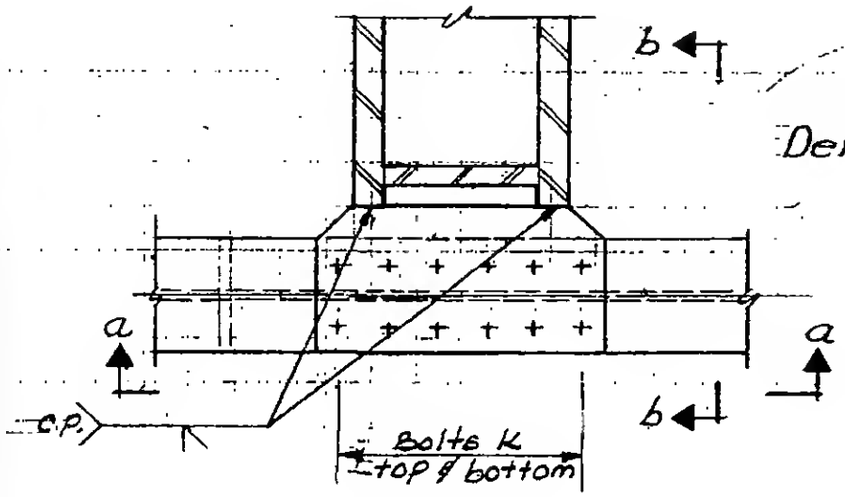

Plan

Details K & L: See G-AB5-96 for bracing elevation

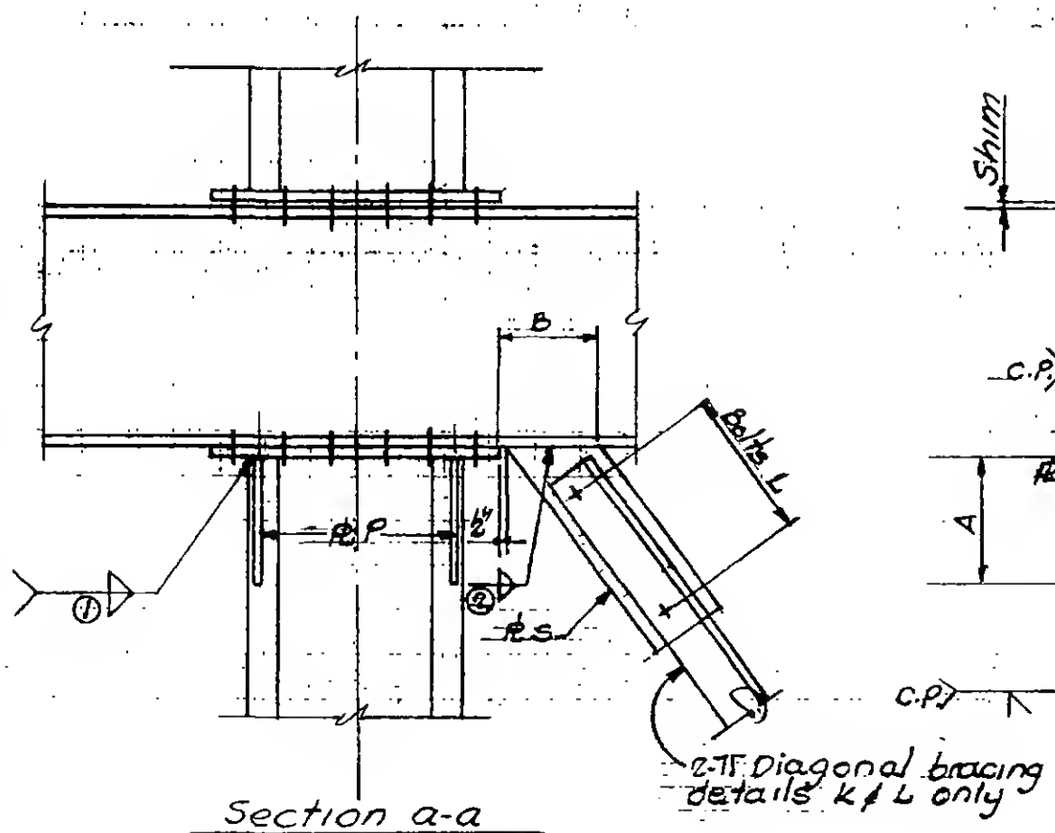

Section a-a

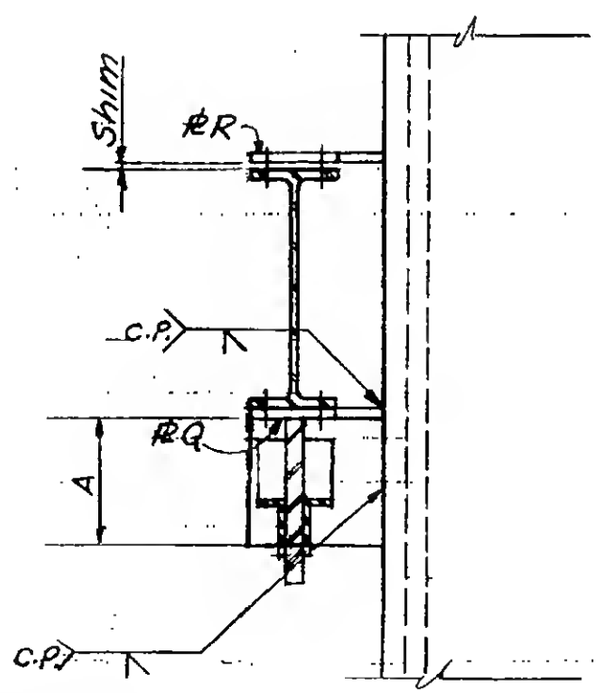

Section b-b

G-AB1-9.5

SKILLING - HELLE - CHRISTIANSEN - ROBERTSON Structural & Civil Engineers

PROJECT THE WORLD TRADE CENTER | TITLE CONNECTION DETAIL 205 M, N, P | DATE 10-2-67

REVISIONS

10-31-67

Details 205 M & P: See G-AB5-96 or G-AB5-99 for bracing elevation.

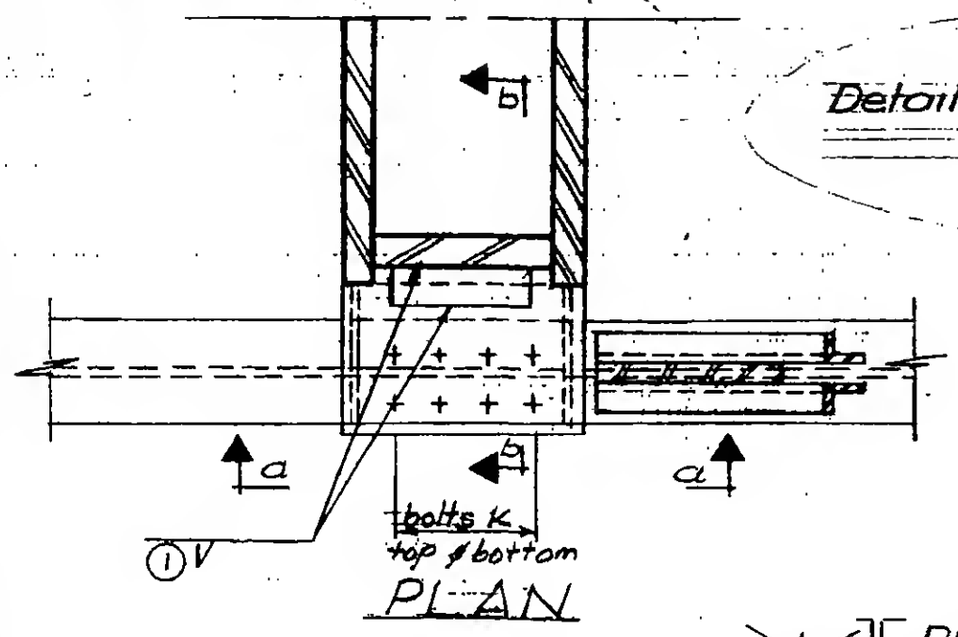

PLAN

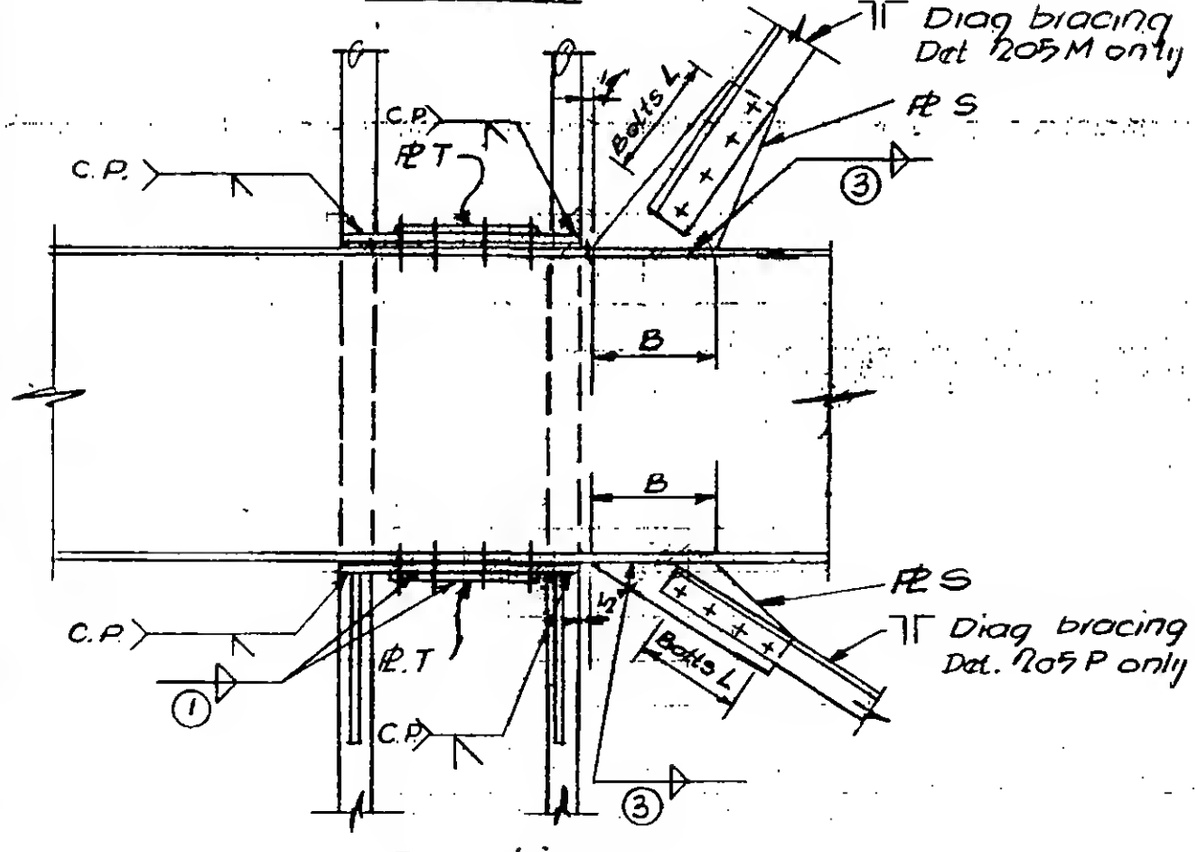

Section a-a

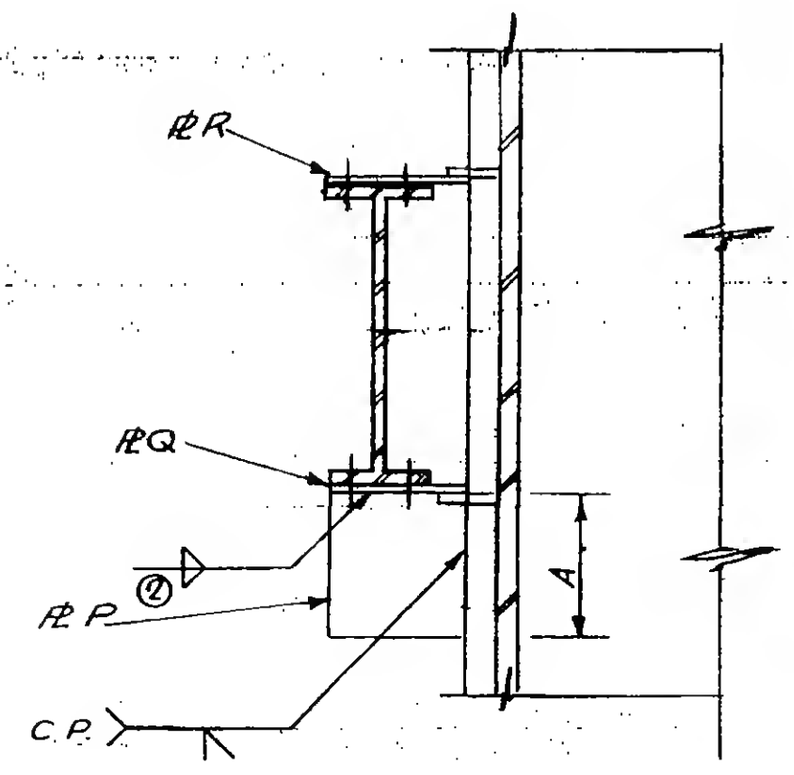

Section b-b

LICENSED PROFESSIONAL ENGINEER
LESLIE E. ROBERTSON
No. 24360
STATE OF NEW YORK

G-AB1-9.6

SKILLING - HELLE - CHRISTIANSEN - ROBERTSON — Structural & Civil Engineers

PROJECT: THE WORLD TRADE CENTER

TITLE: SCHEDULE FOR DETAIL 205 M, N, P, Q, R, S, T

DATE: 10-2-67

REVISIONS

10-31-67

REF. DWG.	G-AB1-9.6	G-AB1-9.6	G-AB1-9.6	G-AB1-9	G-AB1-9.8	G-AB1-9.8
	205M	205N	205P	205Q	205R, S	205T
PLATES						
P	3/4"	5/8"	5/8	1	7/16	1
Q	1"	1"	7/8	1	7/16	1
R	1"	1"	7/8	5/8	—	—
S	5/8"	—	5/8	—	—	—
T	3/4"	3/4"	5/8	—	—	—
BOLTS						
K	8-1 1/8" ϕ A490	8-1 1/8" ϕ A490	8-1" ϕ A490	6-3/4" ϕ	3-3/4" ϕ	4-3/4" ϕ
L	4-7/8" ϕ	—	4-7/8" ϕ	2-3/4" ϕ	2-3/4" ϕ	2-3/4" ϕ
DIMENSIONS						
A	1'-2"	1'-0"	1'-0"	1'-8"	0'-9"	1'-10"
B	0'-9" min	—	0'-9" min	—	—	—
WELDS						
1	5/8	5/8	1/2	—	—	—
2	3/8	3/8	3/8	C.P.	C.P.	C.P.
3	3/8	—	3/8	—	—	—
4	—	—	—	C.P.	C.P.	C.P.
5	—	—	—	5/16	5/16	5/16
6	—	—	—	3/8"	—	—
7	—	—	—	3/8"	—	—

LICENSED PROFESSIONAL ENGINEER
LESLIE E. ROBERTSON
No. 34360
UNIVERSITY OF THE STATE OF NEW YORK

G-AB1-9.7

SKILLING - HELLE - CHRISTIANSEN - ROBERTSON Structural & Civil Engineers

PROJECT: THE WORLD TRADE CENTER | TITLE: CONNECTION DETAIL 205 R, S, T, U, V, W, X, Y | DATE: 10-8-67

REVISIONS

10-31-67

Detail 205X See G-AB5-96 for bracing elevation
Detail 205 V & Y See G-AB5-98 or G-AB5-99 for bracing elevation

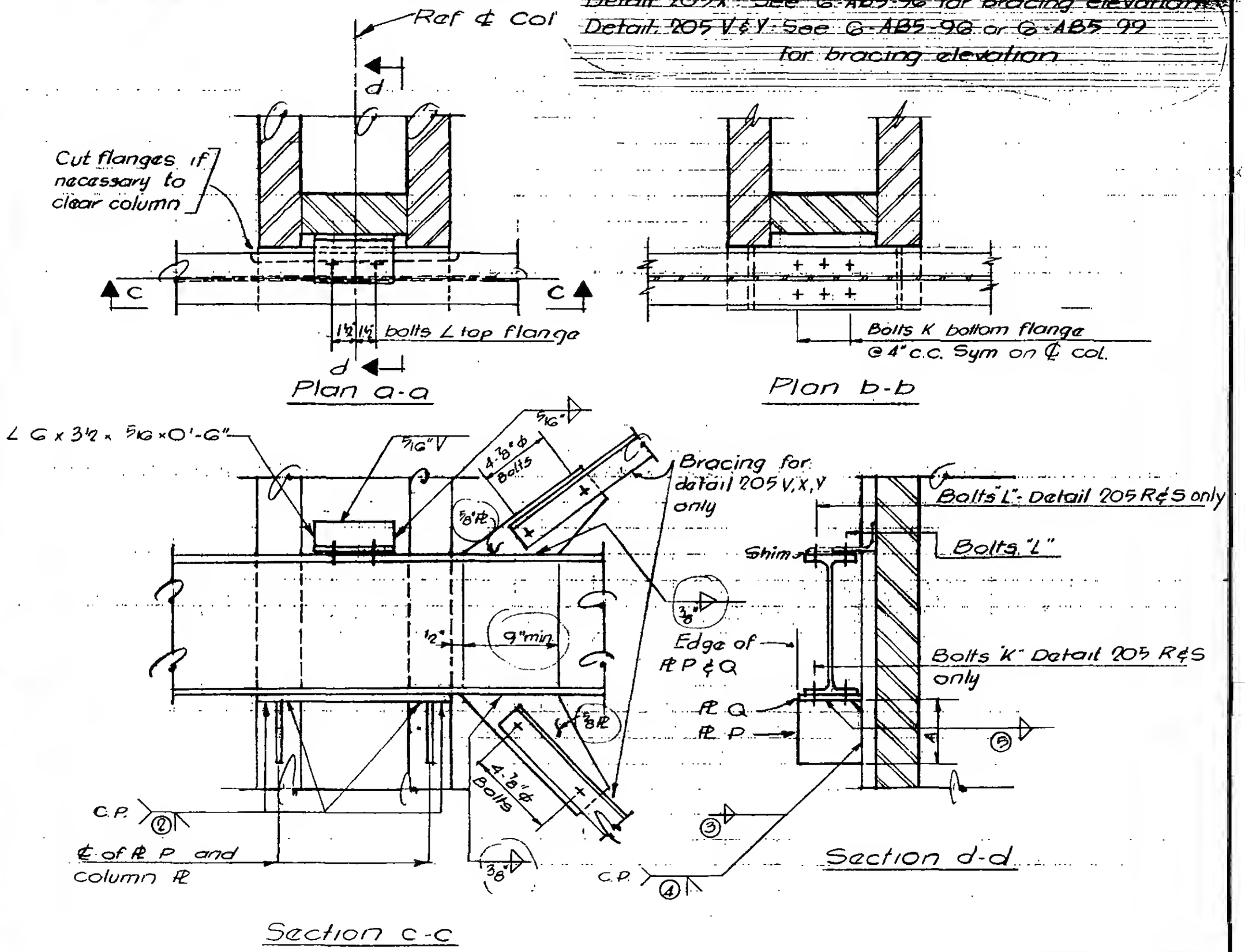

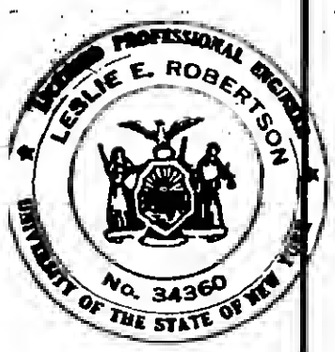

G-AB1-9.8

SKILLING - HELLE - CHRISTIANSEN - ROBERTSON Structural & Civil Engineers

PROJECT: THE WORLD TRADE CENTER | TITLE: SCHEDULE FOR DETAIL 205 U,V,W,X,Y | DATE: 10-2-67

REVISIONS

REF. DWG.	6-AB1-9.8	6-AB1-9.8	6-AB1-9.8	6-AB1-9.8	6-AB1-9.8
	205 U	205 V	205 W	205 X	205 Y
PLATE					
P	3/4"	5/8"	5/8"	3/4"	1 1/4"
Q	3/4"	5/8"	5/8"	3/4"	5/8"
R	—	—	—	—	—
BOLTS					
K	4-3/4" ϕ	4-3/4" ϕ	4-3/4" ϕ	4-3/4" ϕ	4-3/4" ϕ
L	2-3/4" ϕ	2-3/4" ϕ	2-3/4" ϕ	2-3/4" ϕ	2-3/4" ϕ
DIMENSION					
A	1'-3"	1'-2"	1'-0"	1'-3"	1'-9"
WELDS					
1	—	—	—	—	—
2	C.P.	C.P.	C.P.	C.P.	C.P.
3	—	—	—	—	—
4	C.P.	C.P.	C.P.	C.P.	C.P.
5	5/16"	5/16"	5/16"	5/16"	5/16"

LICENSED PROFESSIONAL ENGINEER LESLIE E. ROBERTSON No. 34360 UNIVERSITY OF THE STATE OF NEW YORK

6-AB1-9.9

SKILLING - HELLE - CHRISTIANSEN - ROBERTSON Structural & Civil Engineers

PROJECT THE WORLD TRADE CENTER | TITLE CONNECTION DETAIL 205Z | DATE 2-9-68

REVISIONS

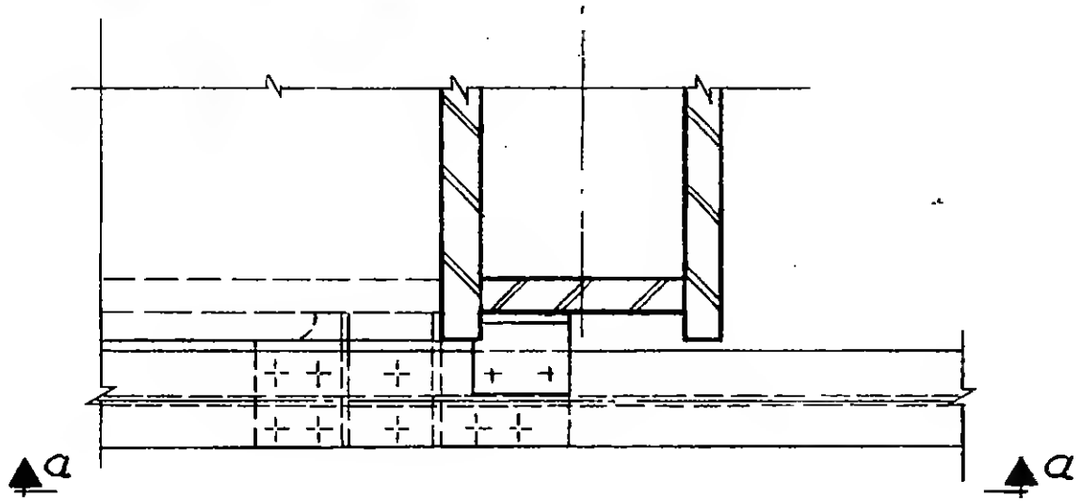

Plan

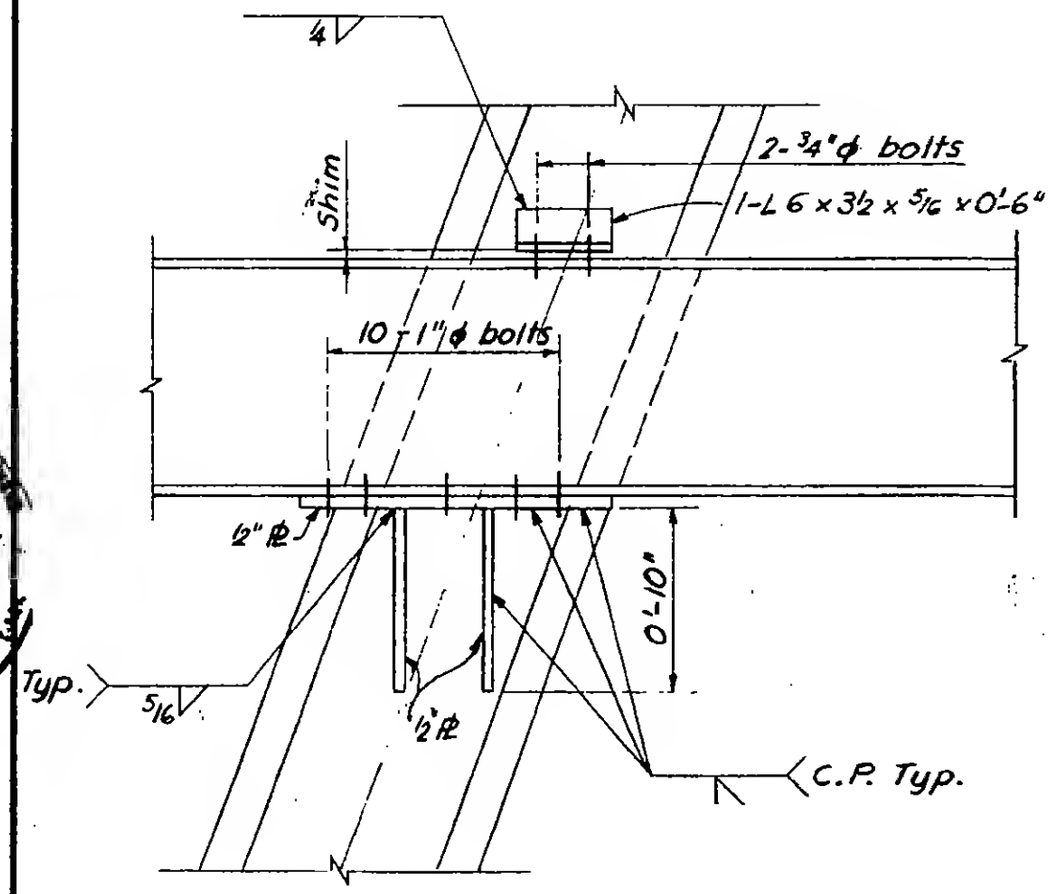

Section a-a

LICENSED PROFESSIONAL ENGINEER
LESLIE E. ROBERTS
No. 34360
UNIVERSITY OF THE STATE OF N.Y.

6-AB1-9.10

WORTHINGTON, SKILLING, HELLE & JACKSON — Civil & Structural Engineers

PROJECT: THE WORLD TRADE CENTER | TITLE: CONNECTION DETAIL 806 A & B | DATE: 5-1-67

REVISIONS

7-28-67
9-15-67
11-14-67

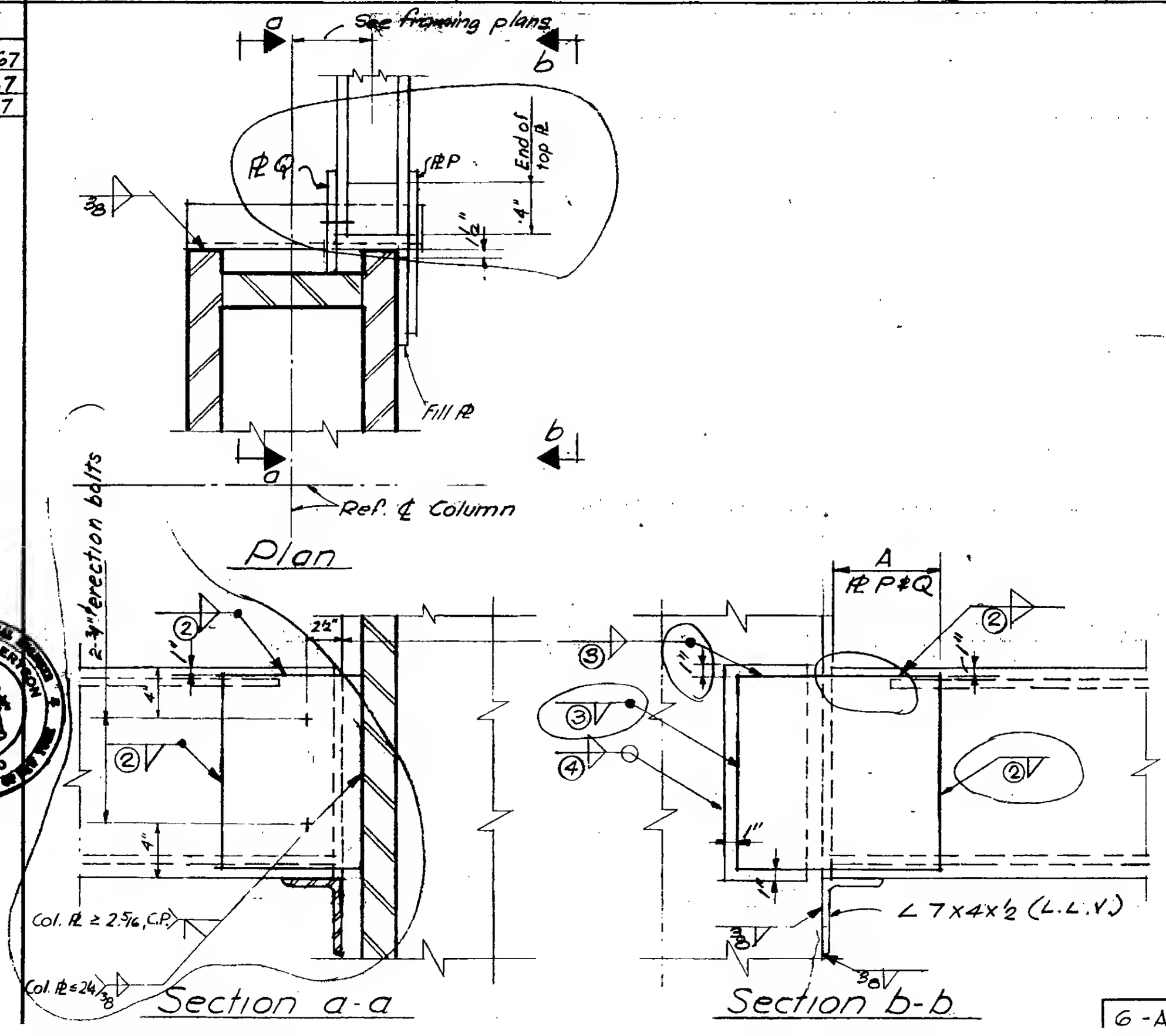

LICENSED PROFESSIONAL ENGINEER LESLIE E. ROBERTSON No. 34300 UNIVERSITY OF THE STATE OF NEW YORK

6-AB1-11

SKILLING - HELLE - CHRISTIANSEN - ROBERTSON Structural & Civil Engineers

PROJECT: THE WORLD TRADE CENTER TITLE: SCHEDULE FOR DETAIL 206 A & B DATE: 7-28-67

REVISIONS

	206 A	206 B				
PLATES						
P	14" x ¾" x 1'-7"	14" x 1" x 2'-0				
Q	14" x ¾"	14" x 1"				
DIMENSIONS						
A	0'-8"	0'-10"				
WELDS						
②	½	¾				
③	½	¾				
④	½	½				

6-AB1-11.1

WORTHINGTON, SKILLING, HELLE & JACKSON — Civil & Structural Engineers

PROJECT: THE WORLD TRADE CENTER | TITLE: CONNECTION DETAIL 207A | DATE: 5-22-67

REVISIONS
10-2-67
1-24-68

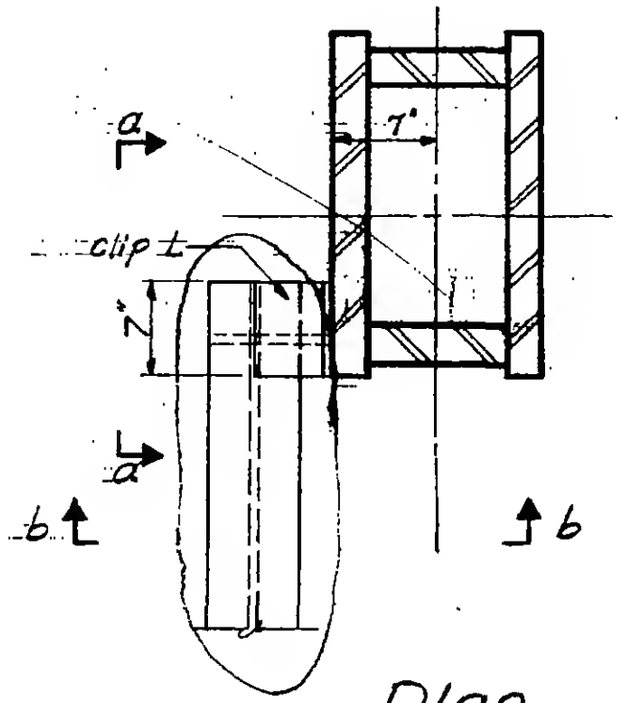

Plan

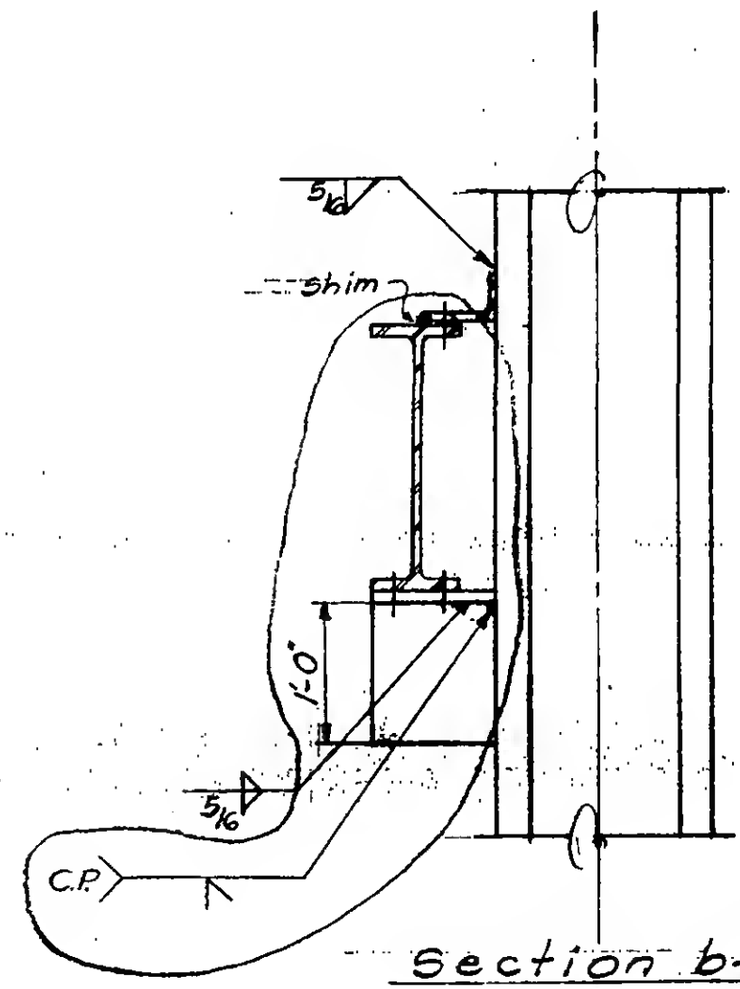

Section b-b

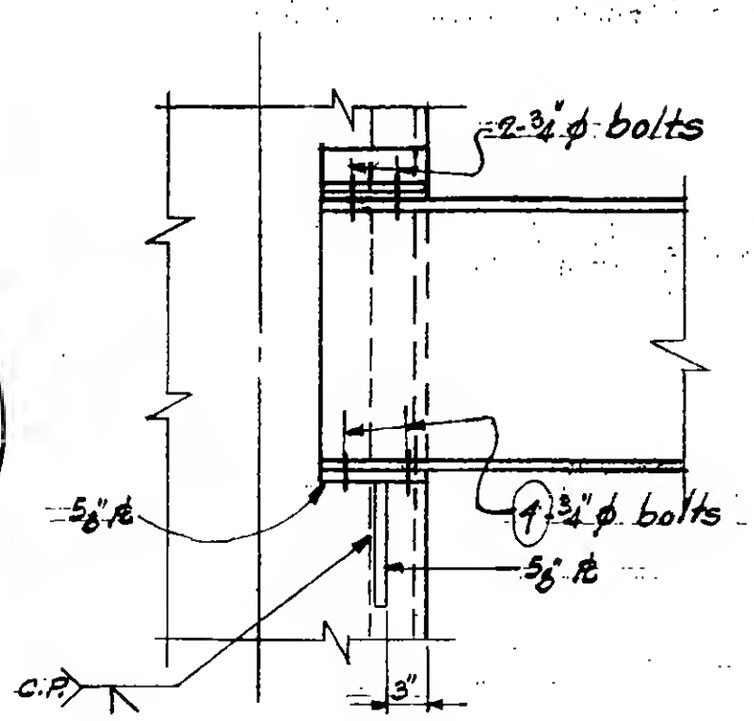

Section a-a

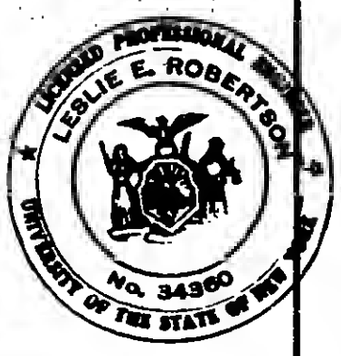

6-AB1-12

SKILLING - HELLE - CHRISTIANSEN - ROBERTSON Structural & Civil Engineers

PROJECT: THE WORLD TRADE CENTER | TITLE: SCHEDULE FOR DETAIL 208 A - F | DATE: 6 - 30 - 67

REVISIONS
7 - 28 - 67
8 - 5 - 67
9 - 15 - 67

REF. DWGS.	6 - AB1 - 13	6 - AB1 - 13.2	6 - AB1 - 13.3	6 - AB1 - 13.2	6 - AB1 - 13.2	6 - AB1 - 13.2
	208A	208B	208C	208 D	208 E	208 F
PLATES						
P	7" x 1/4"	6" x 1/2"	6" x 9/16"	6" x 3/4"	6" x 5/8"	6" x 1/2"
Q	17" x 1/4" x 3'-4"	1/2"	9/16"	3/4"	3/4"	1/2"
R	17" x 1/4" x 3'-4"	1/2"	9/16"	3/4"	3/4"	1/2"
S	—	—	13/16"	—	—	—
ANGLES						
T	3 1/2 x 3 1/2 x 3/8 x 0'-8 1/2"	4 x 3 1/2 x 1/4	4 x 3 1/2 x 1/4	4 x 3 1/2 x 1/4	4 x 3 1/2 x 5/16	4 x 3 1/2 x 5/16
DIMENSIONS						
B	1'-4"	1'-0"	1'-0"	1'-0"	1'-0"	1'-0"
BOLTS						
J	3 - 7/8" ϕ (A 325)	2 - 3/4" ϕ	3 - 3/4" ϕ	3 - 3/4" ϕ	3 - 3/4" ϕ	3 - 3/4" ϕ
K	6 - 3/4" ϕ (A 325)	6 - 3/4" ϕ	8 - 1" ϕ	8 - 1" ϕ	8 - 1" ϕ	6 - 3/4" ϕ
L	10 - 1 1/8" ϕ (A325)	6 - 3/4" ϕ	8 - 1" ϕ	8 - 1" ϕ	8 - 1" ϕ	6 - 3/4" ϕ
M	4 - 1 1/8" ϕ (A325)	2 - 3/4" ϕ	2 - 1" ϕ	2 - 1" ϕ	2 - 1" ϕ	2 - 3/4" ϕ
N	4 - 1 1/8" ϕ (A325)	4 - 3/4" ϕ	6 - 1" ϕ	6 - 1" ϕ	4 - 1" ϕ	4 - 3/4" ϕ
WELDS						
1	5/8	3/8	3/8	3/8	3/8	—
2	5/8	5/16	5/16	3/8	3/8	5/16
3	—	—	3/8	—	—	—
4	—	—	3/4	—	—	—
5	—	—	3/4	—	—	—
6	—	—	—	—	—	C. P.

6 - AB1 - 13.1

WORTHINGTON, SKILLING, HELLE & JACKSON, Civil & Structural Engineers

PROJECT: THE WORLD TRADE CENTER | TITLE: CONNECTION DETAIL 208 A | DATE: 5-9-67

REVISIONS
6-30-67
7-28-67
9-15-67

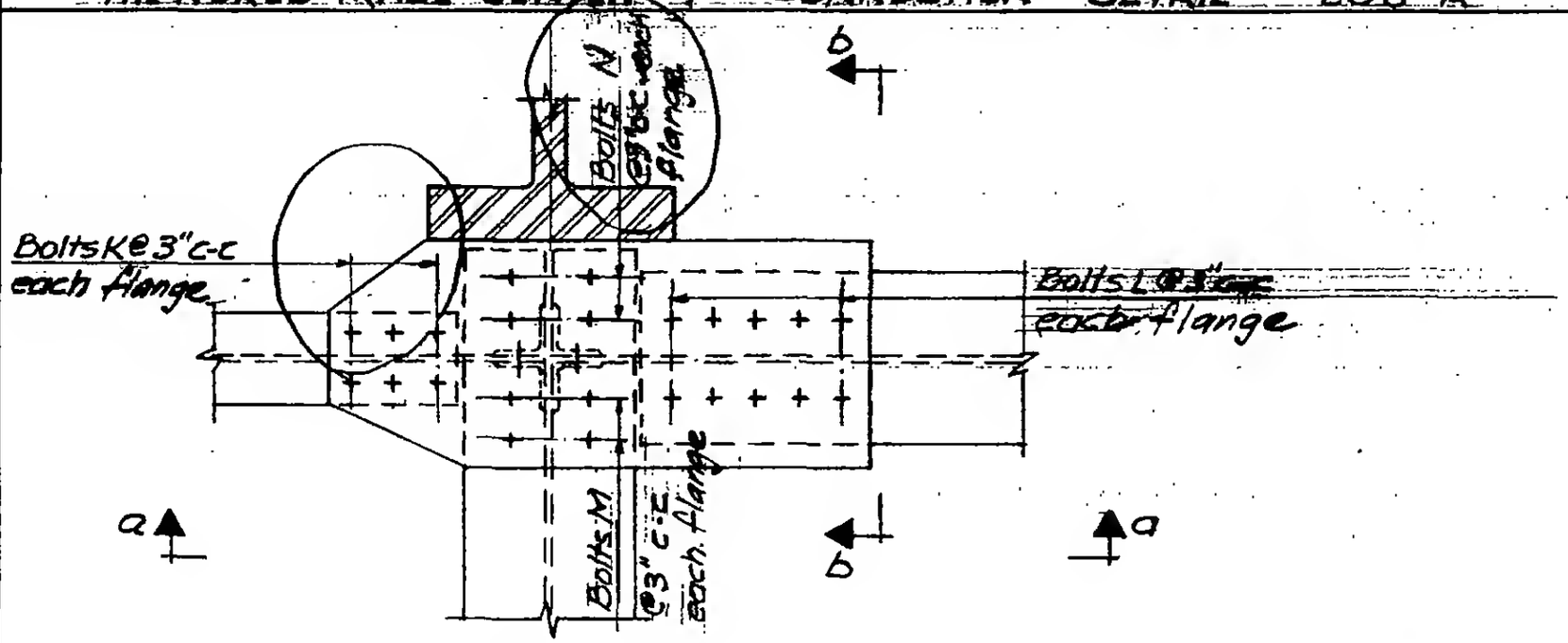

Plan

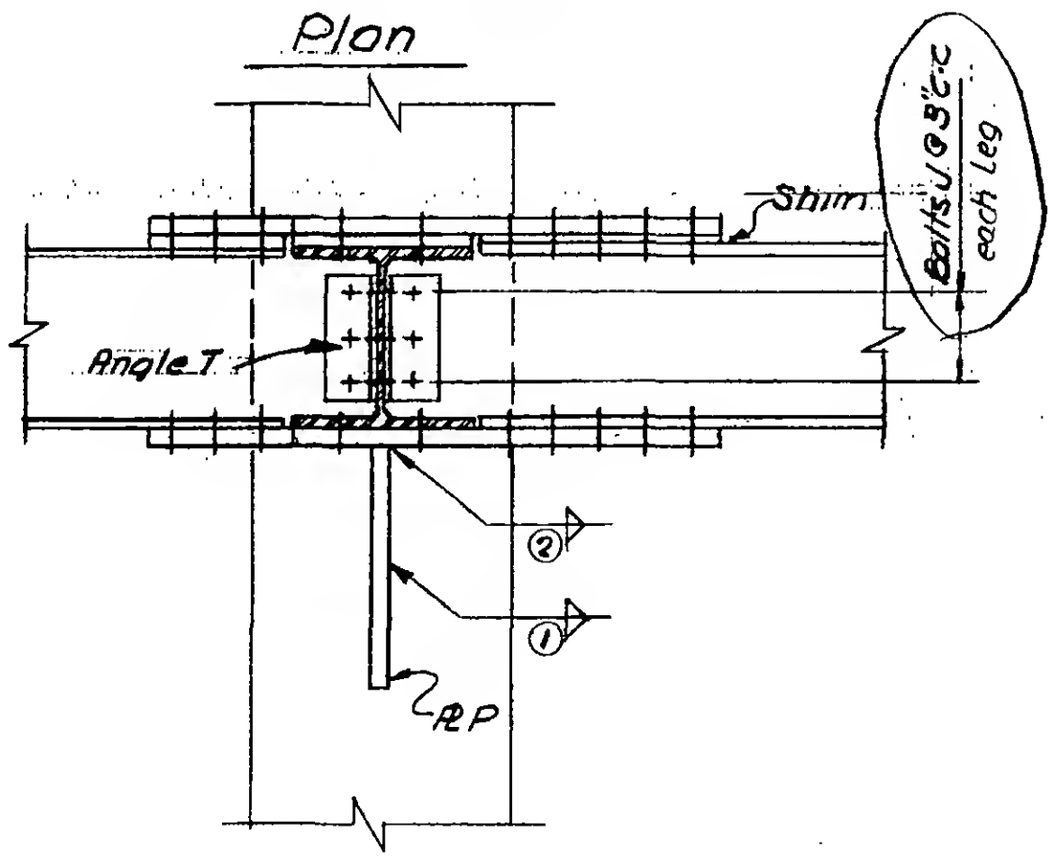

Section a-a

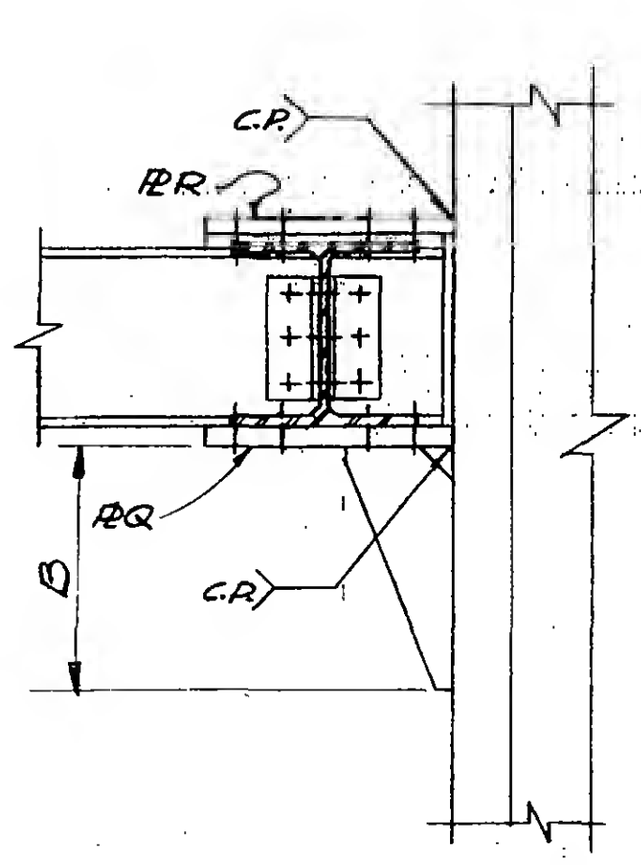

Section b-b

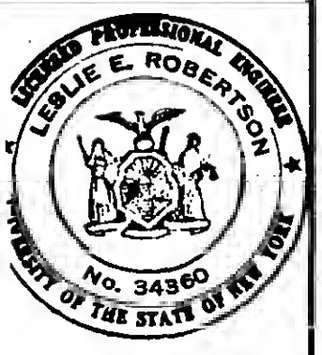

6-AB1-13

WORTHINGTON, SKILLING, HELLE & JACKSON — Civil & Structural Engineers

PROJECT: THE WORLD TRADE CENTER | TITLE: CONNECTION DETAIL 208 B, D, E, F, G & H | DATE: 7-26-67

REVISIONS: 9-15-67

6-AB1-13.1 for Sched 208 D-F
6-AB1-13.4 for Sched. 208 G&H

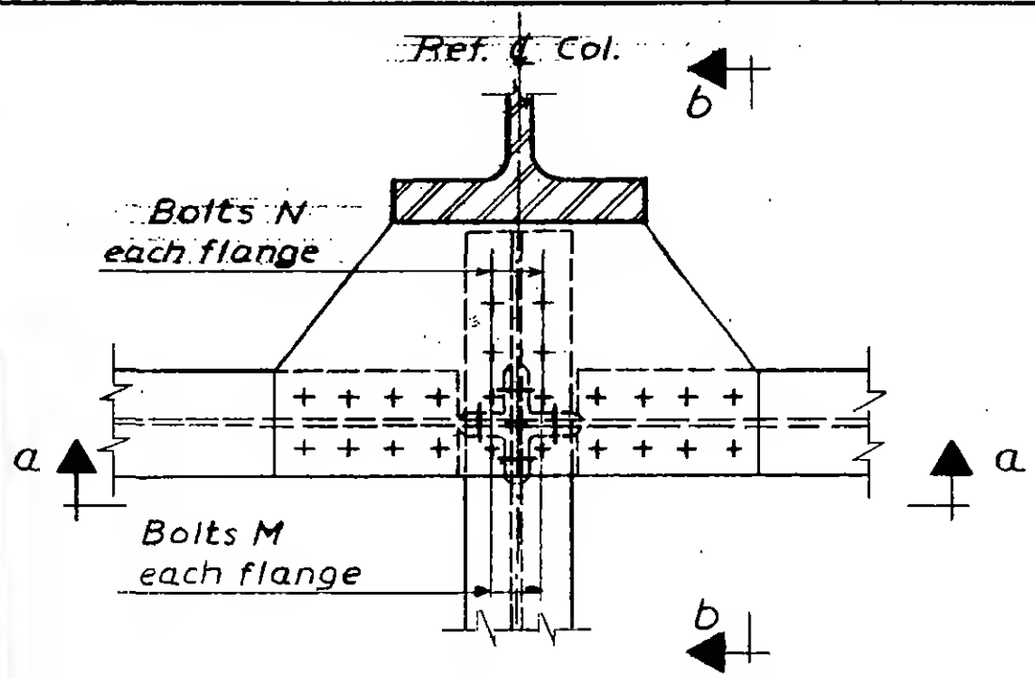

Plan

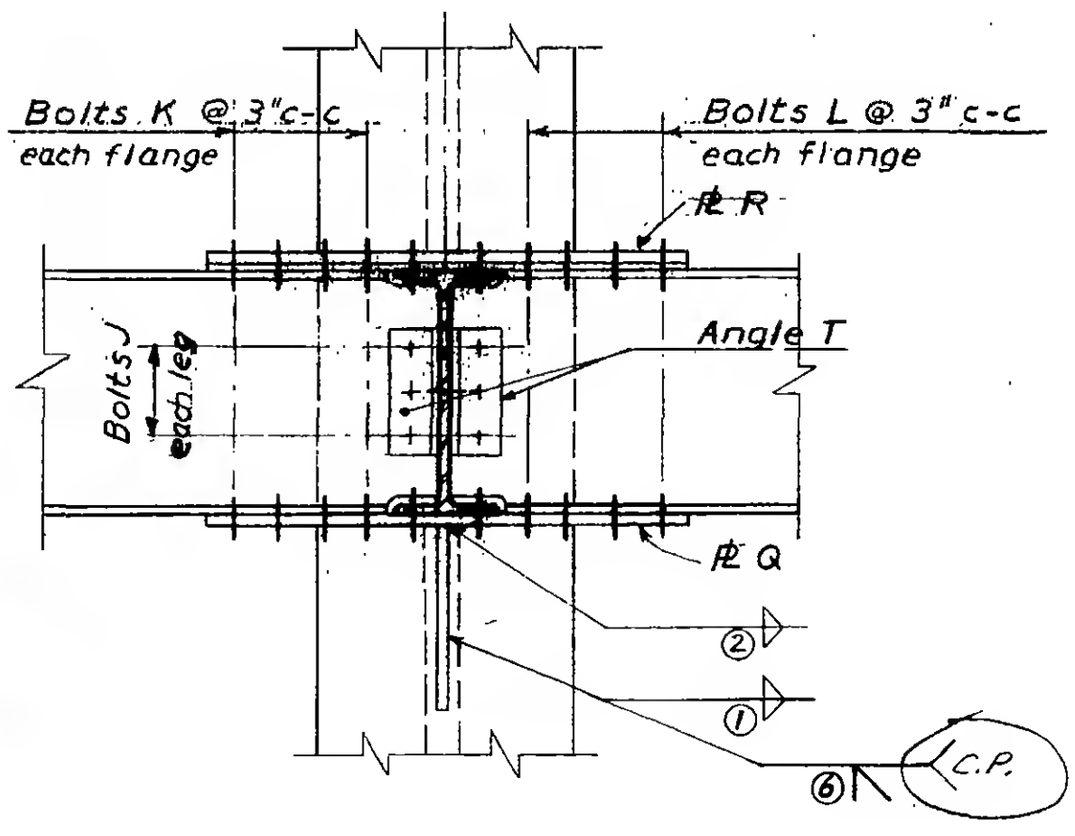

Section a-a

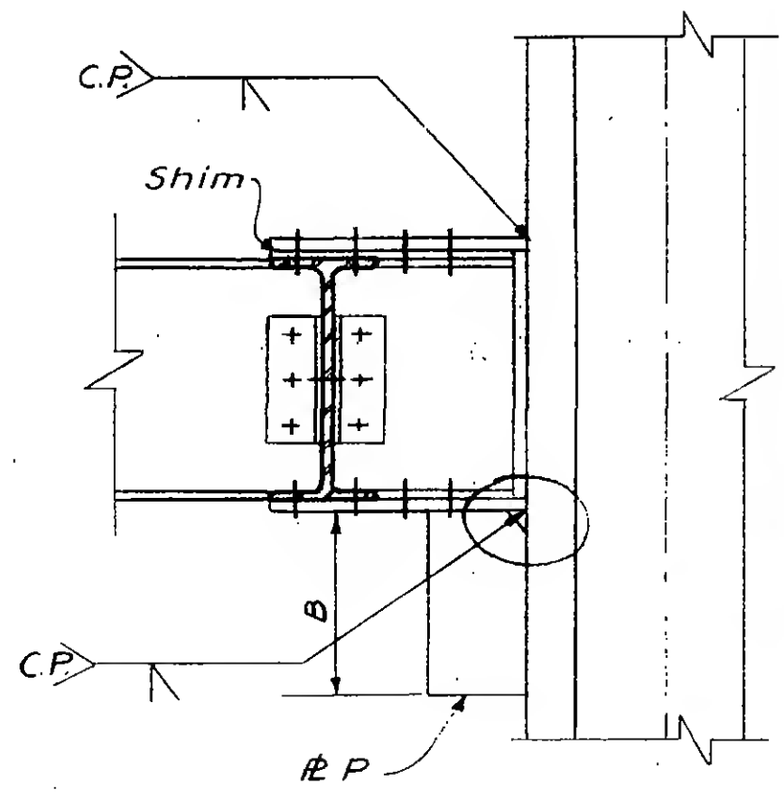

Section b-b

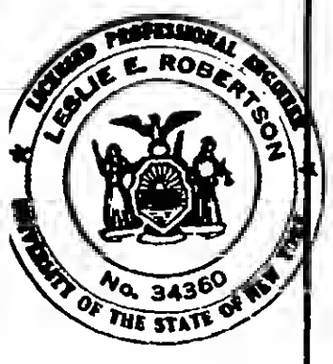

6-AB1-13.2

WORTHINGTON, SKILLING, HELLE & JACKSON — Civil & Structural Engineers

PROJECT	TITLE	DATE
THE WORLD TRADE CENTER	CONNECTION DETAIL 20B C	5-9-67

REVISIONS

7-28-67
9-15-67

Note: See plan for location of all beam ℄'s relative to column ℄.

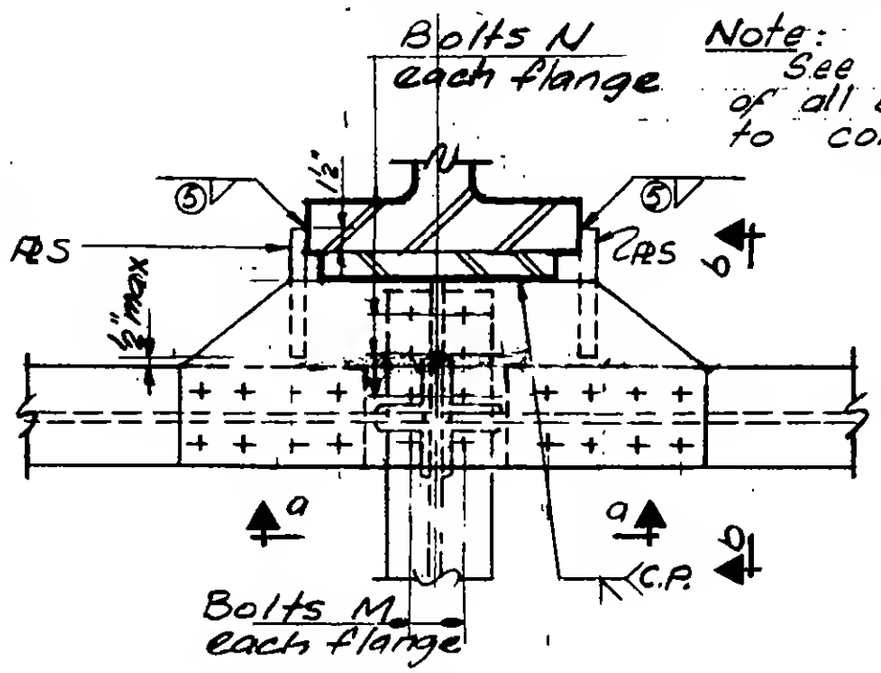

Plan

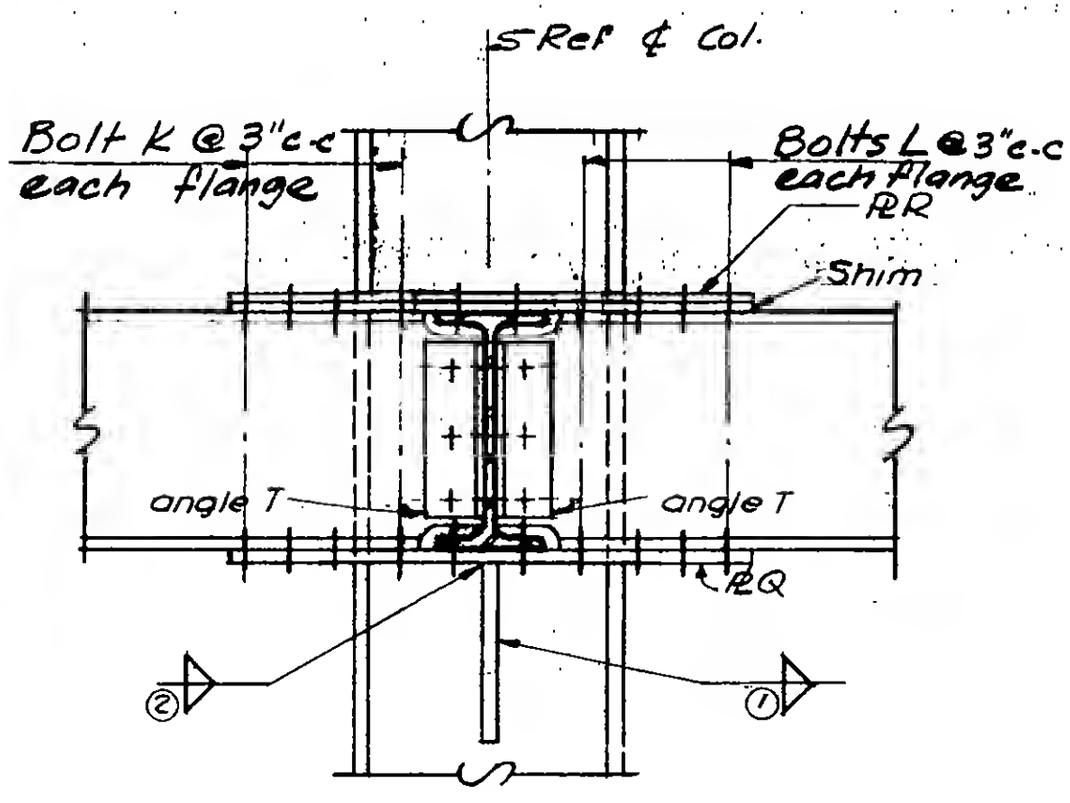

Section a-a

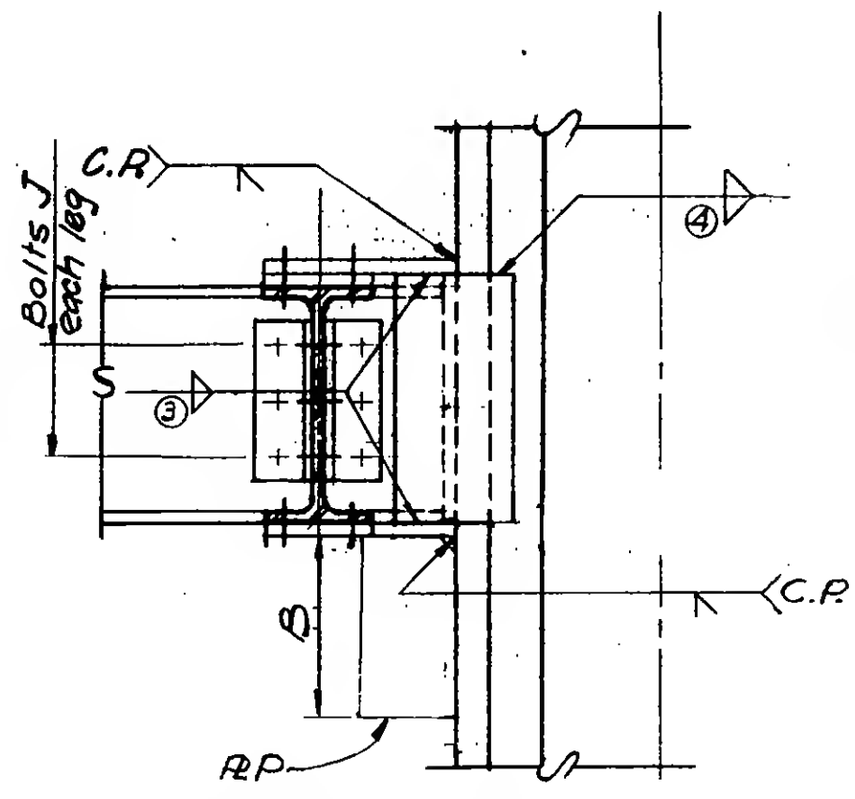

Section b-b

6-AB1-13.3

LICENSED PROFESSIONAL ENGINEER
LESLIE E. ROBERTSON
No. 34360
UNIVERSITY OF THE STATE OF NEW YORK

SKILLING - HELLE - CHRISTIANSEN - ROBERTSON Structural & Civil Engineers

PROJECT: THE WORLD TRADE CENTER | TITLE: SCHEDULE FOR DETAIL 208 G & H, I | DATE: 8-5-67

REVISIONS
9-15-67
10-5-67

Ref. Dwgs.	6-AB1-13.2	6-AB1-13.2	6-AB1-13.5			
	208G	208H	208I			
PLATES						
P	6"x1/2"	6x5/8"	7x5/8"			
Q	1/2"	5/8"	5/8"			
R	1/2"	5/8"	3/4"			
S	—	—	—			
ANGLES						
T	4x3 1/2x5/16	4x3 1/2x5/16	—			
BOLTS						
J	3-3/4"ϕ	4-3/4"ϕ	—			
K	6-3/4"ϕ	6-3/4"ϕ	8-1 1/8 ϕ			
L	6-3/4"ϕ	6-3/4"ϕ	—			
M	2-3/4"ϕ	2-3/4"ϕ	4-3/4"ϕ			
N	4-3/4"ϕ	4-3/4"ϕ	4-3/4"ϕ			
DIMENSION						
B	1'-0"	1'-0"	1'-0"			
WELDS						
①	—	—	5/16			
②	5/16	5/16	—			
③	—	—	—			
④	—	—	—			
⑤	—	—	—			
⑥	C.P.	C.P.	—			

6-AB1-13.4

SKILLING - HELLE - CHRISTIANSEN - ROBERTSON Structural & Civil Engineers

PROJECT THE WORLD TRADE CENTER | TITLE CONNECTION DETAIL 208 I | DATE 10-5-67

REVISIONS

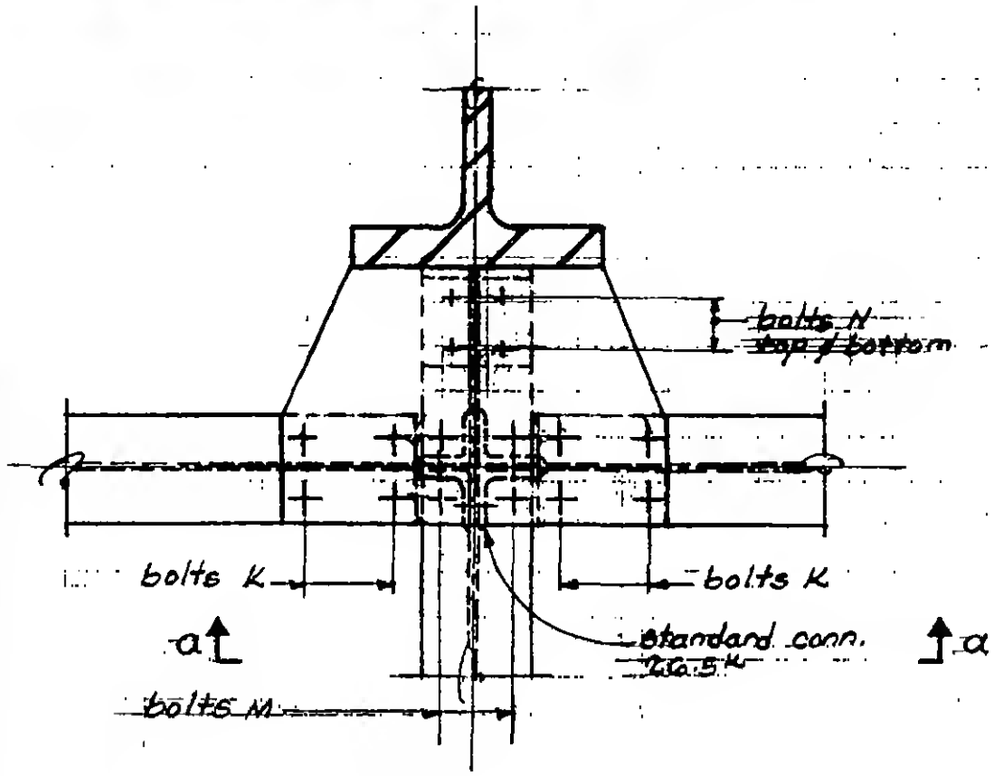

PLAN

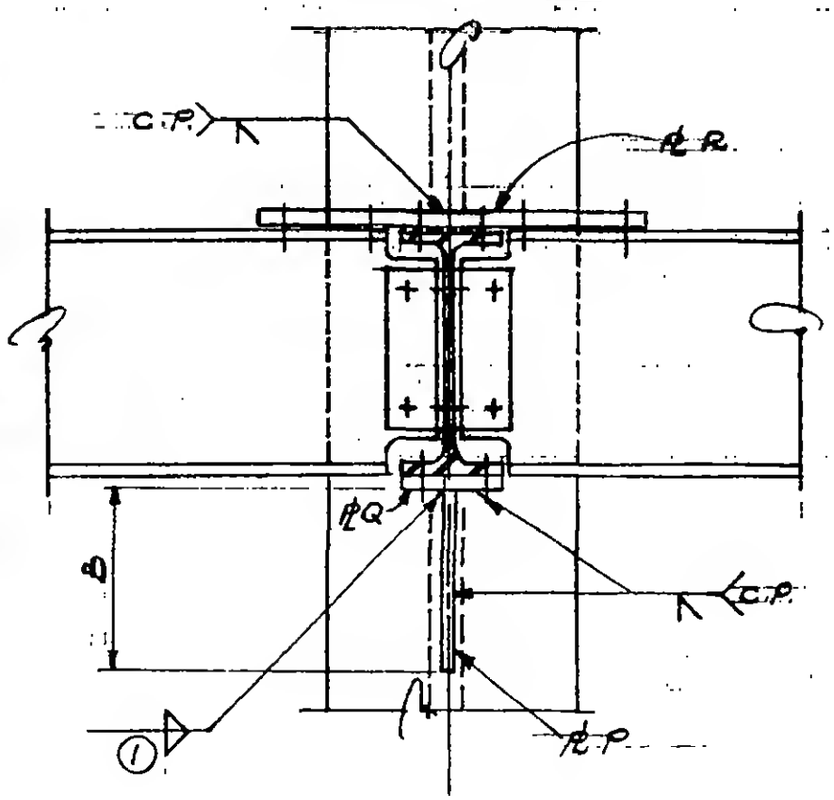

Section a-a

LESLIE E. ROBERTSON
No. 34360
UNIVERSITY OF THE STATE OF NEW YORK

G-AB1-13.5

SKILLING - HELLE - CHRISTIANSEN - ROBERTSON — Structural & Civil Engineers

PROJECT: THE WORLD TRADE CENTER | TITLE: CONNECTION DETAIL 209(A) | DATE: 5-22-67

REVISIONS

10-2-67

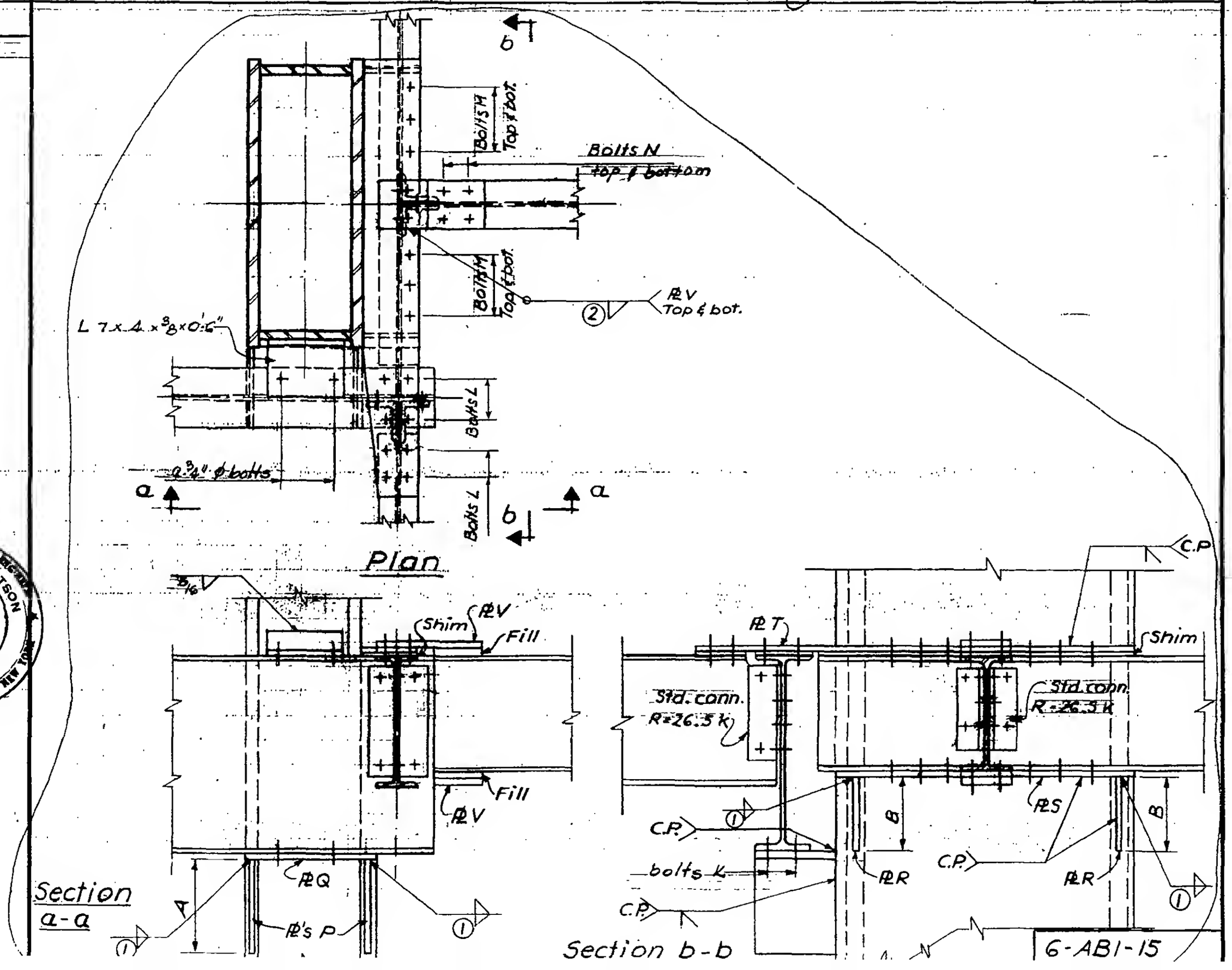

LICENSED PROFESSIONAL ENGINEER
LESLIE E. ROBERTSON
No. 34360
UNIVERSITY OF THE STATE OF NEW YORK

SKILLING - HELLE - CHRISTIANSEN - ROBERTSON Structural & Civil Engineers

PROJECT: THE WORLD TRADE CENTER | TITLE: SCHEDULE FOR DETAIL 209 A | DATE: 10-2-67

REVISIONS

	209 A
PLATES	
P	3/4
Q	3/4
R	5/8
S	5/8
T	5/8
V	1/2
DIMENSIONS	
A	1'-0"
B	0'-10"
BOLTS	
K	4 - 3/4" ϕ
L	4 - 3/4" ϕ
M	3 - 3/4" ϕ
N	4 - 3/4" ϕ
WELDS	
1	5/16
2	1/4

LICENSED PROFESSIONAL ENGINEER LESLIE E. ROBERTSON No. 34360 UNIVERSITY OF THE STATE OF NEW YORK

6-AB1-15.1

SKILLING - HELLE - CHRISTIANSEN - ROBERTSON Structural & Civil Engineers

PROJECT: THE WORLD TRADE CENTER | TITLE: CONNECTION DETAIL 309B | DATE: 4-17-68

REVISIONS

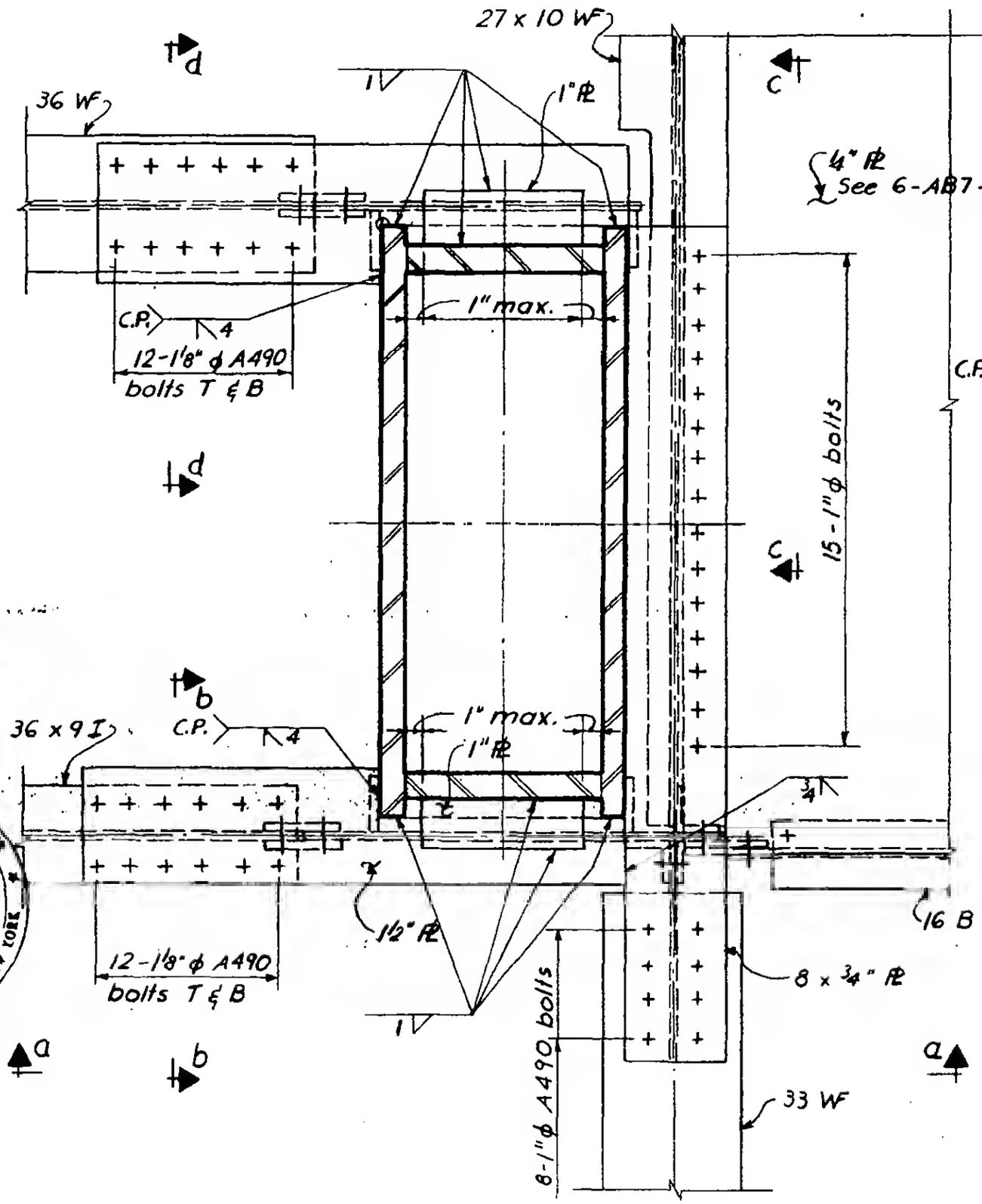

Plan

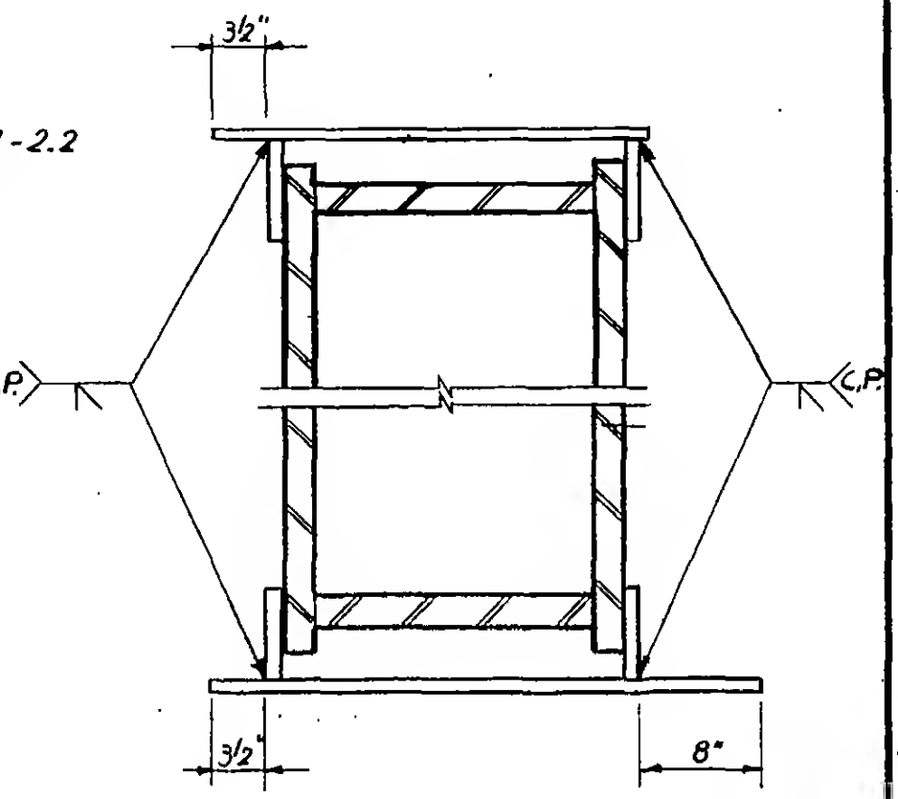

Detail 1

See 6-AB1-15.3 for sections

LICENSED PROFESSIONAL ENGINEER
LESLIE E. ROBERTSON
No. 34360
UNIVERSITY OF THE STATE OF NEW YORK

6-AB1-15.2

SKILLING - HELLE - CHRISTIANSEN - ROBERTSON Structural & Civil Engineers

PROJECT: THE WORLD TRADE CENTER | TITLE: CONNECTION DETAIL 209B | DATE: 4-17-68

REVISIONS

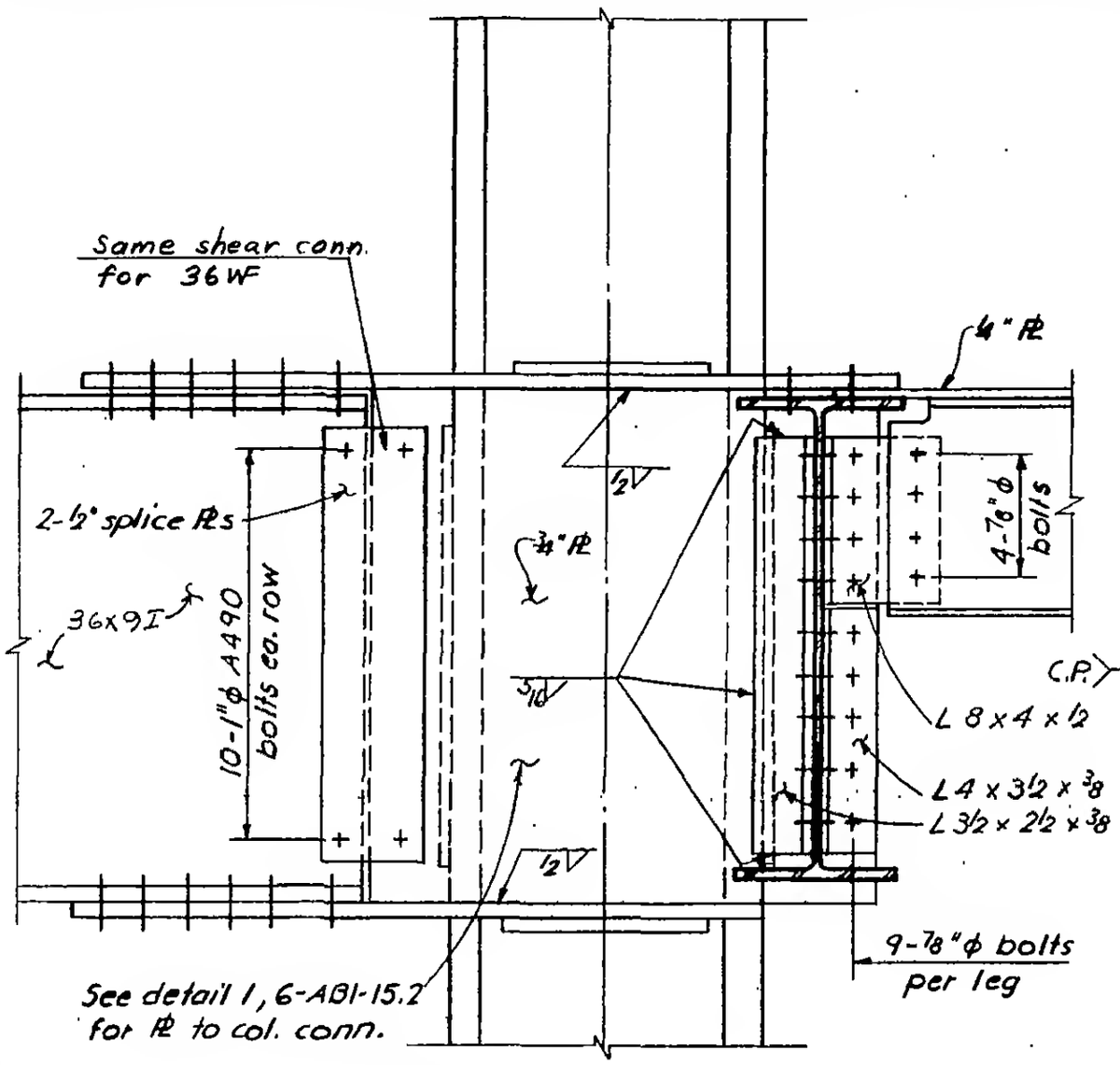

Section a-a

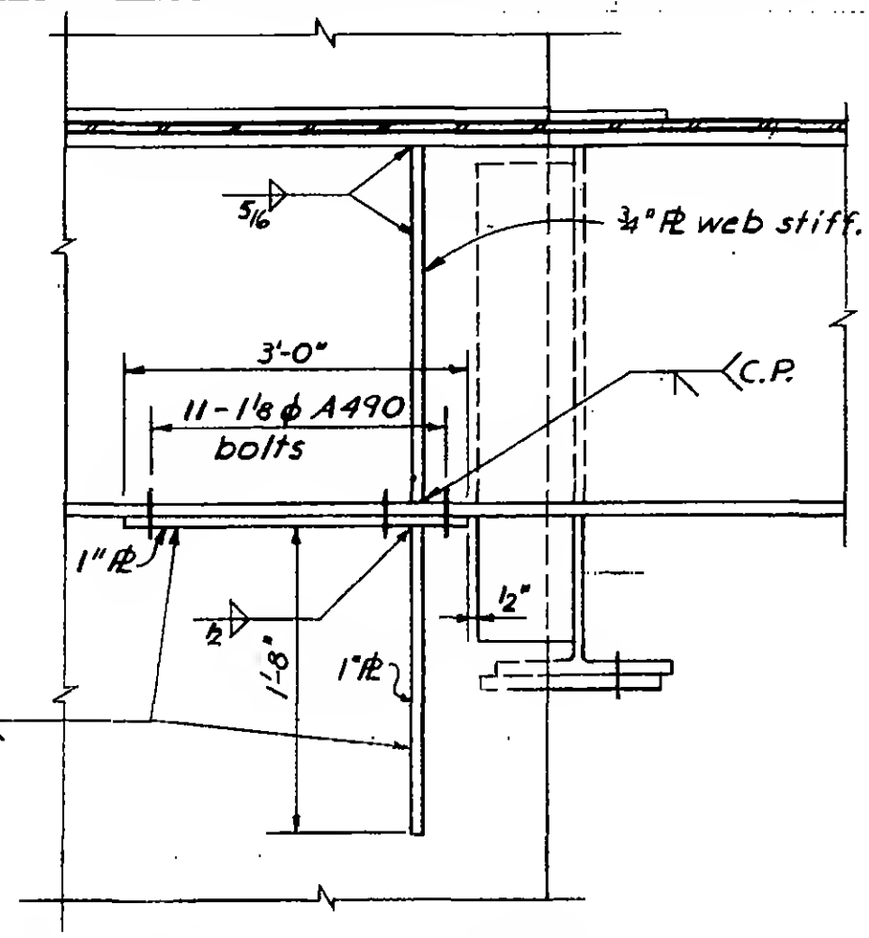

Section c-c

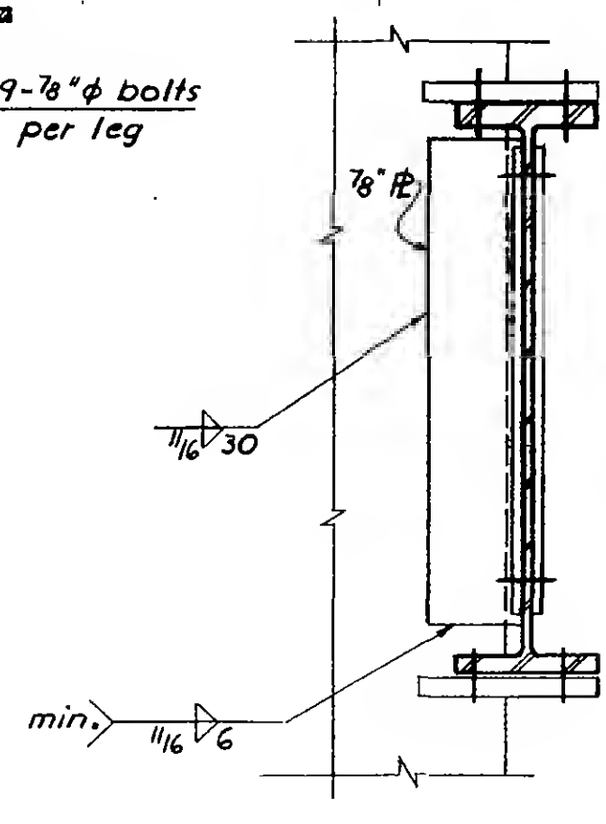

Section b-b
Section d-d (sim.)

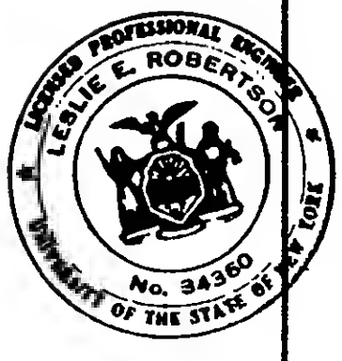

6-AB1-15.3

WORTHINGTON, SKILLING, HELLE & JACKSON — Civil & Structural Engineers

PROJECT	TITLE	DATE
THE WORLD TRADE CENTER	CONNECTION DETAIL 210 A	6-30-67

REVISIONS

10-5-67

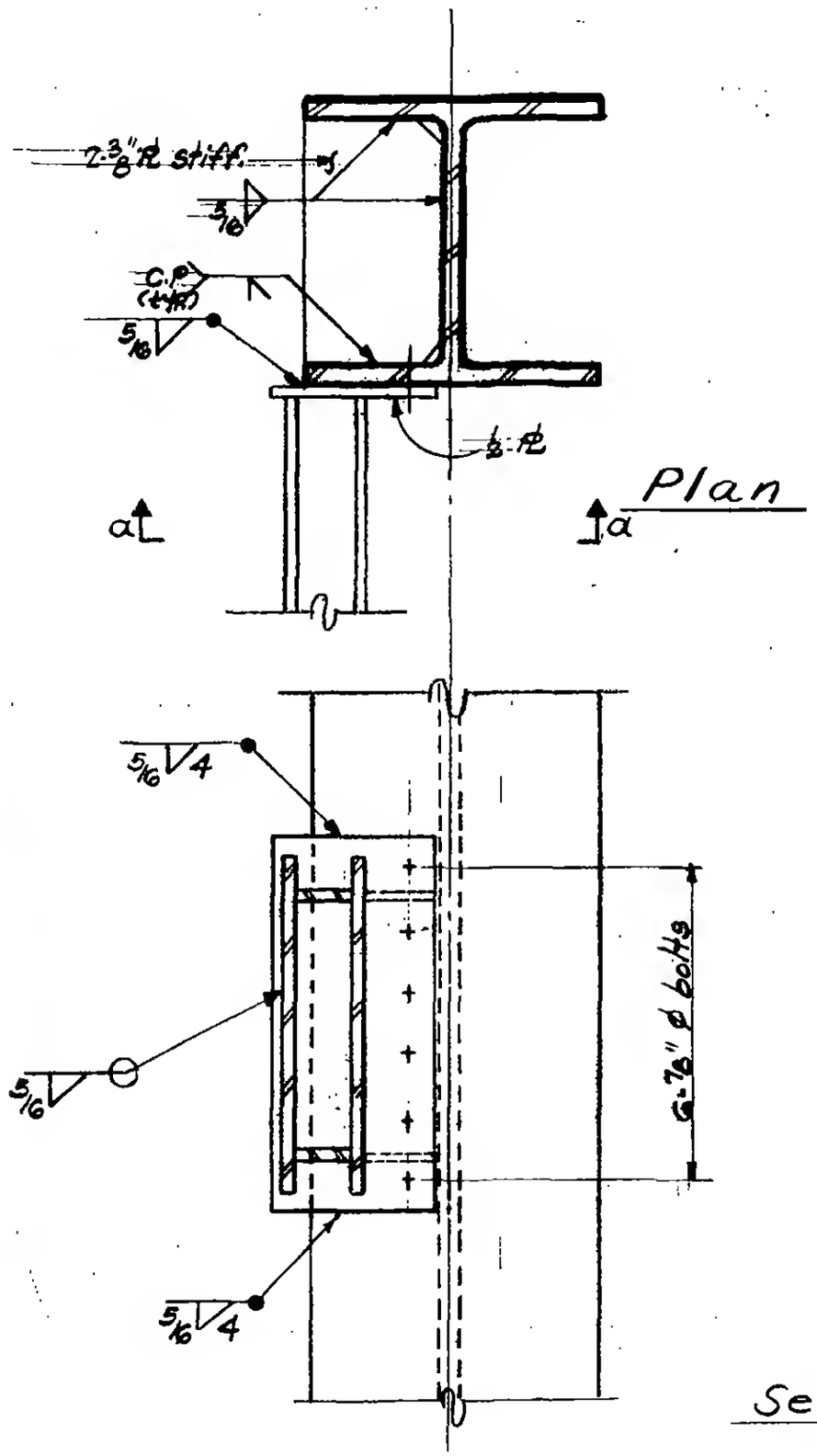

Plan

Section a-a

LICENSED PROFESSIONAL ENGINEER
LESLIE E. ROBERTSON
No. 34360
UNIVERSITY OF THE STATE OF NEW YORK

6-AB1-16

WORTHINGTON, SKILLING, HELLE & JACKSON — Civil & Structural Engineers

PROJECT: THE WORLD TRADE CENTER | TITLE: CONNECTION DETAIL 211A | DATE: 5-22-67

REVISIONS

9-15-67

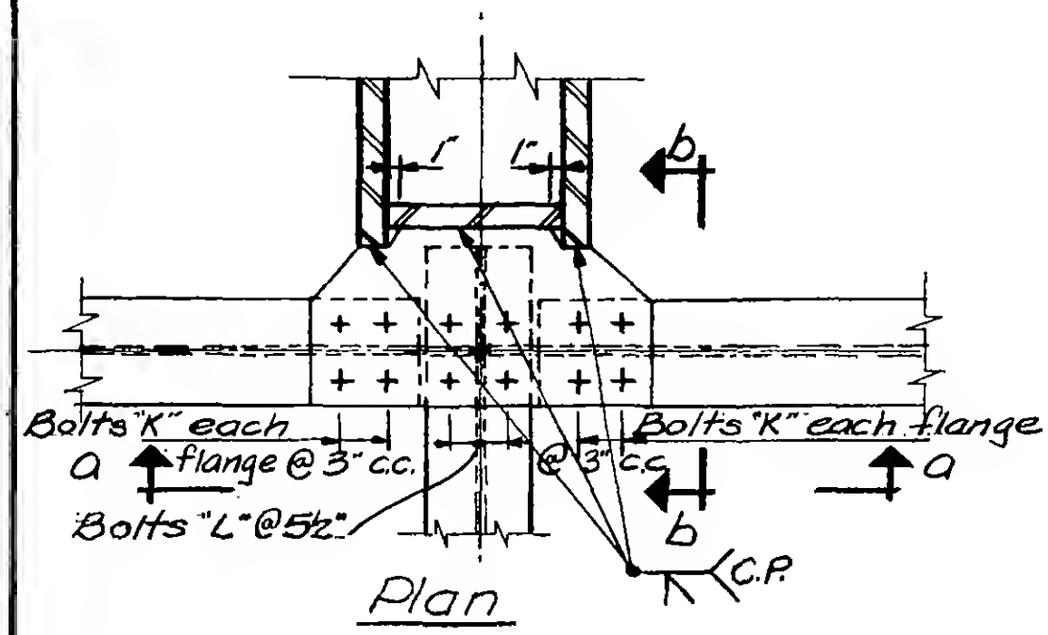

Plan

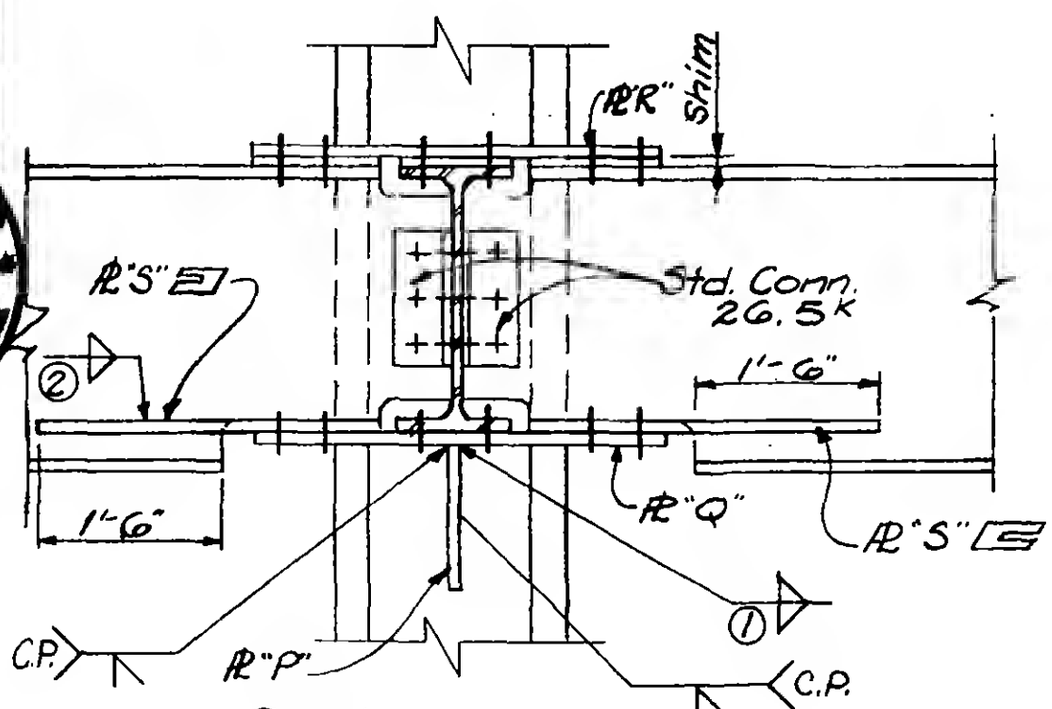

Section a-a

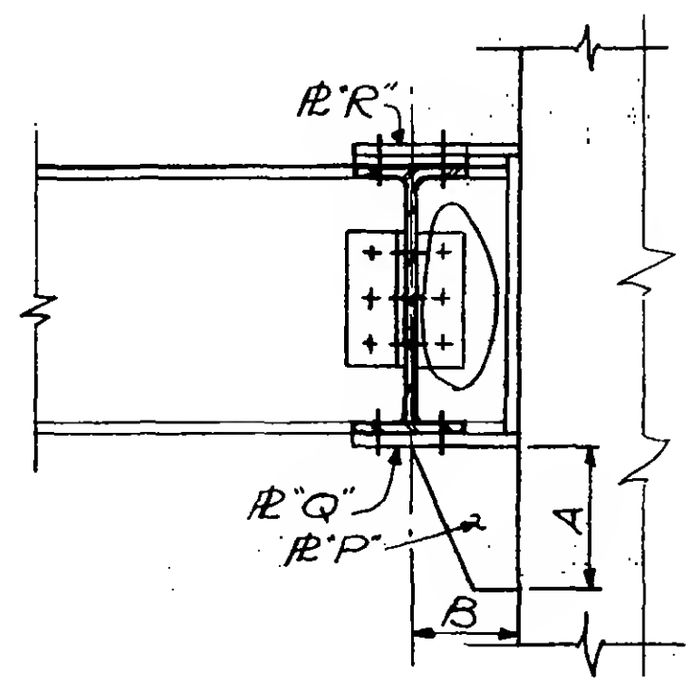

Section b-b

6-ABI-17

SKILLING - HELLE - CHRISTIANSEN - ROBERTSON Structural & Civil Engineers

PROJECT: THE WORLD TRADE CENTER

TITLE: SCHEDULE FOR DETAIL 211 A, B

DATE: 9-15-67

REVISIONS

10-2-67

	211 A	211 B
PLATES		
P	3/4"	1"
Q	3/4"	1"
R	5/8"	1/2"
S	8" × 11/16"	—
DIMENSIONS		
A	1'-3"	1'-4"
B	0'-8 1/2"	0'-9"
BOLTS		
K	4-3/4"φ	—
L	4-3/4"φ	4-3/4"φ
WELDS		
①	5/16"	5/16
②	5/16"	—

6-AB1-17.1

SKILLING - HELLE - CHRISTIANSEN - ROBERTSON Structural & Civil Engineers

PROJECT THE WORLD TRADE CENTER | TITLE CONNECTION DETAIL 2HB | DATE 10-2-67

REVISIONS

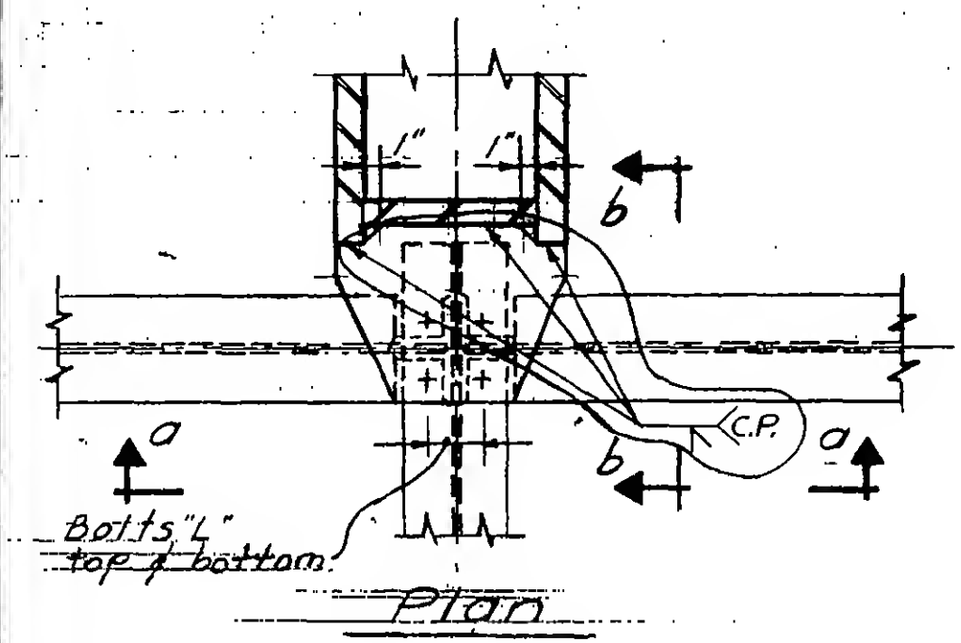

Plan

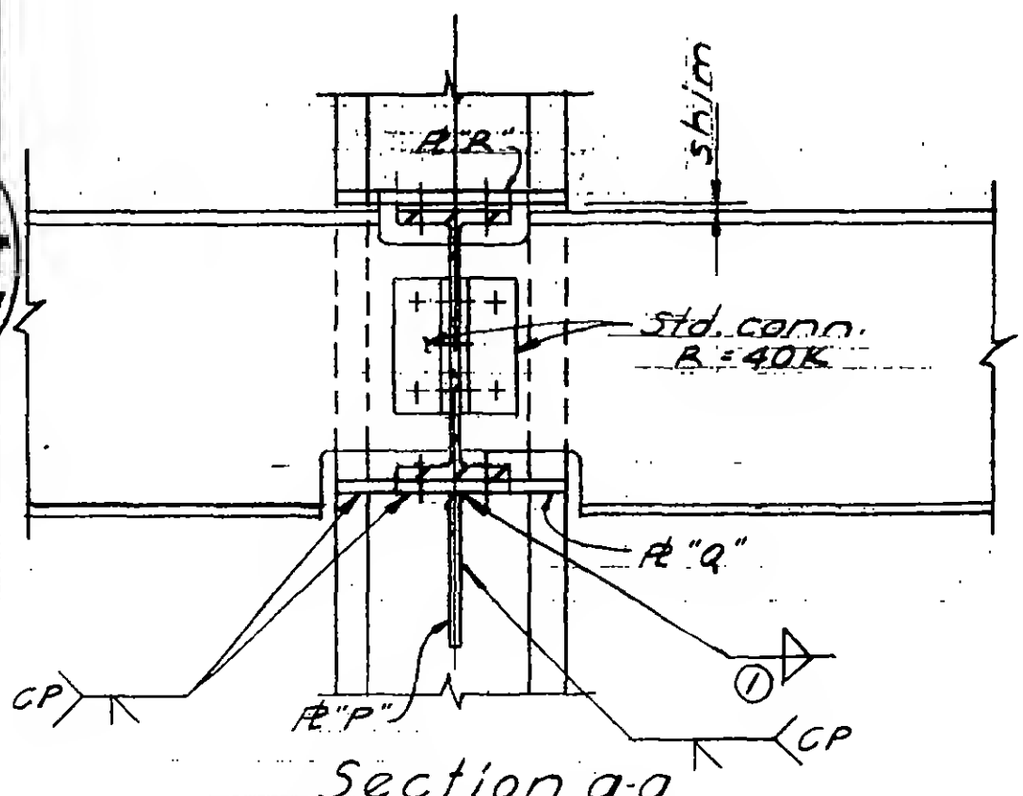

Section a-a

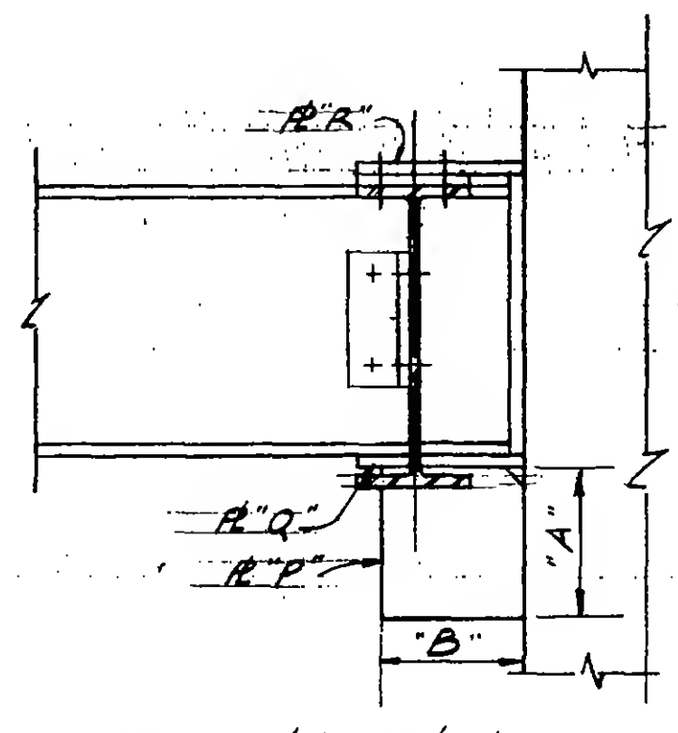

Section b-b

6-AB1-17.2

LICENSED PROFESSIONAL ENGINEER
LESLIE E. ROBERTSON
No. 34360
UNIVERSITY OF THE STATE OF NEW YORK

SKILLING - HELLE - CHRISTIANSEN - ROBERTSON Structural & Civil Engineers

PROJECT: THE WORLD TRADE CENTER | TITLE: CONNECTION DETAIL 212 | DATE: 7-20-67

REVISIONS

12-21-67

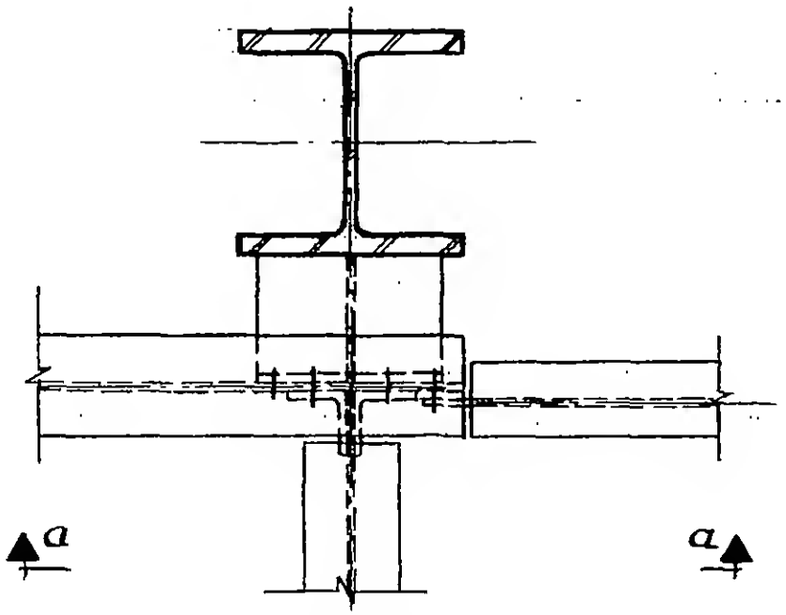

Plan

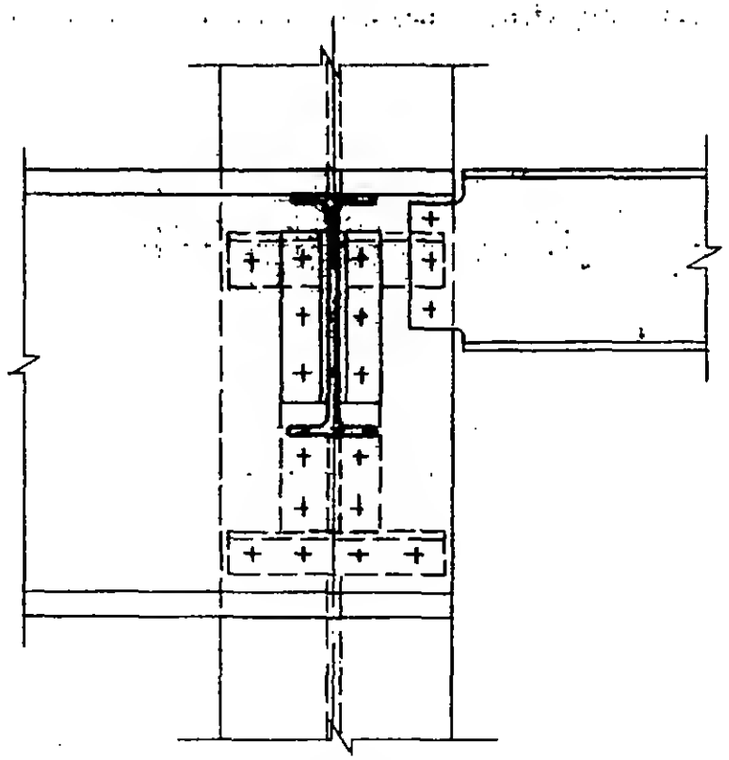

Section a-a

LICENSED PROFESSIONAL ENGINEER
LESLIE E. ROBERTSON
No. 34360
STATE OF NEW YORK

6-AB1-18

WORTHINGTON, SKILLING, HELLE & JACKSON — Civil & Structural Engineers

PROJECT: THE WORLD TRADE CENTER | TITLE: CONNECTION DETAIL 213 A | DATE: 5-9-67

REVISIONS

7-28-67

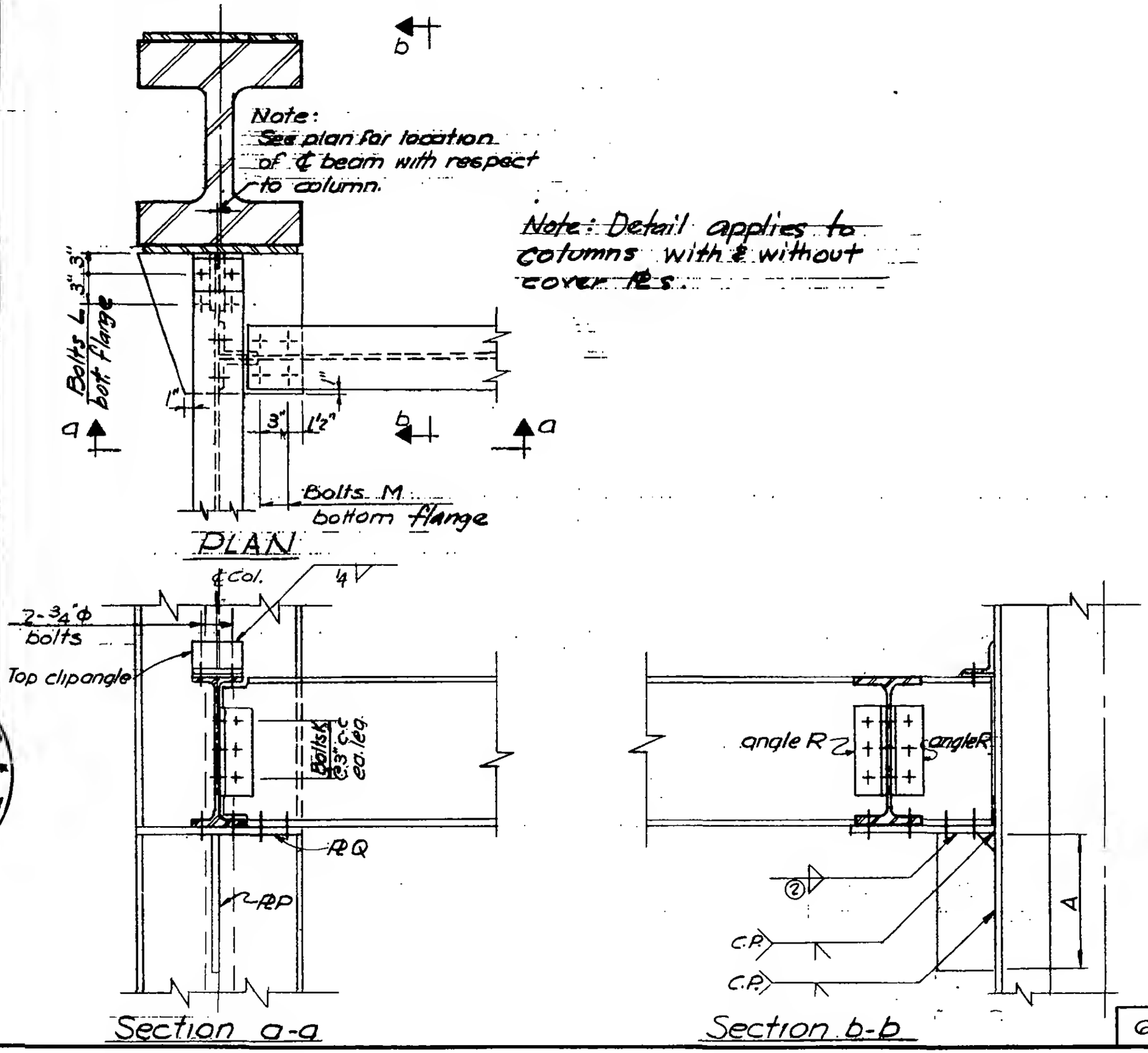

Section a-a

Section b-b

6-AB1-20

LICENSED PROFESSIONAL ENGINEER LESLIE E. ROBERTSON No. 34360 UNIVERSITY OF THE STATE OF NEW YORK

SKILLING - HELLE - CHRISTIANSEN - ROBERTSON Structural & Civil Engineers

PROJECT: THE WORLD TRADE CENTER | TITLE: SCHEDULE FOR DETAIL 213 A | DATE: 7-28-67

REVISIONS

	213 A					
PLATES						
P	7" x 1"					
Q	¾"					
ANGLES						
R	4 x 3½ x 5/16					
DIMENSIONS						
A	1'-3"					
BOLTS						
K	3 - ¾" ϕ					
L	4 - ¾" ϕ					
M	4 - 1" ϕ					
Welds						
②	5/16					

6-AB1-20.1

WORTHINGTON, SKILLING, HELLE & JACKSON — Civil & Structural Engineers

PROJECT: THE WORLD TRADE CENTER | TITLE: CONNECTION DETAIL 213-B | DATE: 7-5-67

REVISIONS

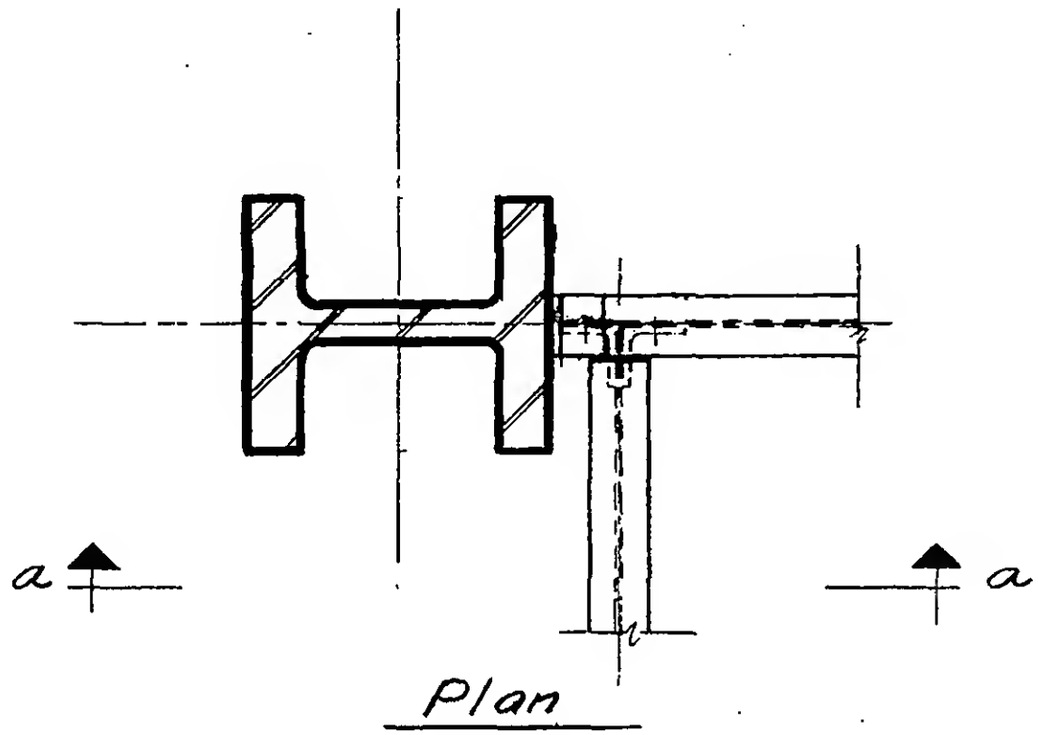

Plan

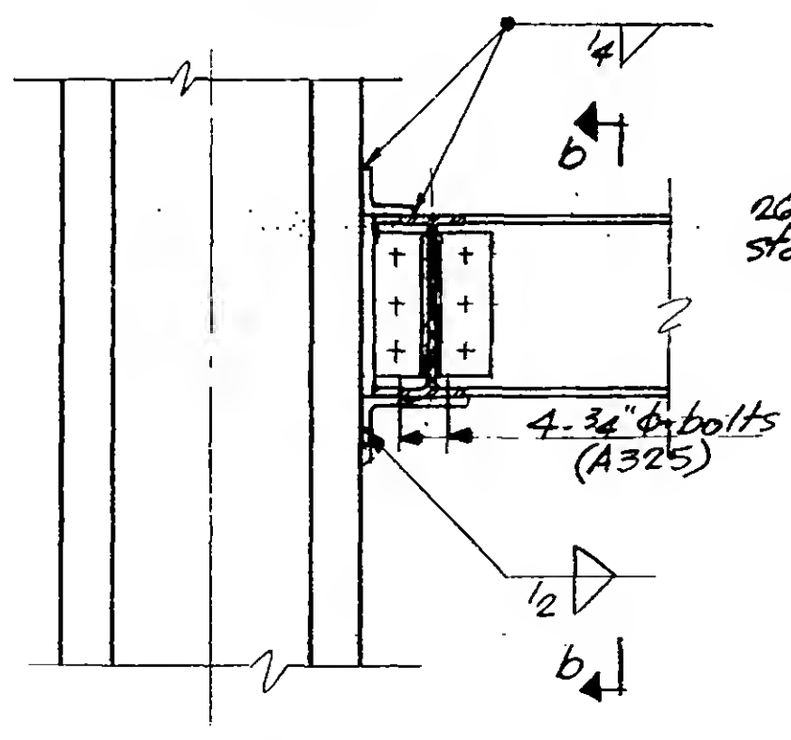

Section a-a

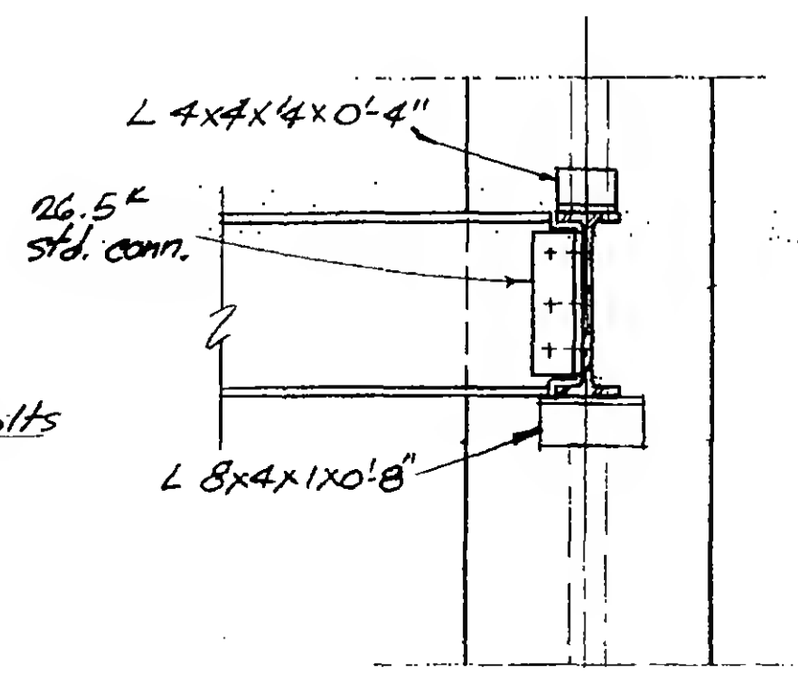

Section b-b

6-AB1-20.2

WORTHINGTON, SKILLING, HELLE & JACKSON — Civil & Structural Engineers

PROJECT: THE WORLD TRADE CENTER | TITLE: CONNECTION DETAIL 214 A | DATE: 5-1-67

REVISIONS
7-28-67
9-15-67

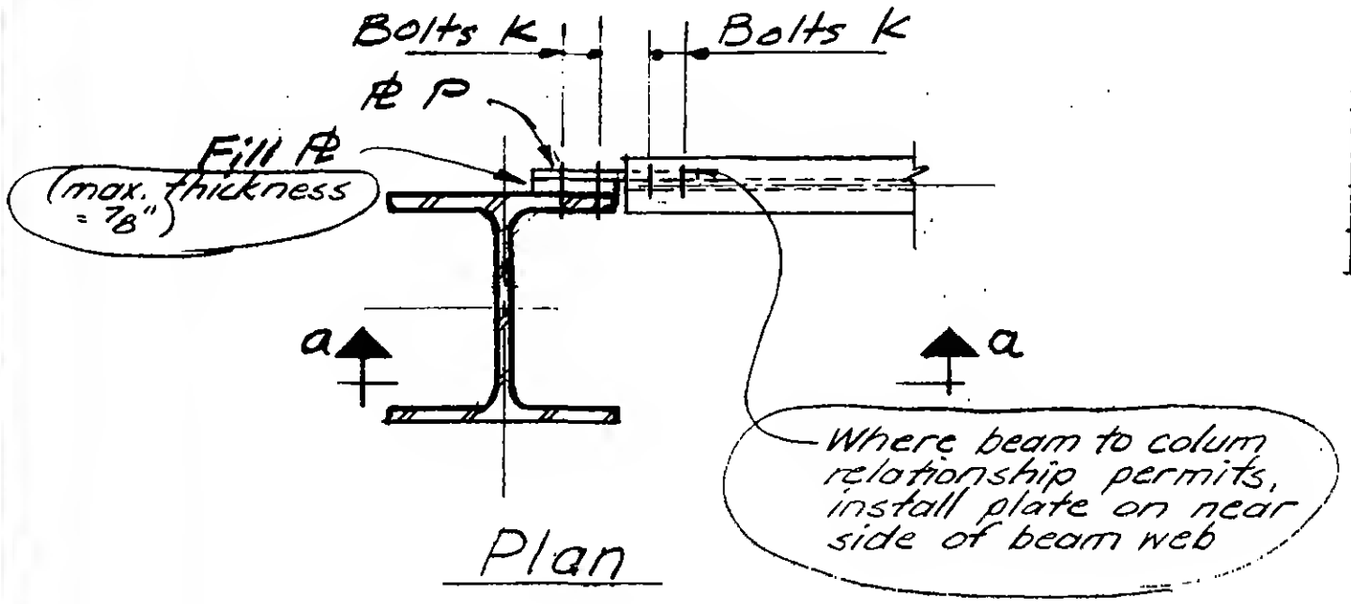

Plan

SCHEDULE		
Detail	Plate P	Bolts K
214 A	1/2"	4-1 1/8"ϕ

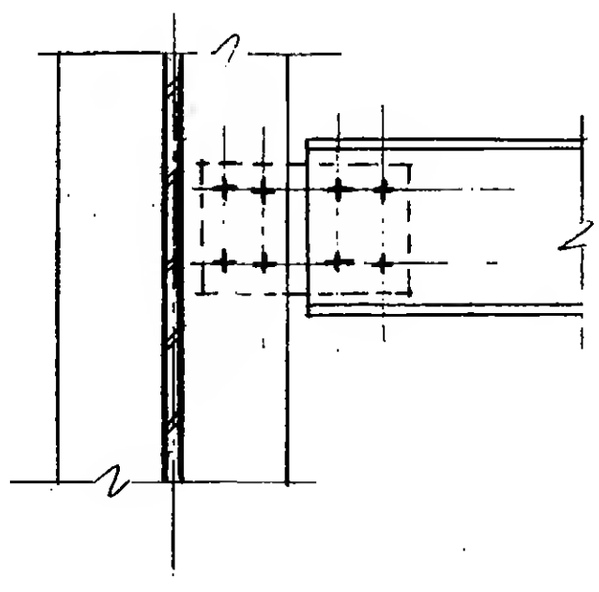

Section a-a

6-AB1-21

SKILLING - HELLE - CHRISTIANSEN - ROBERTSON Structural & Civil Engineers

PROJECT THE WORLD TRADE CENTER | TITLE CONNECTION DETAIL 214B | DATE 8-5-67

REVISIONS

11-16-67

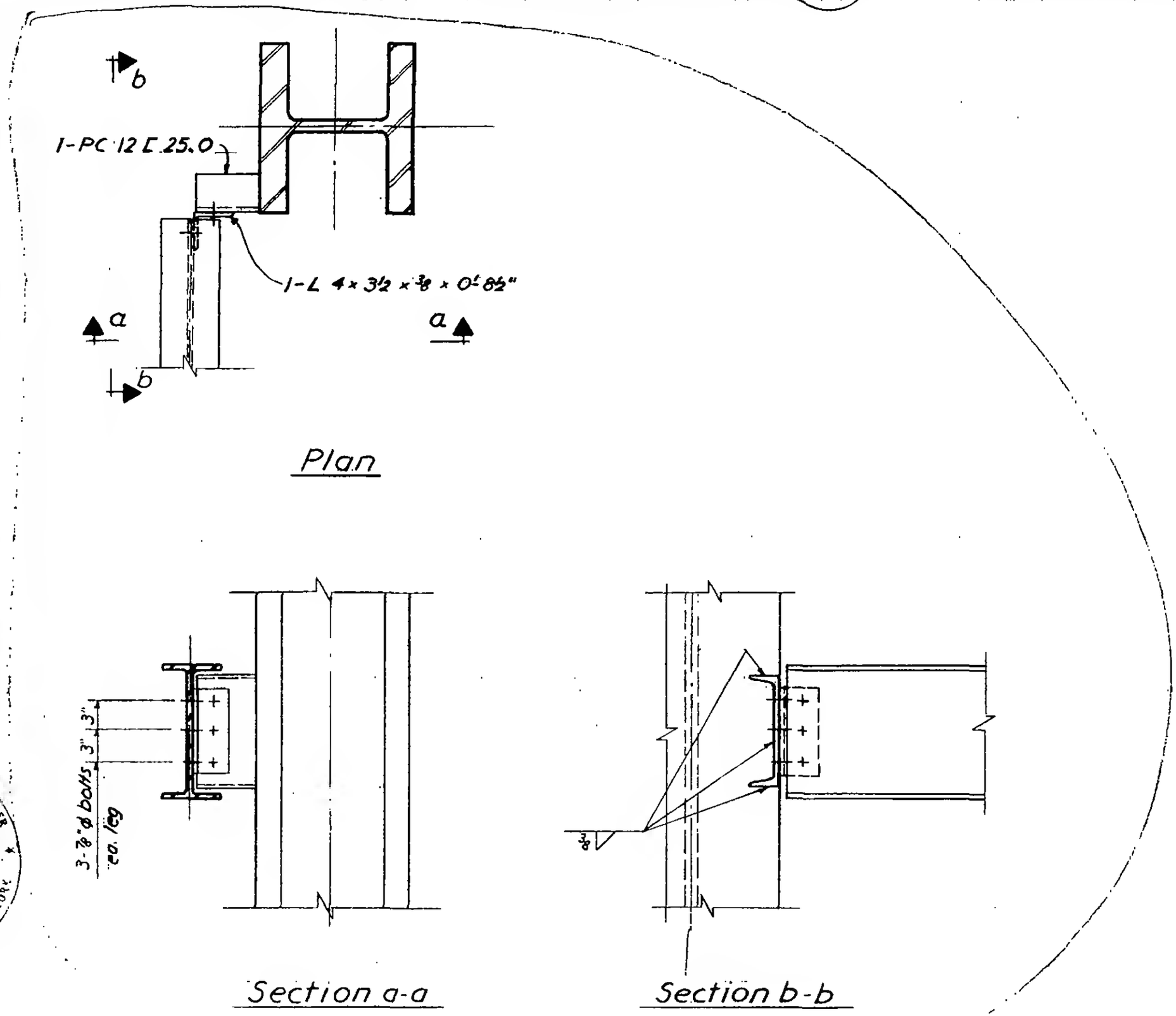

6-AB1-21.1

WORTHINGTON, SKILLING, HELLE & JACKSON — Civil & Structural Engineers

PROJECT: THE WORLD TRADE CENTER | TITLE: CONNECTION DETAIL 215 A B, C, D | DATE: 5-1-67

REVISIONS

7-28-67
9-15-67
10-5-67

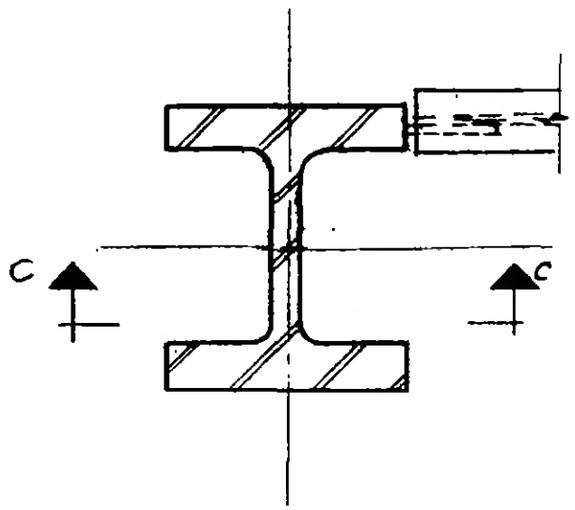

Plan

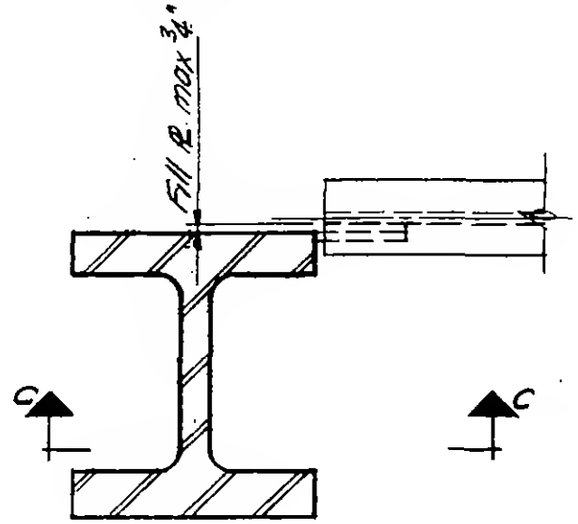

Plan where fill plates are required

SCHEDULE		
Detail	Plate P	Bolts K
215 A	1"	4-1 1/8" ϕ
215 B	5/8"	6-1 1/8" ϕ
215 C	3/4"	14-7/8" ϕ
215 D	5/8"	14-3/4" ϕ

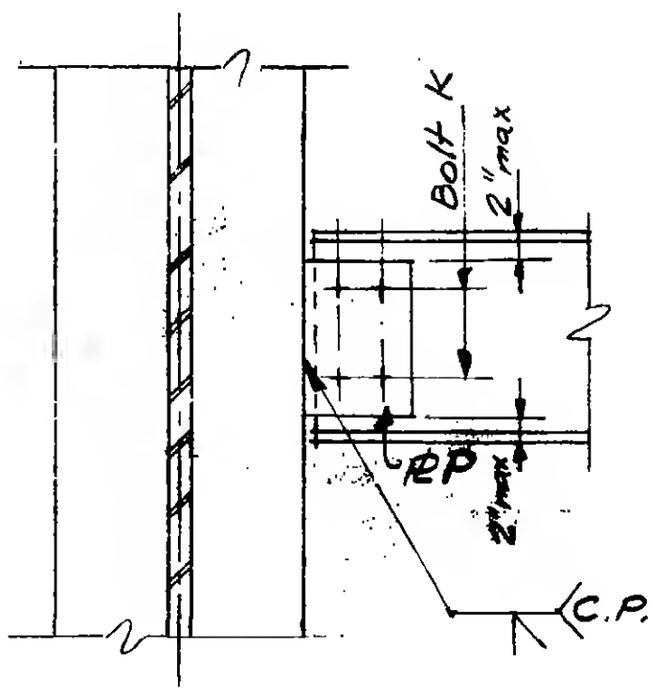

Section c-c

6-AB1-22

WORTHINGTON, SKILLING, HELLE & JACKSON — Civil & Structural Engineers

PROJECT: THE WORLD TRADE CENTER | TITLE: CONNECTION DETAIL 216 A, C | DATE: 5-1-67

REVISIONS

7-28-67
10-5-67

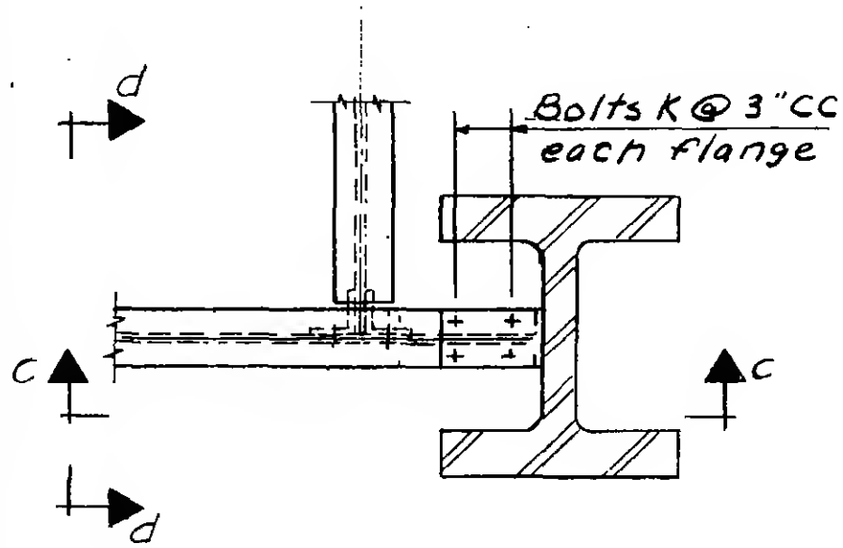

Plan a-a

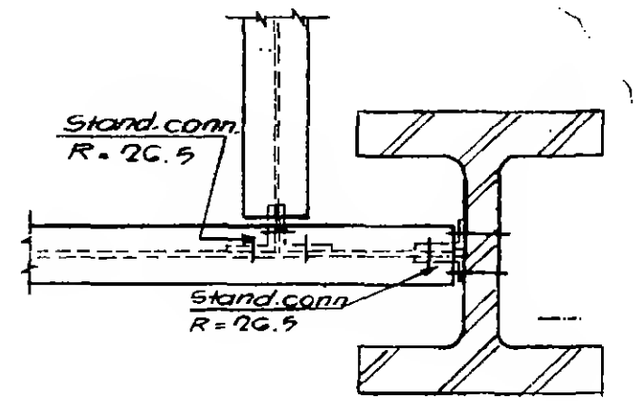

Plan
(For Det. 216C only.)

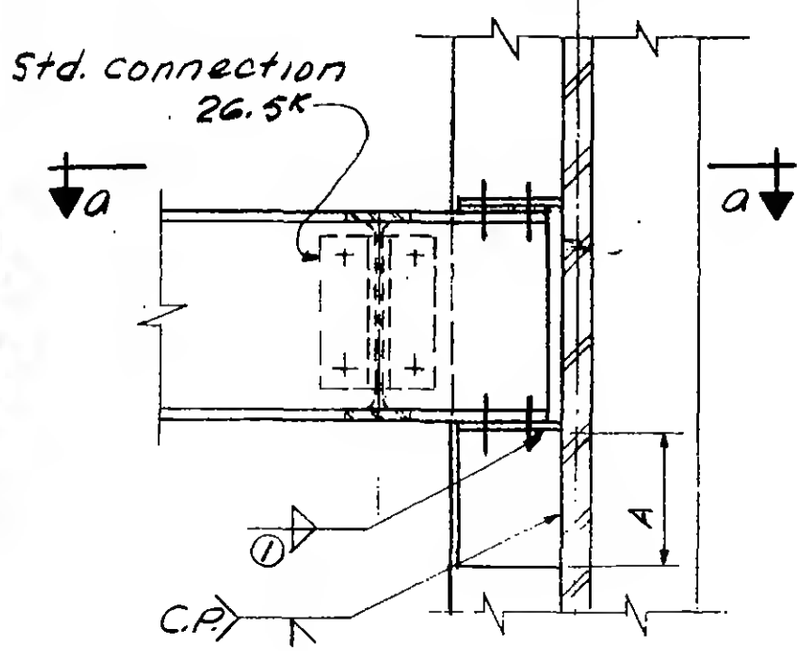

Section c-c

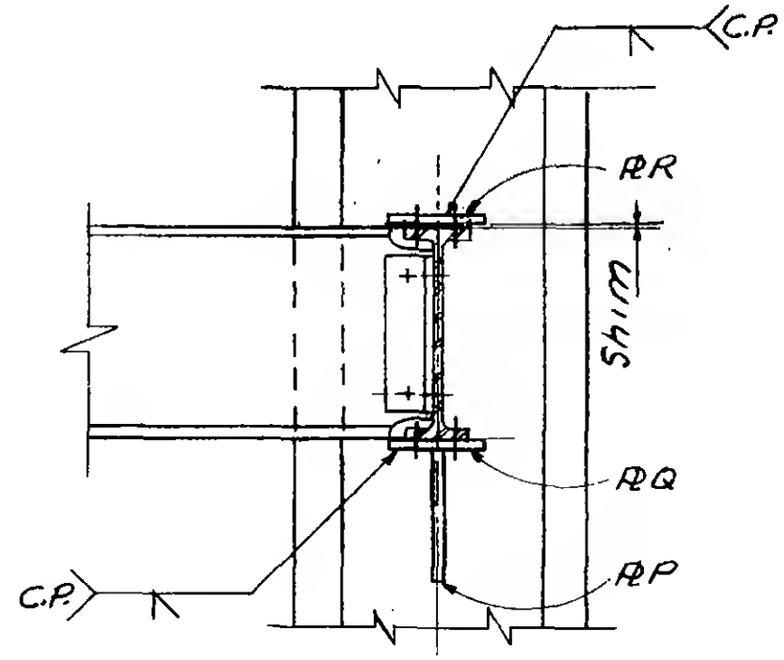

Section d-d

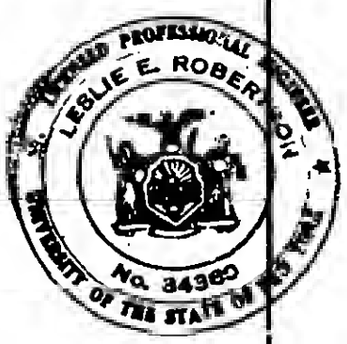

6-AB1-23

SKILLING - HELLE - CHRISTIANSEN - ROBERTSON Structural & Civil Engineers

PROJECT: THE WORLD TRADE CENTER | TITLE: SCHEDULE FOR DETAIL 216 A | DATE: 7-28-67

REVISIONS

	216 A					
PLATES						
P	7" x ½"					
Q	½"					
R	½"					
DIMENSION						
A	1'-0"					
BOLTS						
K	4 - ¾" ϕ					
WELDS						
①	5/16					

6-AB1-23.1

WORTHINGTON, SKILLING, HELLE & JACKSON — Civil & Structural Engineers

PROJECT: THE WORLD TRADE CENTER | TITLE: CONNECTION DETAIL 217B | DATE: 6-5-67

REVISIONS

8-5-67

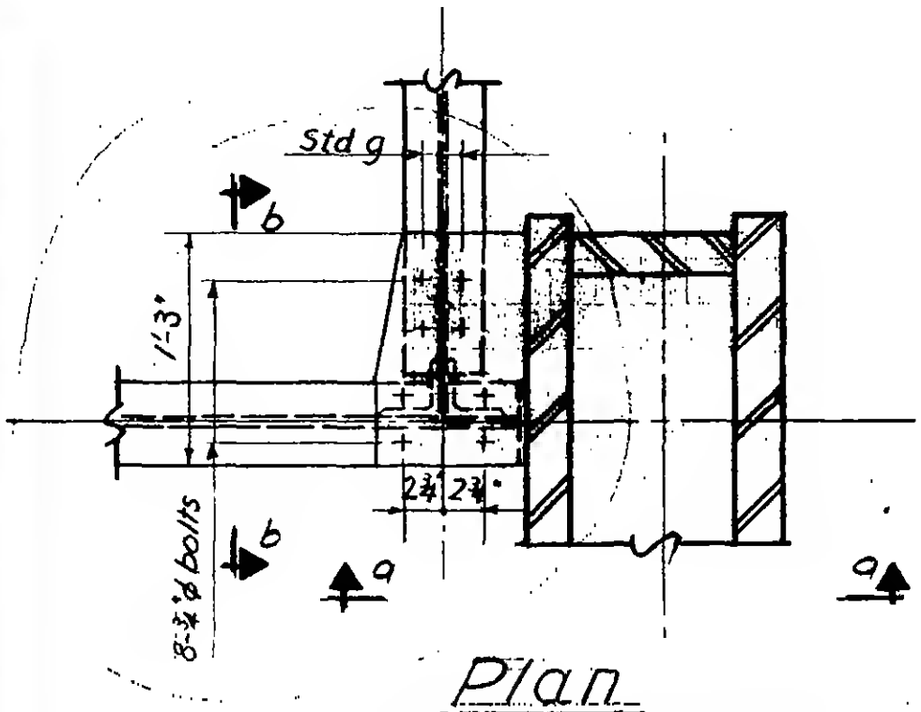

Plan

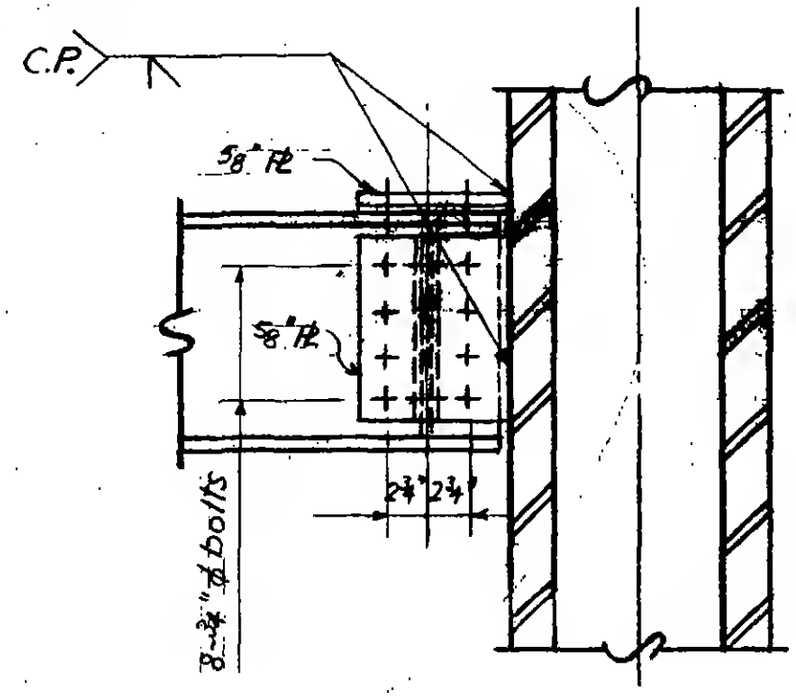

Section a-a

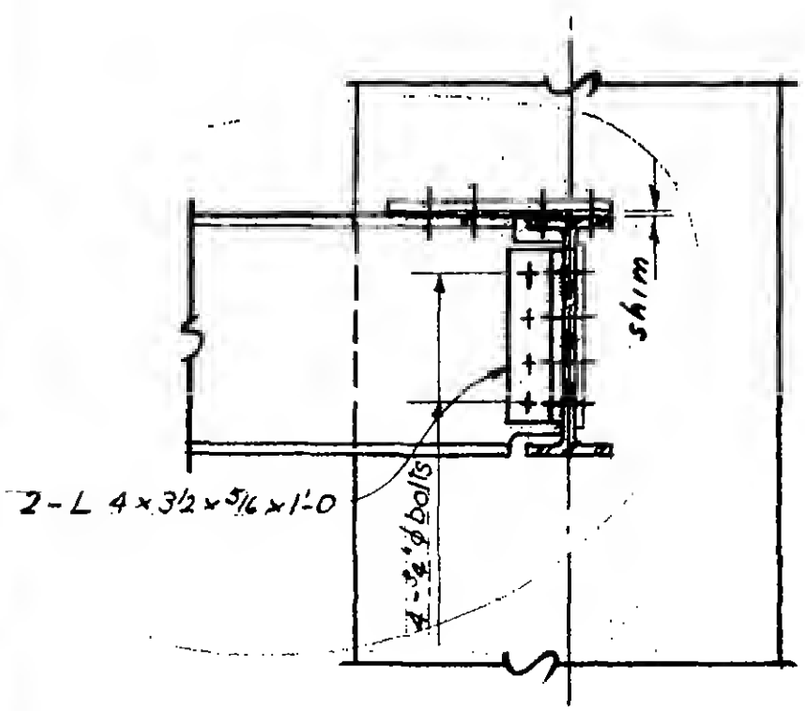

Section b-b

6-AB1-24

WORTHINGTON, SKILLING, HELLE & JACKSON — Civil & Structural Engineers

PROJECT: THE WORLD TRADE CENTER | TITLE: CONNECTION DETAIL 217 A (C) | DATE: 7-5-67

REVISIONS
7-28-67
10-2-67

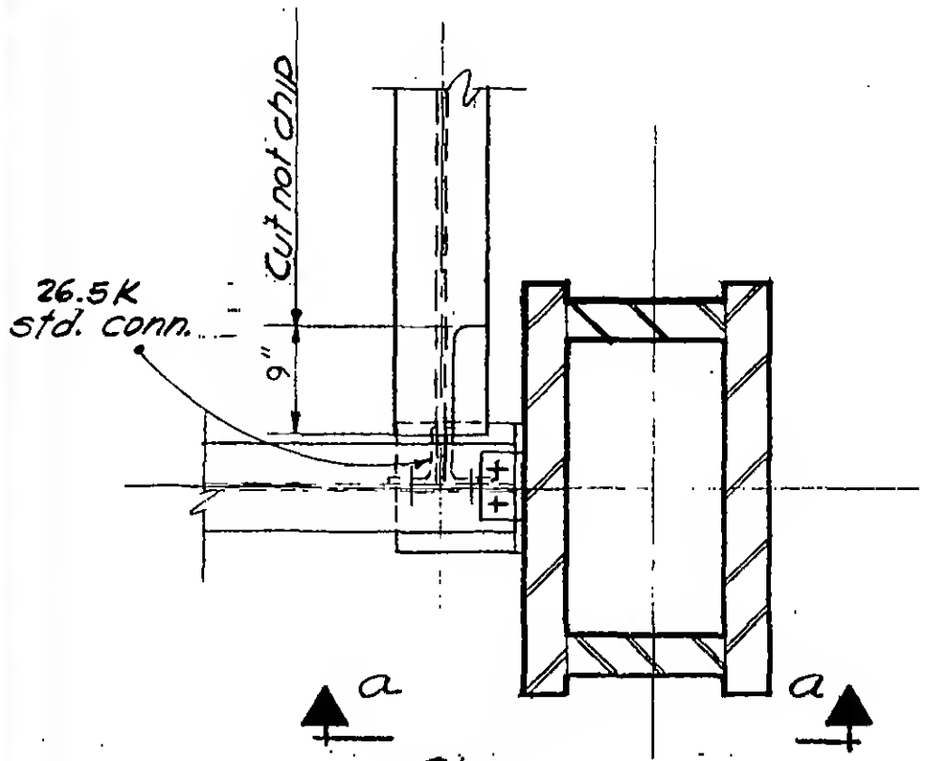

Plan

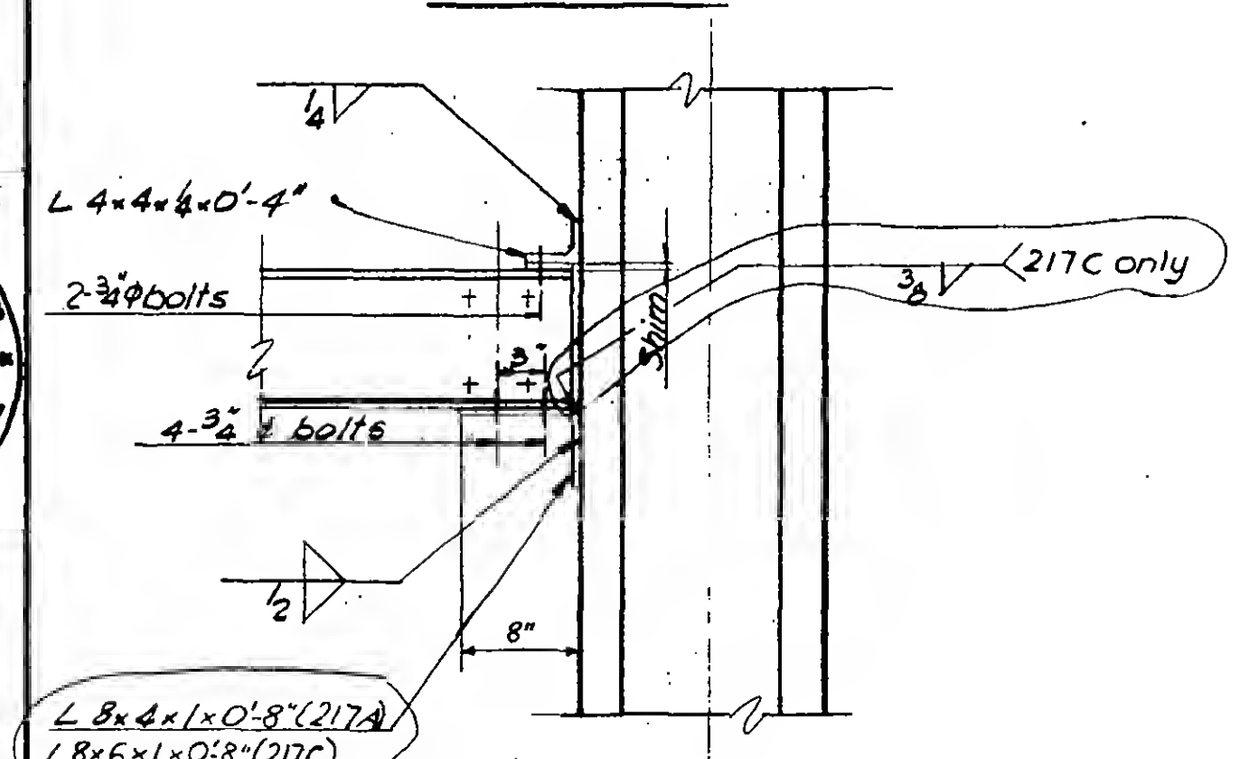

Section a-a

G-AB1-24.1

WORTHINGTON, SKILLING, HELLE & JACKSON — Civil & Structural Engineers

PROJECT: THE WORLD TRADE CENTER | TITLE: CONNECTION DETAIL 218A | DATE: 6-5-67

REVISIONS

8-14-67

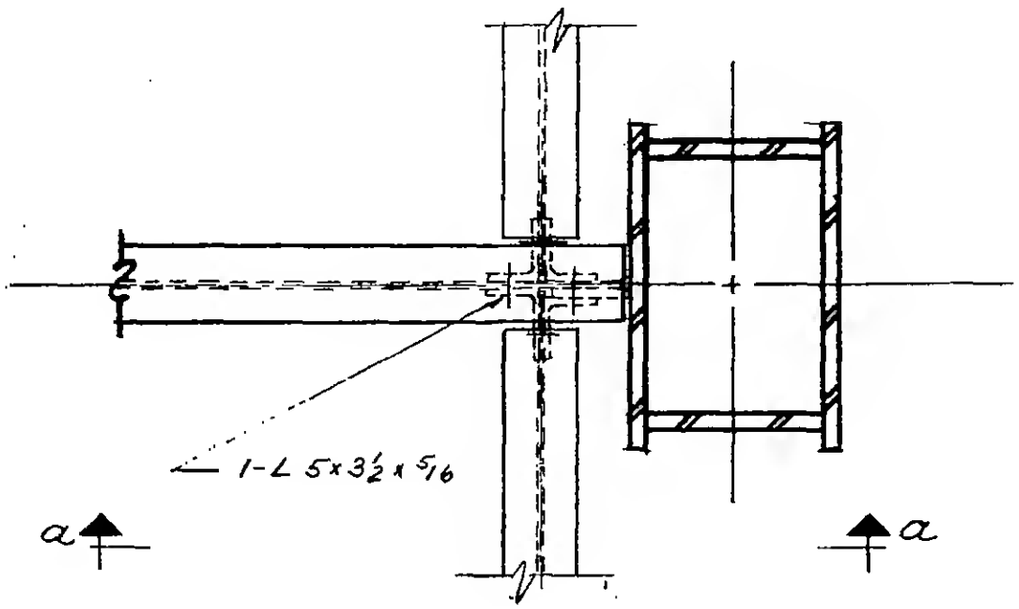

All L's 4x3½x5/16 x 0'-5½ except as noted.

All bolts ¾"φ except as noted.

Plan

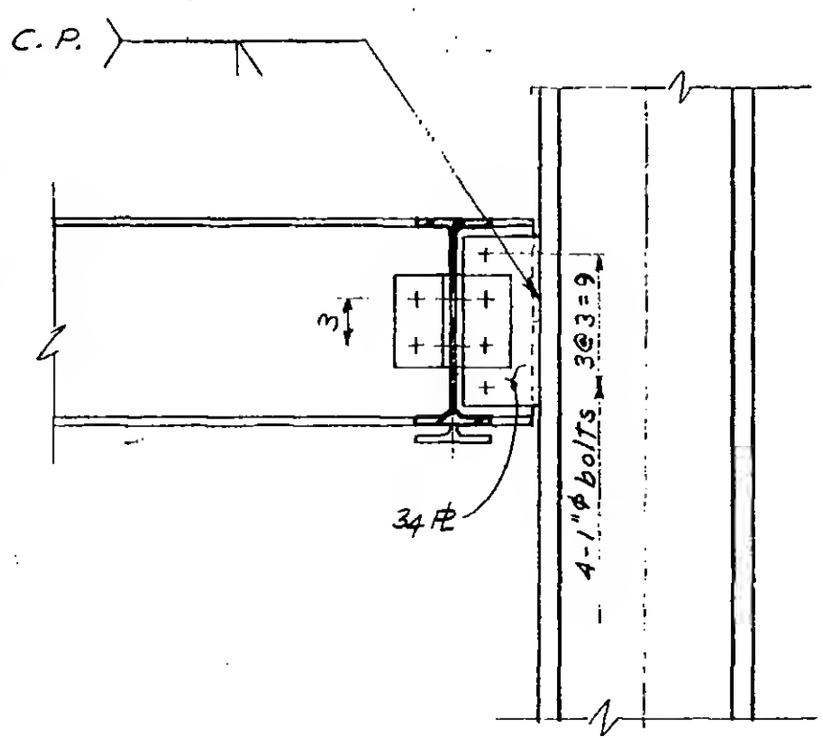

Section a-a

6-AB1-25

SKILLING - HELLE - CHRISTIANSEN - ROBERTSON Structural & Civil Engineers

PROJECT: THE WORLD TRADE CENTER | TITLE: CONNECTION DETAIL 218 B | DATE: 10-2-67

REVISIONS

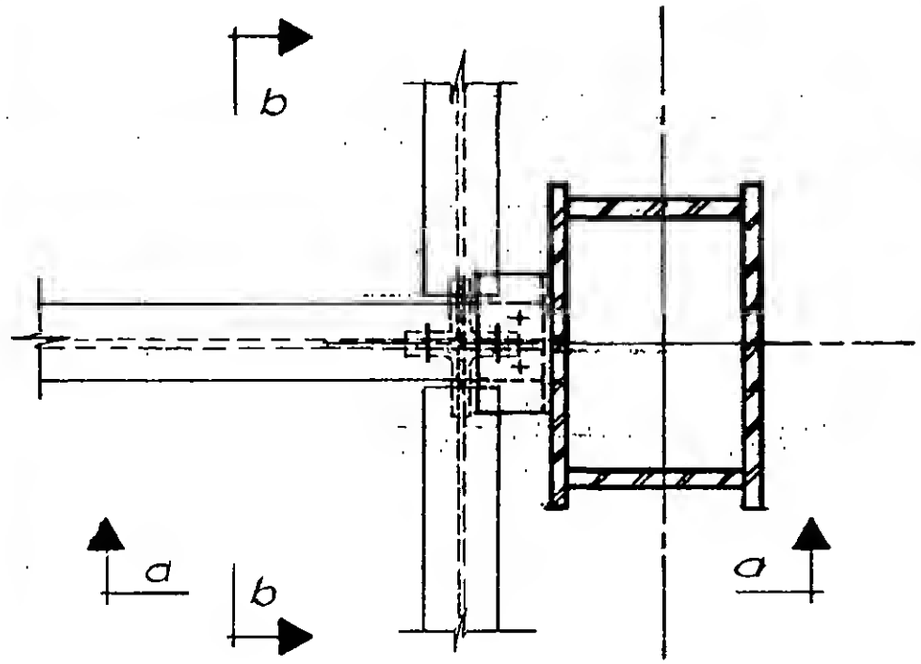

Plan

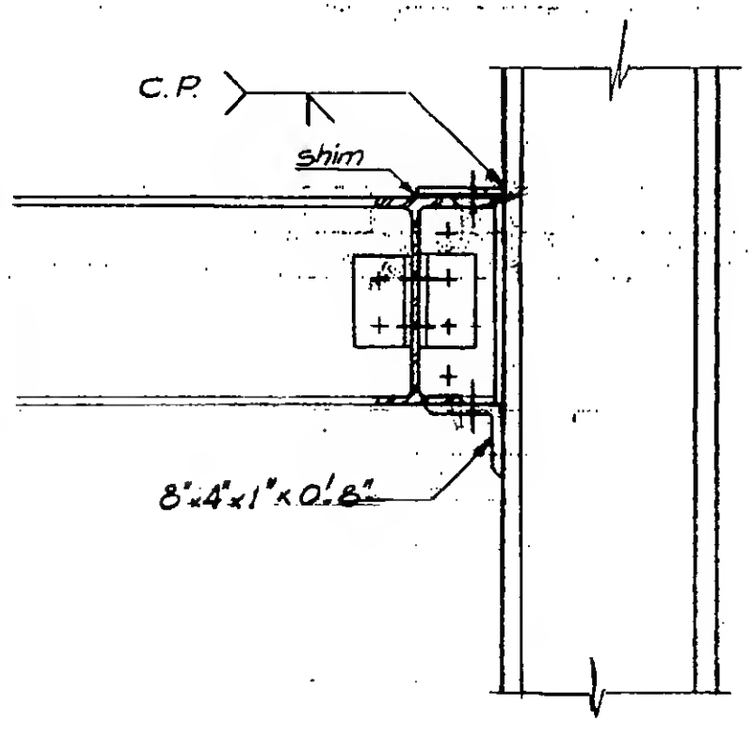

Section a-a

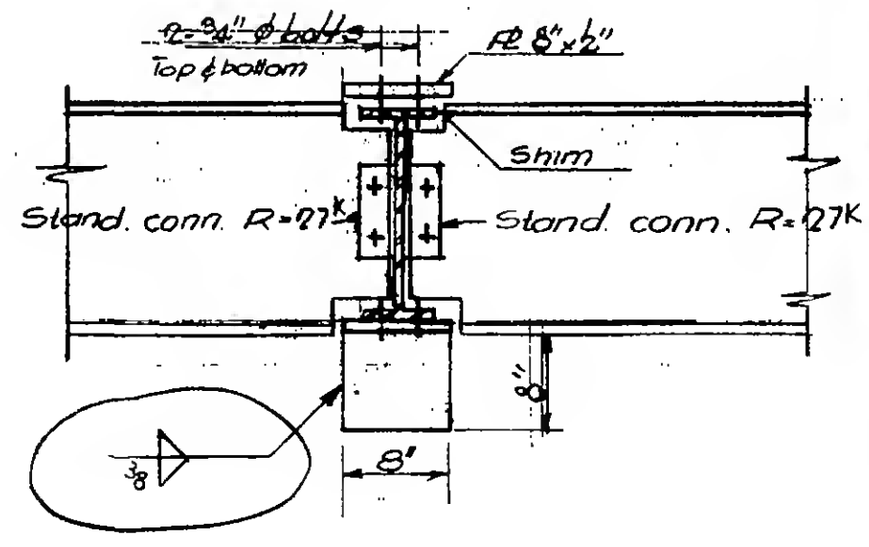

Section b-b

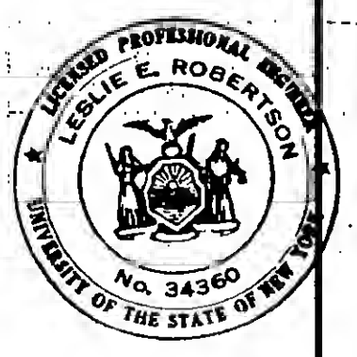

6-AB1-25.1

SKILLING - HELLE - CHRISTIANSEN - ROBERTSON Structural & Civil Engineers

PROJECT THE WORLD TRADE CENTER TITLE CONNECTION DETAIL 218C DATE 10-2-67

REVISIONS

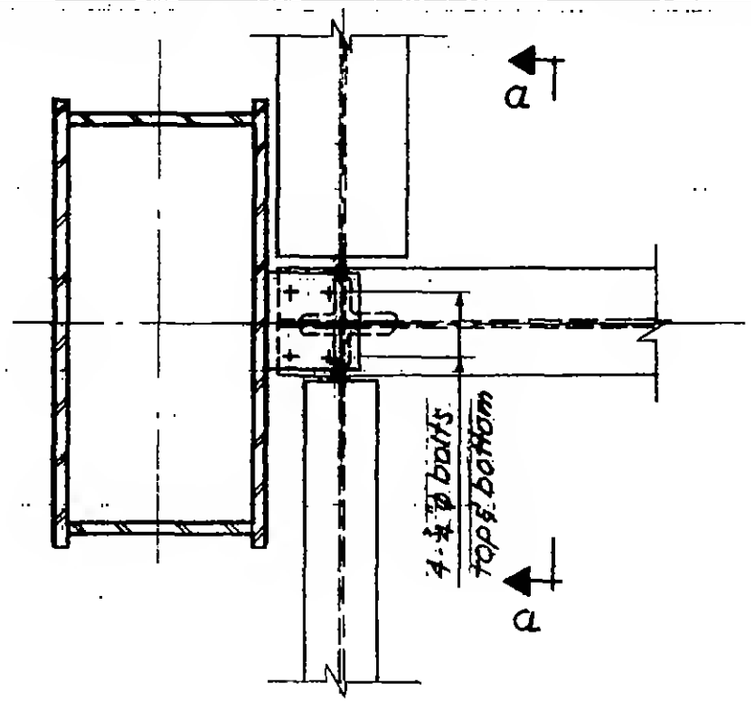

Plan

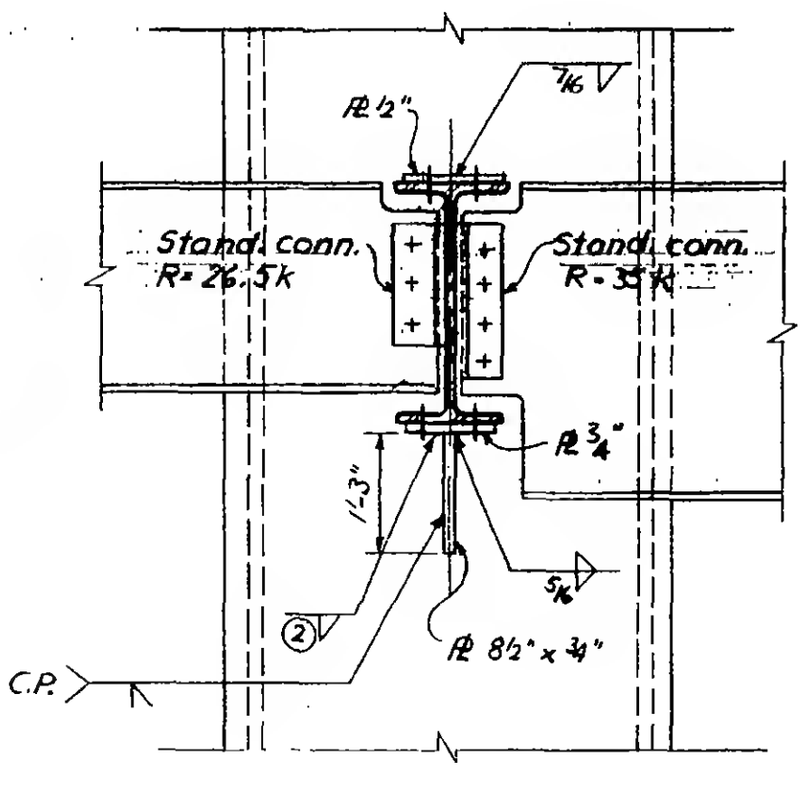

Section a-a

LICENSED PROFESSIONAL ENGINEER
LESLIE E. ROBERTSON
No. 34360
UNIVERSITY OF THE STATE OF NEW YORK

6-ABI-25.2

WORTHINGTON, SKILLING, HELLE & JACKSON — Civil & Structural Engineers

PROJECT: THE WORLD TRADE CENTER | TITLE: CONNECTION DETAIL 219 A-B | DATE: 6-5-67

REVISIONS
10-2-67
11-20-68

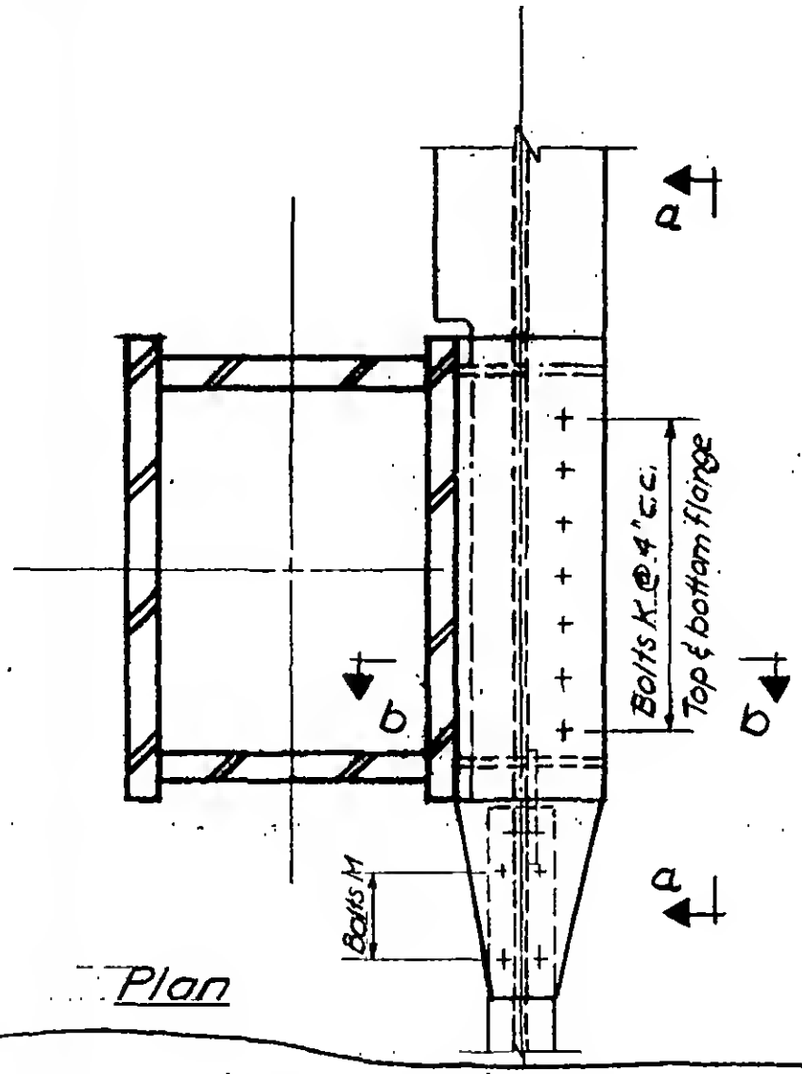

Plan

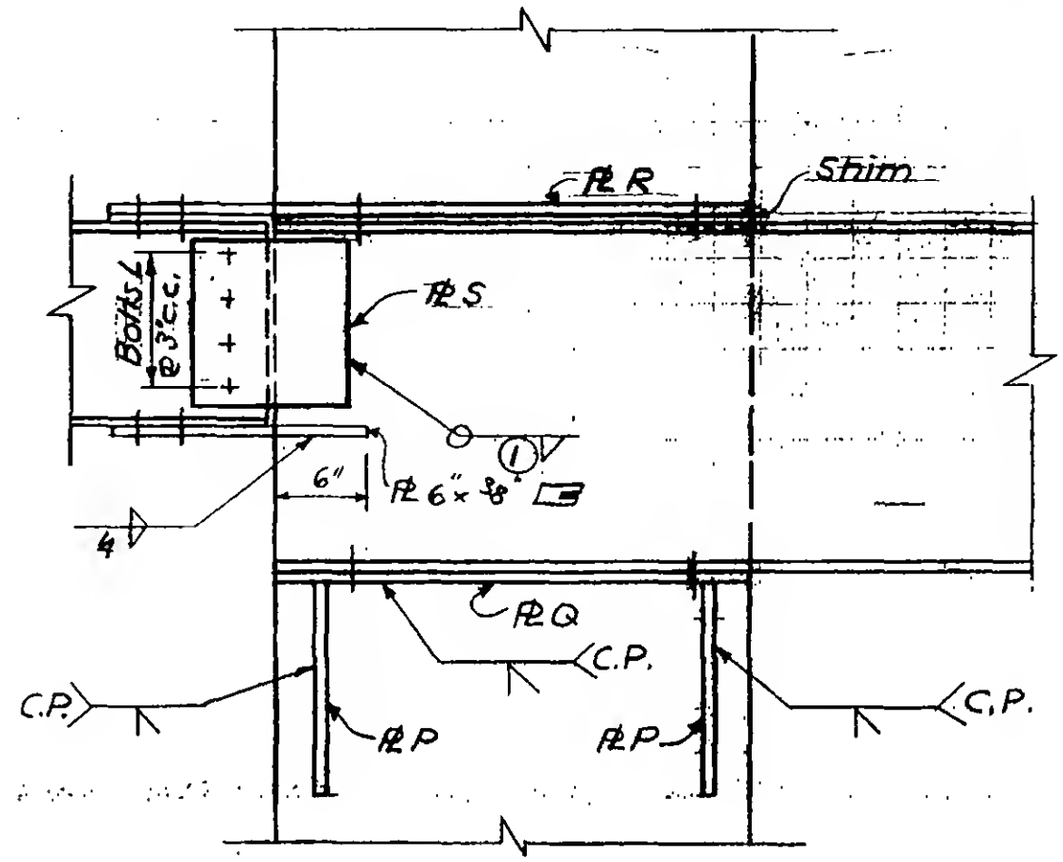

Section a-a

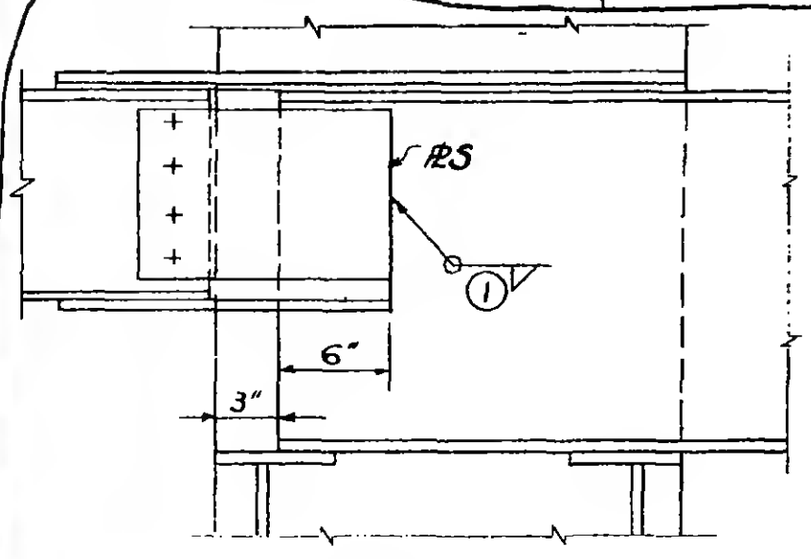

Section a-a
At Floor 75, Tower A, BM 5551 only

Details not shown are the same as shown in main Section a-a which is applicable to other floors.

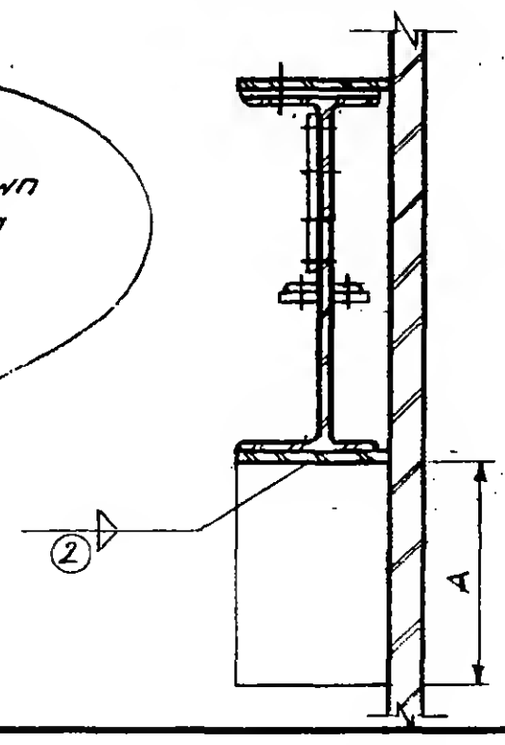

Section b-b

6-AB1-26

LICENSED PROFESSIONAL ENGINEER
LESLIE E. ROBERTSON
No. 34360
REGISTERED STATE OF NEW YORK

SKILLING - HELLE - CHRISTIANSEN - ROBERTSON Structural & Civil Engineers

PROJECT: THE WORLD TRADE CENTER | TITLE: SCHEDULE FOR DETAIL 219 A & B | DATE: 10-2-67

REVISIONS

	219 A	219 B
PLATES		
P	3/4"	7/8"
Q	5/8"	5/8"
R	1/2"	5/8"
S	1/2"	1/2"
DIMENSIONS		
A	1'-3"	1'-3"
BOLTS		
K	7-7/8" ϕ	7-7/8" ϕ
L	4-7/8" ϕ	4-7/8" ϕ
M	4-7/8" ϕ	4-7/8" ϕ
WELDS		
1	5/16	5/16
2	3/8	3/8

LICENSED PROFESSIONAL ENGINEER LESLIE E. ROBERTSON No. 34360 UNIVERSITY OF THE STATE OF NEW YORK

6-ABI-26.1

WORTHINGTON, SKILLING, HELLE & JACKSON — Civil & Structural Engineers

PROJECT: THE WORLD TRADE CENTER | TITLE: CONNECTION DETAIL 220 A,B,C | DATE: 5-1-67

REVISIONS
6-30-67
7-28-67
9-15-67

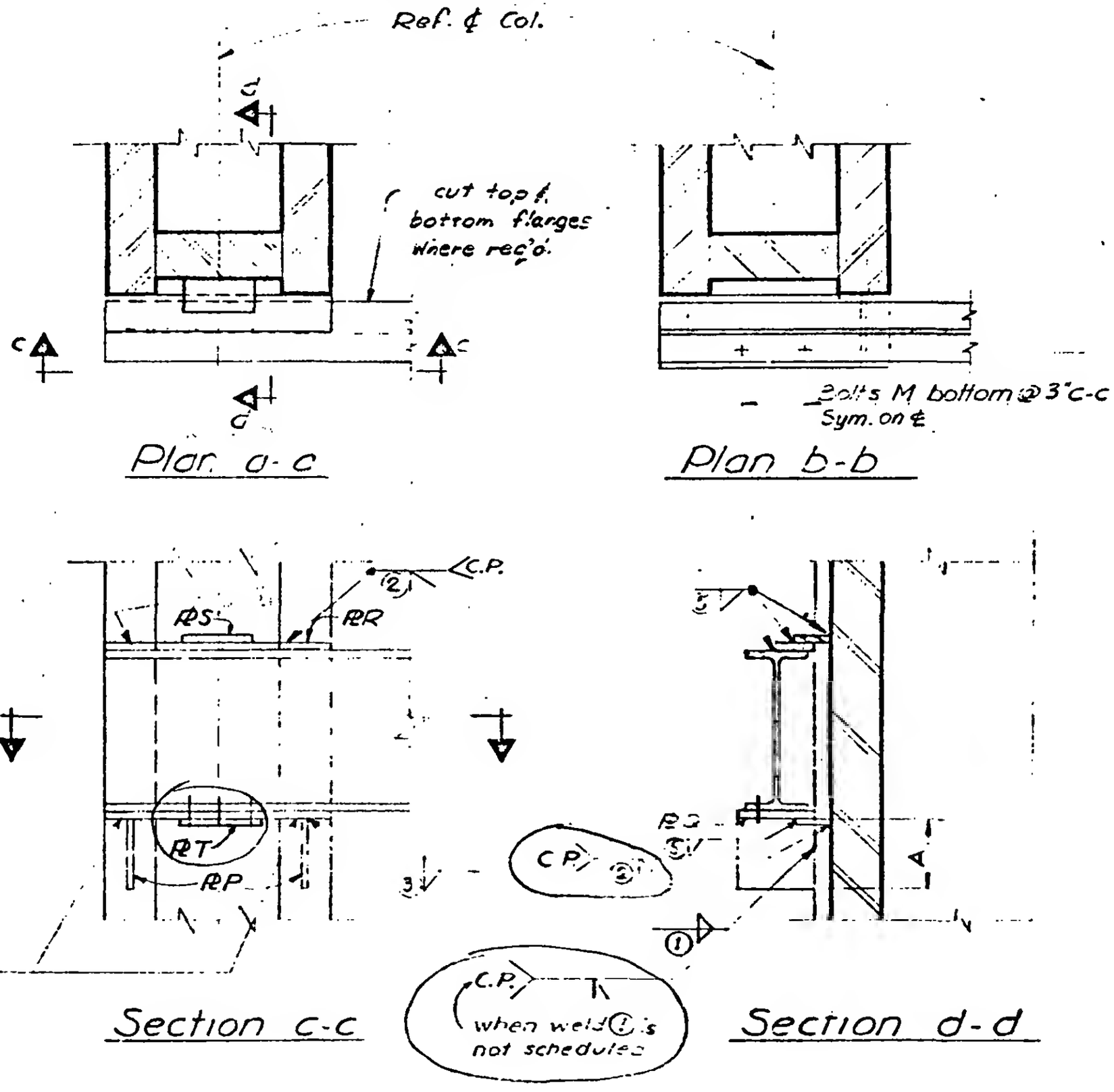

6-A81-27

SKILLING - HELLE - CHRISTIANSEN - ROBERTSON Structural & Civil Engineers

PROJECT: THE WORLD TRADE CENTER | TITLE: SCHEDULE FOR DETAIL 220 A, B, C, D, E & F | DATE: 6-30-67

REVISIONS
7-28-67
9-15-67

REF. DWGS.	6-AB-27	6-AB1-27	6-AB1-27	6-AB1-27.2	6-AB1-27.2	6-AB1-27.2
	220 A	220 B	220 C	220 D	220 E	220 F
PLATES						
P	3/8"	3/8"	1/2"	3/8"	3/8"	5/8"
Q	3/8"	3/8"	1/2"	3/4"	3/4"	1 1/4"
R	3/8"	3/8"	1/2"	3/4"	3/4"	1 1/4"
S	3 x 5/16 x 0'-7"	3 x 5/16 x 0'-7"	3 x 5/16 x 0'-7"	—	—	1 1/4"
T	—	—	—	—	—	—
DIMENSIONS						
A	1'-0"	1'-7"	1'-6"	1'-0"	1'-0"	1'-4"
BOLTS						
K	—	—	—			—
M	4 - 3/4" ϕ (A325)	4 - 3/4" ϕ (A325)	4 - 3/4" ϕ (A325)	—	—	8 - 1" ϕ
WELDS						
①	3/8	3/8	1/2	—	—	—
②	C.P.	C.P.	C.P.	C.P.	C.P.	C.P.
③	5/16	5/16	5/16	5/16	5/16	5/16
④	—	—	—	C.P.	C.P.	C.P.
⑤	5/16	5/16	5/16	—	—	1
⑥	—	—	—	—	—	—

6-AB1-27.1

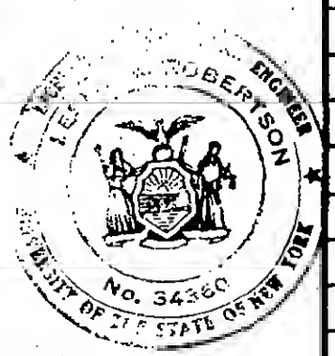

WORTHINGTON, SKILLING, HELLE & JACKSON — Civil & Structural Engineers

PROJECT: THE WORLD TRADE CENTER | TITLE: [redacted] D, E, F, K, L, X, Y | DATE: 7-28-67

REVISIONS
9-15-67
2-9-68

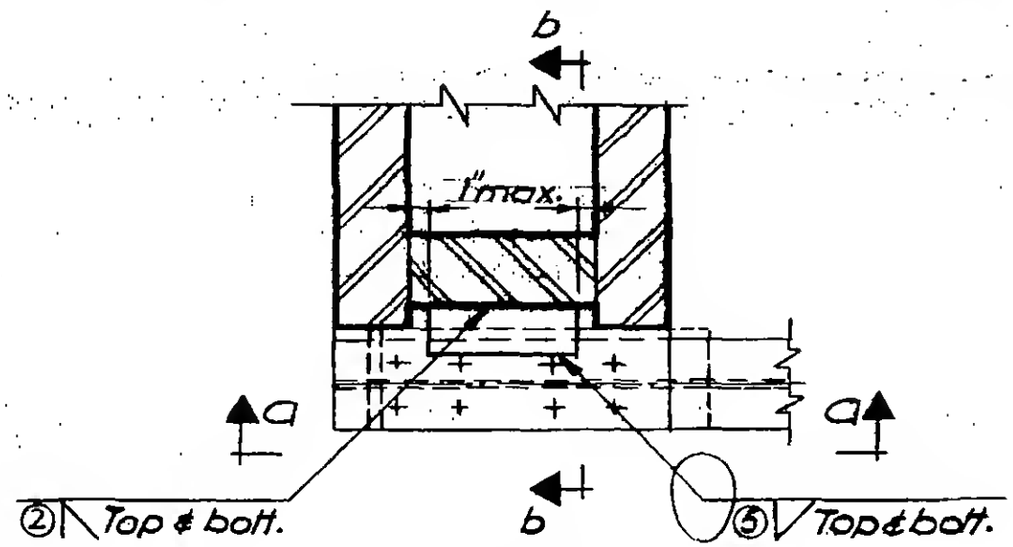

Plan
~~220 D, E, F~~, L, X, Y

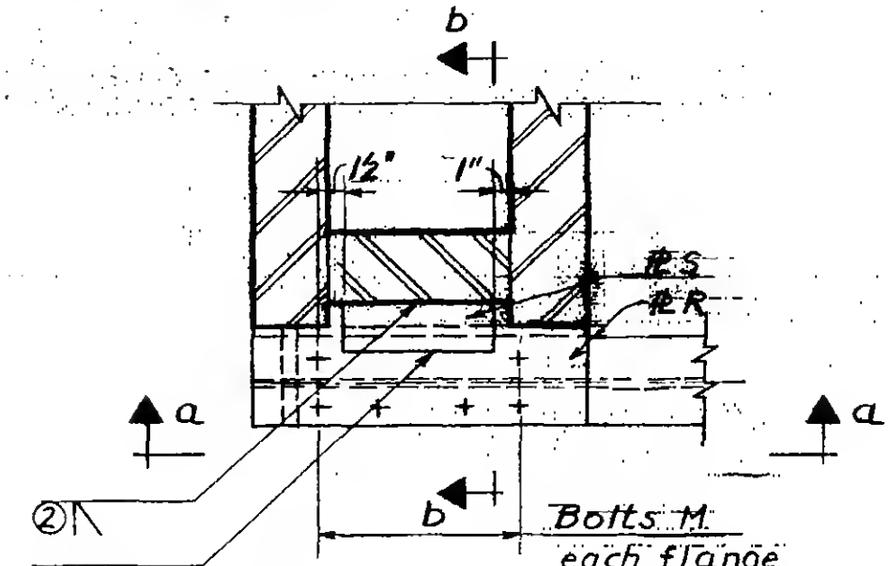

Plan
220 K

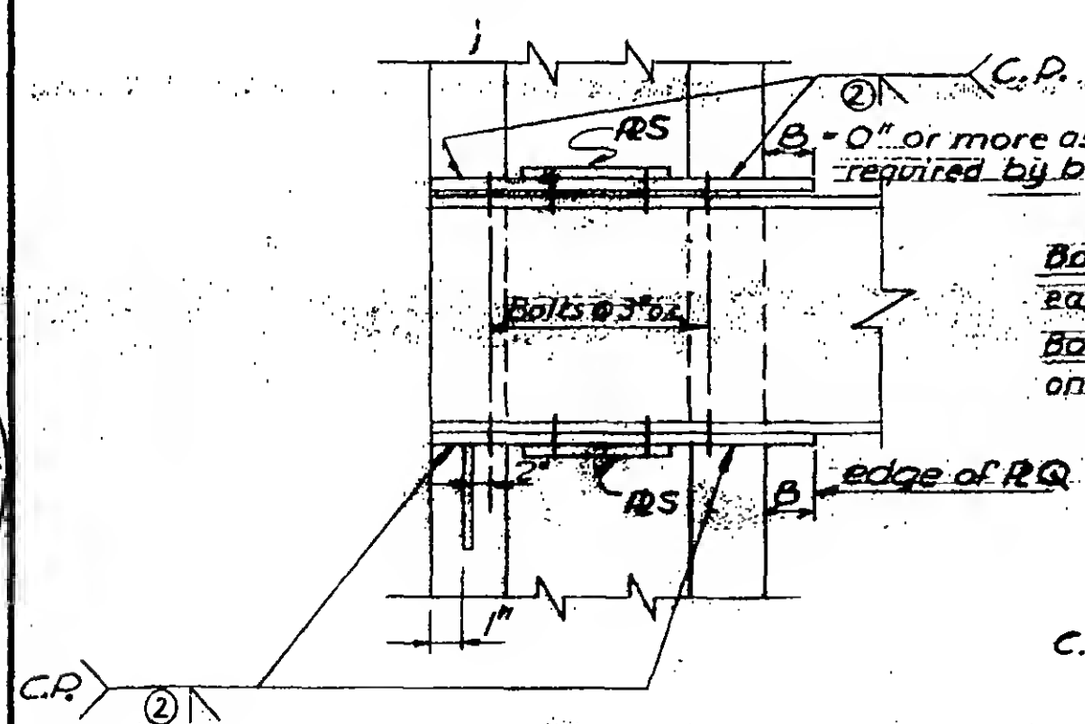

Section a-a

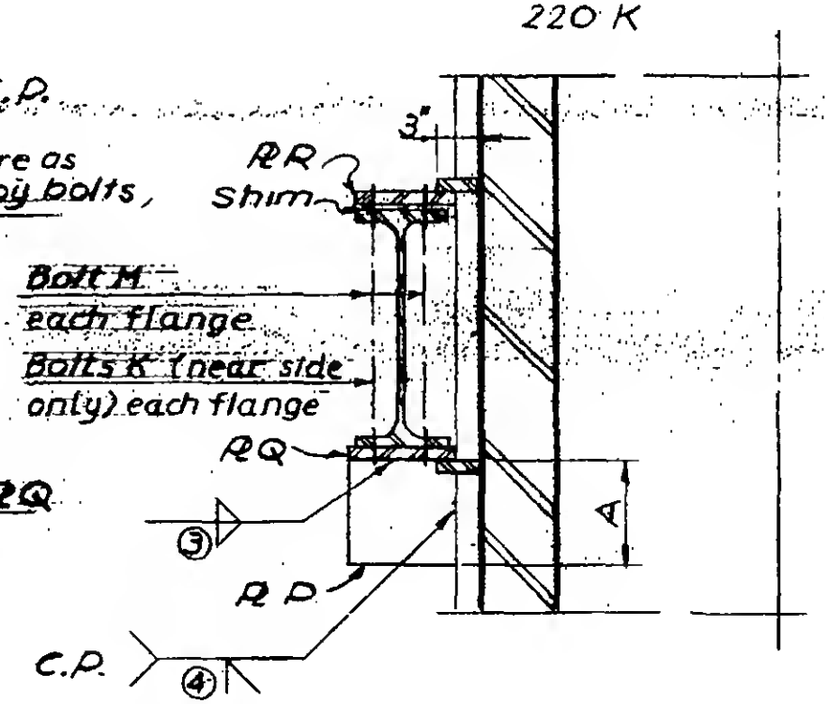

Section b-b

G-ABI-27.2

WORTHINGTON, SKILLING, HELLE & JACKSON — Civil & Structural Engineers

PROJECT: THE WORLD TRADE CENTER | TITLE: CONNECTION DETAIL 220 G,H,I,P,Q,S,T,U,W | DATE: 7-28-67

REVISIONS
9-15-67
10-2-67
10-31-67

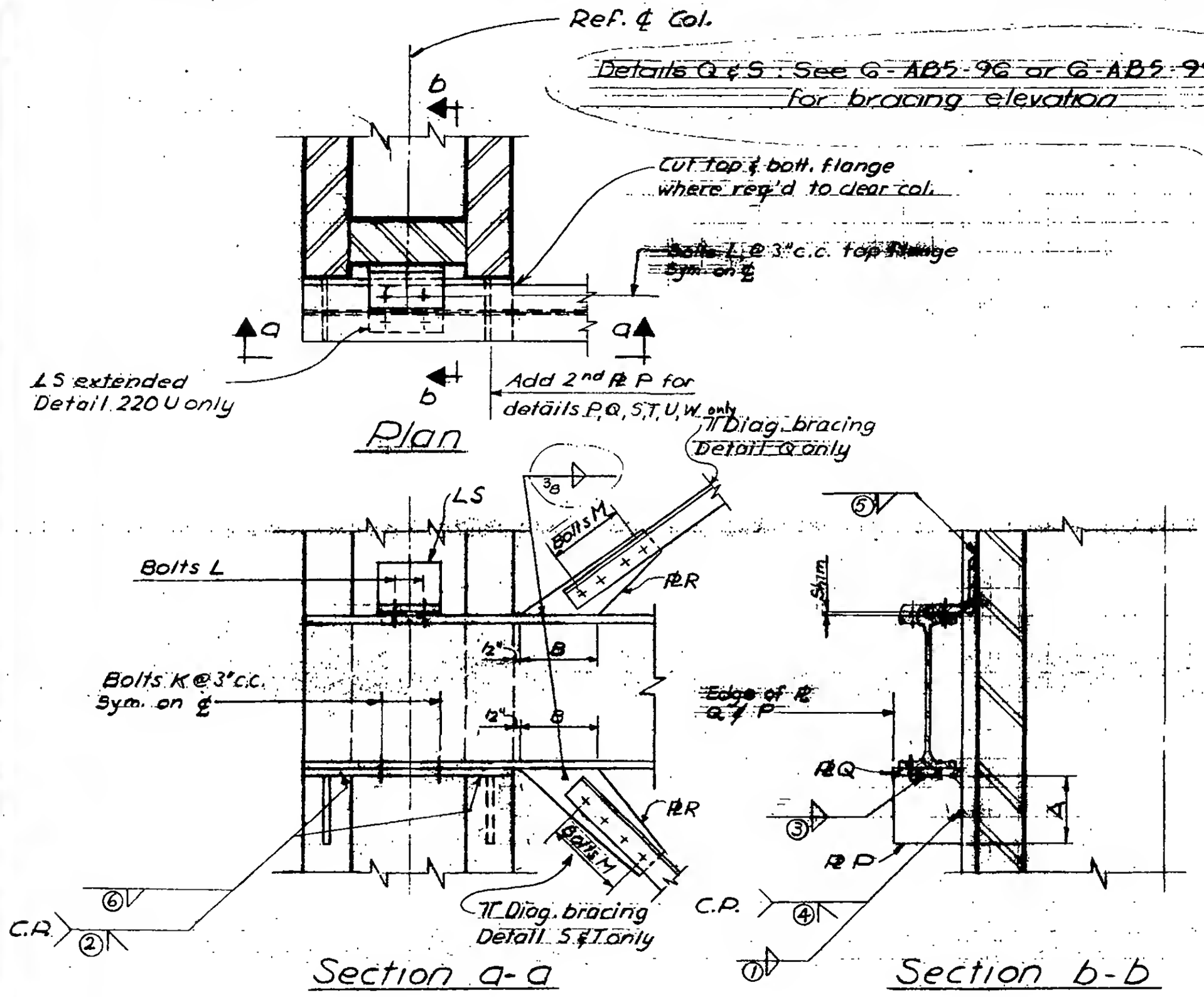

6-AB1-27.3

WORTHINGTON, SKILLING, HELLE & JACKSON — Civil & Structural Engineers

PROJECT: THE WORLD TRADE CENTER | TITLE: CONNECTION DETAIL 220 J, M & N | DATE: 7-26-67

REVISIONS
9-15-67
11-10-67

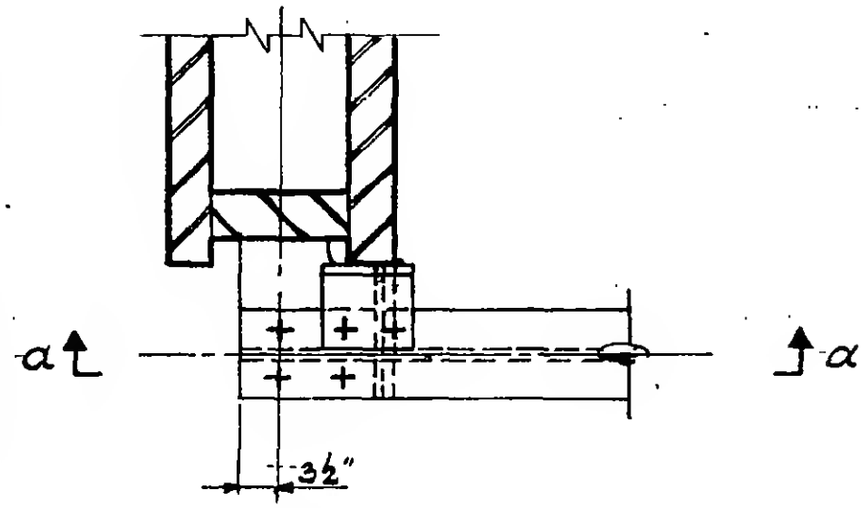

PLAN
Details 220 J & N

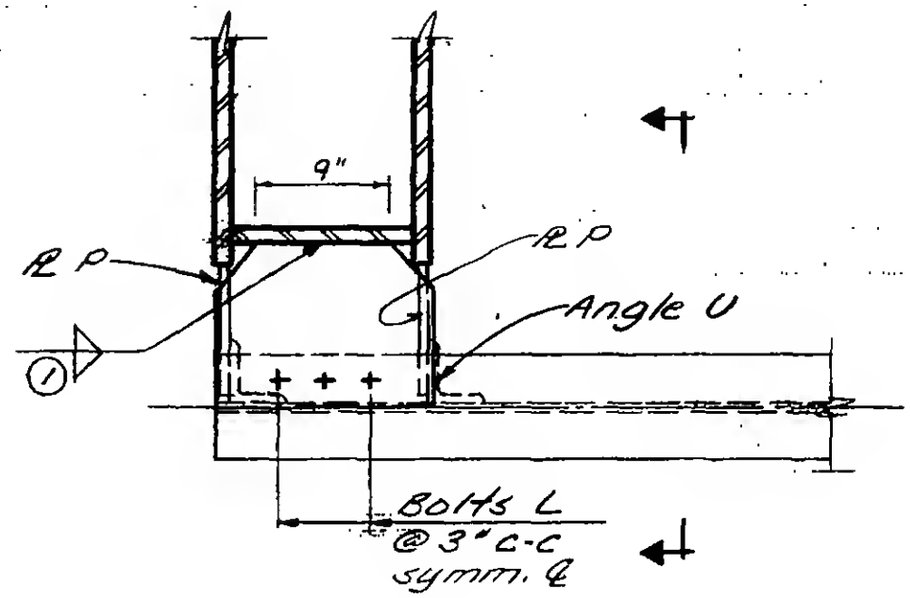

Plan
Detail 220 M

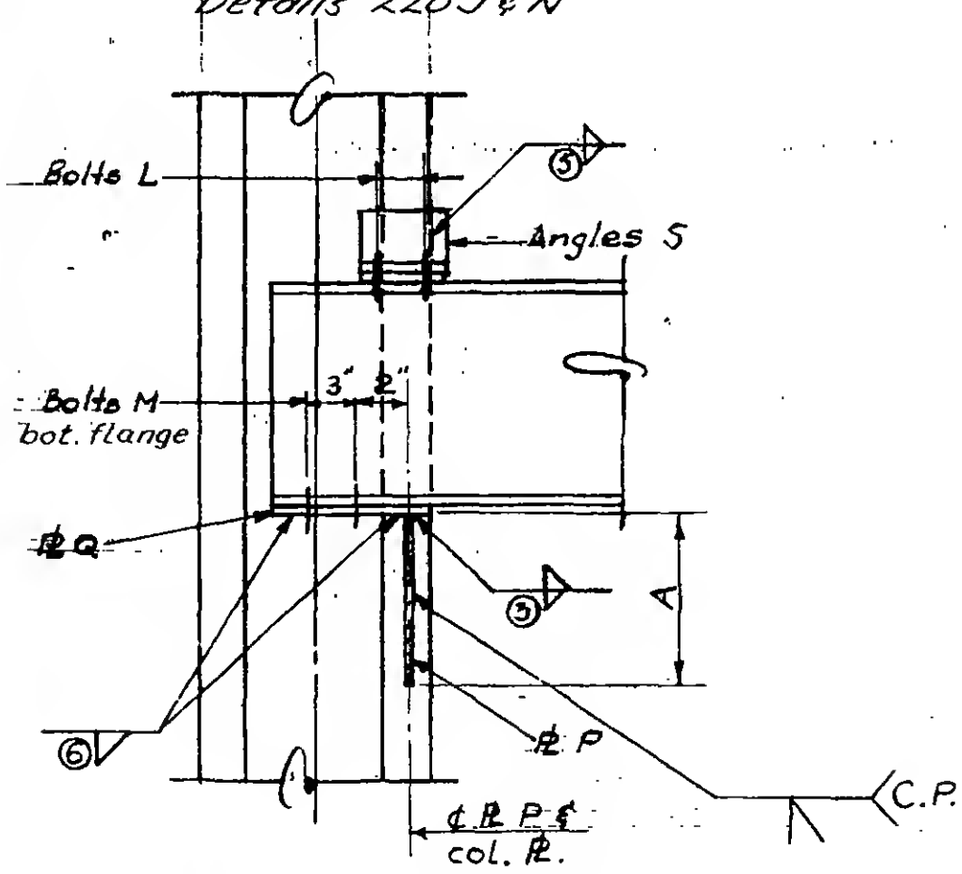

Section a-a

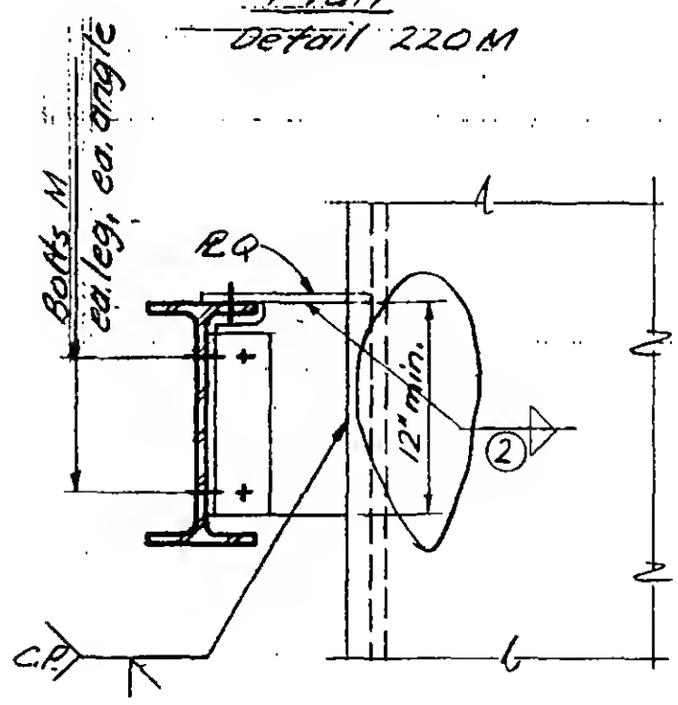

Section a-a

LICENSED PROFESSIONAL ENGINEER
LESLIE E. ROBERTSON
No. 34360
UNIVERSITY OF THE STATE OF NEW YORK

G-AB1-27.4

SKILLING - HELLE - CHRISTIANSEN - ROBERTSON Structural & Civil Engineers

PROJECT: THE WORLD TRADE CENTER | TITLE: SCHEDULE FOR DETAIL 220 G-L | DATE: 7-28-67

REVISIONS
9-15-67

REF. DWGS.	6-ABI-27.3	6-ABI-27.3	6-ABI-27.3	6-ABI-27.4	6-ABI-27.2	6-ABI-27.2
	220 G	220 H	220 I	220 J	220 K	220 L
PLATES						
P	3/8"	5/8"	1/2"	1/2"	5/8"	5/8"
Q	5/8"	3/4"	1/2"	1/2"	7/8"	1"
R	—	—	—	—	7/8"	1"
S	—	—	—	—	3/4"	1/2"
DIMENSIONS						
A	1'-4"	1'-4"	1'-4"	1'-4"	1'-2"	1'-1"
ANGLES						
S	4 x 4 x 5/16	4 x 7 x 3/8	4 x 7 x 3/8	4 x 7 x 3/8	—	—
BOLTS						
K	3 - 3/4" ϕ	3'- 3/4" ϕ	3 - 3/4" ϕ	—	—	—
L	2 - 3/4" ϕ	2 - 3/4" ϕ	2 - 3/4" ϕ	2 - 3/4" ϕ	—	—
M	—	—	—	4 - 3/4" ϕ	6 - 1'8" ϕ	8 - 3/4" ϕ
WELDS						
①	—	—	—	—	—	—
②	—	—	—	—	C.P.	C.P.
③	1/4	1/4	1/4	5/16	5/16	5/16
④	C.P.	C.P.	C.P.	C.P.	C.P.	C.P.
⑤	1/4	5/16	5/16	3/8	5/8	7/16
⑥	1/2	1/2	1/2	1/2	—	—

6-ABI-27.5

No. 34360 STATE OF NEW YORK

SKILLING - HELLE - CHRISTIANSEN - ROBERTSON Structural & Civil Engineers

PROJECT: THE WORLD TRADE CENTER | TITLE: SCHEDULE FOR DETAIL 220 M, N, P, Q, R, S | DATE: 9-15-67

REVISIONS
10-2-67
10-31-67
11-10-67

REF. DWGS.	6-AB1-27.4	6-AB1-27.4	6-AB1-27.3	6-AB1-27-3	6-AB1-27.7	6-AB1-27.3
	220M	220N	220P	220Q	220R	220S
PLATES						
P	1/2"	3/4"	5/8"	3/4"	5/8"	1/2"
Q	3/8"	3/4"	5/8"	3/4"	3/4"	1/2"
R	—	—	—	5/8"	3/4"	5/8"
S	—	—	—	—	5/8"	—
T	—	—	—	—	4" x 3/4"	—
DIMENSIONS						
A	—	1'-2"	1'-2"	1'-4"	1'-2"	1'-1"
B	—	—	—	0'-9" min.	0'-9" min.	0'-9" min.
ANGLES						
S	—	4 x 4 x 3/8	6 x 4 x 7/16	8 x 4 x 7/16 x 0'-6"	—	6 x 4 x 3/8 x 0'-6"
U	4 x 3 1/2 x 5/16	—	—	—	—	—
BOLTS						
K	—	—	4-3/4"φ	4-3/4"φ	6-1 1/8"φ (A490)	4-3/4"φ
L	3-3/4"φ	2-3/4"φ	2-3/4"φ	2-3/4"φ	4-7/8"φ	2-3/4"φ
M	4-3/4"φ	3-7/8"φ	—	4-7/8"φ	—	4-7/8"φ
WELDS						
1	5/16	—	—	—	5/16	—
2	5/16	—	C.P.	C.P.	5/8	C.P.
3	—	5/16	5/16	5/16	3/8	5/16
4	—	—	C.P.	C.P.	—	C.P.
5	—	5/16	5/16	5/16	—	5/16
6	—	5/16	—	—	—	—

6-AB1-27.6

SKILLING - HELLE - CHRISTIANSEN - ROBERTSON Structural & Civil Engineers

PROJECT	TITLE	DATE
THE WORLD TRADE CENTER	CONNECTION DETAIL 220R, V	10-2-67

REVISIONS

10-31-67

Detail 220 R & V : See 6-AB5-96 for bracing elevation

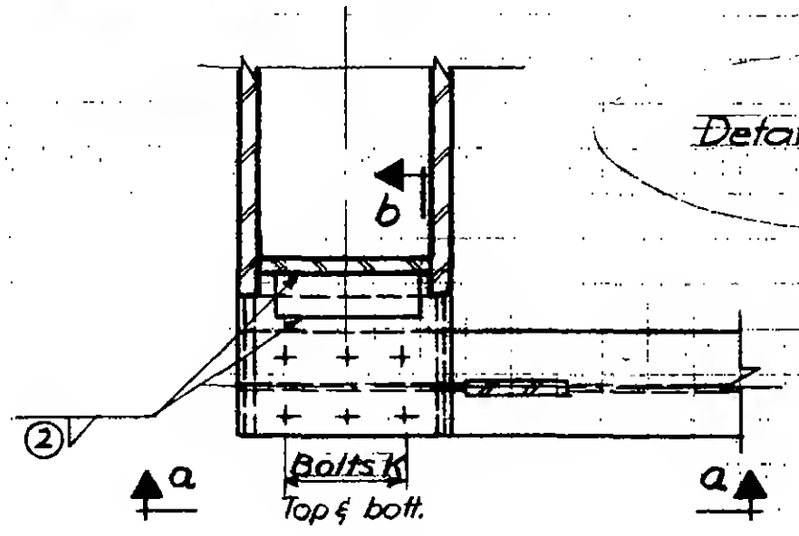

Plan

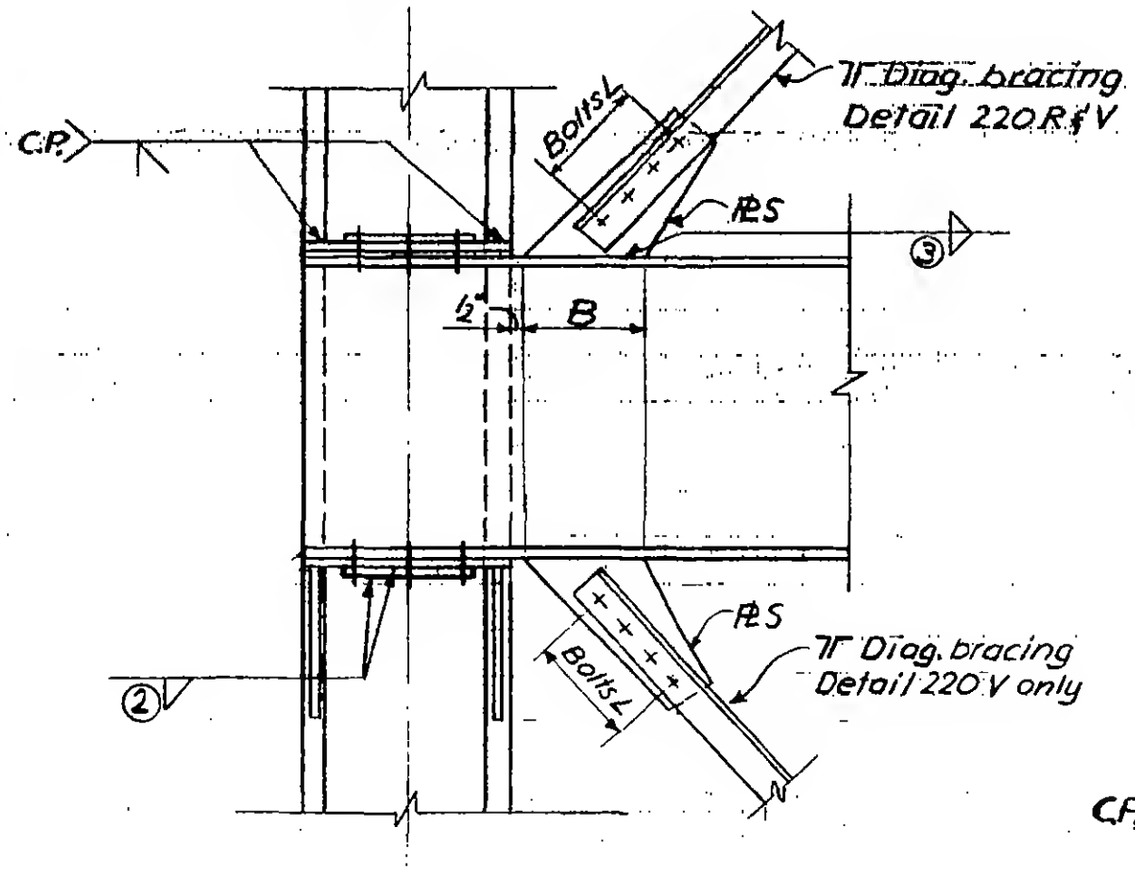

Section a-a

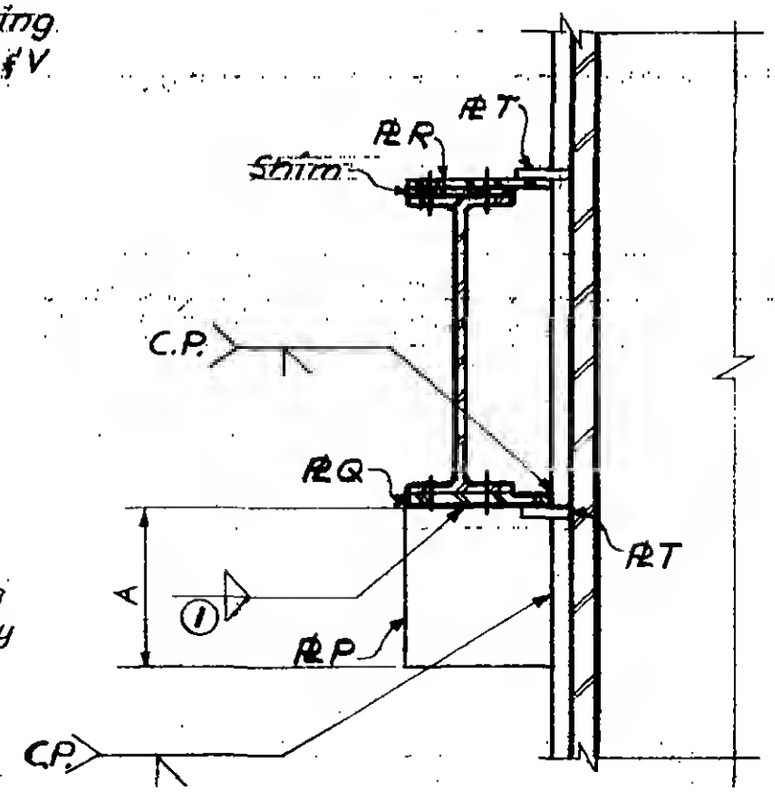

Section b-b

6-AB1-27.7

SKILLING - HELLE - CHRISTIANSEN - ROBERTSON Structural & Civil Engineers

PROJECT: THE WORLD TRADE CENTER | TITLE: SCHEDULE FOR DETAIL 220 T, U, V, W, X, Y | DATE: 10-2-67

REVISIONS

10-31-67
2-9-68

REF. DWGS.	6-ABI-27.3	6-ABI-27.3	6-ABI-27.7	6-ABI-27.3	6-ABI-27.2	6-ABI-27.2
	220 T	220 U	220 V	220 W	220 X	220 Y
PLATES						
P	5/8"	5/8"	5/8"	3/4"	7/8	1"
Q	5/8"	5/8"	3/4"	3/4"	7/8	1"
R	5/8"	—	3/4"	—	7/8	3/4"
S	—	—	5/8"	—	4 x 5/8	3/4"
T	—	—	4" x 5/8"	—	—	—
ANGLES						
S	6 x 4 x 3/8 x 0'-6"	7 x 4 x 3/8 x 0'-6"	—	6 x 4 x 3/8 x 0'-6"	—	—
DIMENSIONS						
A	1'-0"	0'-10"	1'-2"	1'-1"	1'-2"	1'-4"
B	0'-8"	—	0'-9" min.	—	—	—
BOLTS						
K	4 - 3/4" ϕ	4 - 3/4" ϕ	6 - 7/8" ϕ	4 - 3/4" ϕ	4 - 1" ϕ	—
L	2 - 3/4" ϕ	2 - 3/4" ϕ	4 - 7/8" ϕ	2 - 3/4" ϕ	2 - 1" ϕ	—
M	4 - 3/4" ϕ	—	—	—	—	10 - 1 1/8" ϕ
WELDS						
1	—	—	5/16	—	—	—
2	C.P.	C.P.	9/16	C.P.	C.P.	C.P.
3	5/16	5/16	3/8	3/8	3/8	3/8
4	C.P.	C.P.	—	C.P.	C.P.	C.P.
5	5/16	5/16	—	5/16	5/16	3/4
6	—	—	—	—	—	—

LICENSED PROFESSIONAL ENGINEER
LESLIE E. ROBERTSON
No. 34360
UNIVERSITY OF THE STATE OF NEW YORK

6-ABI-27.8

SKILLING - HELLE - CHRISTIANSEN - ROBERTSON Structural & Civil Engineers

PROJECT THE WORLD TRADE CENTER | TITLE CONNECTION DETAIL 221 A | DATE 6-5-67

REVISIONS

10-2-67

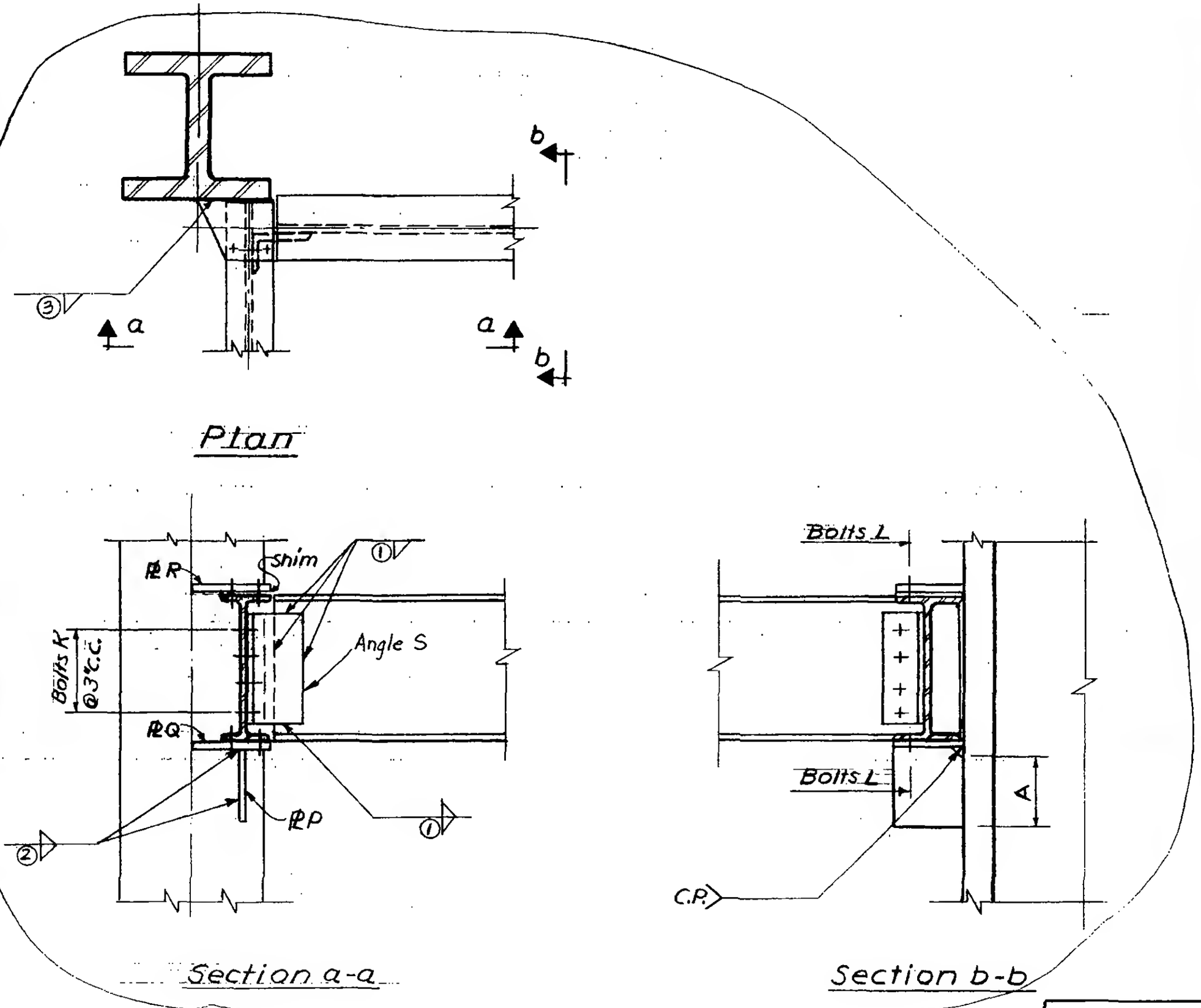

6-ABI-28

SKILLING - HELLE - CHRISTIANSEN - ROBERTSON Structural & Civil Engineers

PROJECT: THE WORLD TRADE CENTER | TITLE: SCHEDULE FOR DETAIL 221 A | DATE: 10-2-67

REVISIONS

	221 A
PLATES	
P	9 × 11/16
Q	11/16
R	1/2
ANGLES	
S	6 × 4 × 7/16 × 1'-0"
DIMENSIONS	
A	1'-2"
BOLTS	
K	4 - 7/8" ϕ
L	2 - 7/8" ϕ
WELDS	
①	3/8
②	1/2
③	3/8

LICENSED PROFESSIONAL ENGINEER
LESLIE E. ROBERTSON
No. 34360
UNIVERSITY OF THE STATE OF NEW YORK

6-AB1-28.1

WORTHINGTON, SKILLING, HELLE & JACKSON — Civil & Structural Engineers

PROJECT: THE WORLD TRADE CENTER | TITLE: CONNECTION DETAIL 222 A, B | DATE: 6-30-67

REVISIONS

7-28-67

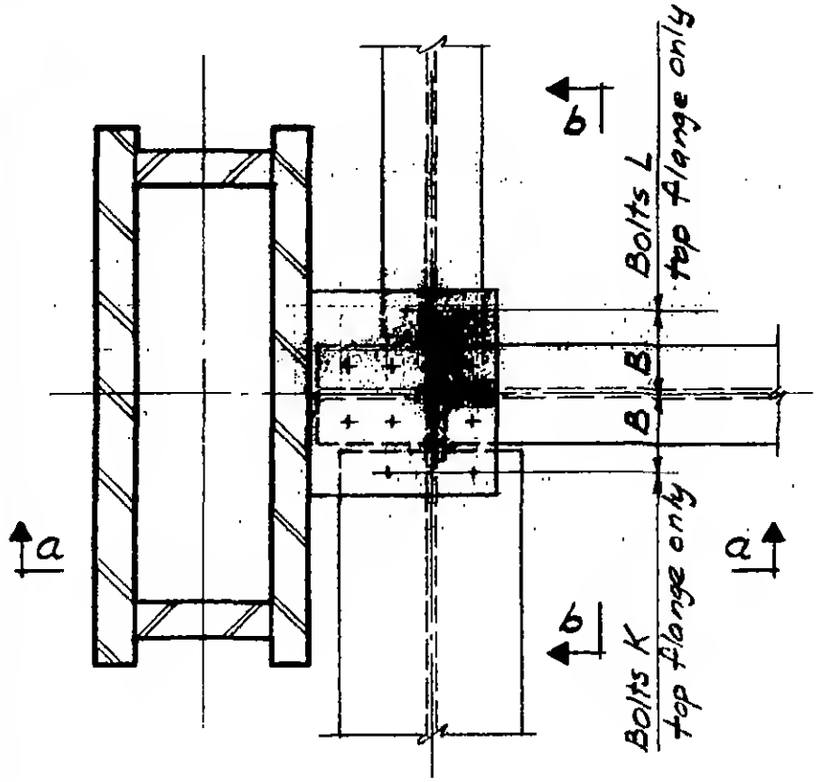

PLAN

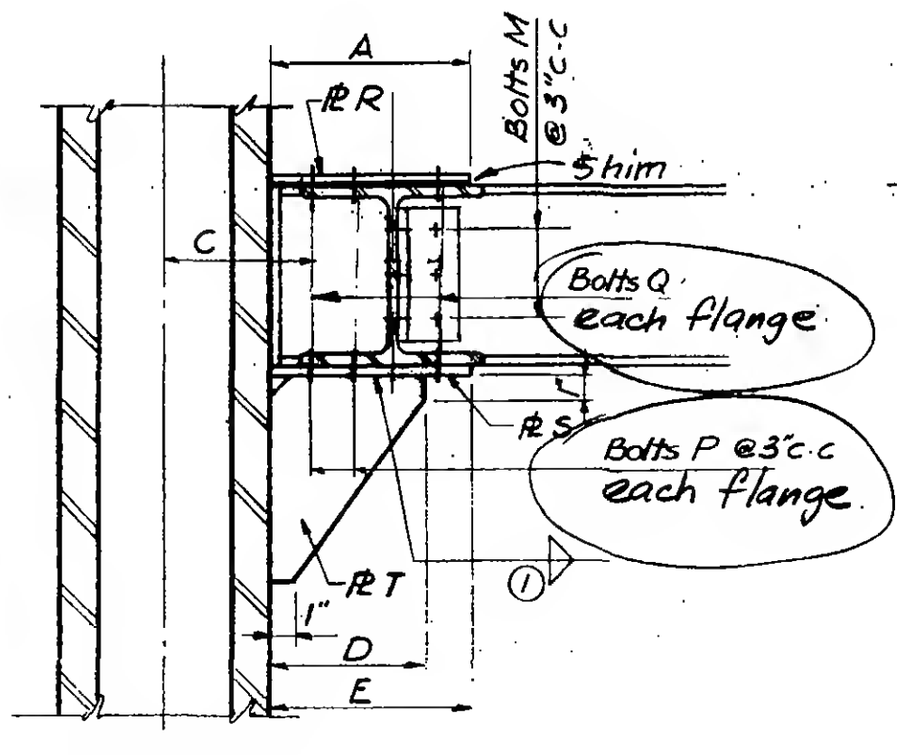

SECTION a-a

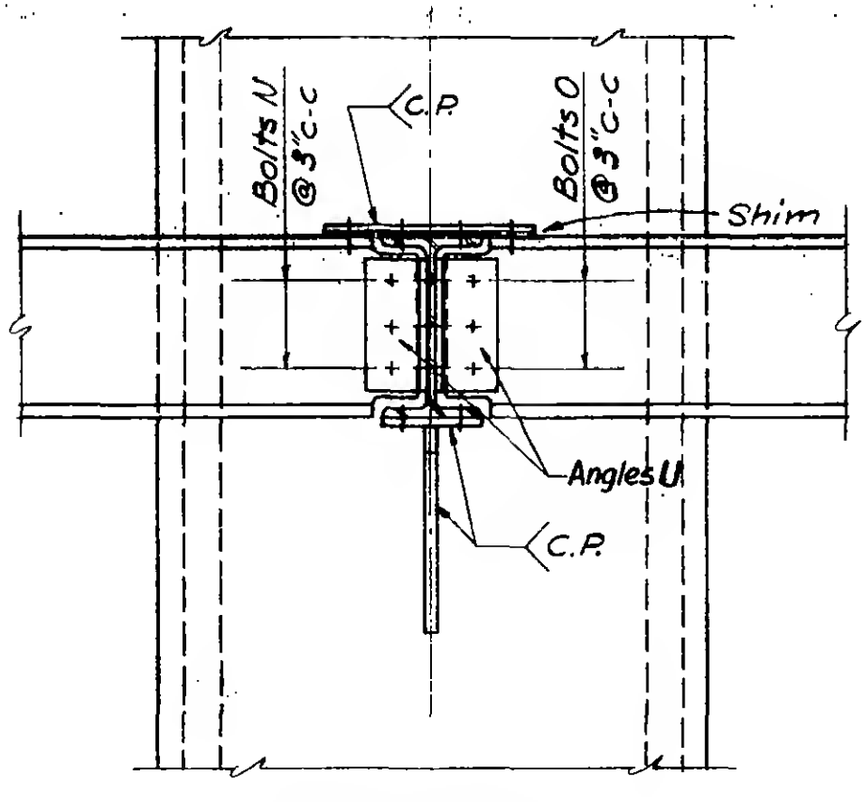

SECTION b-b

6-AB1-29

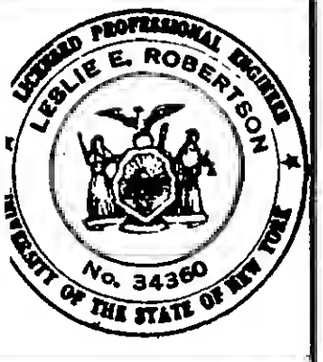

SKILLING - HELLE - CHRISTIANSEN - ROBERTSON Structural & Civil Engineers

PROJECT: THE WORLD TRADE CENTER | TITLE: SCHEDULE FOR DETAIL 222 A, B | DATE: 6-30-67

REVISIONS: 7-28-67

	222 A	222 B
PLATES		
R	13½" x 5/8"	14½" x 5/8"
S	6½" x 5/8"	7" x 5/8"
T	15" x ½"	15" x ½"
ANGLES		
U	4 x 4 x 7/16 x 0'-9"	4 x 4 x 3/8 x 0'-9"
DIMENSIONS		
A	1'-0¾"	0'-9¼"
B	0'-5¼"	0'-5½"
C	0'-10"	0'-10"
D	0'-10"	0'-7½"
E	0'-10"	0'-10"
BOLTS		
K	2 - 7/8" ϕ (A325)	2 - 1" ϕ (A325)
L	2 - 7/8" ϕ (A325)	2 - 1" ϕ (A325)
M	3 - 1" ϕ (A325)	3 - 7/8" ϕ (A325)
N	3 - 1" ϕ (A325)	3 - 7/8" ϕ (A325)
O	3 - 1" ϕ (A325)	3 - ¾" ϕ (A325)
P	4 - 1" ϕ (A325)	—
Q	—	4 - 1" ϕ (A325)
WELDS		
①	5/16	5/16

6-AB1-29.1

WORTHINGTON, SKILLING, HELLE & JACKSON — Civil & Structural Engineers

PROJECT: THE WORLD TRADE CENTER

TITLE: CONNECTION DETAIL 224A B & C

DATE: 6-30-67

REVISIONS

10-5-67

12-21-67

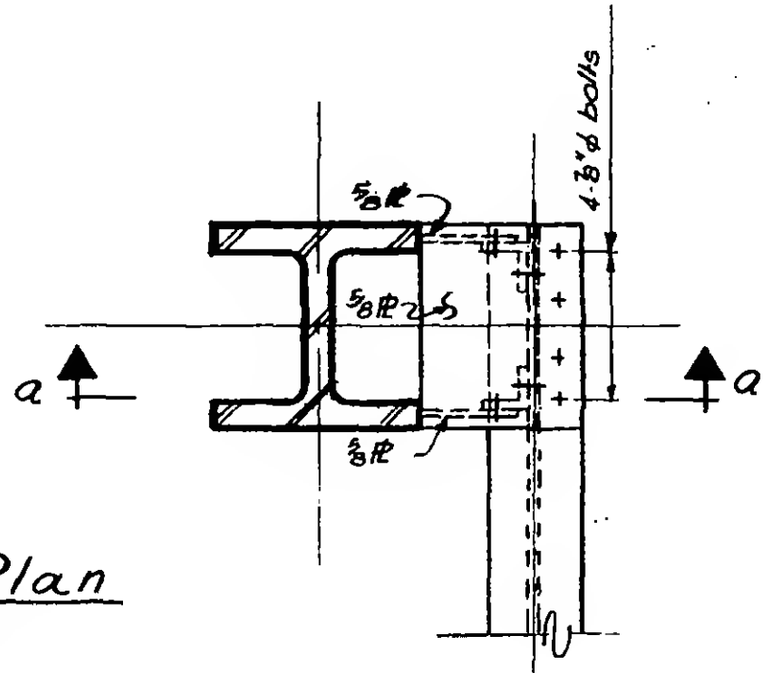

Plan

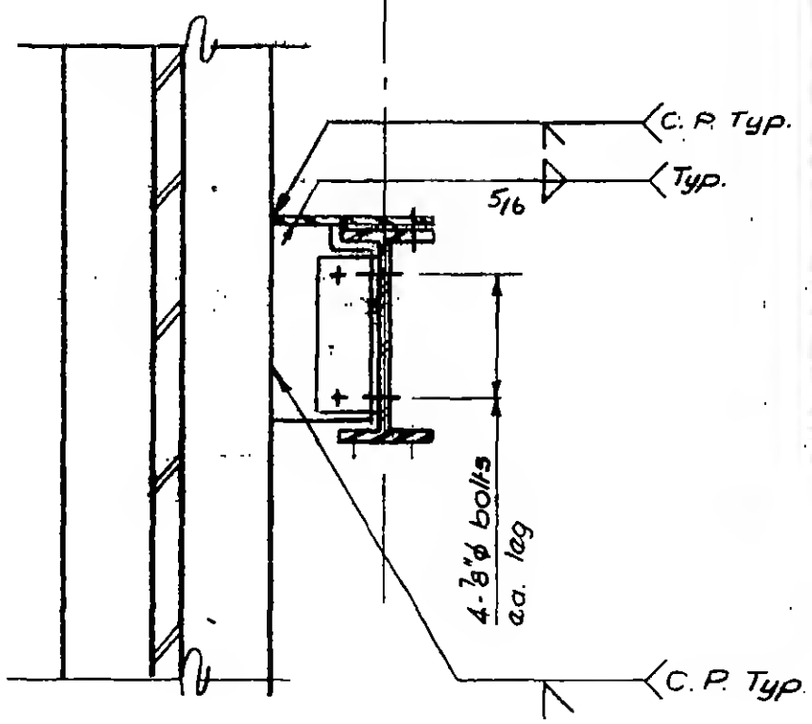

Section a-a

Detail 224 A

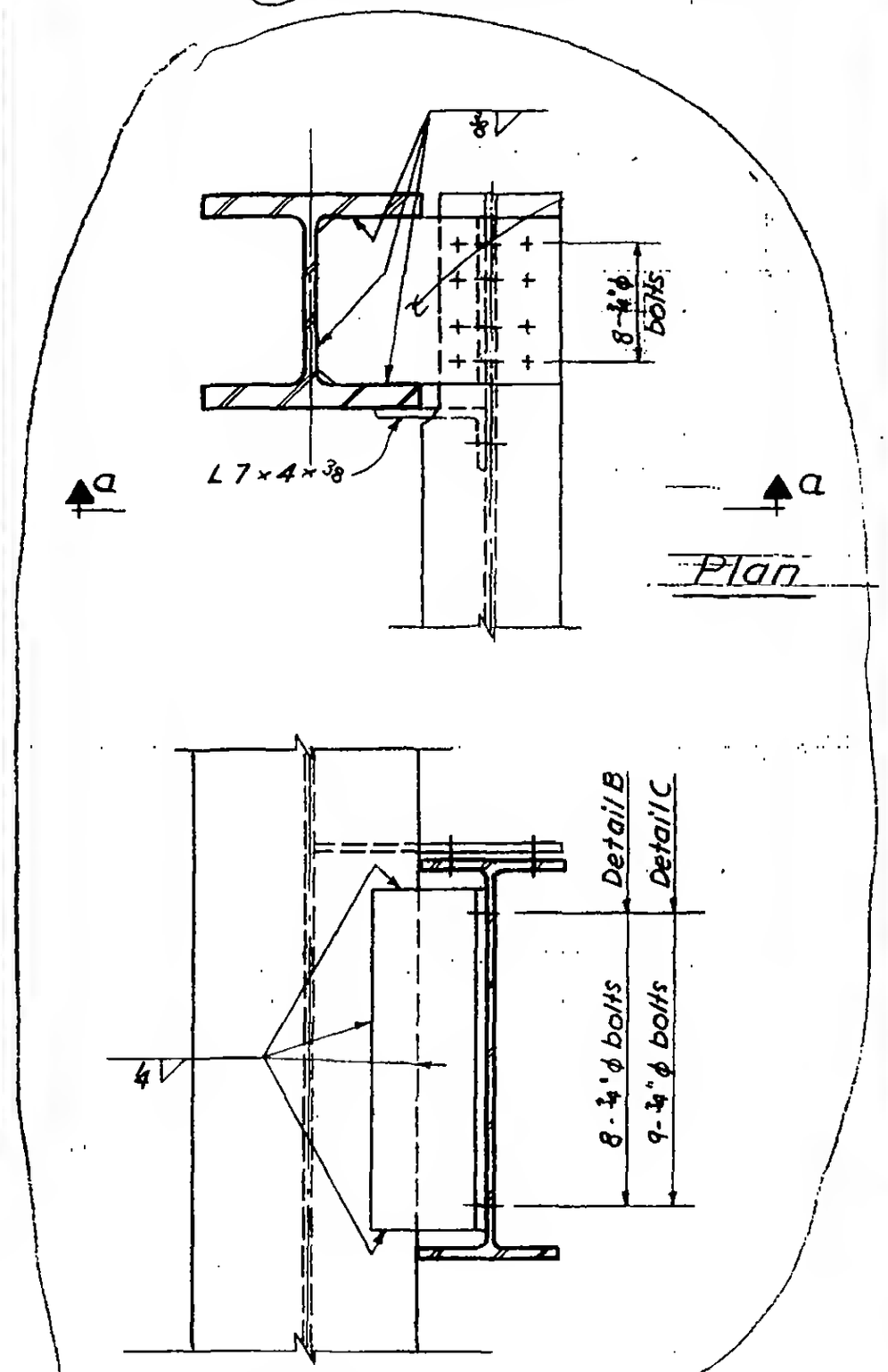

Plan

Section a-a

Detail 224 B & C

6-AB1-31

LICENSED PROFESSIONAL ENGINEER LESLIE E. ROBERTSON No. 34360 UNIVERSITY OF THE STATE OF NEW YORK

WORTHINGTON, SKILLING, HELLE & JACKSON — Civil & Structural Engineers

PROJECT: THE WORLD TRADE CENTER | TITLE: CONNECTION DETAIL 225 A | DATE: 7/14/67

REVISIONS
8-5-67
11-14-67

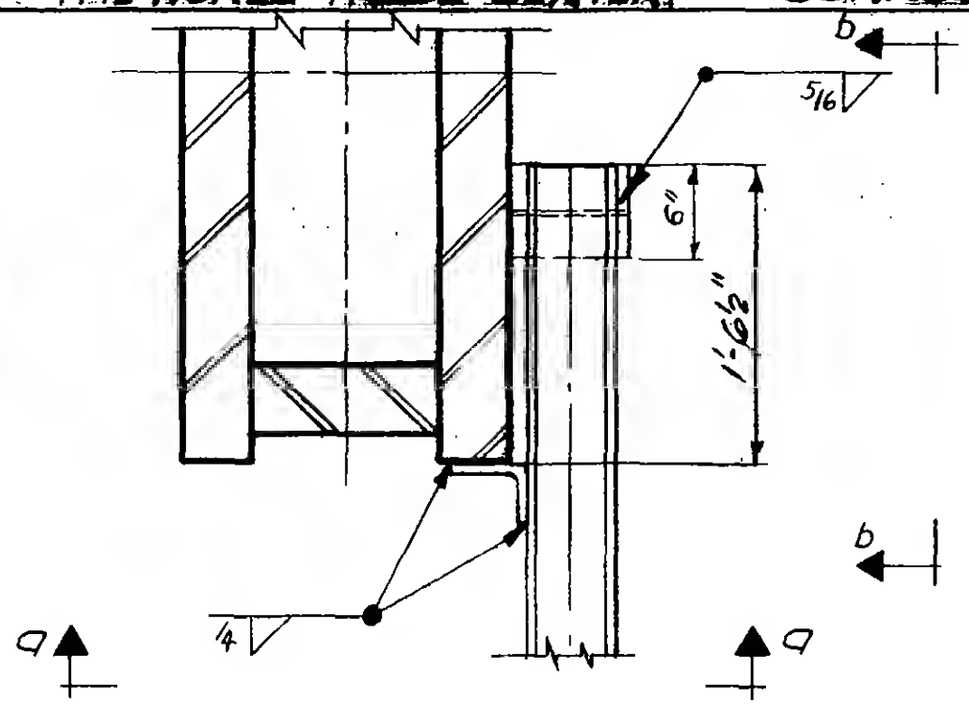

Plan

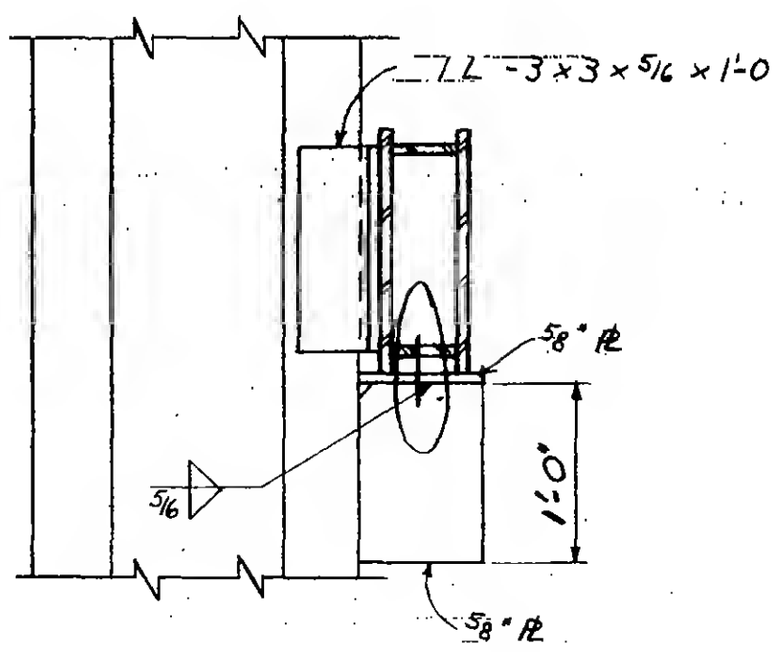

Section a-a

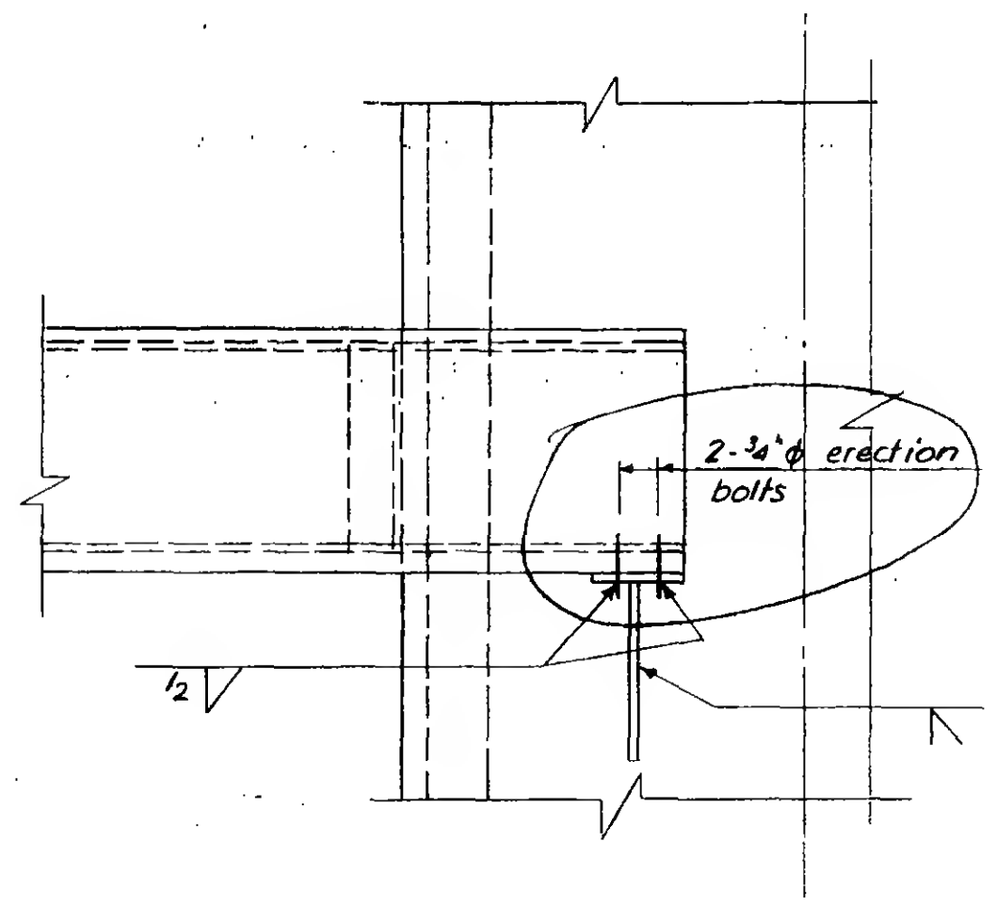

Section b-b

6-AB1-32

LICENSED PROFESSIONAL ENGINEER
LESLIE E. ROBERTSON
UNIVERSITY OF T... NEW YORK

SKILLING - HELLE - CHRISTIANSEN - ROBERTSON — Structural & Civil Engineers

PROJECT: THE WORLD TRADE CENTER | TITLE: CONNECTION DETAIL #226A | DATE: 6-30-67

REVISIONS
10-5-67
5-6-68

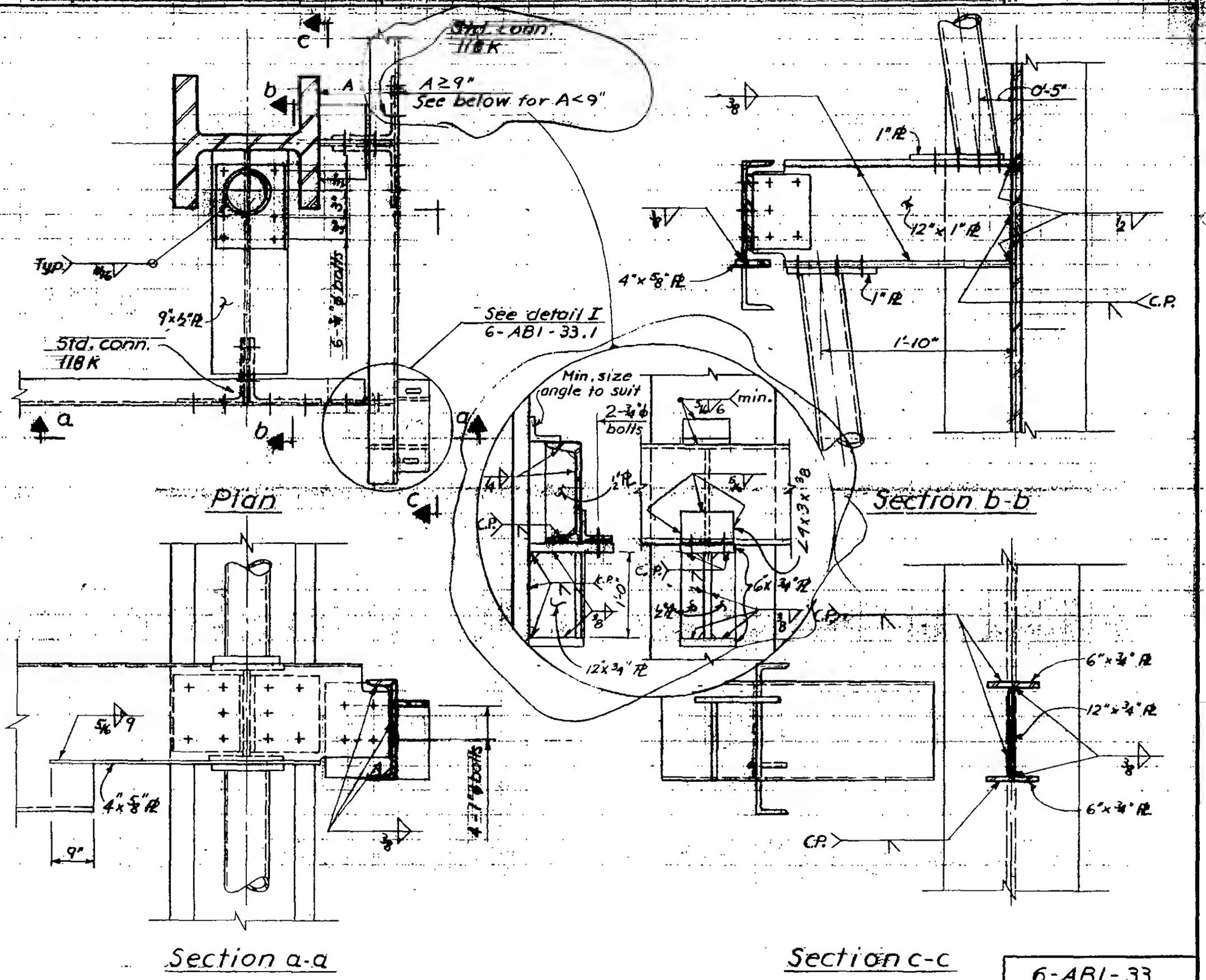

LICENSED PROFESSIONAL ENGINEER
LESLIE E. ROBERTSON
No. 34360
UNIVERSITY OF THE STATE OF NEW YORK

6-AB1-33

SKILLING - HELLE - CHRISTIANSEN - ROBERTSON Structural & Civil Engineers

PROJECT: THE WORLD TRADE CENTER | TITLE: CONNECTION DETAIL 226 A | DATE: 10-5-67

REVISIONS

11-21-67

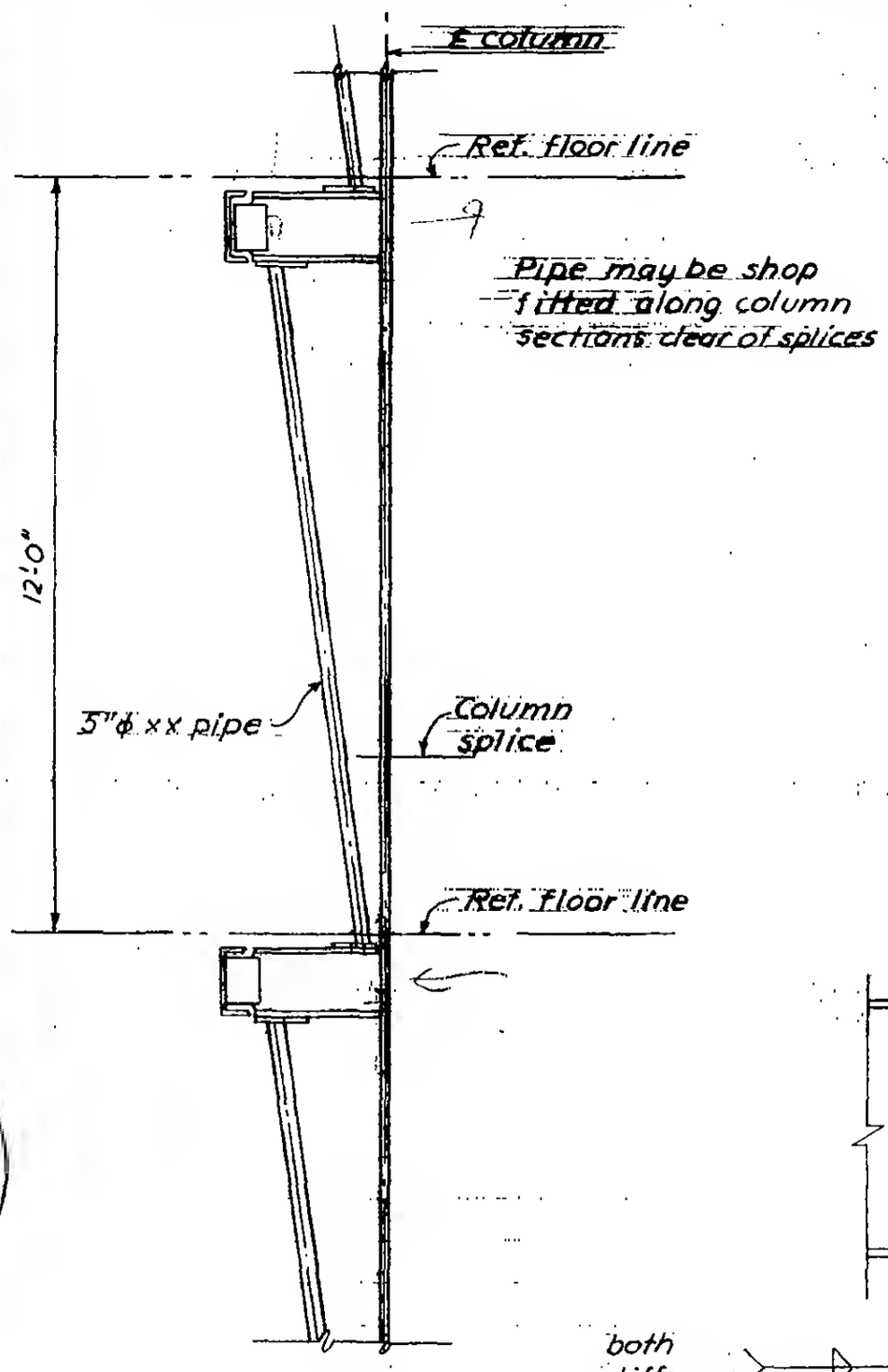

Elevation

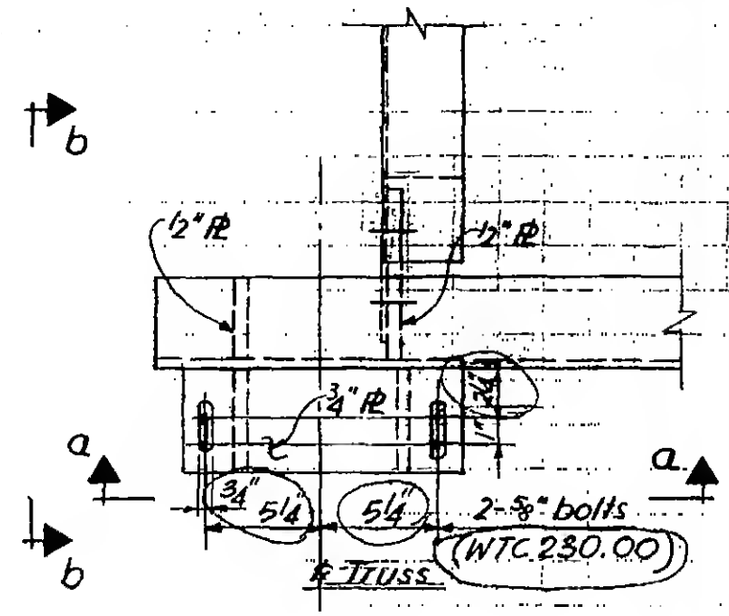

Plan
Detail I

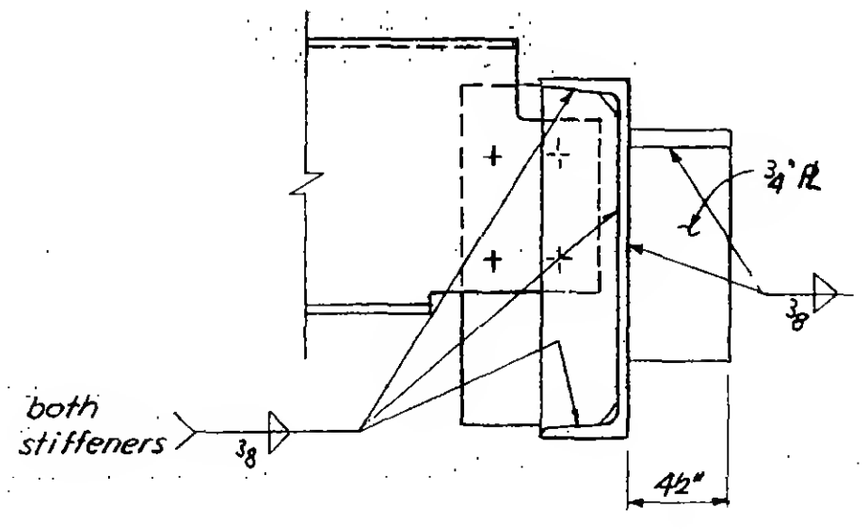

Section b-b

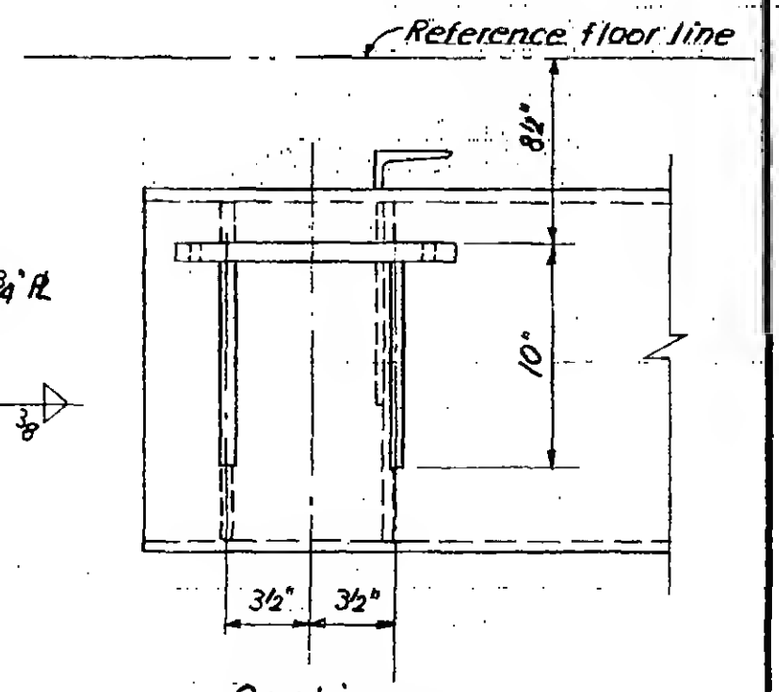

Section a-a

LICENSED PROFESSIONAL ENGINEER LESLIE E. ROBERTSON No. 34360 UNIVERSITY OF THE STATE OF NEW YORK

6-AB1-33.1

SKILLING - HELLE - CHRISTIANSEN - ROBERTSON — Structural & Civil Engineers

PROJECT: THE WORLD TRADE CENTER | TITLE: CONNECTION DETAIL 227 (A) | DATE: 6-5-67

REVISIONS: 10-5-67

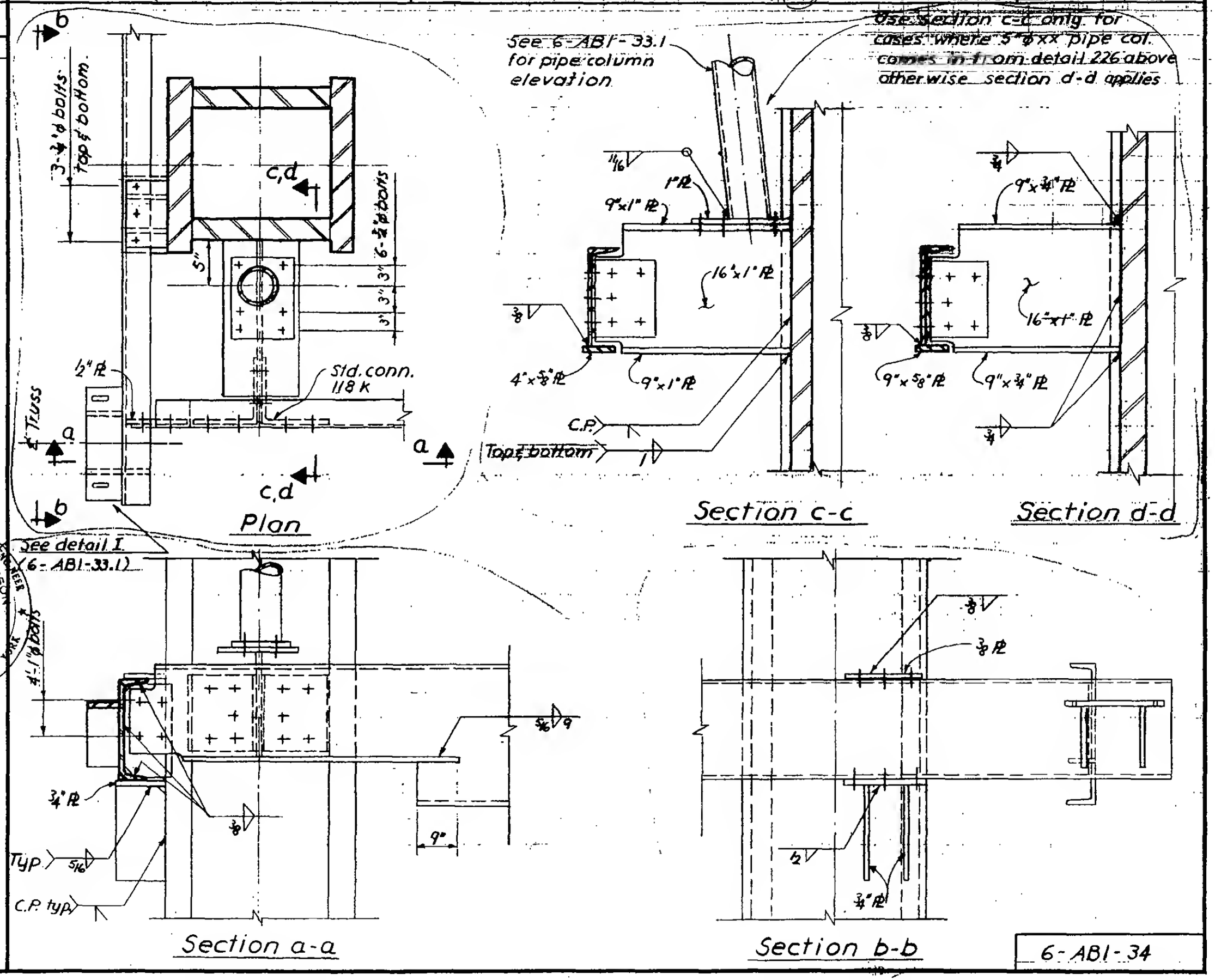

LICENSED PROFESSIONAL ENGINEER LESLIE E. ROBERTSON No. 34360 UNIVERSITY OF THE STATE OF NEW YORK

6-AB1-34

SKILLING - HELLE - CHRISTIANSEN - ROBERTSON — Structural & Civil Engineers

PROJECT: THE WORLD TRADE CENTER | TITLE: CONNECTION DETAIL 228 A & B | DATE: 8-30-67

REVISIONS
10-5-67
11-23-67

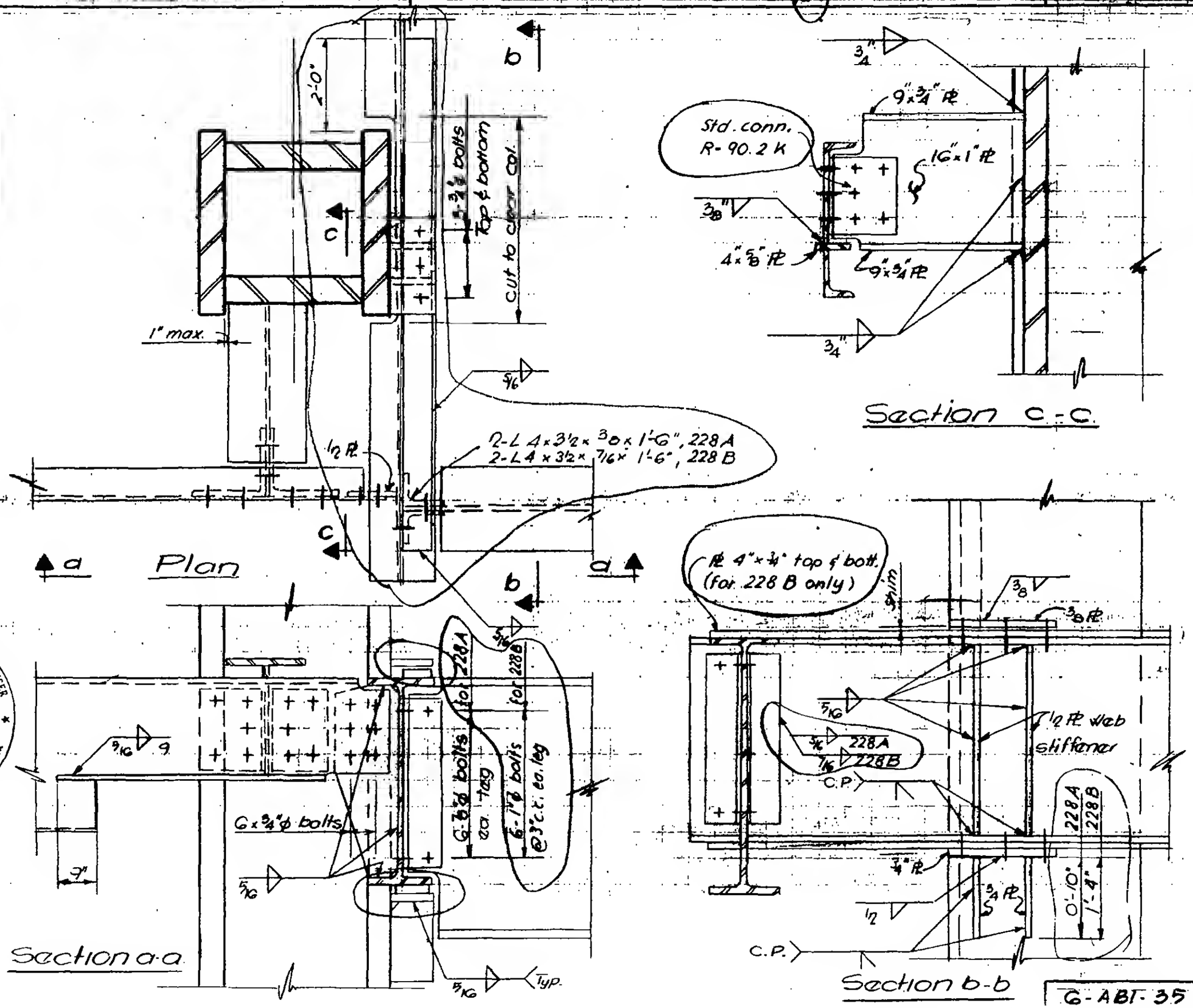

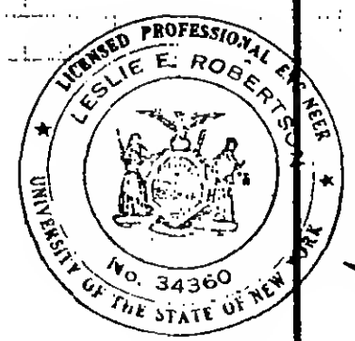

G-ABT-35

WORTHINGTON, SKILLING, HELLE & JACKSON — Civil & Structural Engineers

PROJECT: THE WORLD TRADE CENTER | TITLE: CONNECTION DETAIL (229 A) | DATE: 6-5-67

REVISIONS
9-15-67
11-10-67

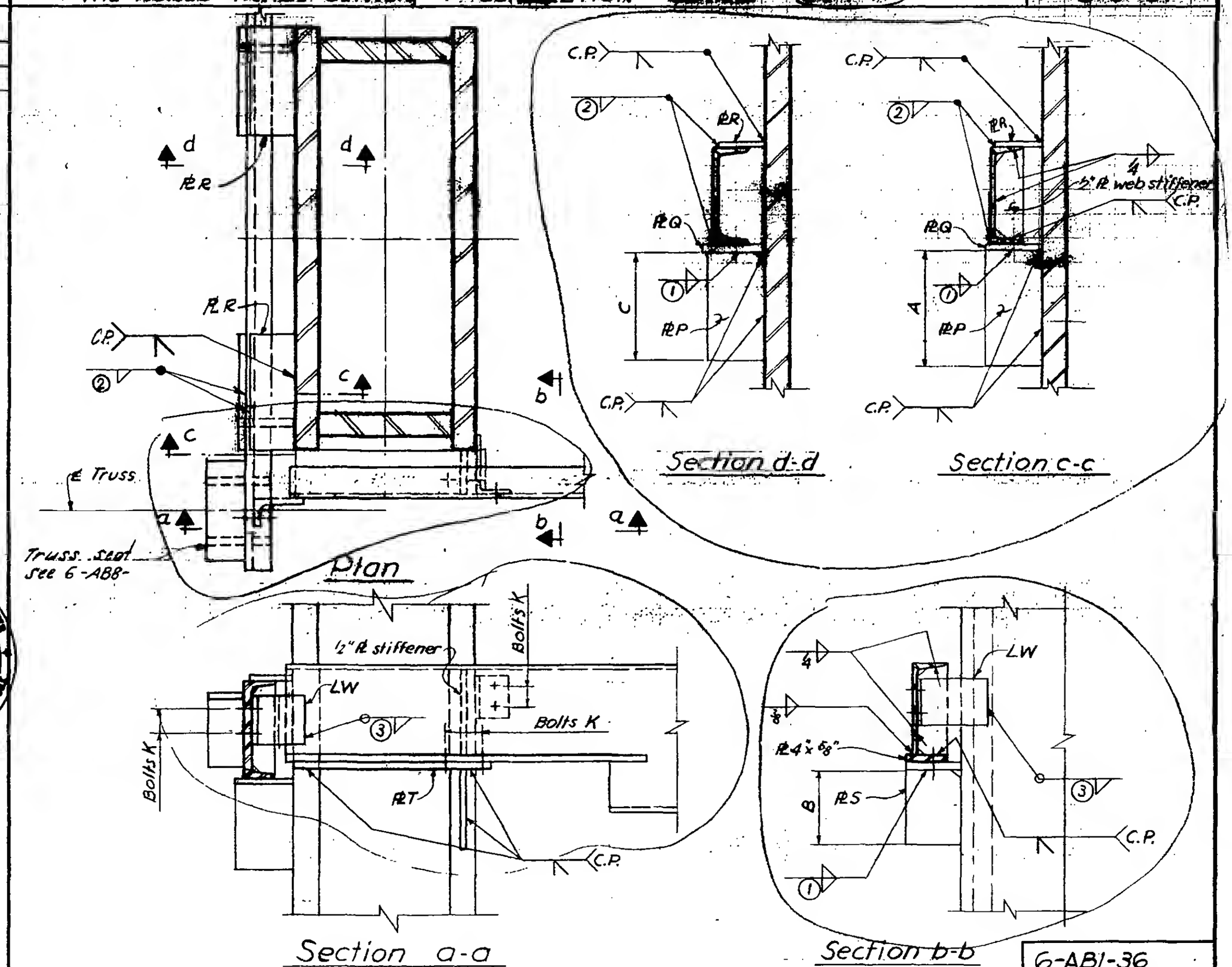

6-AB1-36

LICENSED PROFESSIONAL ENGINEER
LESLIE E. ROBERTSON
No. 24800
REGISTERED BY THE STATE OF NEW YORK

SKILLING - HELLE - CHRISTIANSEN - ROBERTSON Structural & Civil Engineers

PROJECT THE WORLD TRADE CENTER TITLE SCHEDULE FOR DETAIL 229 A & B DATE 9-15-67

REVISIONS

11-10-67

REF. DWGS.	6-AB1-36	6-AB1-36.2
	229A	229B
PLATES		
P	7"x1"	7"x1"
Q	7"x1"x1'-0"	7"x1"x1'-0"
R	4½"x¾"x1'-0"	4½"x¾x1'-0"
S	1"	—
T	1"	—
U	—	¾"
V	—	7"x¾"
DIMENSIONS		
A	1'-3"	1'-3"
B	1'-0"	1'-6"
C	0'-10"	0'-10"
BOLTS		
K	2-¾"ϕ	2-¾"ϕ
ANGLE		
W	7x4x⅜x0'-6"	7x4x⅜x0'-6"
WELDS		
1	5/16	5/16
2	½	½
3	5/16	5/16

5-AB1-36.1

SKILLING - HELLE - CHRISTIANSEN - ROBERTSON — Structural & Civil Engineers

PROJECT: THE WORLD TRADE CENTER | TITLE: CONNECTION DETAIL 229 B | DATE: 11-10-67

REVISIONS

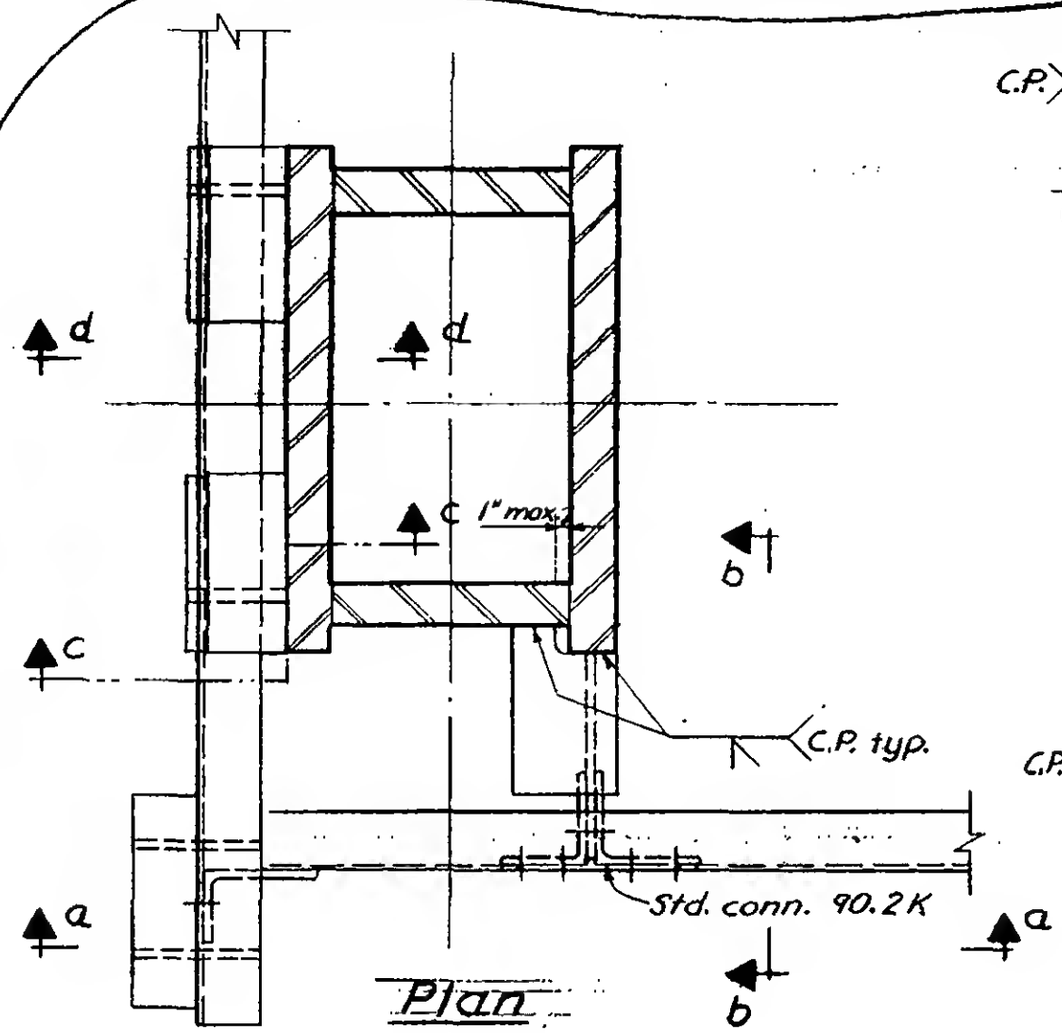

Plan

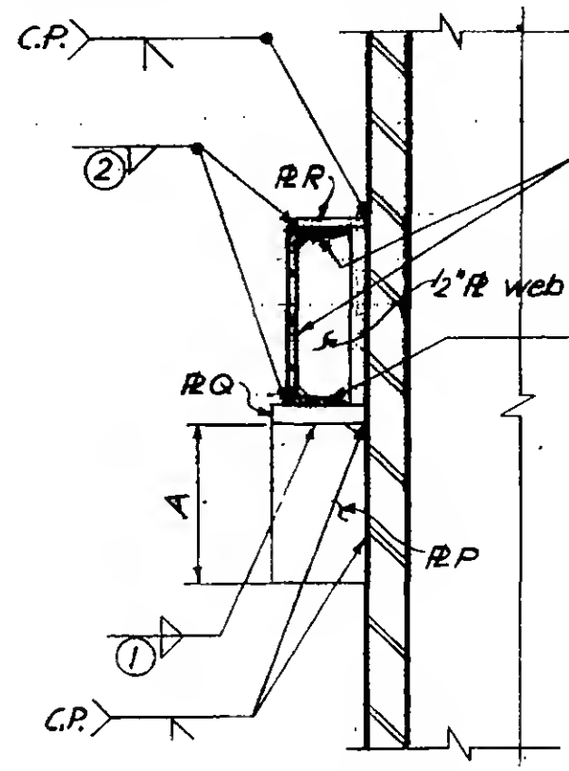

Section c-c

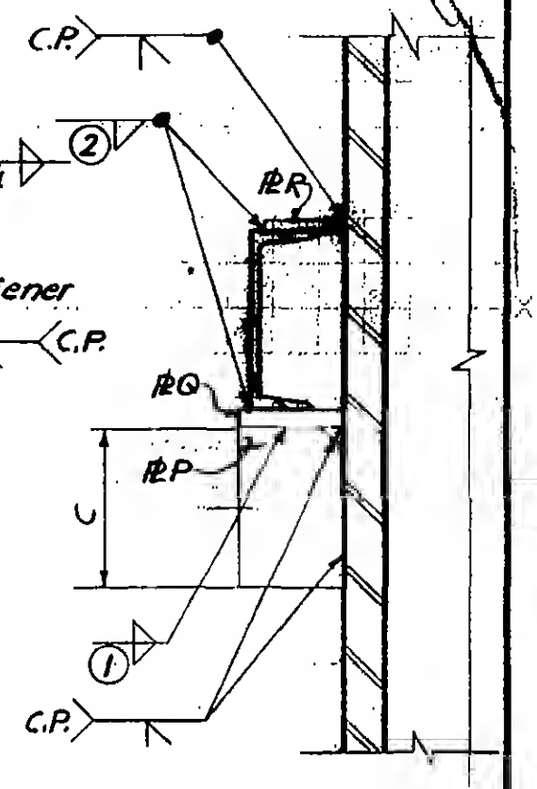

Section d-d

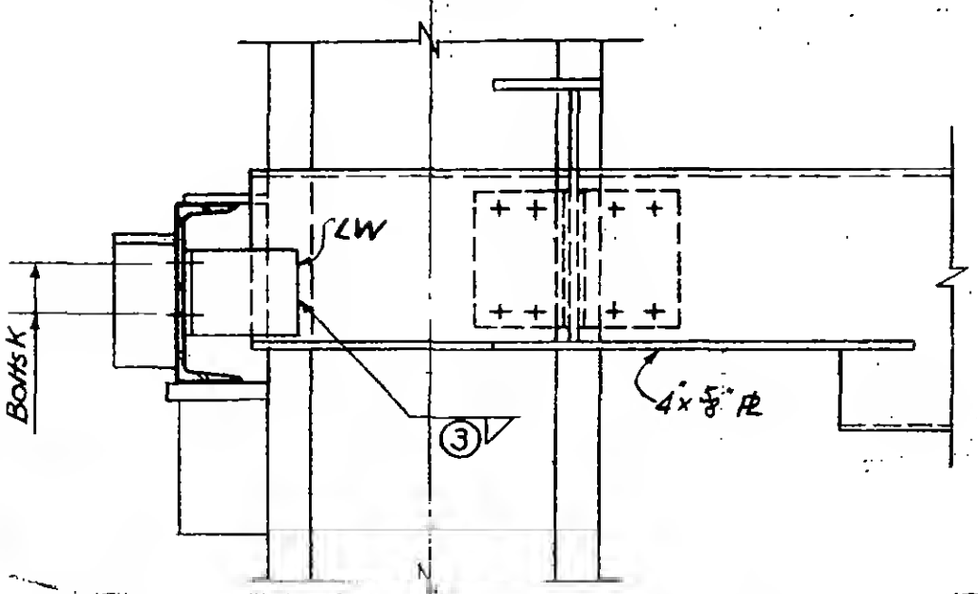

Section a-a

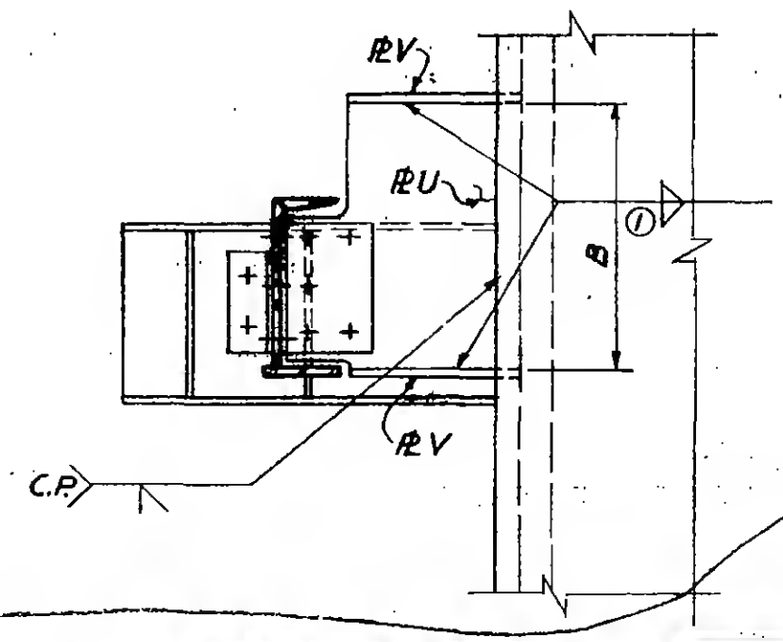

Section b-b

LICENSED PROFESSIONAL ENGINEER
LESLIE E. ROBERTSON
No. 34360
UNIVERSITY OF THE STATE OF NEW YORK

6-ABI-36.2

WORTHINGTON, SKILLING, HELLE & JACKSON — Civil & Structural Engineers

PROJECT: THE WORLD TRADE CENTER | TITLE: CONNECTION DETAIL 230 | DATE: 7/20/67

REVISIONS

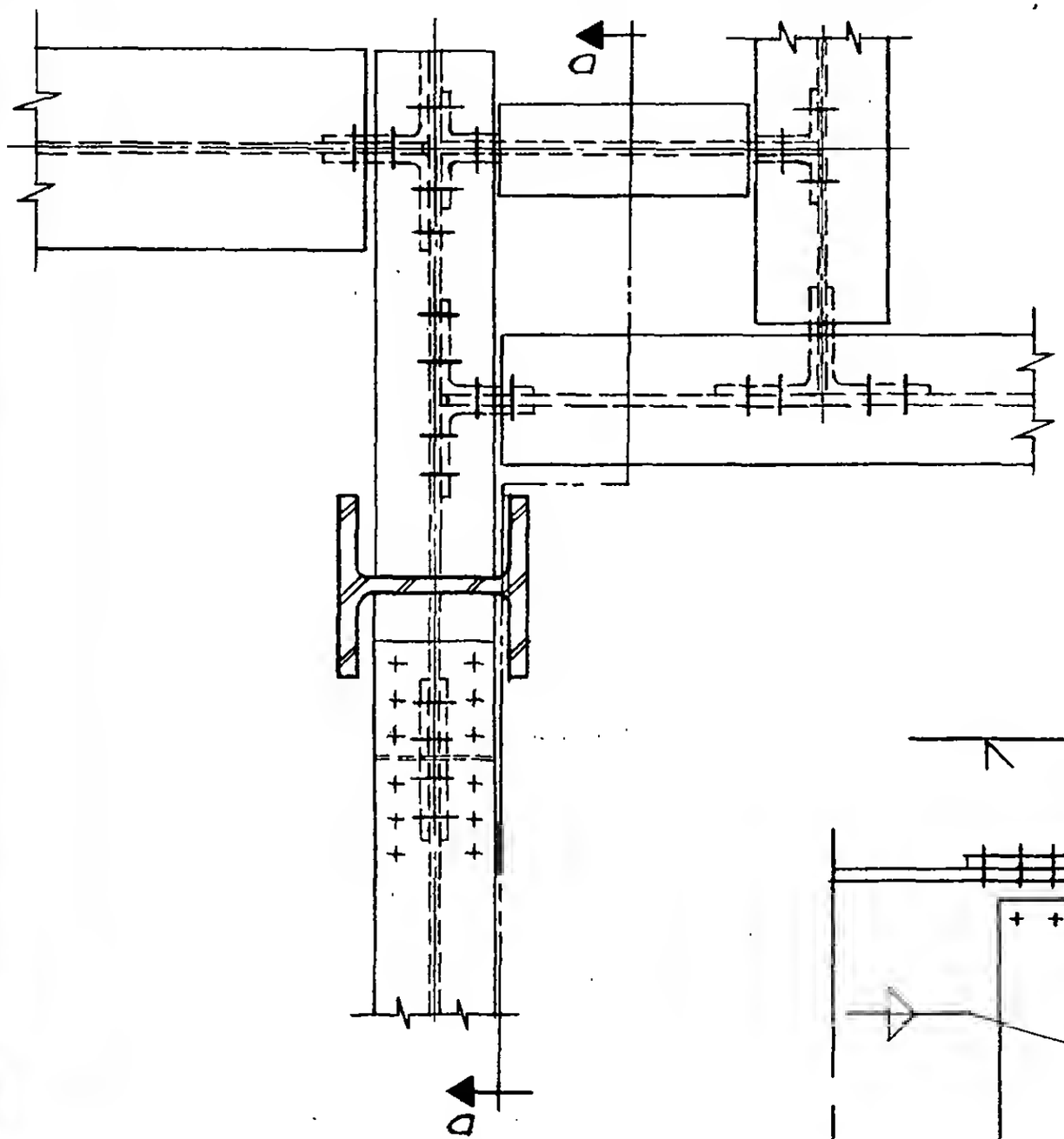

PLAN

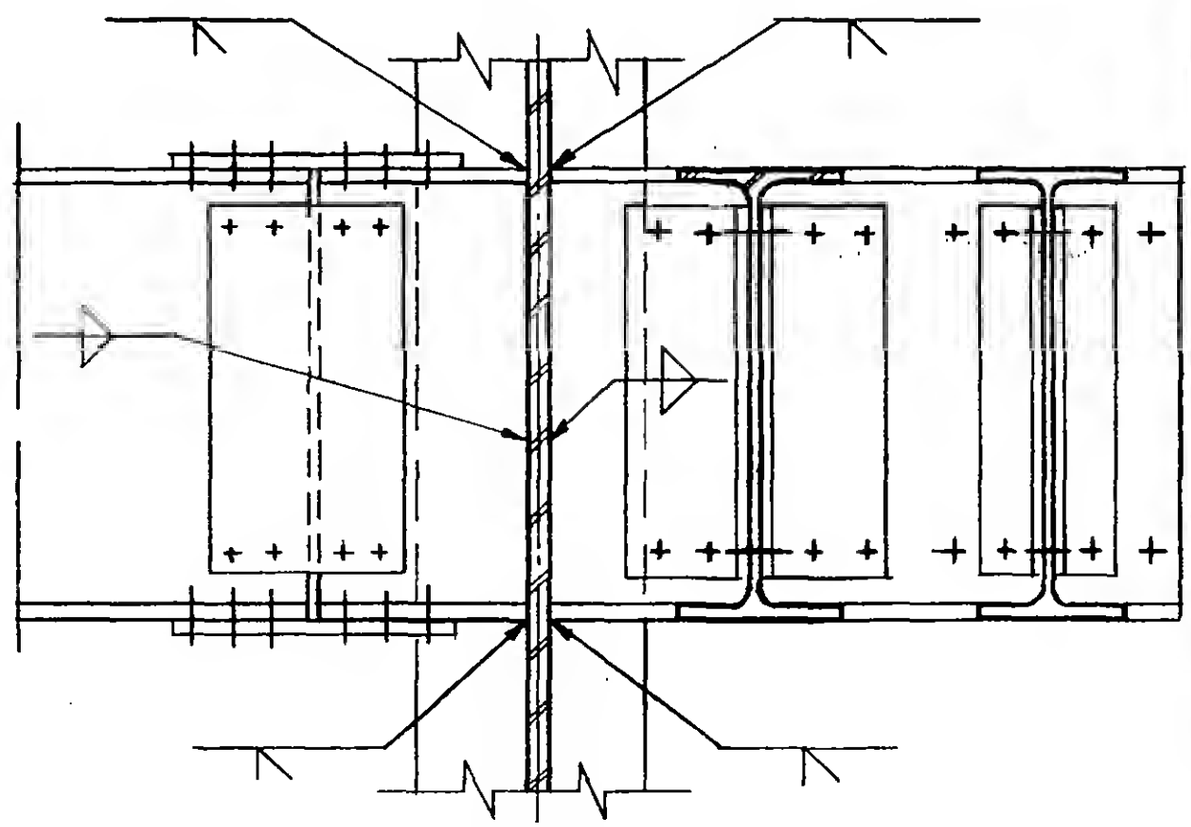

Section a-a

6-AB1-37

LICENSED PROFESSIONAL ENGINEER
LESLIE E. ROBERTSON
No. 34360
UNIVERSITY OF THE STATE OF NEW YORK

SKILLING - HELLE - CHRISTIANSEN - ROBERTSON Structural & Civil Engineers

PROJECT THE WORLD TRADE CENTER | TITLE CONNECTION DETAIL 231A | DATE 6-5-67

REVISIONS

11-23-67

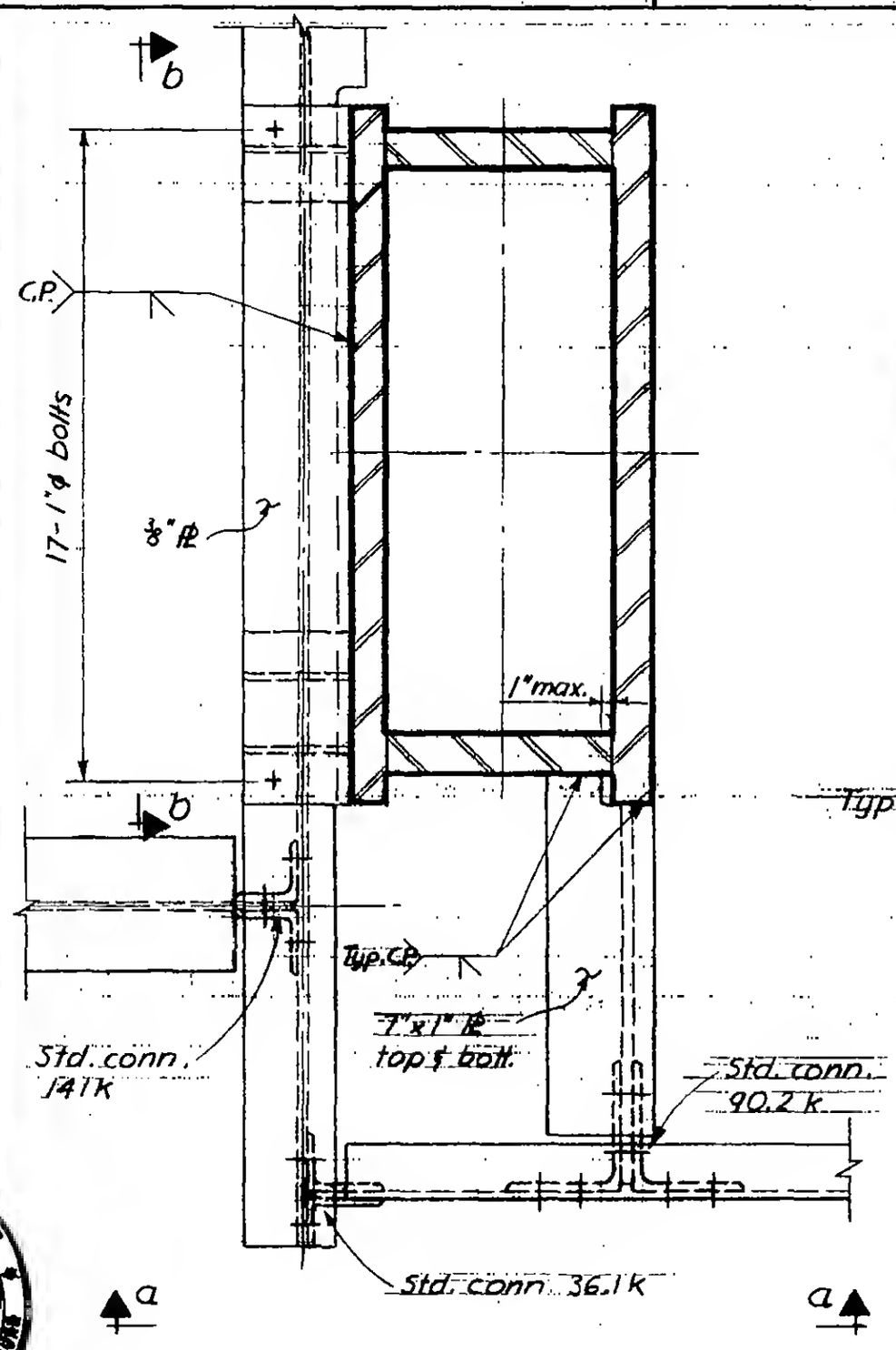

Plan

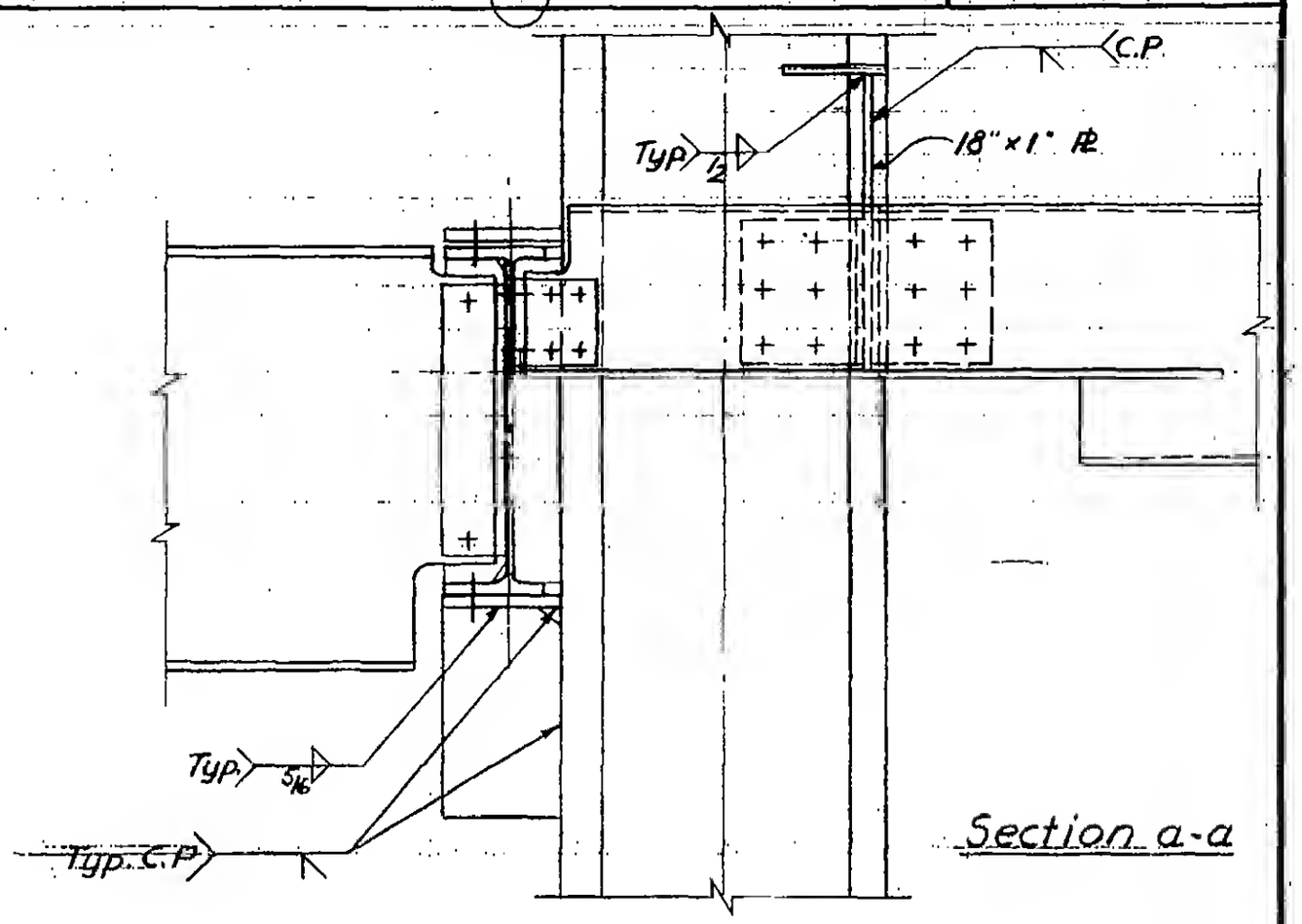

Section a-a

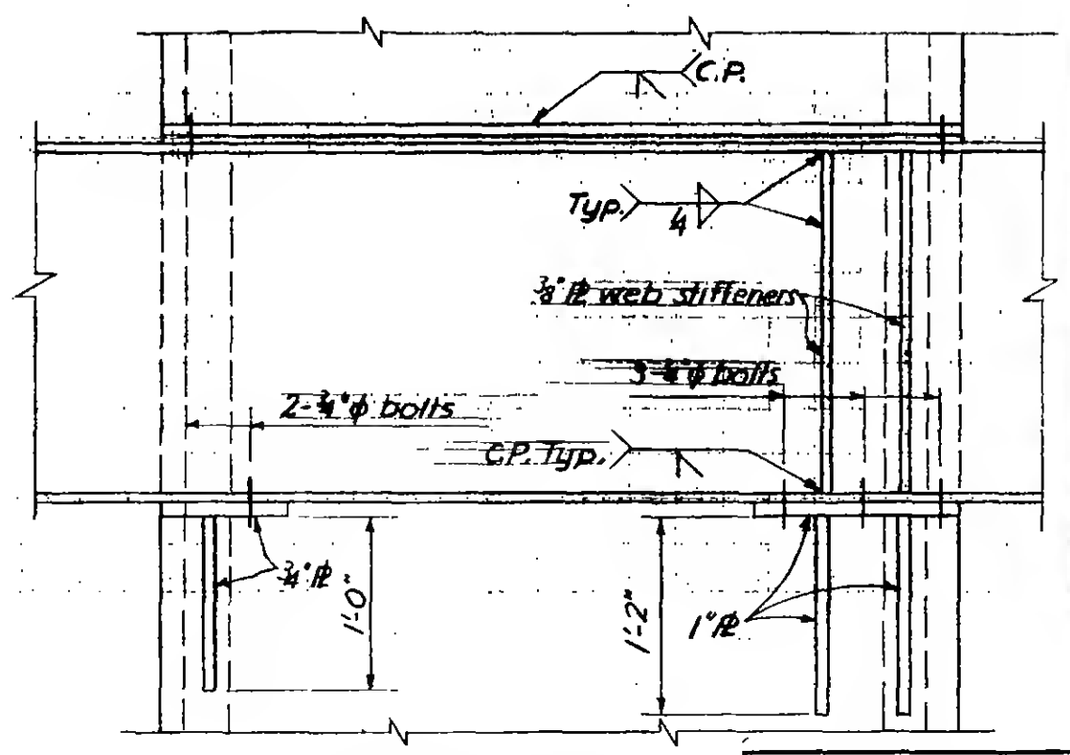

Section b-b

6-AB1-38

LICENSED PROFESSIONAL ENGINEER
LESLIE E. ROBERTSON
No. 34969
UNIVERSITY OF THE STATE OF NEW YORK

WORTHINGTON, SKILLING, HELLE & JACKSON — Civil & Structural Engineers

PROJECT: THE WORLD TRADE CENTER | TITLE: CONNECTION DETAIL 232 A, B & C | DATE: 5-1-67

REVISIONS
5-9-67
7-28-67
9-15-67
11-10-67
12-7-67

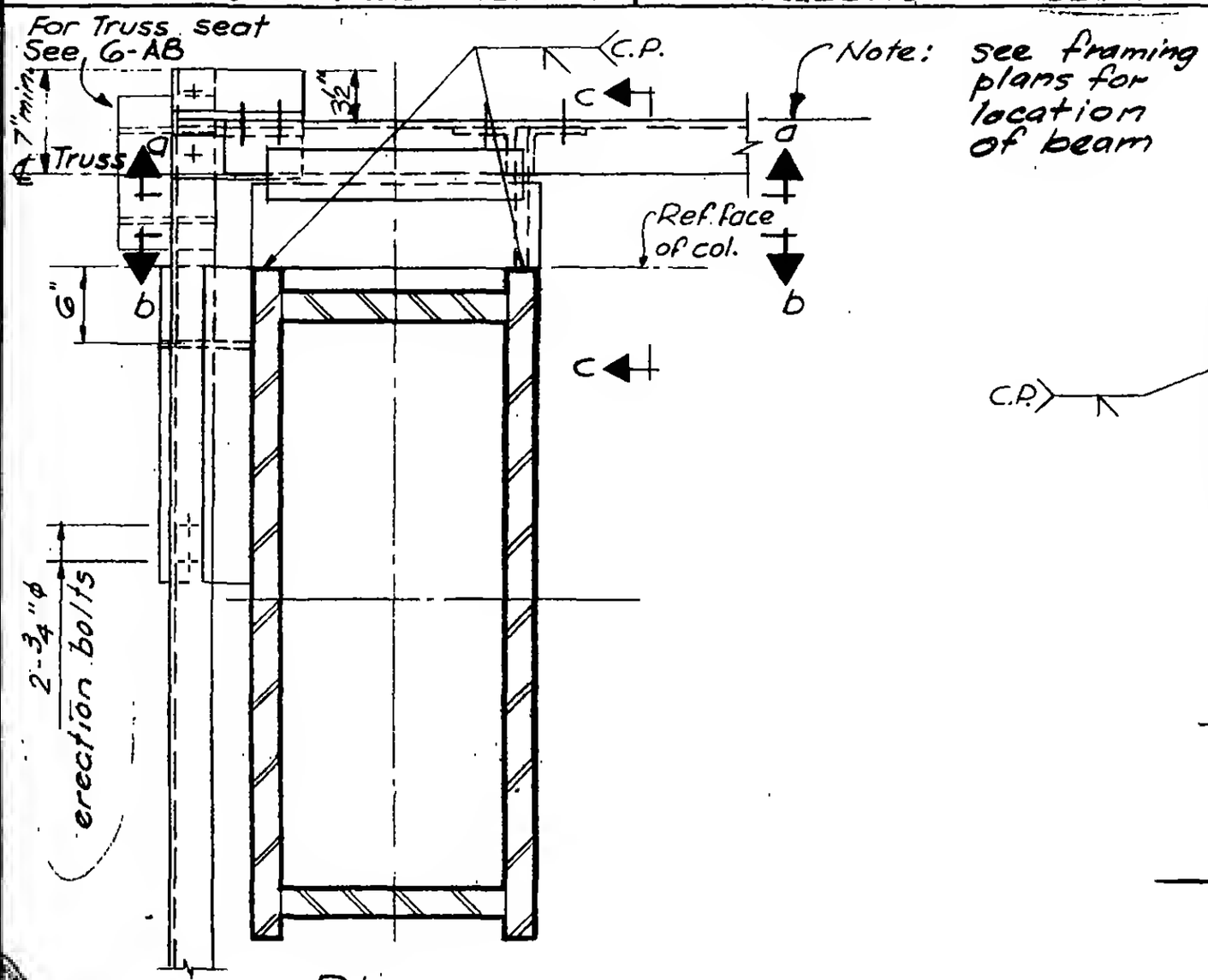

Plan

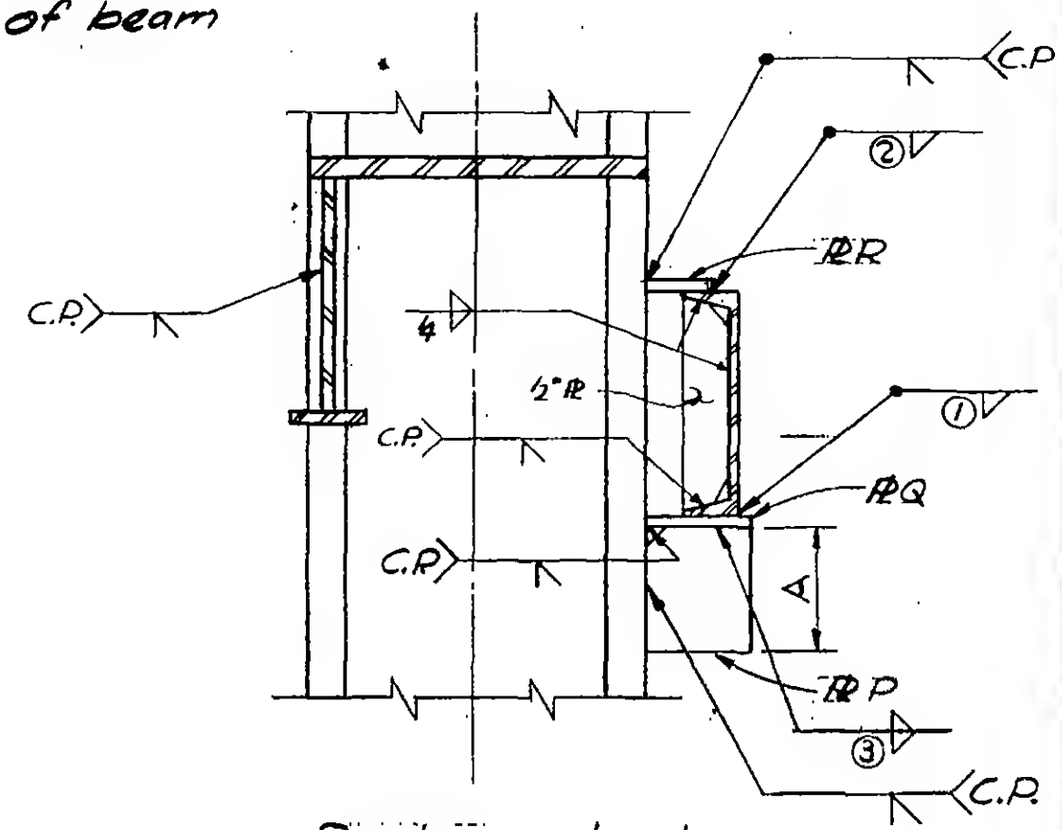

Section b-b

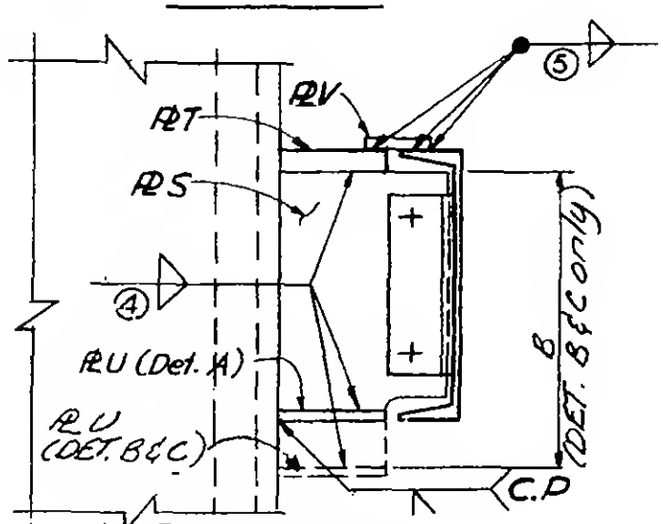

Section c-c

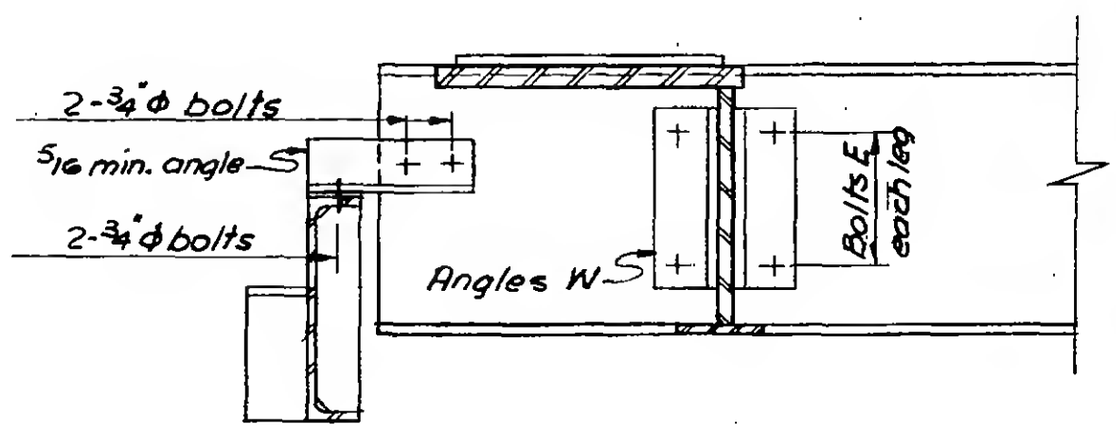

Section a-a

6-AB1-39

SKILLING - HELLE - CHRISTIANSEN - ROBERTSON Structural & Civil Engineers

PROJECT: THE WORLD TRADE CENTER

TITLE: SCHEDULE FOR DETAIL 232 A, B & C

DATE: 7-28-67

REVISIONS

9-15-67

	232A	232B	232C			
PLATES						
P	7x1	7x1	7x1			
Q	7x1x2'-1"	7x1x2'-1"	7x1x2'-1"			
R	4½x¾x2'-1"	4½x¾x2'-1"	4½x¾x2'-1"			
S	1½	1⅜	1⅜			
T	1½	1½	1¼			
U	5x¾	5x¾	5x¾			
V	4x½x1'-8"	4x¾x1'-8"	4x¾x1'-8"			
ANGLES						
W	4x3½x7/16	4x3½x⅜	4x3½x⅜			
DIMENSIONS						
A	1'-3"	1'-3"	1'-3"			
B	—	1'-6"	1'-8"			
BOLTS						
E	4-1"ϕ	4-⅞"ϕ	4-⅞"ϕ			
WELDS						
1	½	½	½			
2	½	½	½			
3	⅝	⅝	⅝			
4	½	½	½			
5	½	11/16	⅝			

6-AB 1-39.1

WORTHINGTON, SKILLING, HELLE & JACKSON — Civil & Structural Engineers

PROJECT: THE WORLD TRADE CENTER | TITLE: CONNECTION DETAIL 233 A | DATE: 5-1-67

REVISIONS
7-28-67
11-17-67
12-7-67

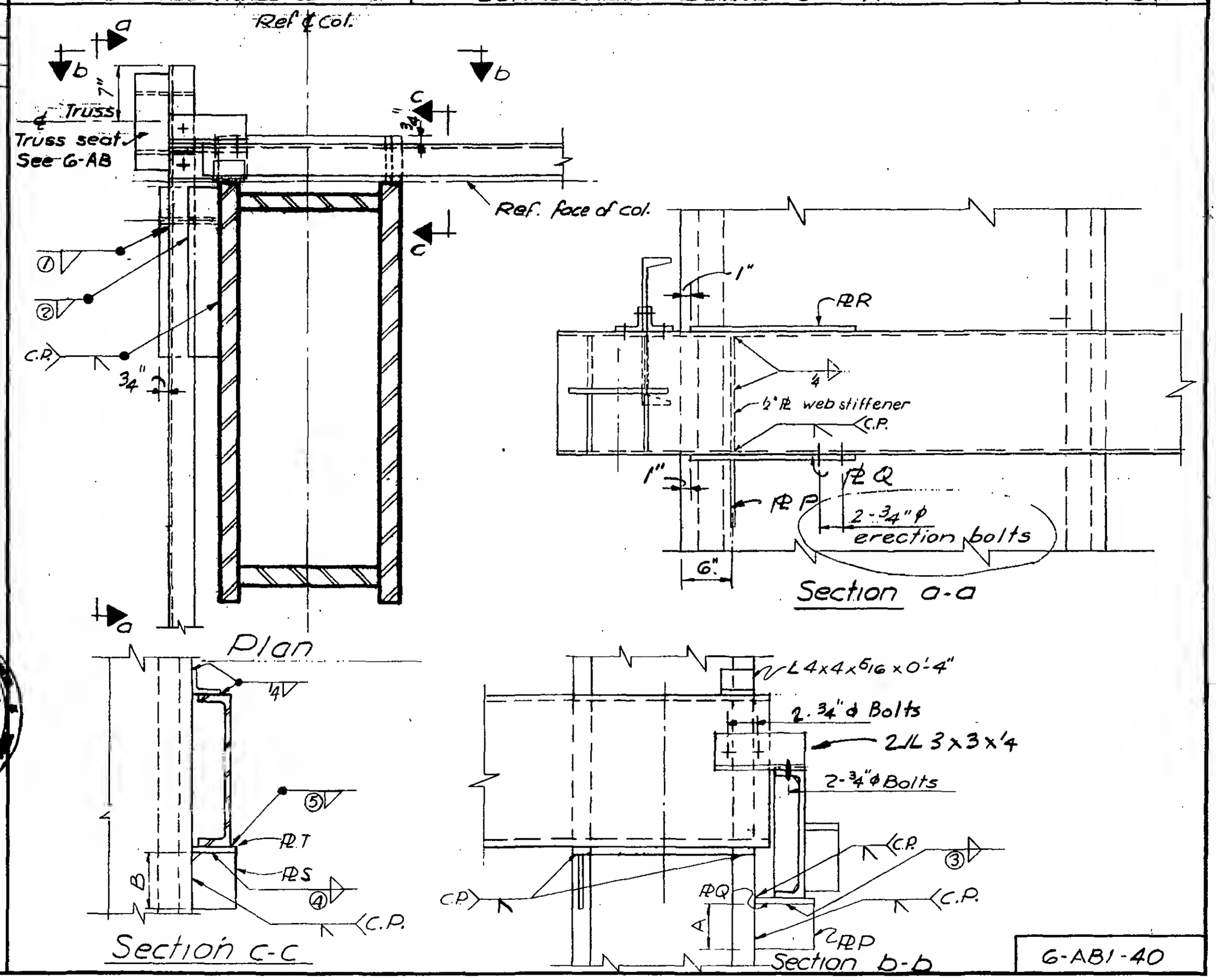

6-AB1-40

WORTHINGTON, SKILLING, HELLE & JACKSON — Civil & Structural Engineers

PROJECT: THE WORLD TRADE CENTER | TITLE: SCHEDULE FOR DETAIL 238 | DATE: 7/68

REVISIONS

	233A
PLATES	
P	1"
Q	1" x 2'-1"
R	4½" x ¾" x 2'-1"
S	1"
T	1"
DIMENSIONS	
A	1'-3"
B	0'-10"
WELDS	
①	½
②	½
③	⅝
④	7/16
⑤	⅜

LICENSED PROFESSIONAL ENGINEER
LESLIE E. ROBERTSON
No. 34360
STATE OF NEW YORK

6-AB1-40.1

WORTHINGTON, SKILLING, HELLE & JACKSON — Civil & Structural Engineers

PROJECT: THE WORLD TRADE CENTER | TITLE: CONNECTION DETAIL 234 A&F, J, K, L | DATE: 6-12-67

REVISIONS
6-19-67
7-28-67
2-9-68
9-18-68

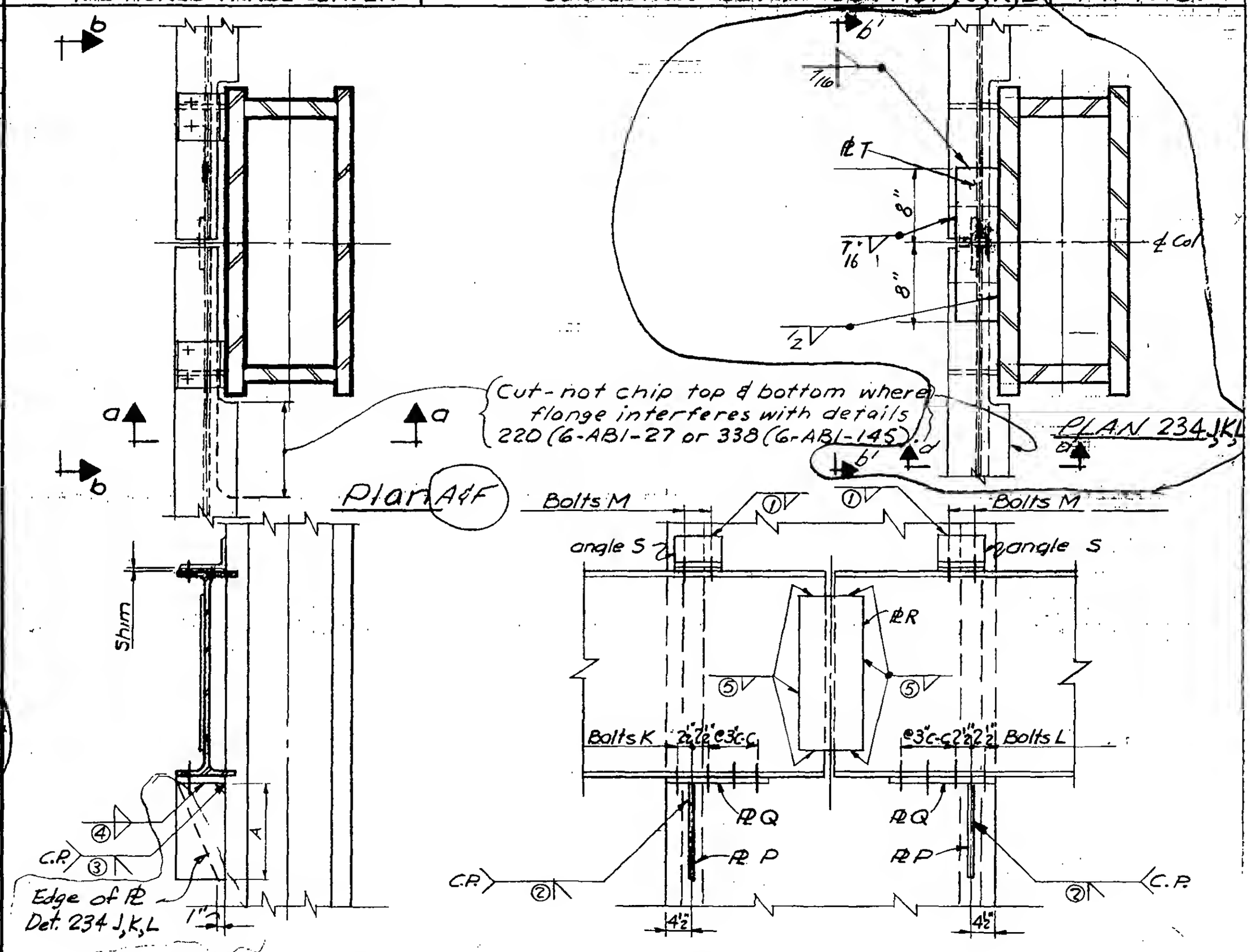

6-AB1-41

LICENSED PROFESSIONAL ENGINEER LESLIE E. ROBERTSON No. 34360 UNIVERSITY OF THE STATE OF NEW YORK

SKILLING - HELLE - CHRISTIANSEN - ROBERTSON Structural & Civil Engineers

PROJECT: THE WORLD TRADE CENTER | TITLE: SCHEDULE FOR DETAIL 234A, F & G, J, K, L | DATE: 7-28-67

REVISIONS
2-9-68
9-18-68

	234 A	234 F	234 G	234 J	234 K	234 L
PLATES						
P	7/8"	7/8"	7/8"	7/8"	1"	1"
Q	1"	1"	1"	1"	1 1/4"	1 1/4"
R	4" x 3/8" x 1'-0"	4" x 3/8" x 1'-0"	4" x 3/8" x 1'-0"	4" x 3/8" x 1'-0"	4" x 3/8" x 1'-0"	4" x 3/8" x 1'-0"
T	—	—	—	1/2"	1/2"	1/2"
DIMENSIONS						
A	0'-10"	1'-1"	1'-2"	1'-1"		
ANGLES						
S	6 x 4 x 5/16	6 x 4 x 5/16	—	—		
BOLTS						
K	4 - 1 1/8" ϕ	4 - 1 1/8" ϕ	4 - 1 1/8" ϕ	4 - 1 1/8" ϕ	4 - 1 1/8" ϕ	6 - 1 1/8" ϕ (Brg.)
L	4 - 1 1/8" ϕ	4 - 1 1/8" ϕ	4 - 1 1/8" ϕ	4 - 1 1/8" ϕ	4 - 1 1/8" ϕ	6 - 1 1/8" ϕ (Brg.)
M	2 - 3/4" ϕ	2 - 3/4" ϕ	—	2 - 3/4" ϕ		
WELDS						
1	1/4	1/4	—	—	—	—
2	C.P.	C.P.	C.P.	C.P.	C.P.	C.P.
3	C.P.	C.P.	C.P.	C.P.	C.P.	C.P.
4	3/8	3/8	3/8	3/8	1/2	1/2
5	5/16	5/16	5/16	5/16	5/16	5/16

LICENSED PROFESSIONAL ENGINEER LESLIE E. ROBERTSON No. 34360 STATE OF NEW YORK

6-ABI-41.1

SKILLING - HELLE - CHRISTIANSEN - ROBERTSON Structural & Civil Engineers

PROJECT: THE WORLD TRADE CENTER | TITLE: CONNECTION DETAIL 234 B & E | DATE: 8-14-67

REVISIONS
2-9-68

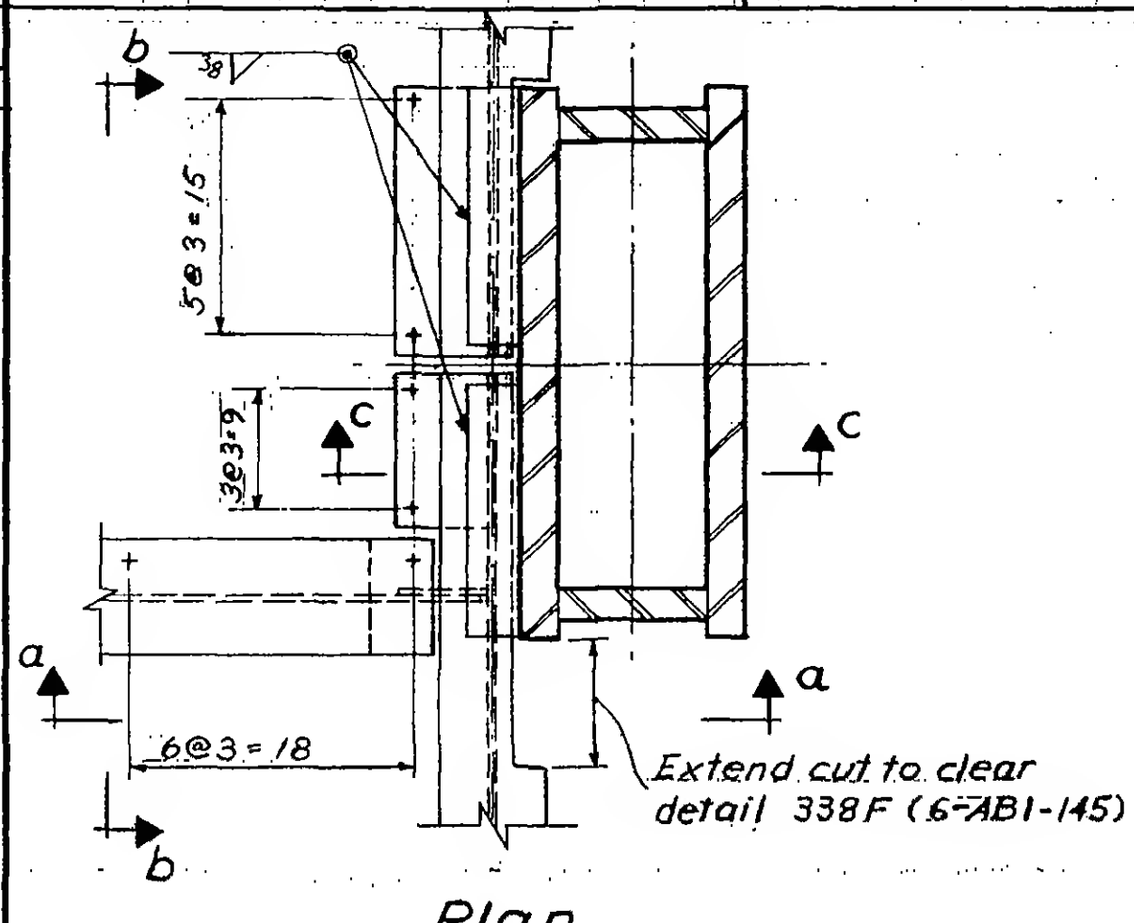

Plan

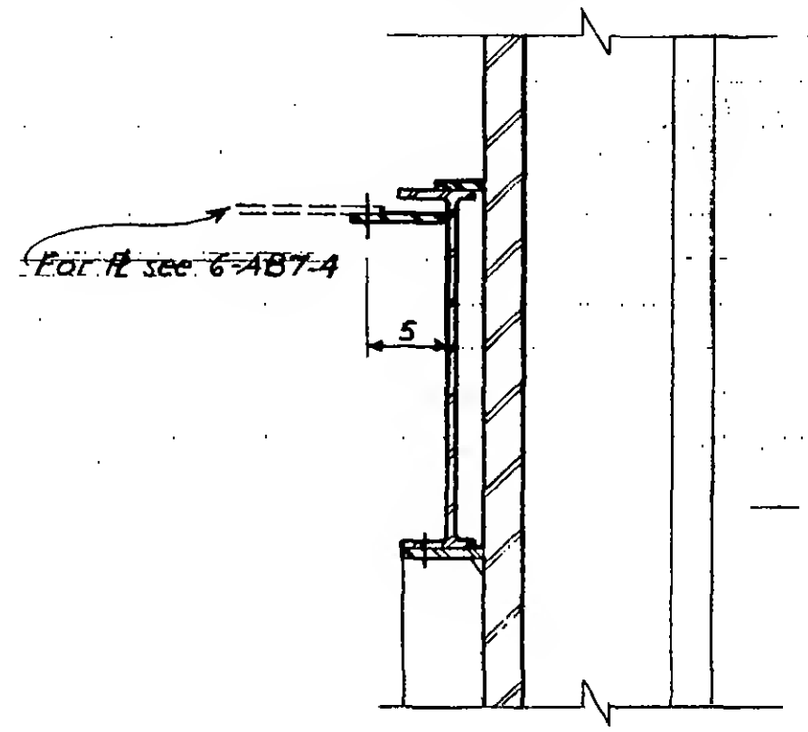

Section c-c

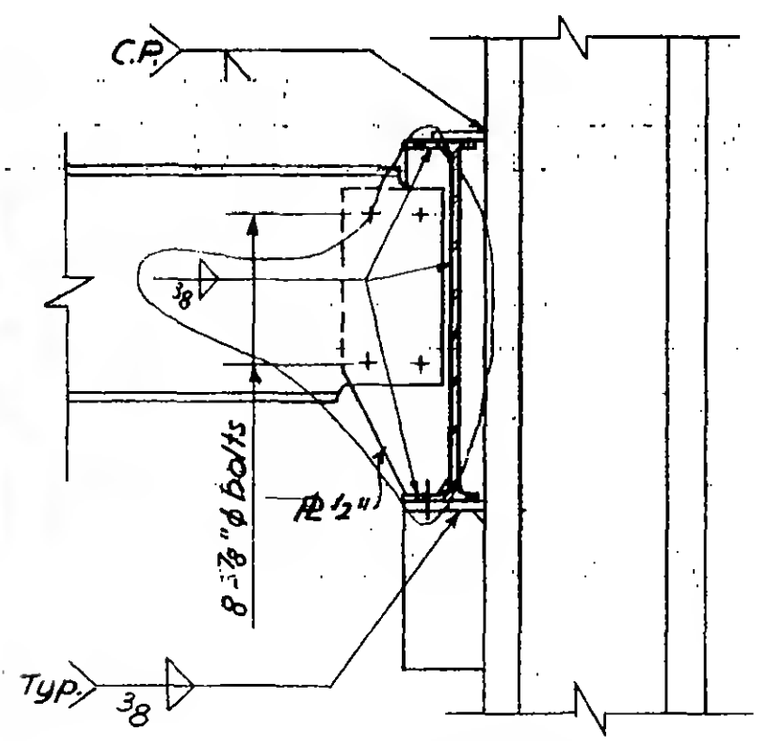

Section a-a

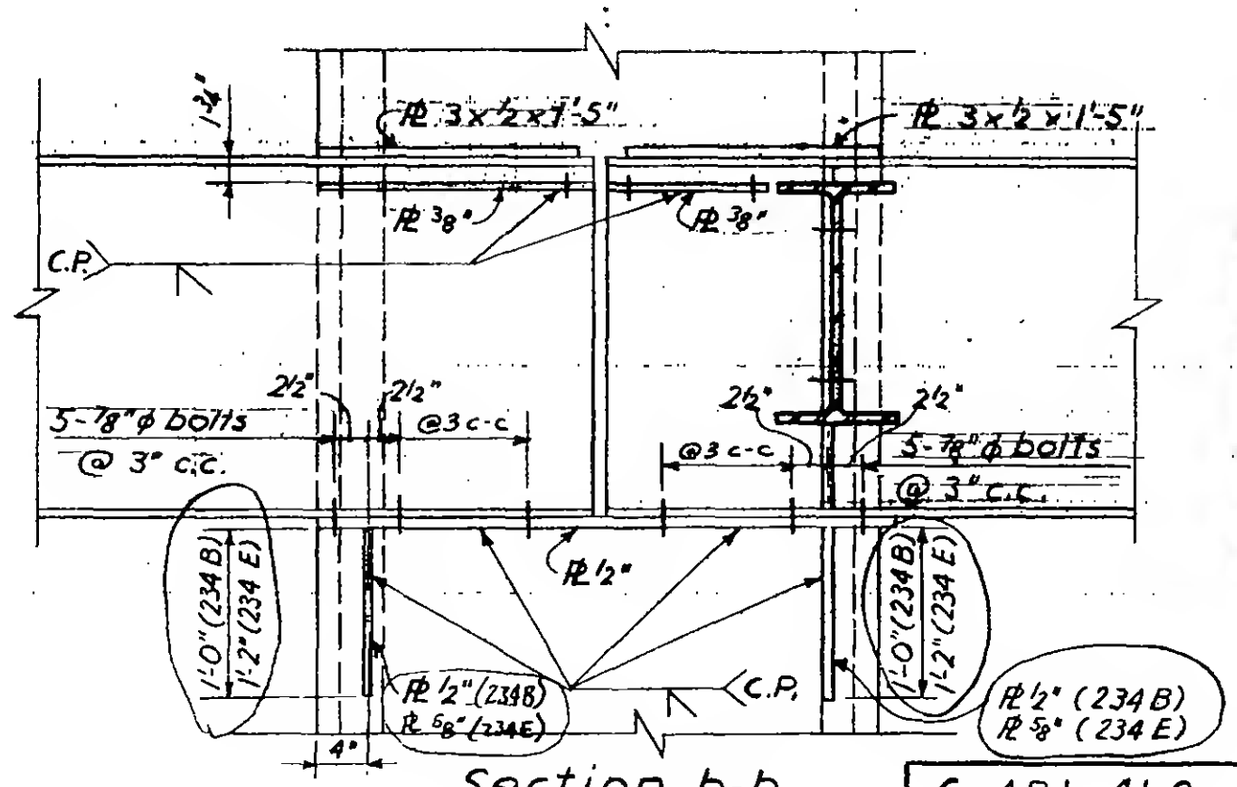

Section b-b

6-AB1-41.2

LICENSED PROFESSIONAL ENGINEER
LESLIE E. ROBERTSON
No. 34360
UNIVERSITY OF THE STATE OF NEW YORK

SKILLING - HELLE - CHRISTIANSEN - ROBERTSON Structural & Civil Engineers

PROJECT THE WORLD TRADE CENTER | TITLE CONNECTION DETAIL 234 C, D | DATE 2-8-68

REVISIONS

3-11-68

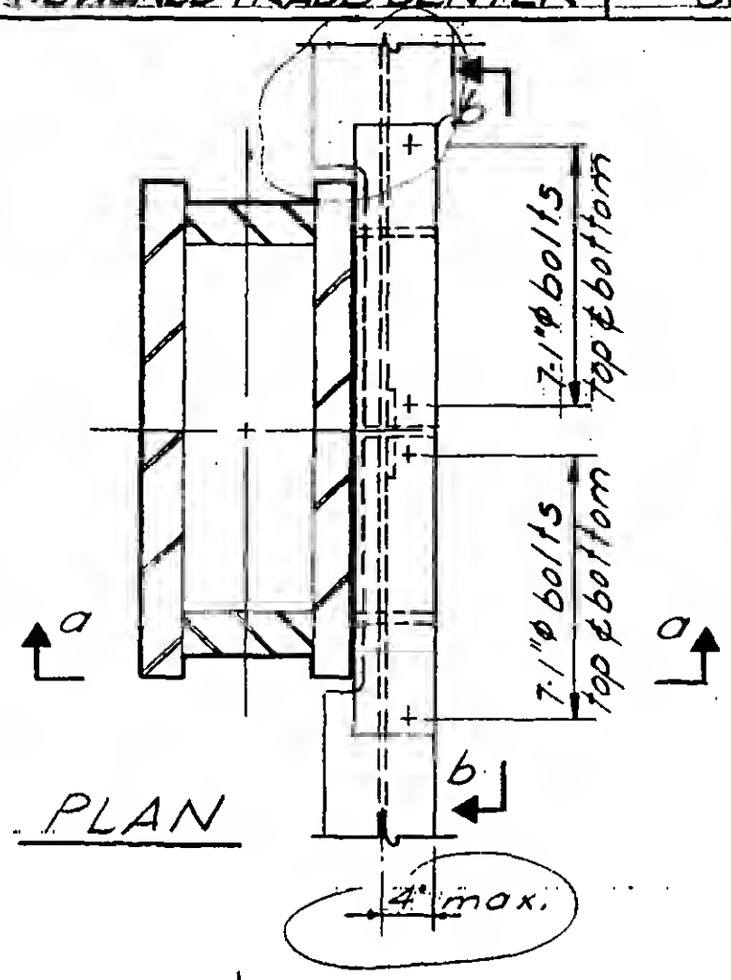

PLAN

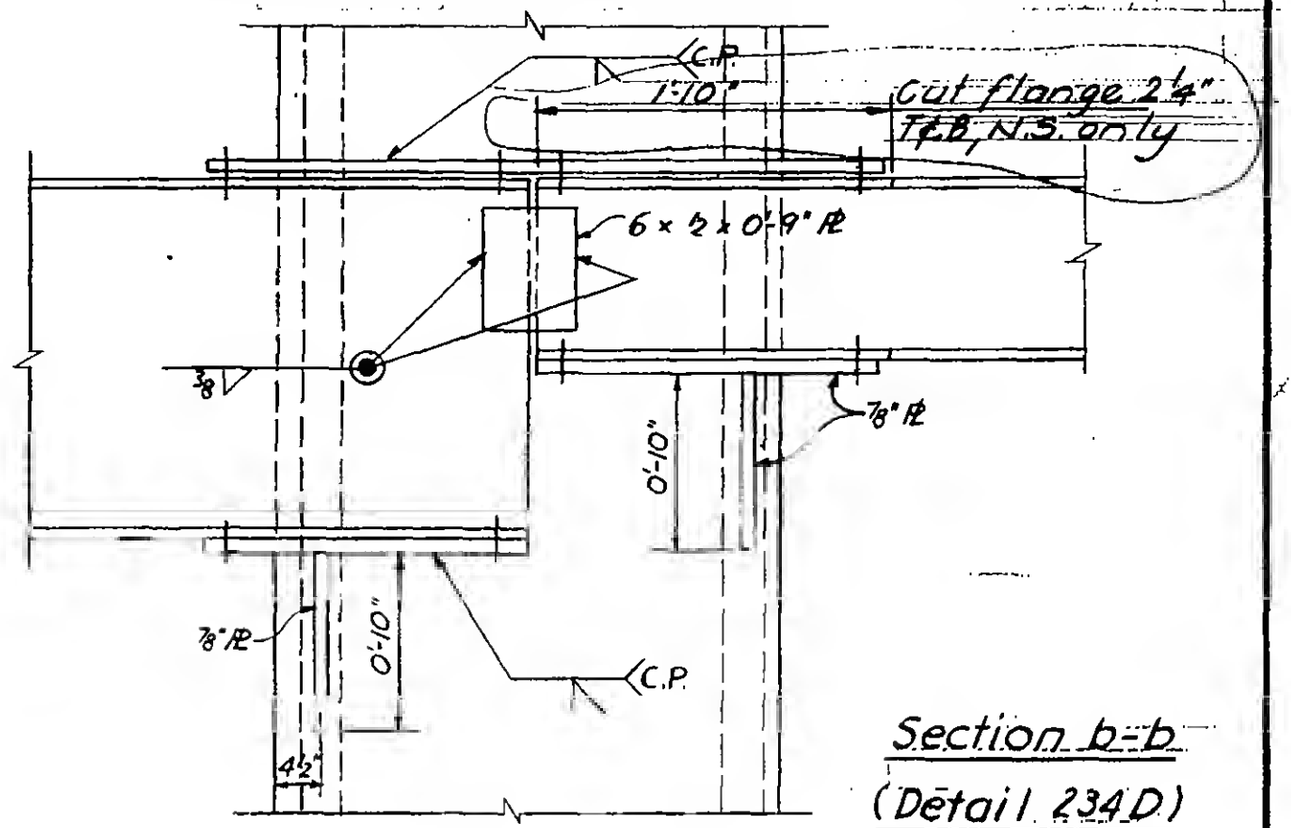

Section b-b
(Detail 234D)

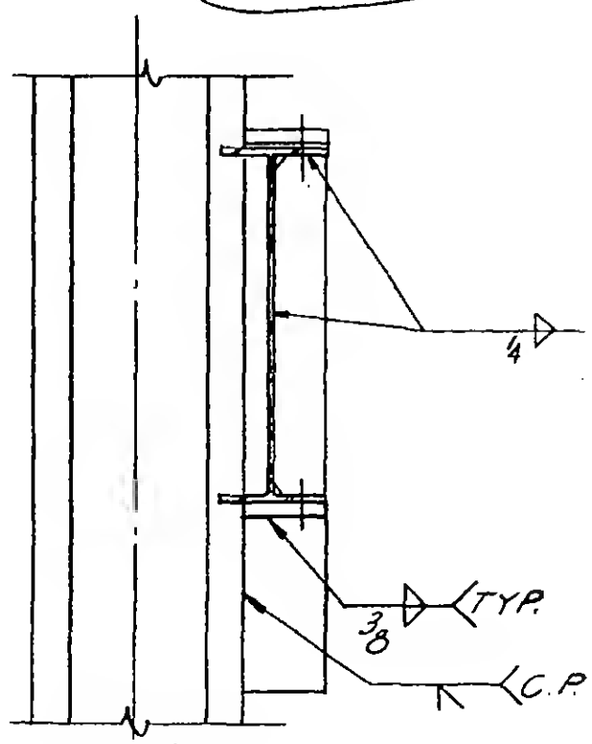

Section a-a

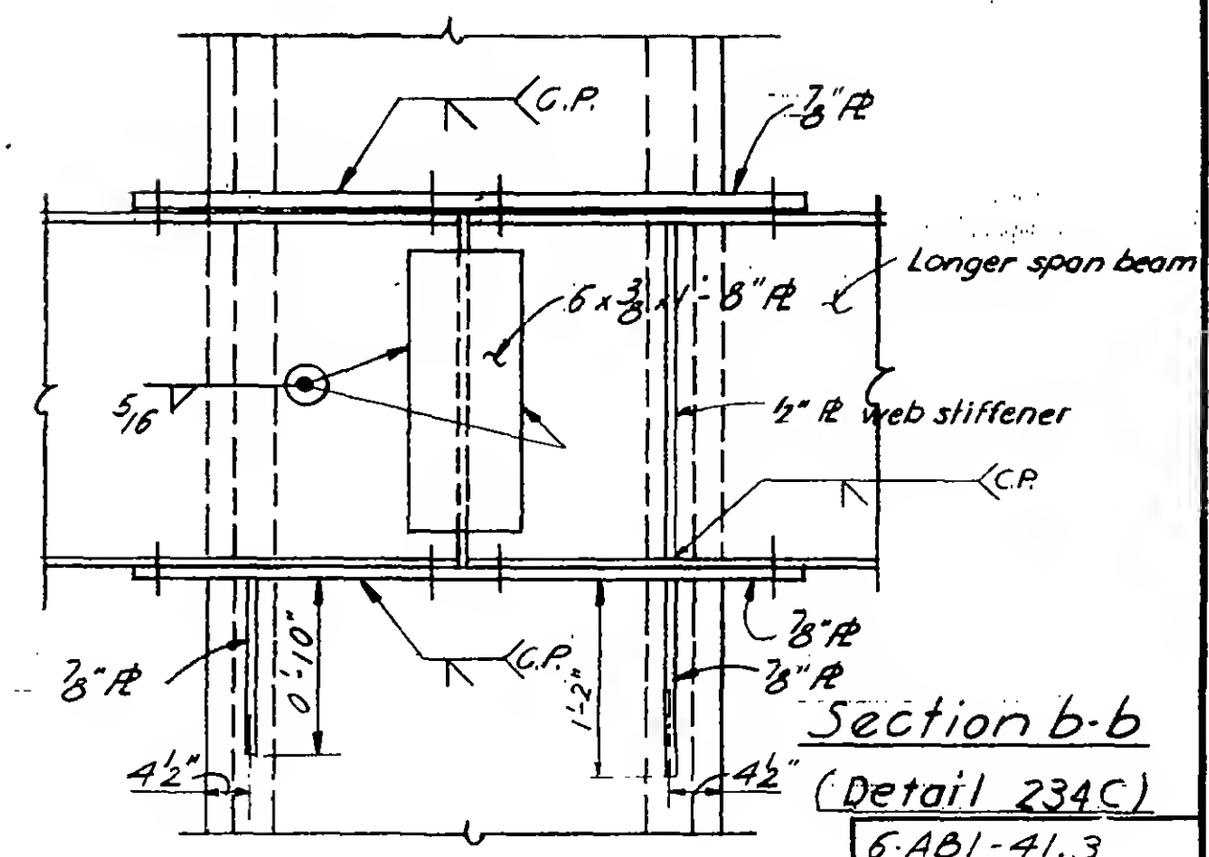

Section b-b
(Detail 234C)

6-AB1-41.3

LICENSED PROFESSIONAL ENGINEER
LESLIE E. ROBERTSON
No. 34360
UNIVERSITY OF THE STATE OF NEW YORK

SKILLING - HELLE - CHRISTIANSEN - ROBERTSON Structural & Civil Engineers

PROJECT: THE WORLD TRADE CENTER | TITLE: CONNECTION DETAIL 234.6 | DATE: 2-9-68

REVISIONS

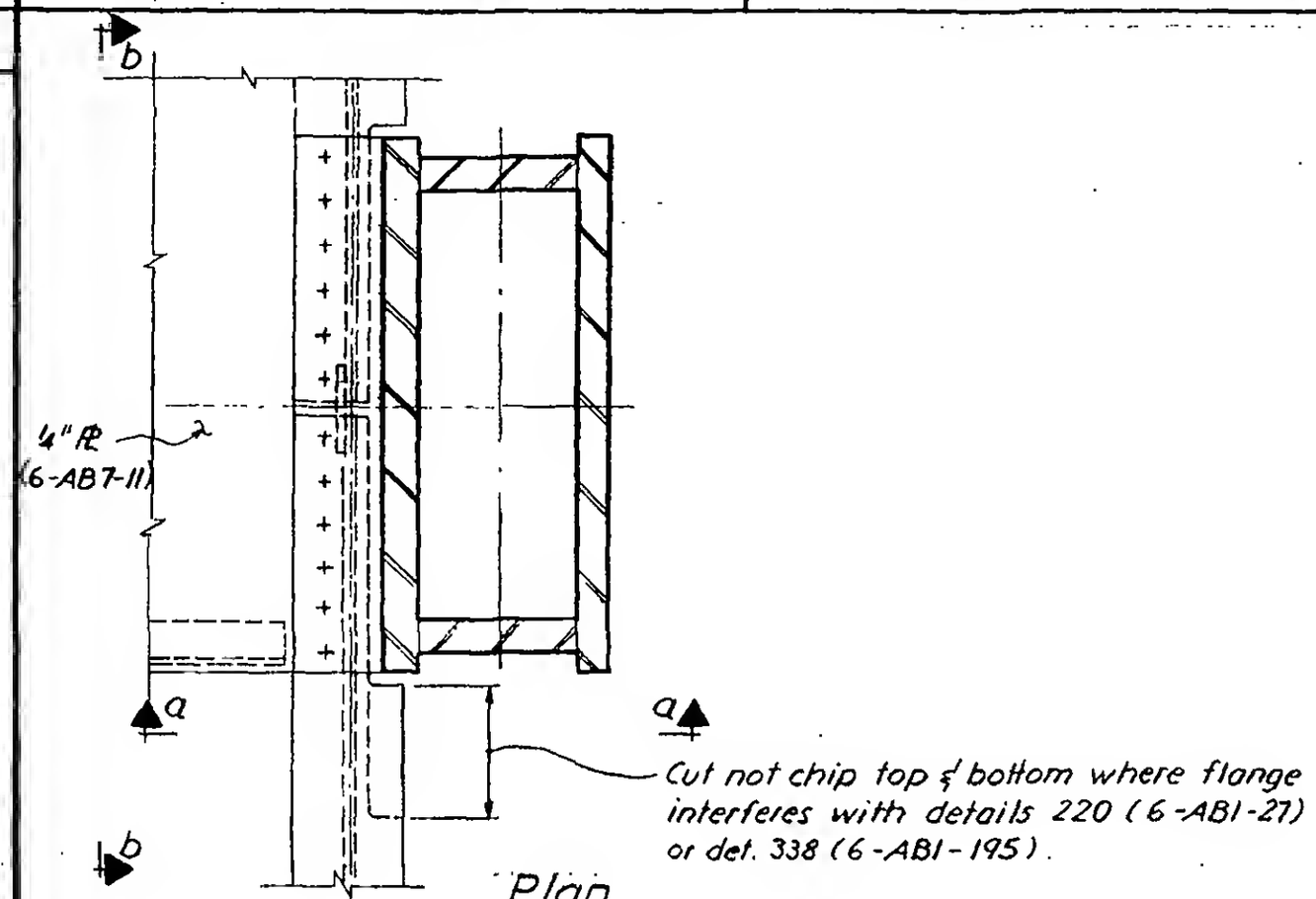

Plan

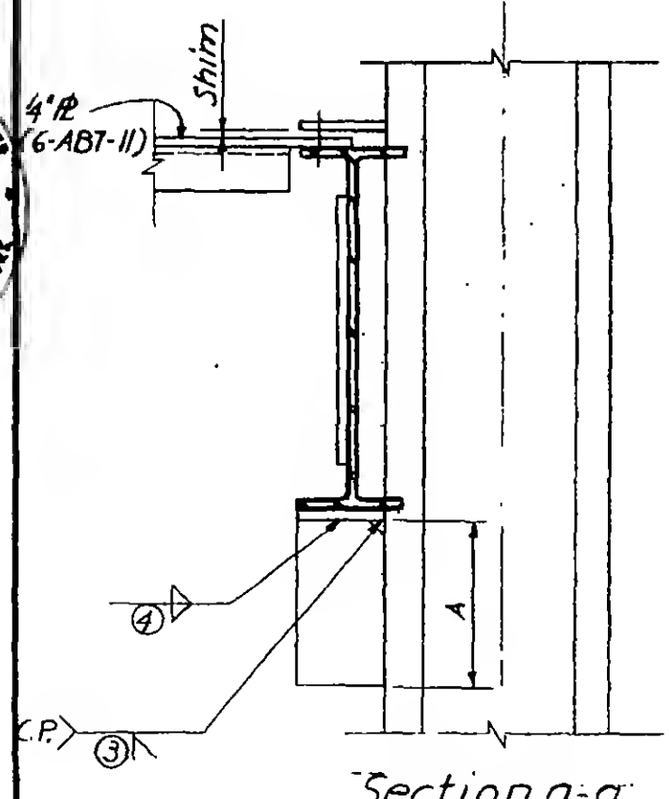

Section a-a

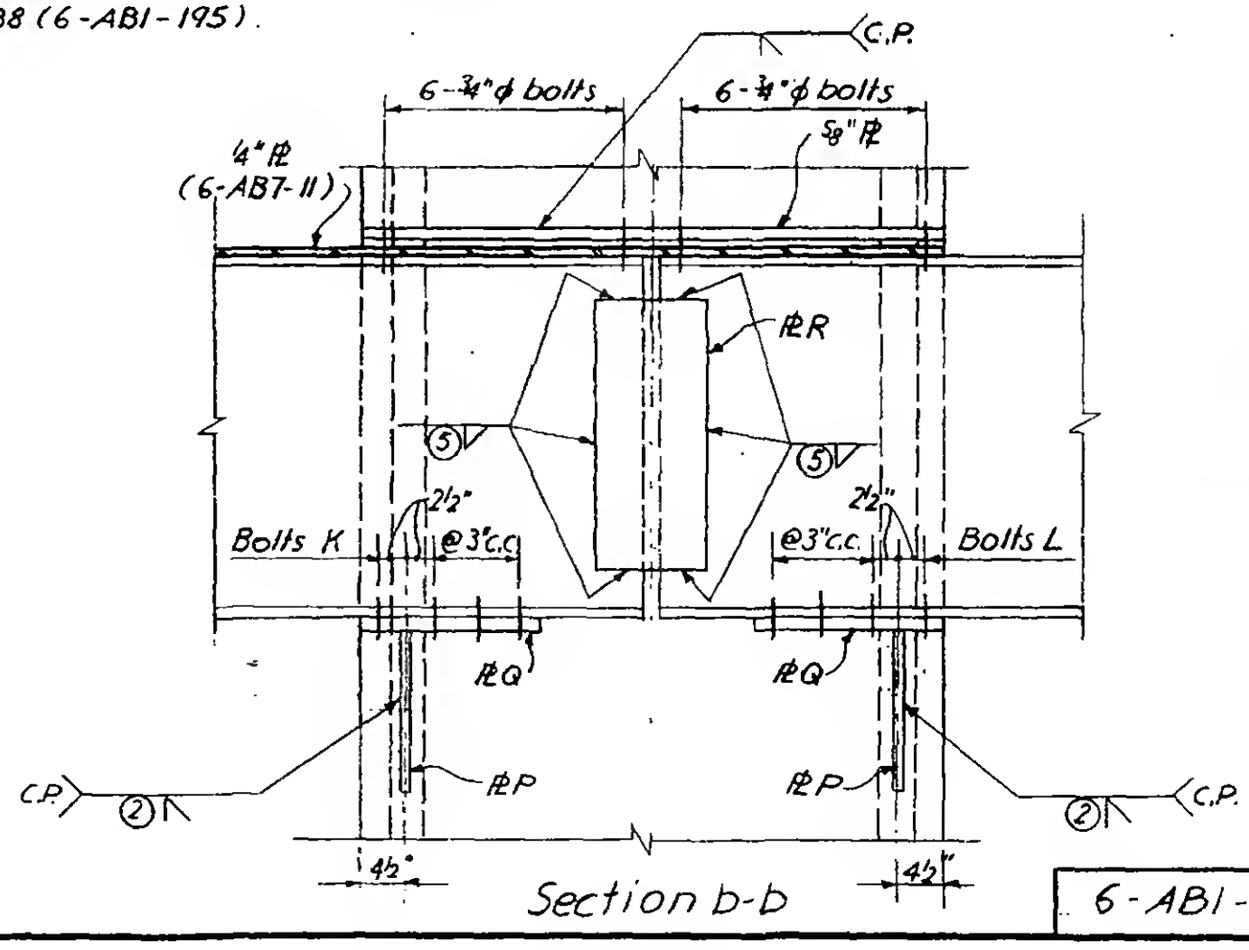

Section b-b

6-AB1-41.4

LICENSED PROFESSIONAL ENGINEER
LESLIE E. ROBERTSON
No. 34360
UNIVERSITY OF THE STATE OF NEW YORK

WORTHINGTON, SKILLING, HELLE & JACKSON — Civil & Structural Engineers

PROJECT: THE WORLD TRADE CENTER | TITLE: CONNECTION DETAIL 235 A-F | DATE: 5-1-67

REVISIONS
- 6-30-67
- 7-28-67
- 9-29-67
- 12-21-67

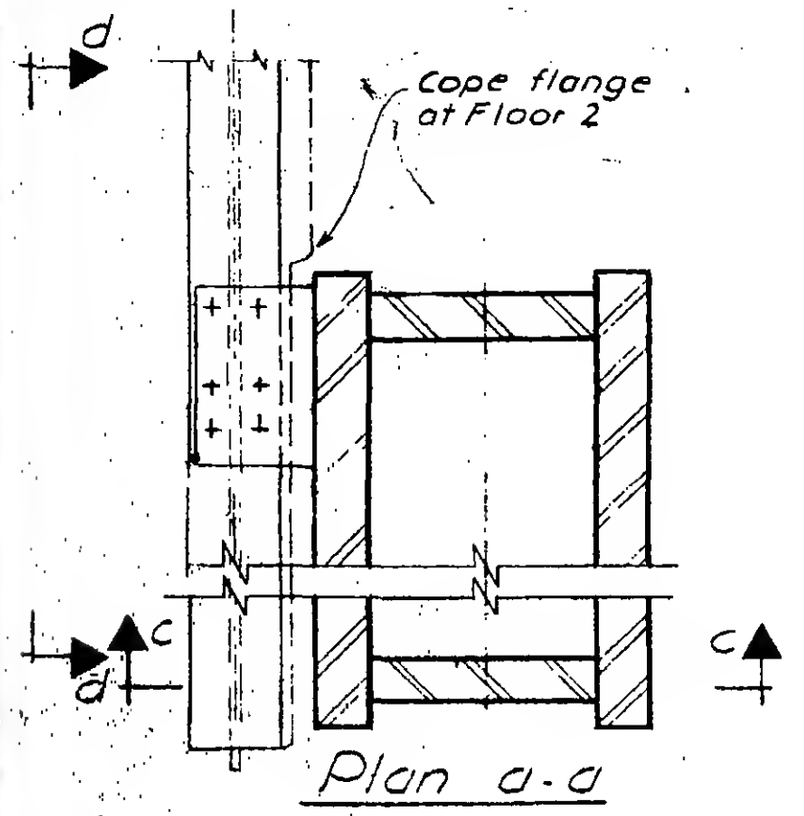

Plan a-a

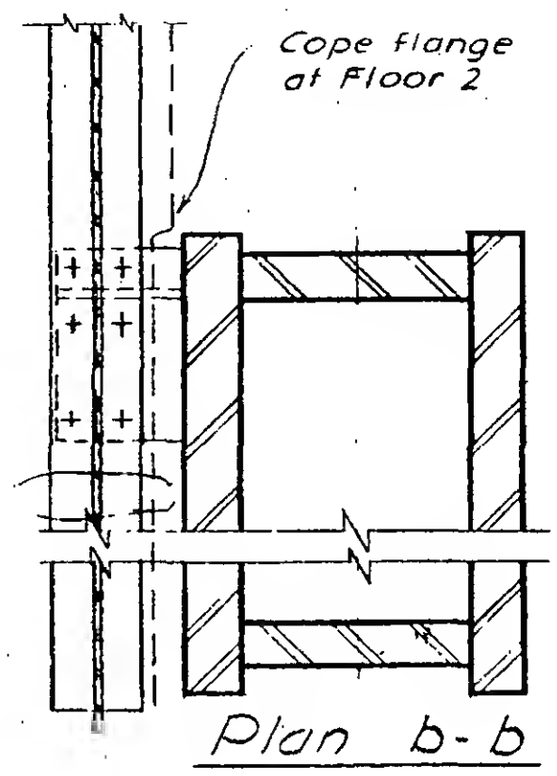

Plan b-b

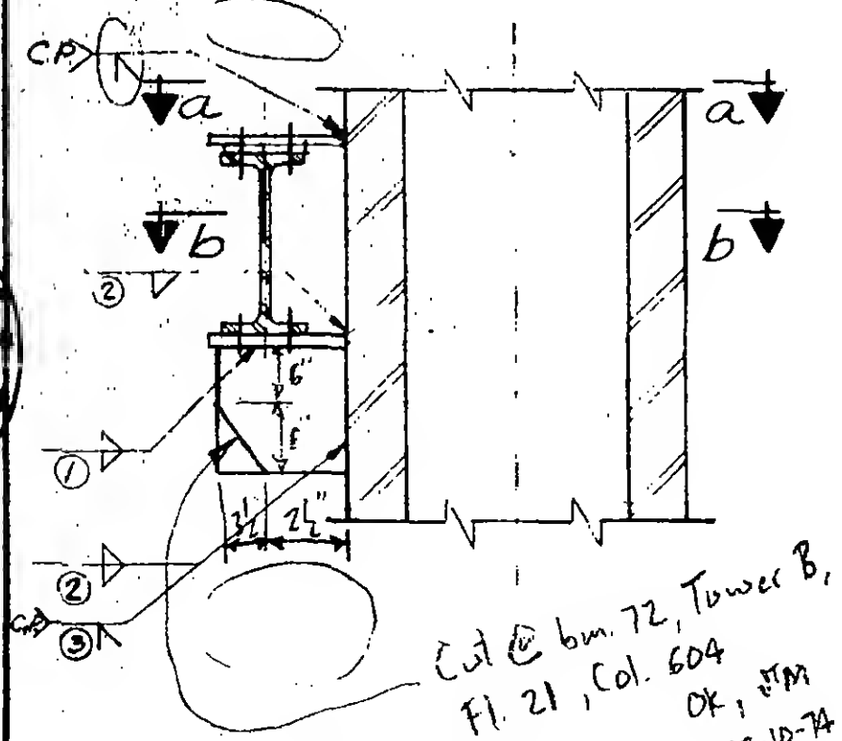

Cut @ bm. 72, Tower B, Fl. 21, Col. 604 OK, TM 12-10-74

Section c-c

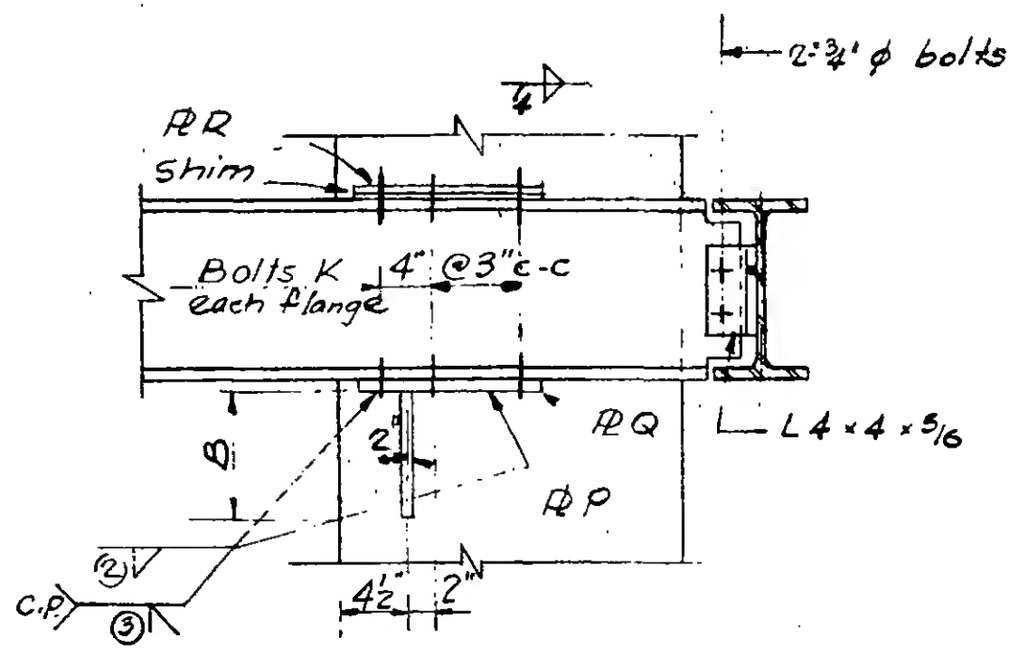

Section d-d

6-AB1-42

WORTHINGTON, SKILLING, HELLE & JACKSON — Civil & Structural Engineers

PROJECT: THE WORLD TRADE CENTER | TITLE: CONNECTION DETAIL 235 A-F. | DATE: 5-1-67

REVISIONS
- 6-30-67
- 7-28-67
- 9-29-67
- 12-21-67

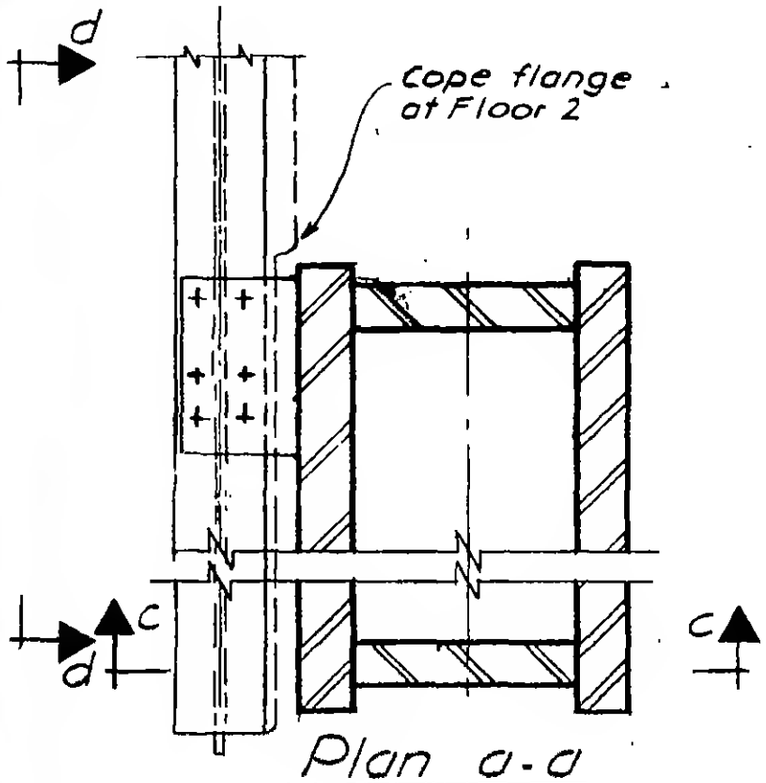

Plan a-a

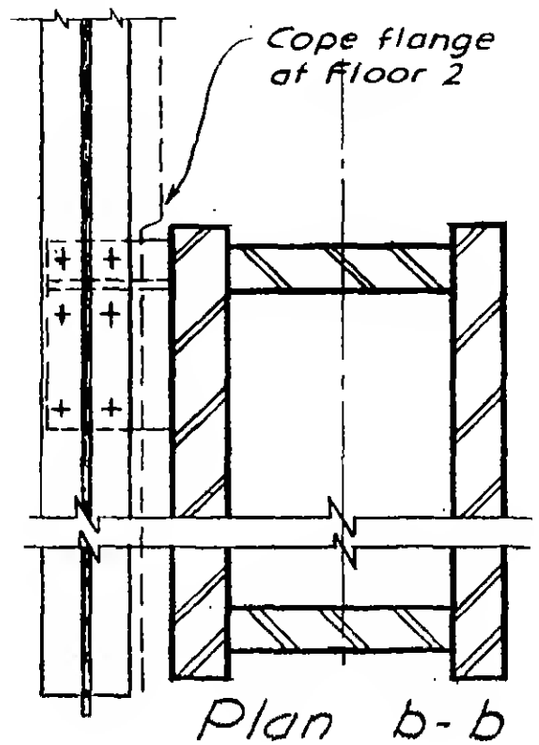

Plan b-b

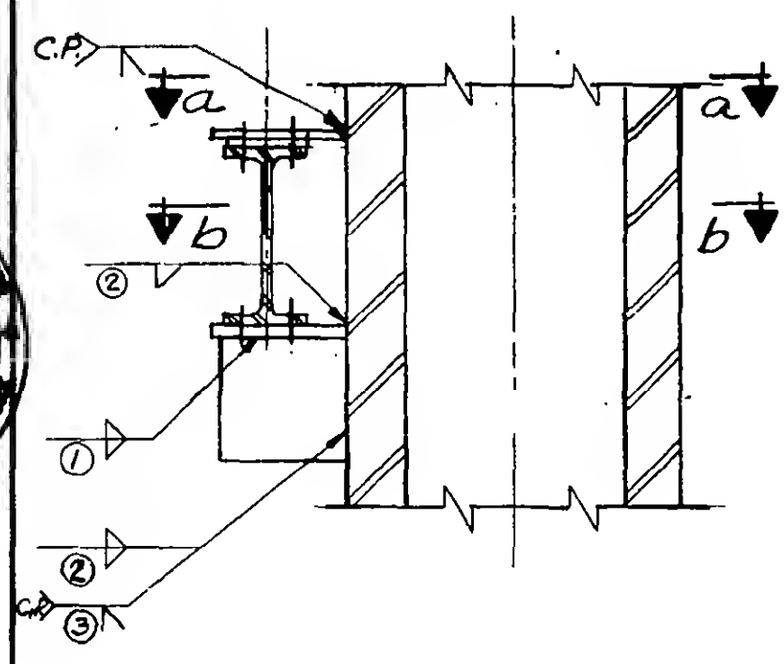

Section c-c

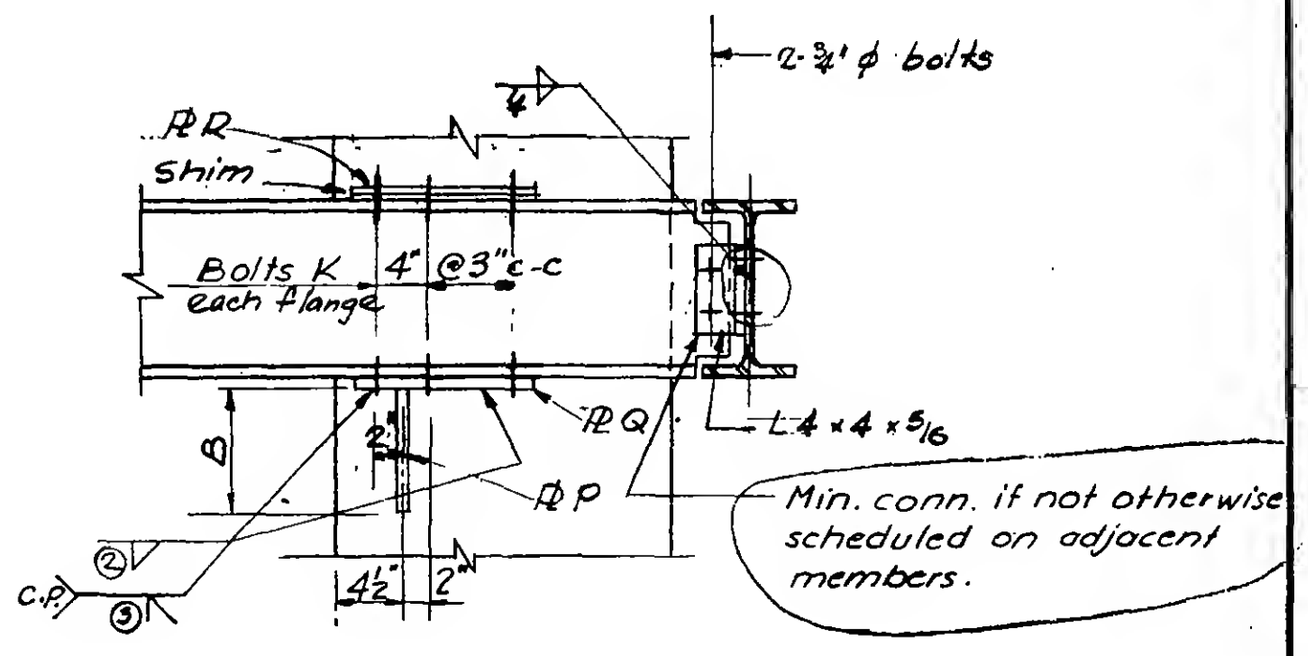

Section d-d

6-AB1-42

LESLIE E. ROBERTSON No. 24260 STATE OF NEW YORK

SKILLING - HELLE - CHRISTIANSEN - ROBERTSON Structural & Civil Engineers

PROJECT: THE WORLD TRADE CENTER | TITLE: SCHEDULE FOR DETAIL 235 A - F | DATE: 6-30-67

REVISIONS
7-28-67
12-21-67

	235 A	235 B	235 C	235 D	235 E	235 F
PLATES						
P	3/8"	7/16"	1/2"	1/2"	5/8"	5/8"
Q	3/8"	7/16"	5/8"	1/2"	3/4"	5/8"
R	3/8"	7/16"	5/8"	1/2"	3/4"	5/8"
DIMENSIONS						
B	1'-0"	1'-2"	1'-0"	1'-0"	1'-2"	1'-4"
BOLTS						
K	6 - 3/4" ϕ	6 - 3/4" ϕ	6 - 3/4" ϕ	6 - 3/4" ϕ	10 - 7/8" ϕ	6 - 3/4" ϕ
WELDS						
1	1/4	1/4	5/16	5/16	3/8	3/8
2	3/8	7/16	—	—	—	—
3	—	—	C.P.	C.P.	C.P.	C.P.

LICENSED PROFESSIONAL ENGINEER
LESLIE E. ROBERTSON
No. 34360
UNIVERSITY OF THE STATE OF NEW YORK

6-AB1-42.1

SKILLING - HELLE - CHRISTIANSEN - ROBERTSON — Structural & Civil Engineers

PROJECT: THE WORLD TRADE CENTER | TITLE: CONNECTION DETAIL 236A | DATE: 6-30-67

REVISIONS

10-5-67

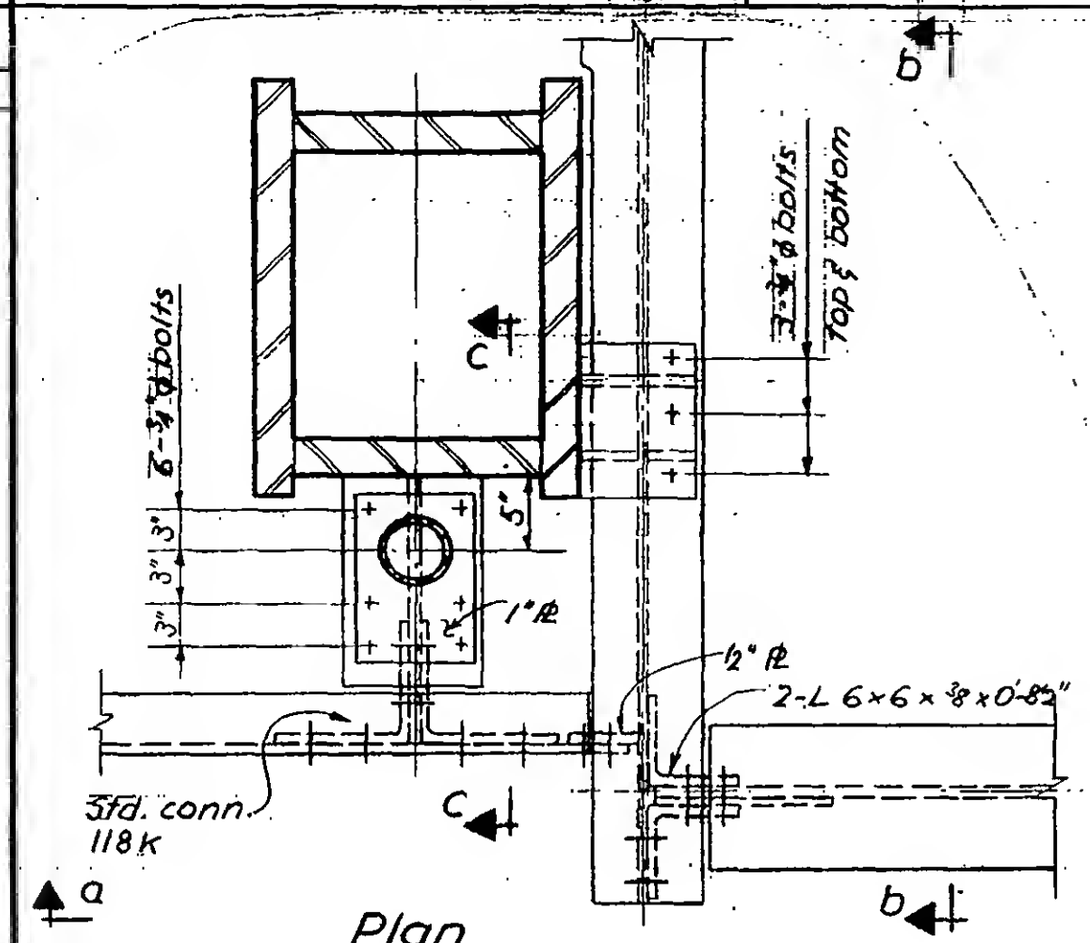

Plan

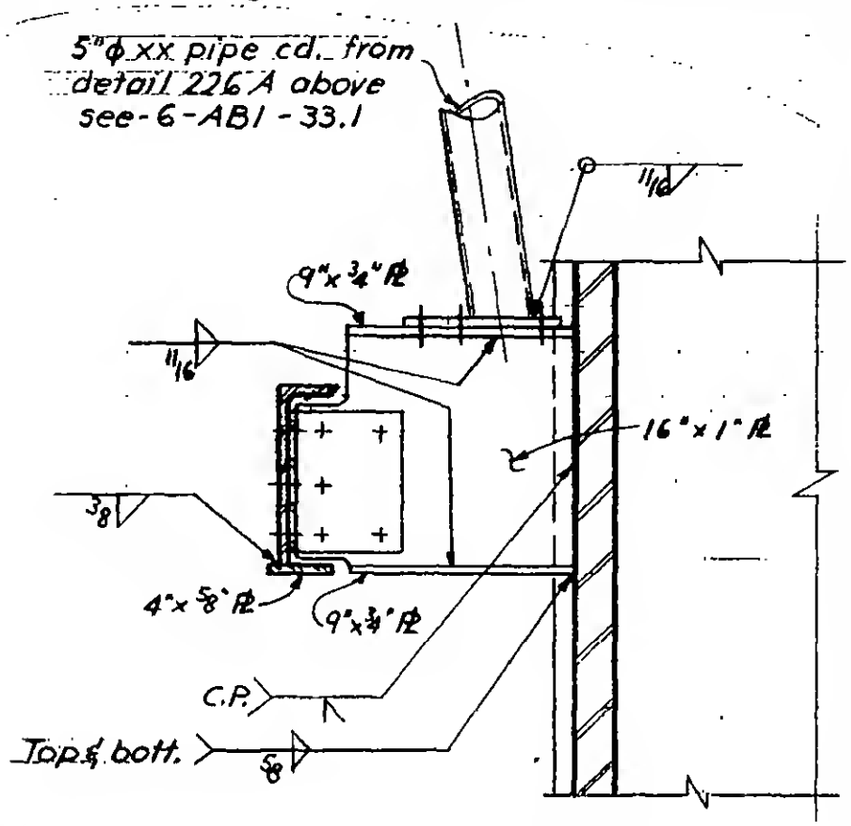

Section c-c

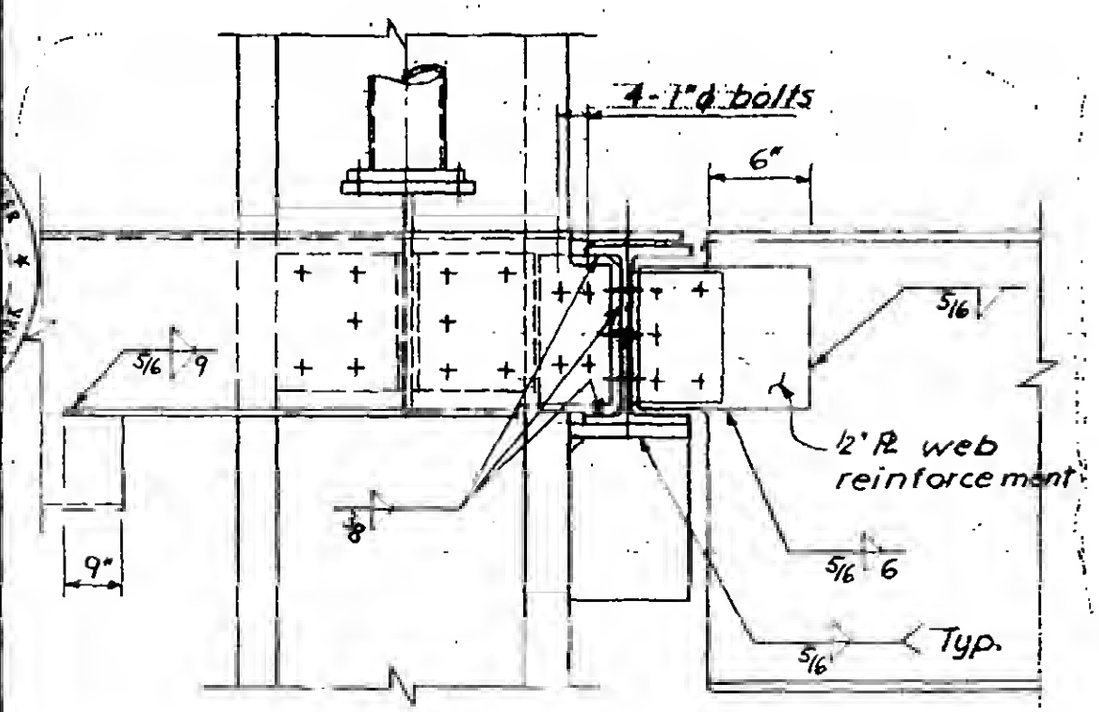

Section a-a

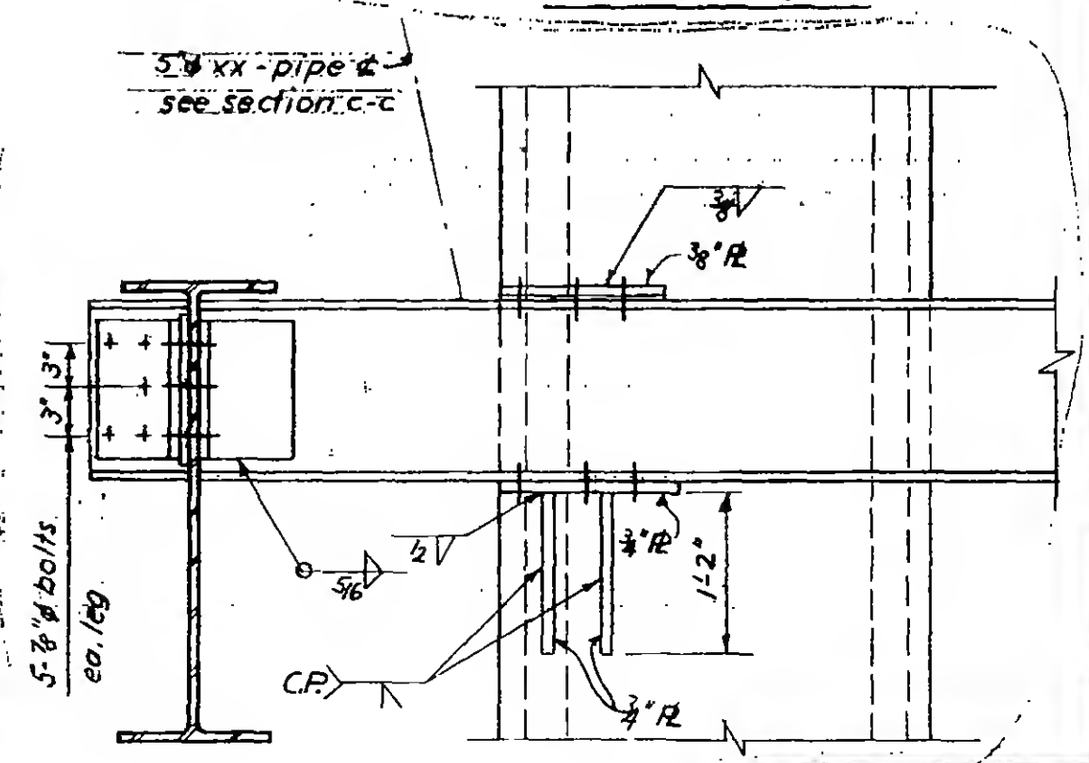

Section b-b

6-ABI-43

LICENSED PROFESSIONAL ENGINEER
LESLIE E. ROBERTSON
No. 34360
UNIVERSITY OF THE STATE OF NEW YORK

WORTHINGTON, SKILLING, HELLE & JACKSON — Civil & Structural Engineers

PROJECT: THE WORLD TRADE CENTER | TITLE: CONNECTION DETAIL 237 A, B | DATE: 5-22-67

REVISIONS: 8-14-67

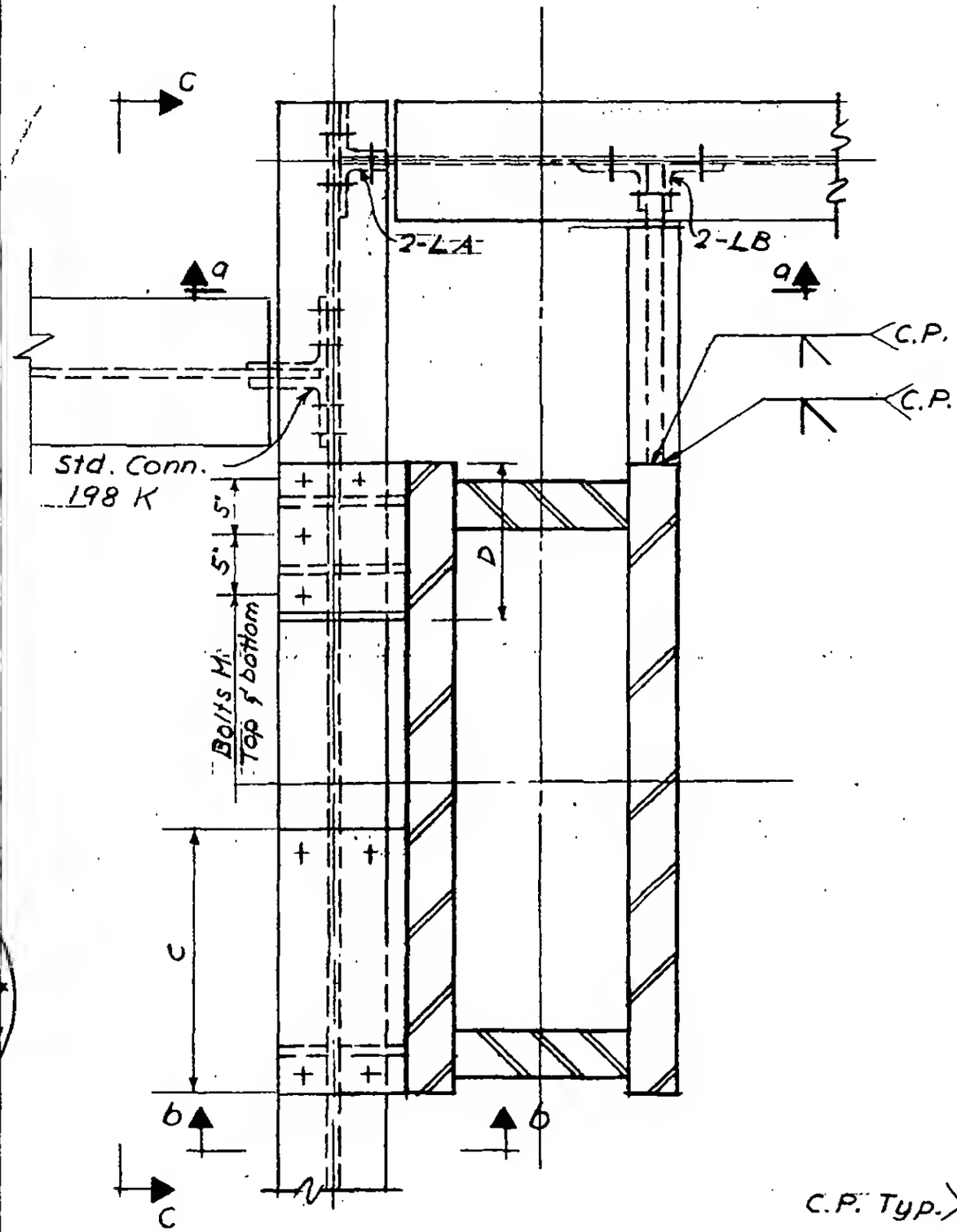

Plan

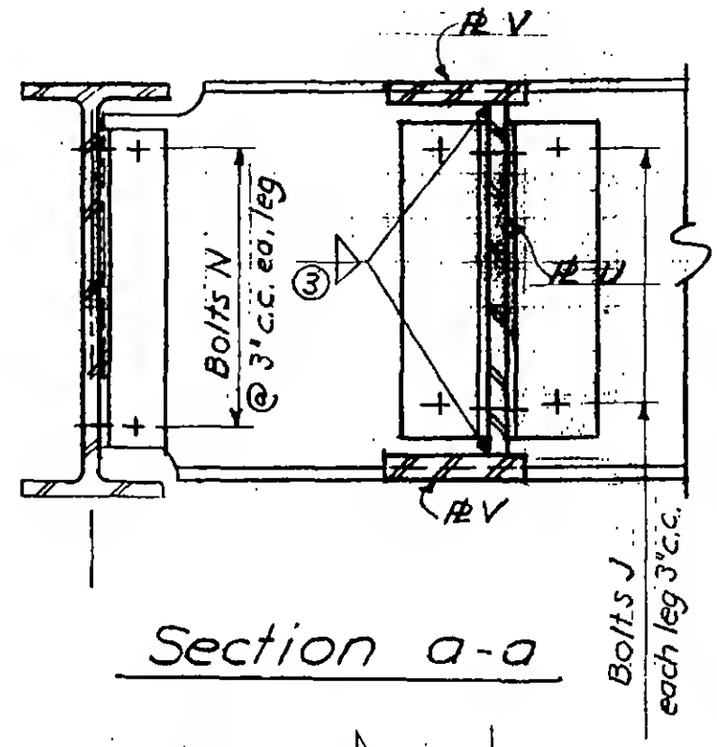

Section a-a

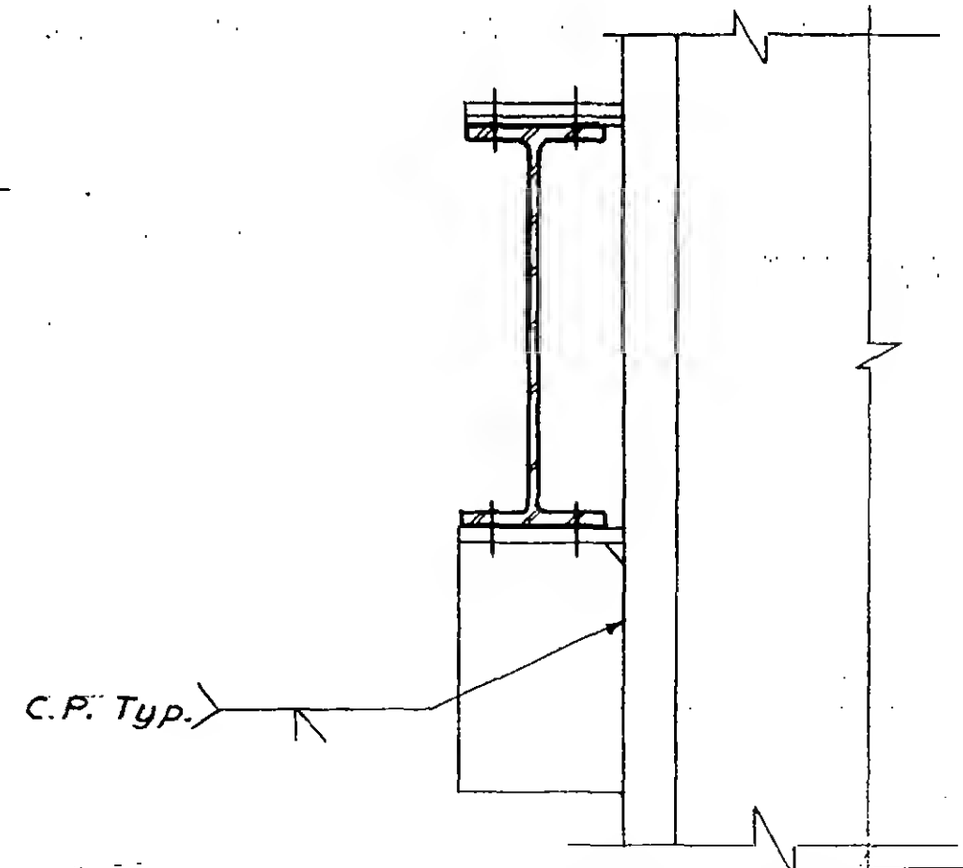

Section b-b

G-AB1-44

LICENSED PROFESSIONAL ENGINEER
LESLIE E. ROBERTSON
No. 34360
STATE OF NEW YORK

SKILLING - HELLE - CHRISTIANSEN - ROBERTSON — Structural & Civil Engineers

PROJECT: THE WORLD TRADE CENTER | TITLE: CONNECTION DETAIL 237 A B | DATE: 8-14-67

REVISIONS

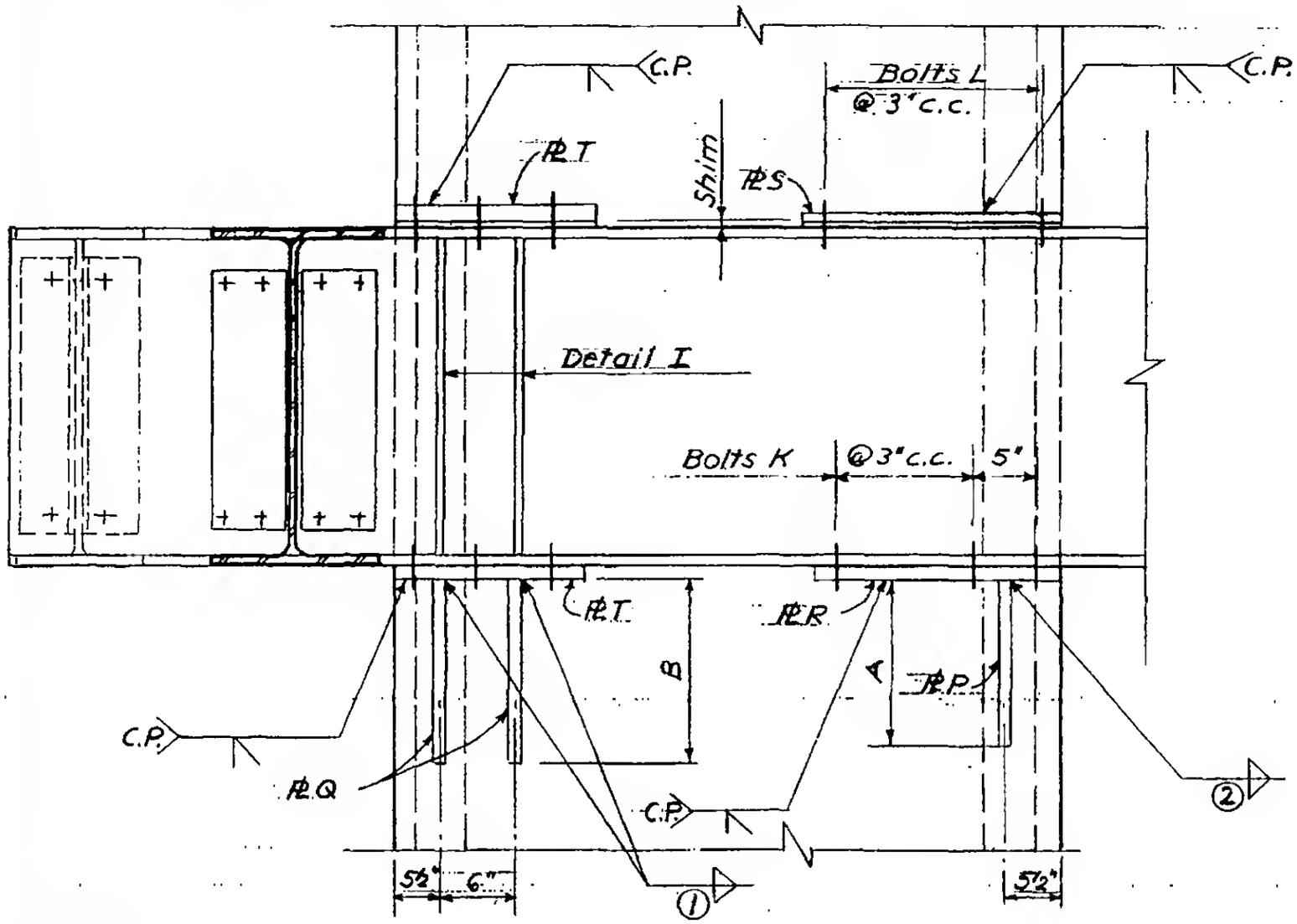

Section c-c

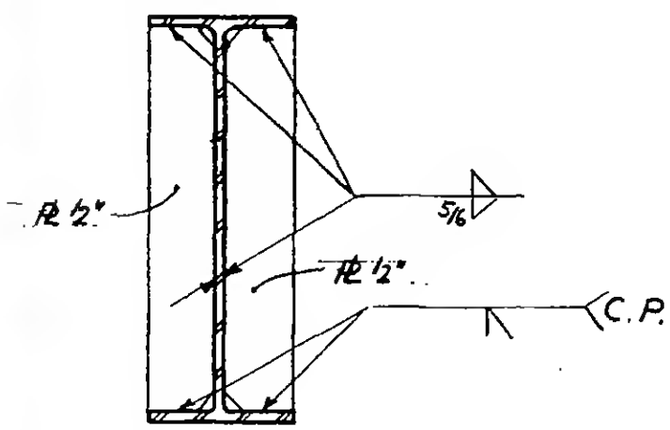

Detail I

6-AB1-44.1

SKILLING - HELLE - CHRISTIANSEN - ROBERTSON Structural & Civil Engineers

PROJECT: THE WORLD TRADE CENTER

TITLE: SCHEDULE FOR DETAIL 237 A, B, C, D, E & F

DATE: 8-14-67

REVISIONS

10-7-67

2-9-68

	237A	237B	237C & D	237E	237F
PLATES					
P	1"	1"	3/4"	1"	1"
Q	1"	1"	1"	1"	1"
R	1"	1"	—	1"	1"
S	1"	1"	3/4"	5/8"	5/8"
T	1"	1"	1"	—	—
U	1/2"	1/2"	3/4"	1/2"	1/2"
V	1"	1 1/2"	1 1/2"	1 1/2"	1"
DIMENSIONS					
A	1'-4"	1'-4"	1'-2"	1'-4"	1'-4"
B	1'-6"	1'-6"	1'-6"	1'-6"	1'-6"
C	1'-10"	1'-10"	—	—	—
D	1'-5"	1'-5"	—	—	—
ANGLES					
A	4 x 3 1/2 x 5/16 x 1'-8 1/2"	4 x 3 1/2 x 5/16 x 1'-8 1/2"	Standard connections	4 x 3 1/2 x 7/16 x 0'-11 1/2"	4 x 3 1/2 x 5/16 x 1'-8 1/2"
B	4 x 3 1/2 x 5/16 x 1'-8 1/2"	4 x 3 1/2 x 7/16 x 0'-11 1/2"		4 x 3 1/2 x 7/16 x 0'-11 1/2"	4 x 3 1/2 x 5/16 x 1'-8 1/2"
BOLTS					
J	7 - 3/4" ϕ	4 - 1" ϕ	1"	4 - 1" ϕ	7 - 3/4" ϕ
K	10 - 1" ϕ	10 - 1" ϕ	10 - 1 8" ϕ A490	15 - 3/4" ϕ	15 - 3/4" ϕ
L	10 - 1" ϕ	10 - 1" ϕ	—	16 - 3/4" ϕ	16 - 3/4" ϕ
M	4 - 1" ϕ	4 - 1" ϕ	—	—	—
N	7 - 3/4" ϕ	7 - 3/4" ϕ	—	4 - 1" ϕ	7 - 3/4" ϕ
WELDS					
1	5/16	5/16	1/2	5/16	5/16
2	5/16	5/16	3/8	5/16	5/16
3	1/2	1/2	3/8	1/2	1/2

LICENSED PROFESSIONAL ENGINEER LESLIE E. ROBERTSON No. 34360 UNIVERSITY OF THE STATE OF NEW YORK

6-AB1-44.2

SKILLING - HELLE - CHRISTIANSEN - ROBERTSON Structural & Civil Engineers

PROJECT THE WORLD TRADE CENTER | TITLE CONNECTION DETAIL 237 C & D | DATE 10-7-67

REVISIONS

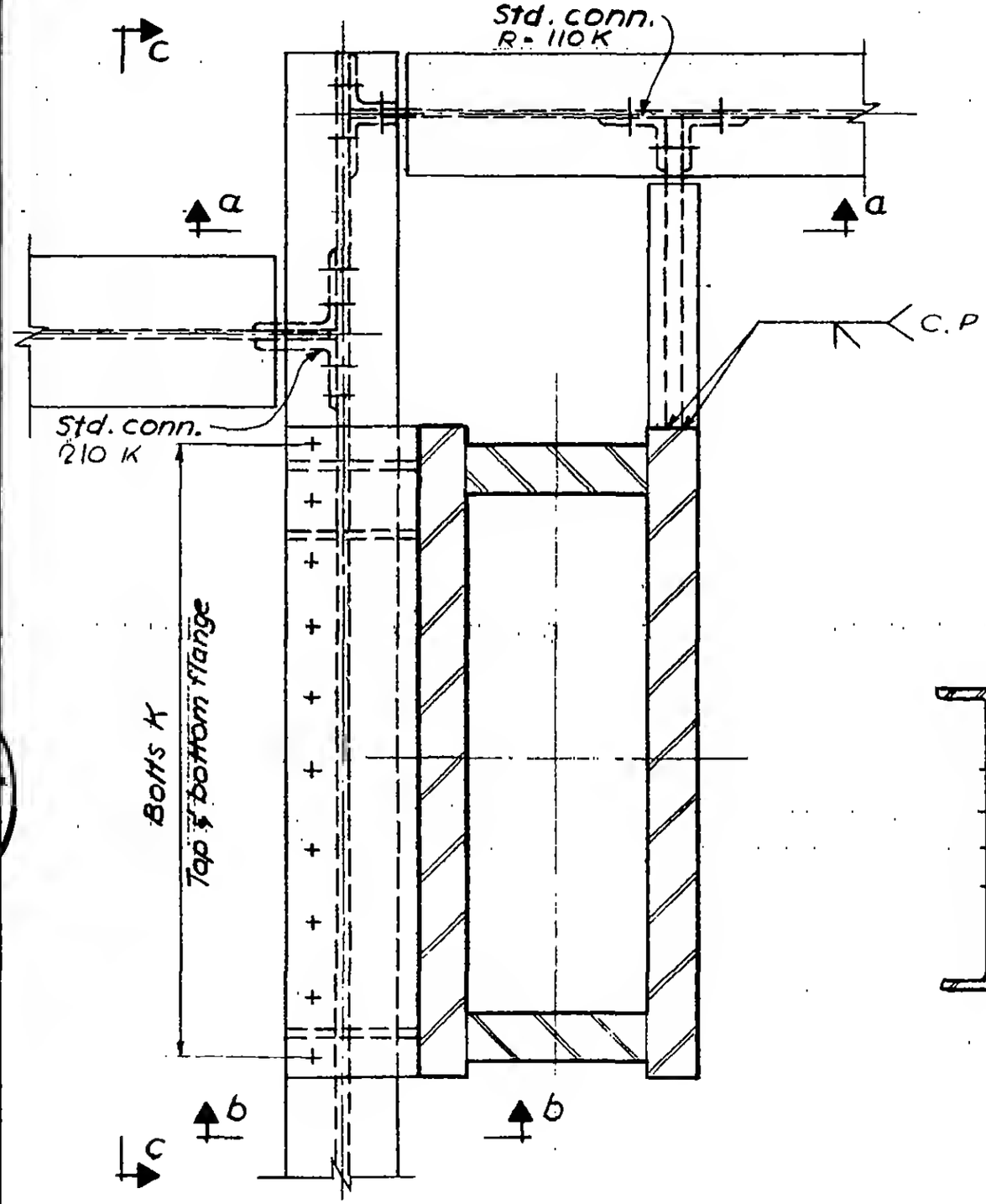

Plan

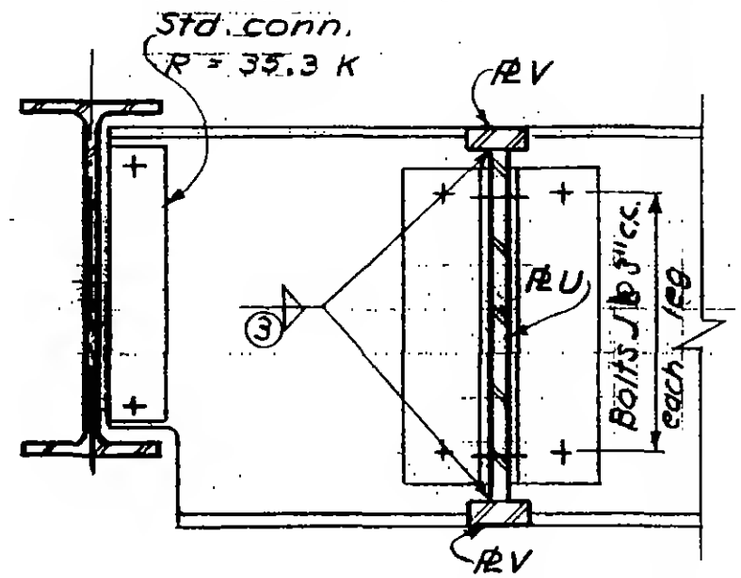

Section a-a
Detail 237 C only

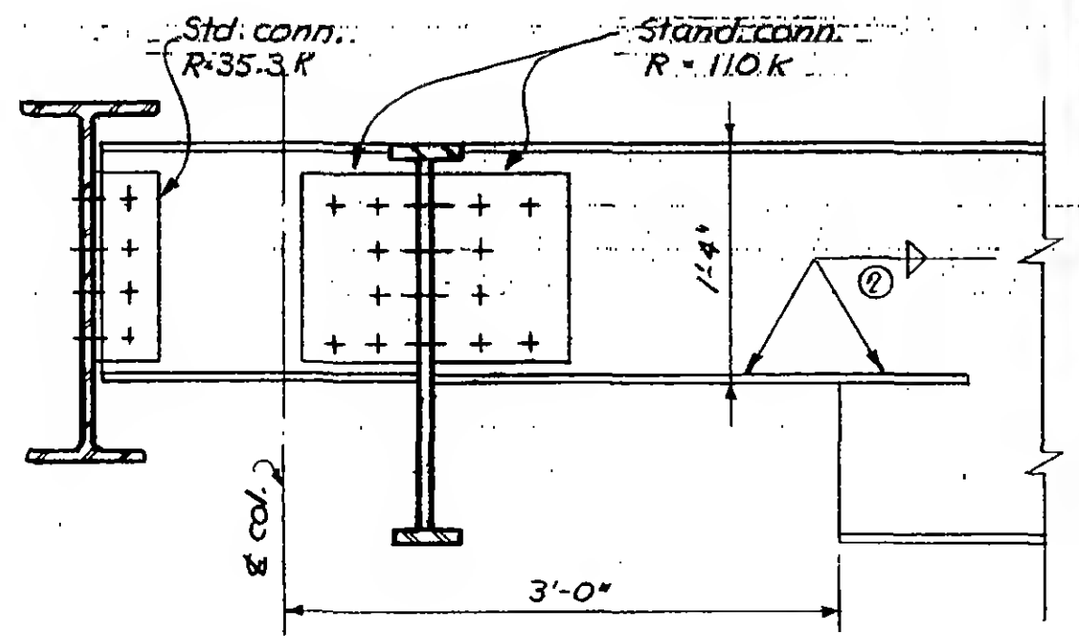

Section a-a
Detail 237D only

6-AB1-44.3

LICENSED PROFESSIONAL ENGINEER
LESLIE E. ROBERTSON
No. 34360
UNIVERSITY OF THE STATE OF NEW YORK

SKILLING - HELLE - CHRISTIANSEN - ROBERTSON — Structural & Civil Engineers

PROJECT: THE WORLD TRADE CENTER | TITLE: CONNECTION DETAIL 237 C & D | DATE: 10-2-61

REVISIONS

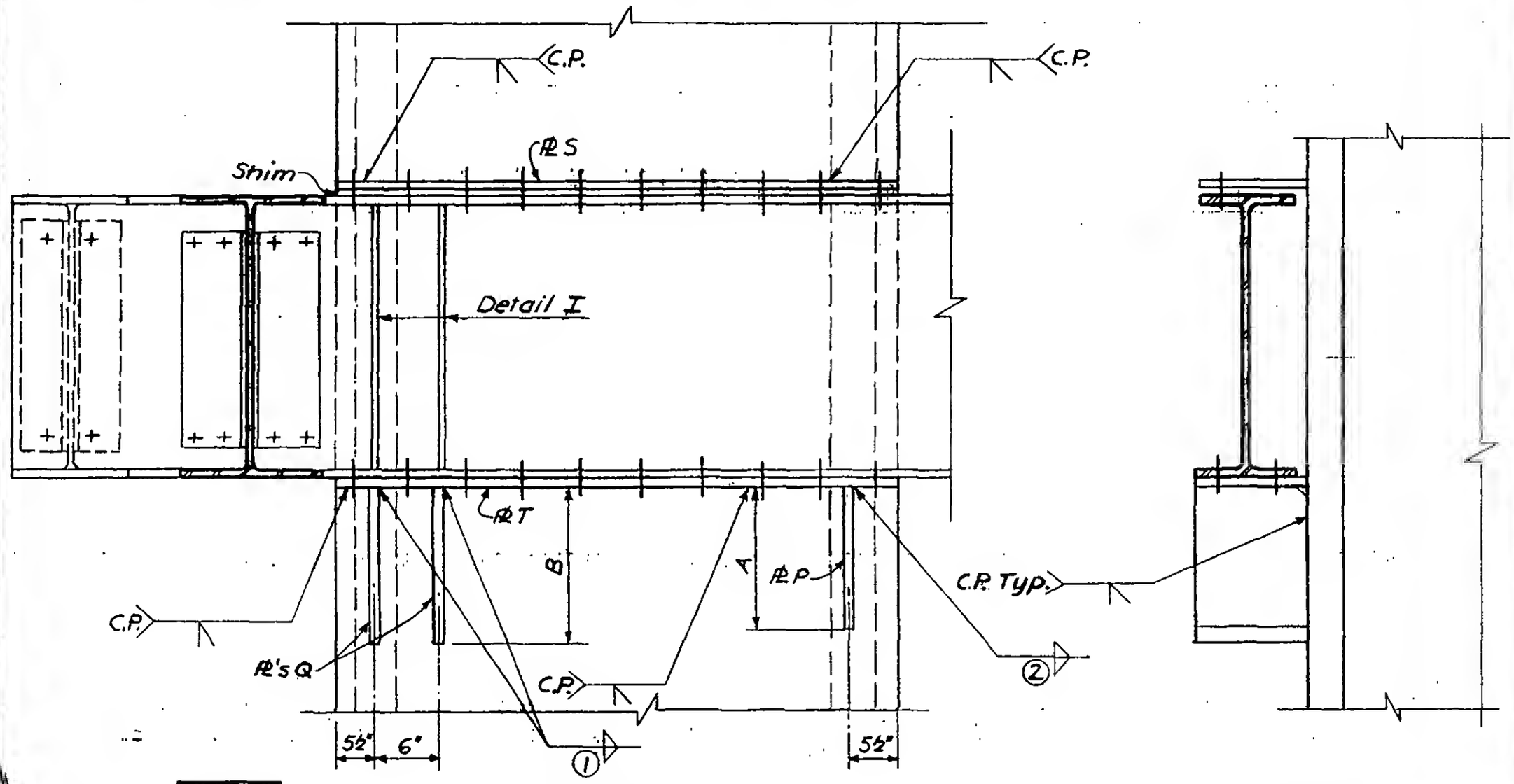

Section c-c

Section b-b

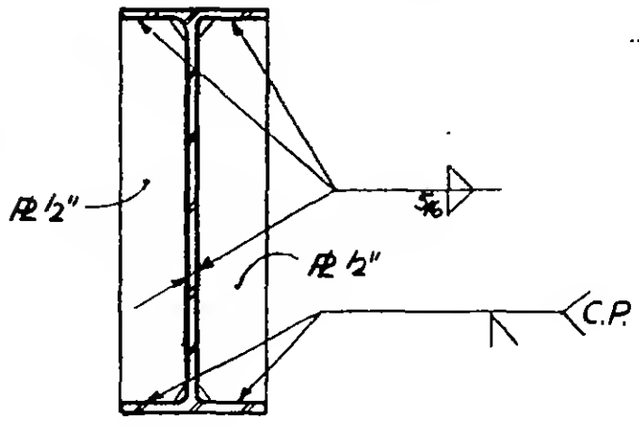

Detail I

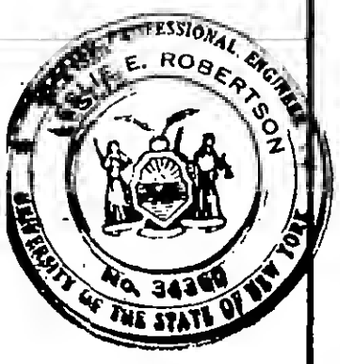

6-AB1-44.4

SKILLING - HELLE - CHRISTIANSEN - ROBERTSON Structural & Civil Engineers

PROJECT: THE WORLD TRADE CENTER | TITLE: CONNECTION DETAIL 237 E & F | DATE: 2-9-68

REVISIONS

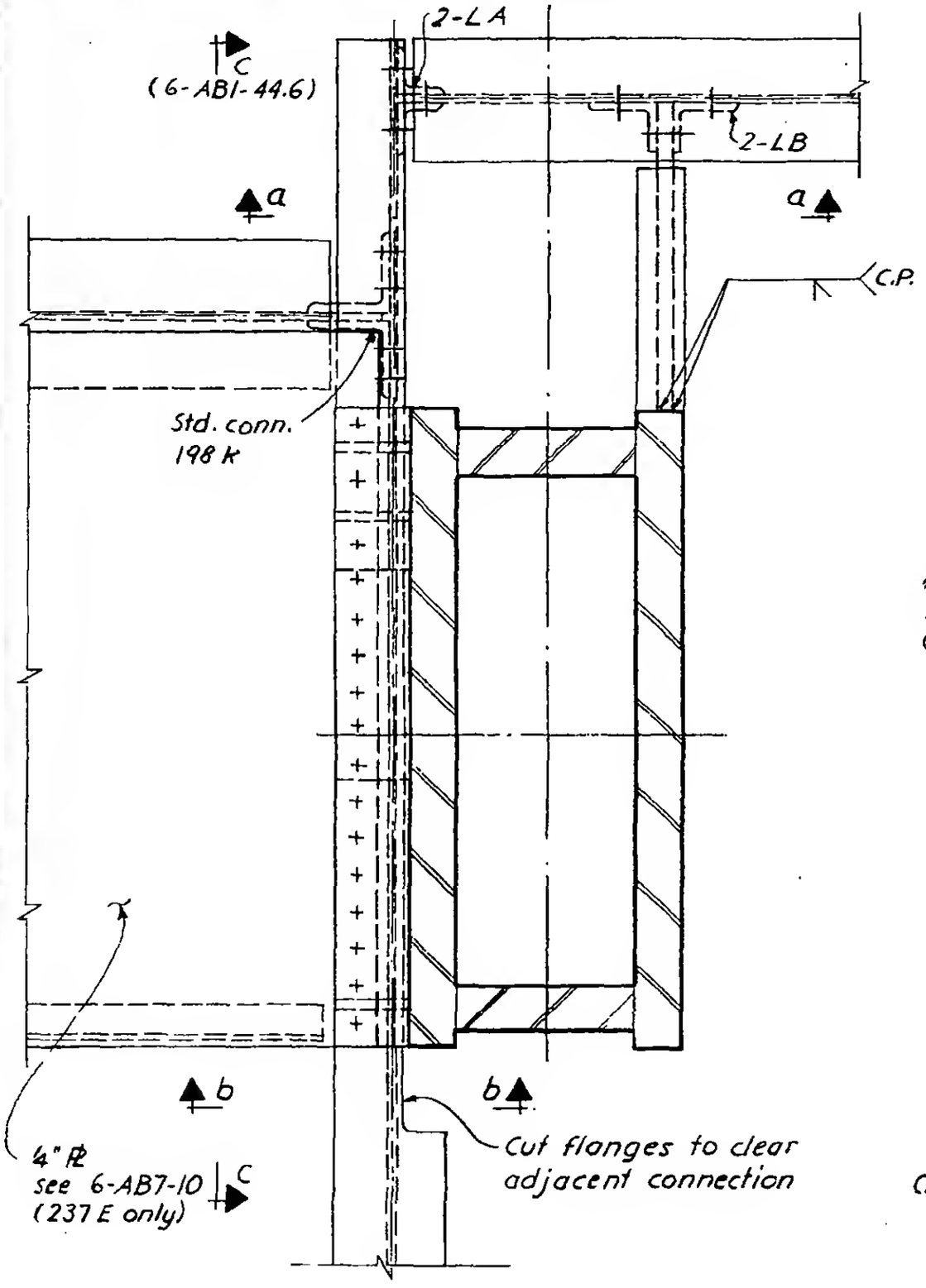

Plan

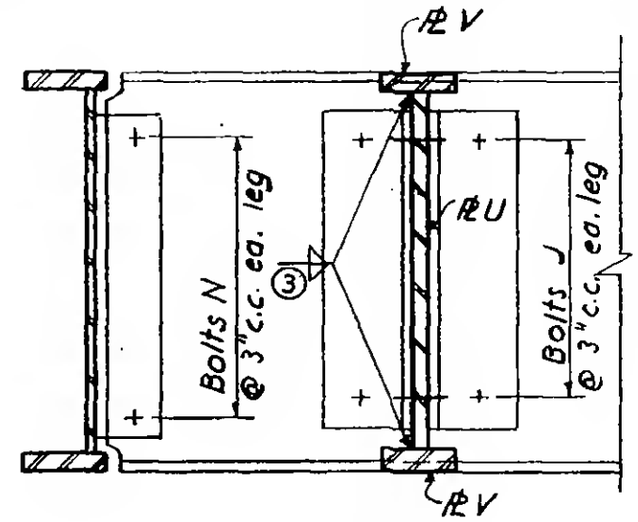

Section a-a

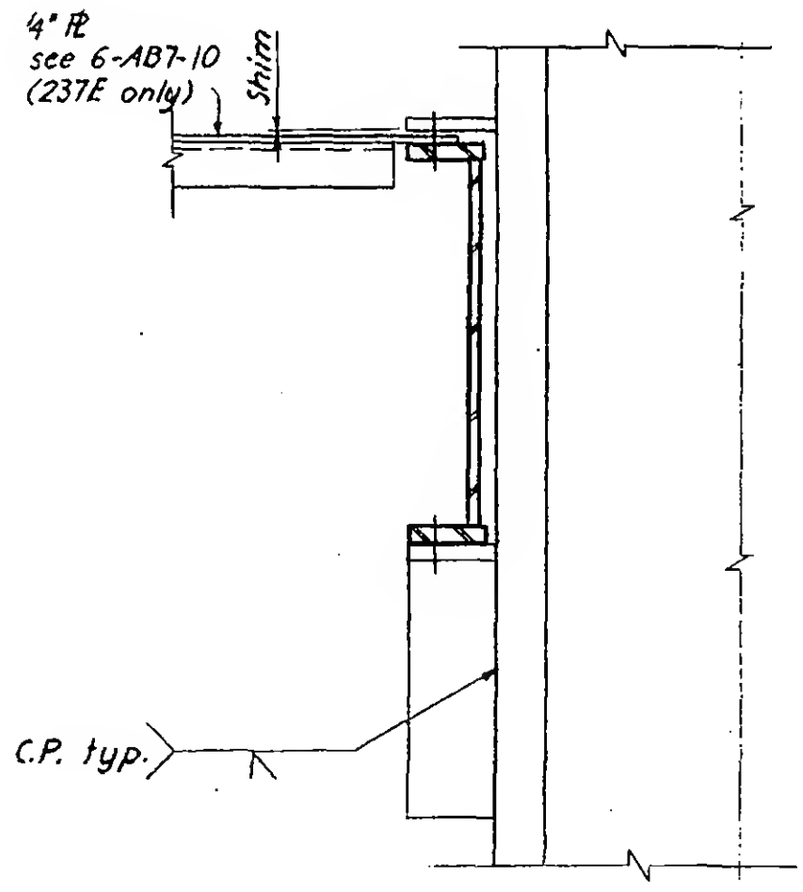

Section b-b

6-AB1-44.5

LICENSED PROFESSIONAL ENGINEER
LESLIE E. ROBERTSON
No. 34360
UNIVERSITY OF THE STATE OF NEW YORK

SKILLING - HELLE - CHRISTIANSEN - ROBERTSON Structural & Civil Engineers

PROJECT THE WORLD TRADE CENTER | TITLE CONNECTION DETAIL 237 E & F | DATE 2-9-68

REVISIONS

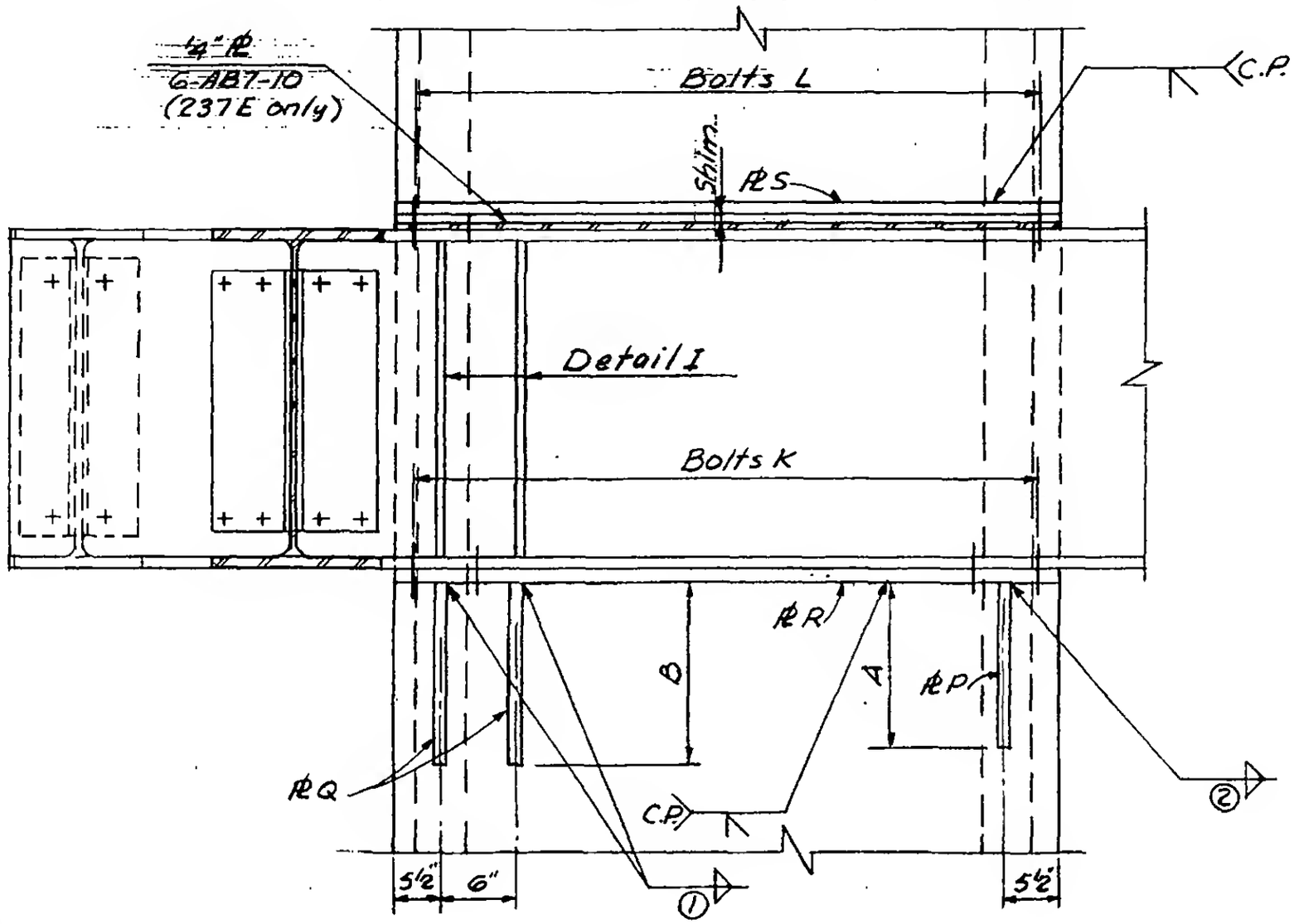

Section C-C

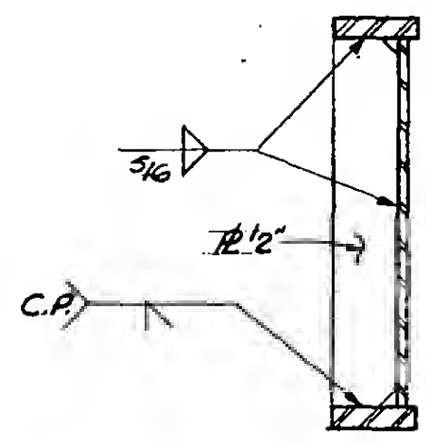

Detail I

6-AB1-44.6

SKILLING, HELLE, CHRISTIANSEN, ROBERTSON — Structural & Civil Engineers

PROJECT: THE WORLD TRADE CENTER | TITLE: CONNECTION DETAIL 237 G, H, I, J | DATE: 9-18-68

REVISIONS

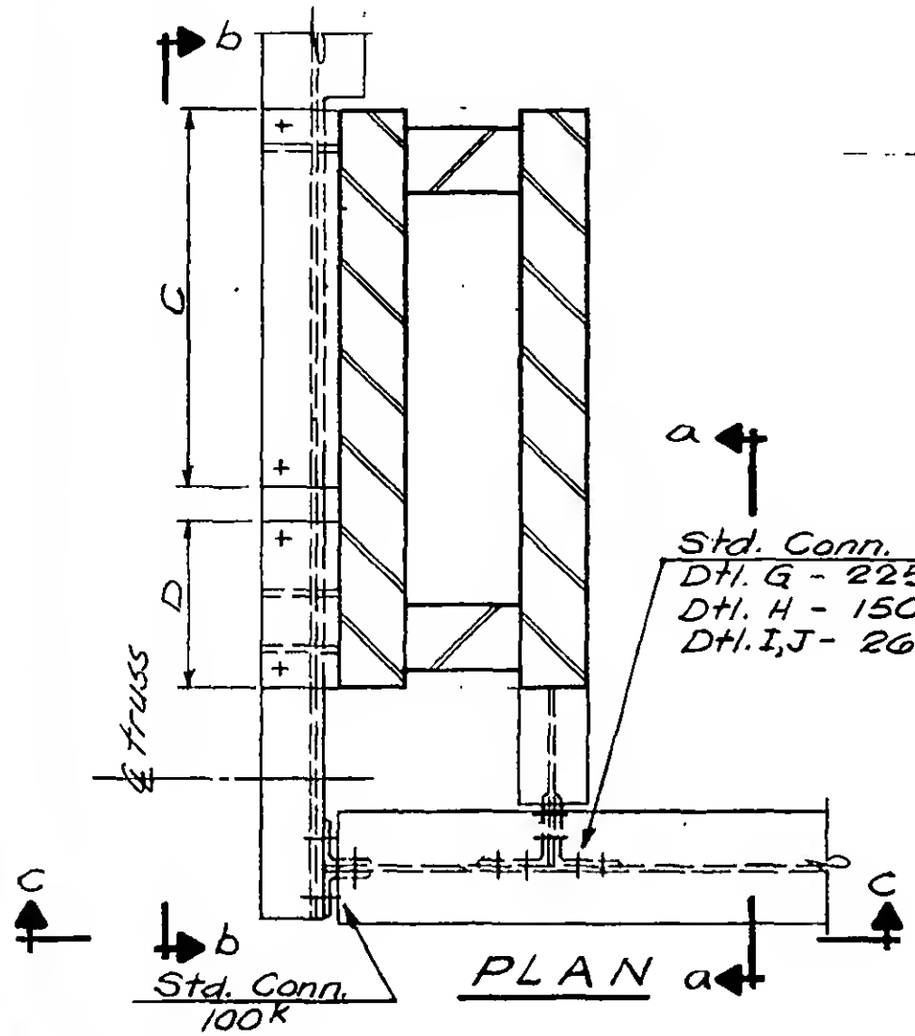

PLAN a

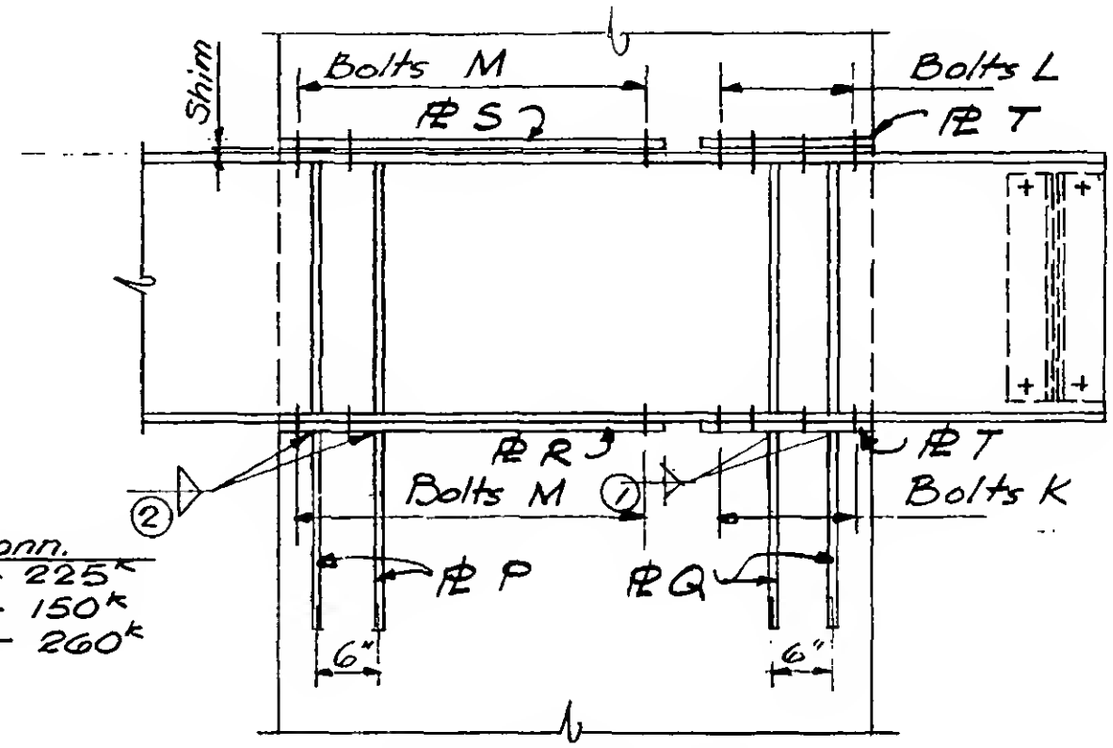

SECTION b-b

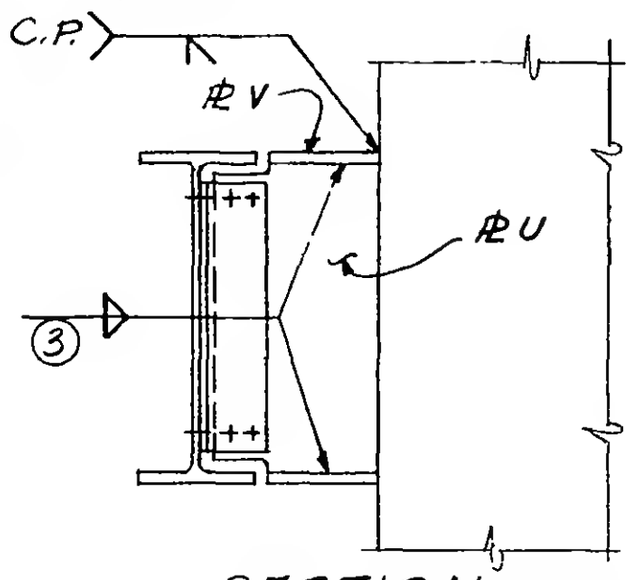

SECTION a-a

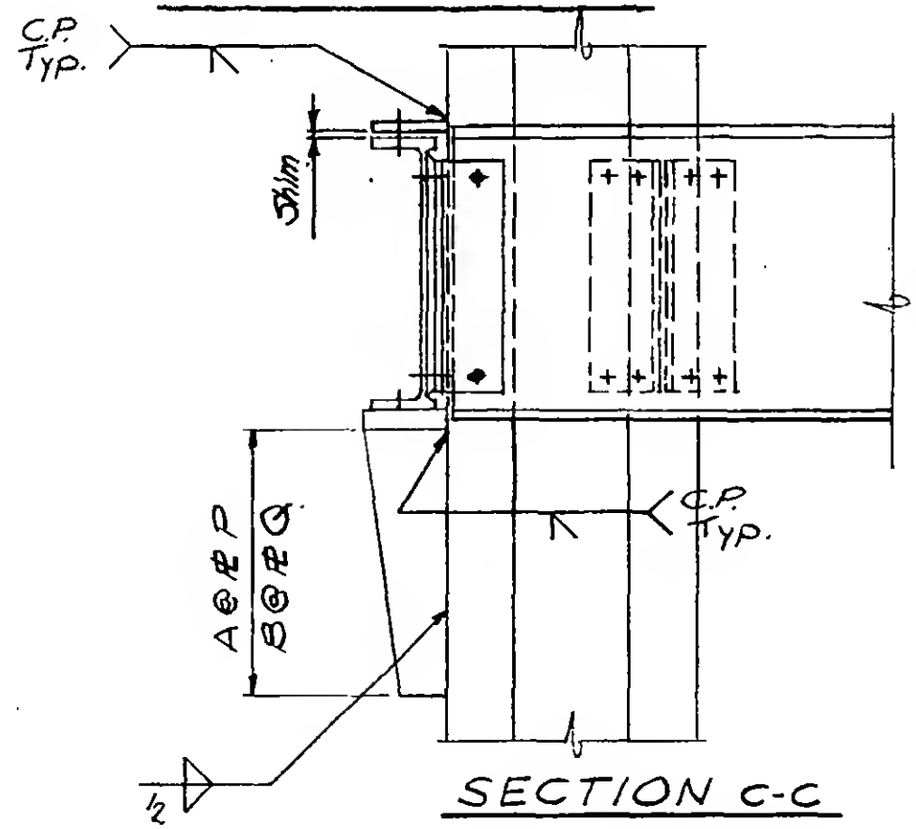

SECTION c-c

DESIGNED

DRAWN

REVIEWED

G-AB1-44.7

SKILLING - HELLE - CHRISTIANSEN - ROBERTSON Structural & Civil Engineers

PROJECT THE WORLD TRADE CENTER | TITLE SCHEDULE FOR DETAIL 237 G, H, I, J | DATE 9-18-68

REVISIONS

	237G	237H	237I	237J		
PLATES						
P	1"	1"	1"	1"		
Q	1"	1"	1"	1"		
R	1"	1"	1"	1"		
S	1"	1"	1"	1"		
T	1"	1"	1"	1"		
U	3/4"	5/8"	7/8"	7/8"		
V	1 1/2"	1 1/4"	1 1/2"	1 1/2"		
DIMENSIONS						
A	1'-0"	1'-0"	1'-0"	1'-0"		
B	1'-0"	1'-0"	1'-0"	1'-0"		
C	1'-8"	1'-8"	1'-8"	1'-8"		
D	1'-8"	1'-8"	1'-8"	1'-8"		
ANGLES						
A	—	—	—	—		
B	—	—	—	—		
BOLTS						
K	6 - 3/4" ϕ	6 - 3/4" ϕ	6 - 1" ϕ	6 - 3/4" ϕ		
L	6 - 3/4" ϕ	6 - 3/4" ϕ	6 - 1" ϕ	6 - 3/4" ϕ		
M	6 - 3/4" ϕ	6 - 3/4" ϕ	6 - 1" ϕ	6 - 3/4" ϕ		
N	—	—	—	—		
WELDS						
1	1/2	3/8	1/2	1/2		
2	1/2	3/8	1/2	1/2		
3	1/2	3/8	1/2	1/2		

LICENSED PROFESSIONAL ENGINEER LESLIE E. ROBERTSON No. 34360 UNIVERSITY OF THE STATE OF NEW YORK

6-ABI-44.8

SKILLING - HELLE - CHRISTIANSEN - ROBERTSON Structural & Civil Engineers

PROJECT THE WORLD TRADE CENTER | TITLE CONNECTION DETAIL 238 A,B,C,D | DATE 6-5-67

REVISIONS

7-5-67

7-28-67

10-2-67

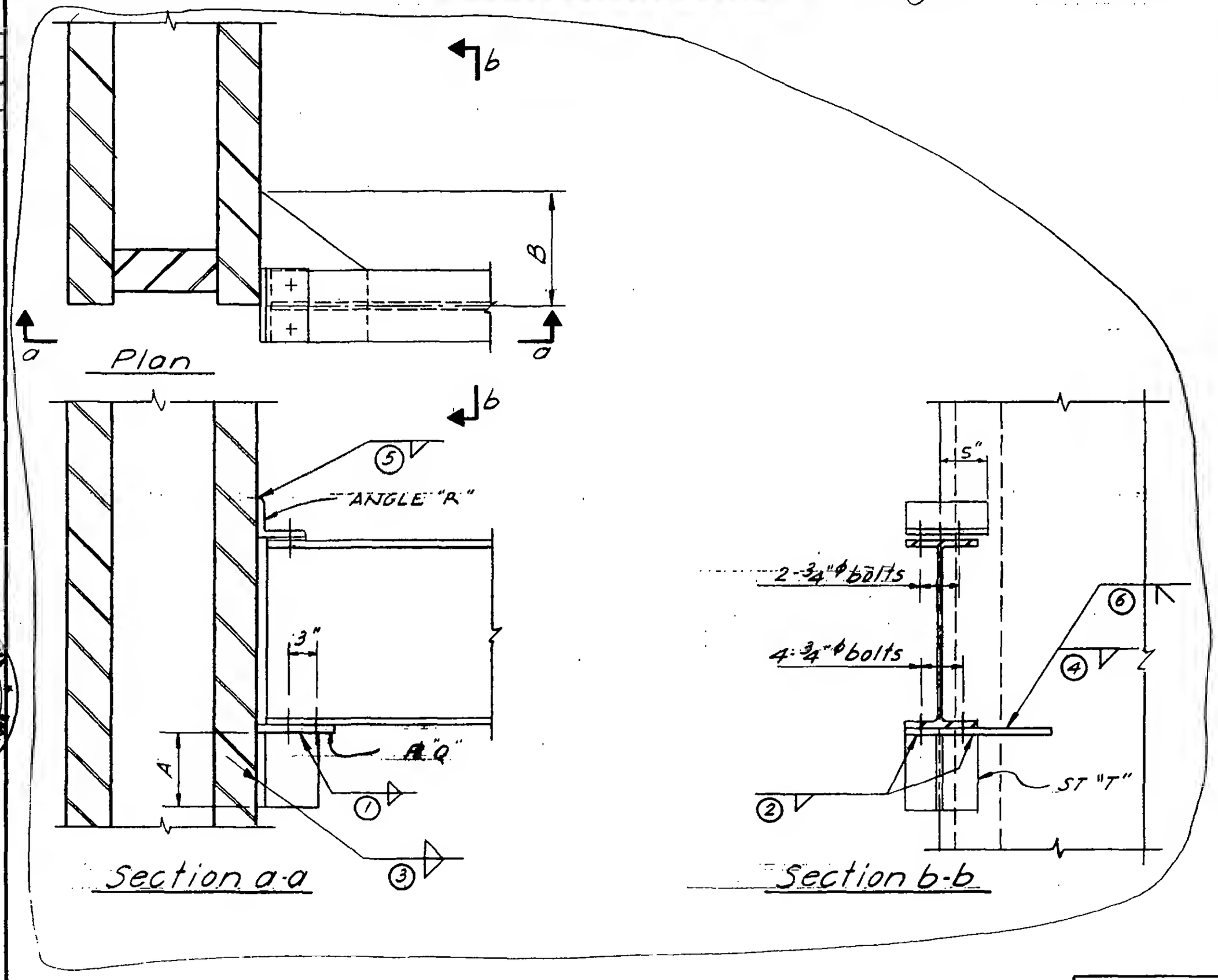

6-AB1-45

SKILLING - HELLE - CHRISTIANSEN - ROBERTSON Structural & Civil Engineers

PROJECT: THE WORLD TRADE CENTER | TITLE: SCHEDULE FOR DETAIL 238 A, B, C, D | DATE: 7-5-67

REVISIONS
7-28-67
10-2-67

	238 A & B	238 C	238 D
PLATES			
Q	3/8"	1"	3/4"
ANGLES			
R	5 x 3 x 5/16	5 x 3 x 5/16	4 x 4 x 3/8
ST T	ST 5 WF 27	ST 6 WF 60	ST 6 WF 60
DIMENSIONS			
A	0'-10"	1'-4"	1'-0"
B	0'-6½"	—	0'-6½
WELDS			
1	5/16	1/2	5/16
2	5/16	5/16	5/16
3	1/2	1/2	5/8
4	1/2	—	5/16
5	5/16	5/16	5/16
6	—	C.P.	—

LICENSED PROFESSIONAL ENGINEER
LESLIE E. ROBERTSON
No. 34360
UNIVERSITY OF THE STATE OF NEW YORK

6-AB1-45.1

SKILLING - HELLE - CHRISTIANSEN - ROBERTSON — Structural & Civil Engineers

PROJECT: THE WORLD TRADE CENTER | TITLE: CONNECTION DETAIL 240 A | DATE: 6-5-67

REVISIONS

10-2-67

All bolts - ¾"ϕ

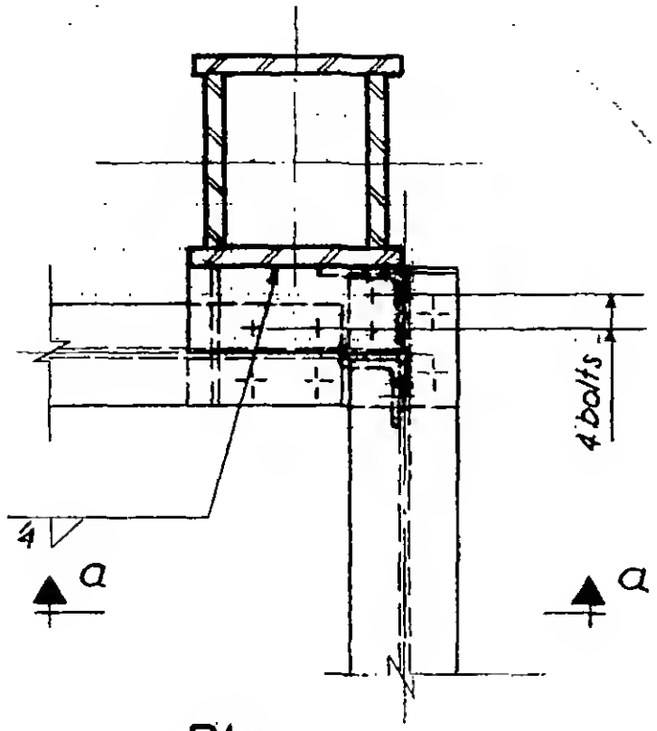

Plan

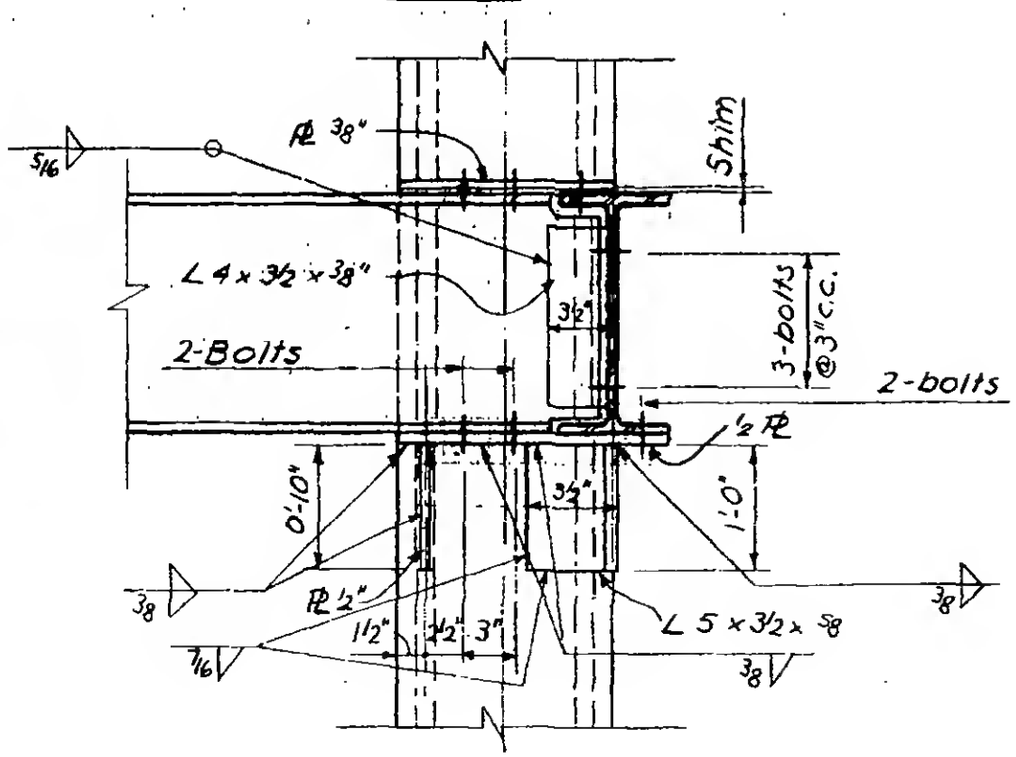

Section a-a

LICENSED PROFESSIONAL ENGINEER
LESLIE E. ROBERTSON
No. 34360
UNIVERSITY OF THE STATE OF NEW YORK

6-AB1-46

WORTHINGTON, SKILLING, HELLE & JACKSON — Civil & Structural Engineers

PROJECT	TITLE	DATE
THE WORLD TRADE CENTER	CONNECTION DETAIL 24T A	6-30-67

REVISIONS

10-5-67

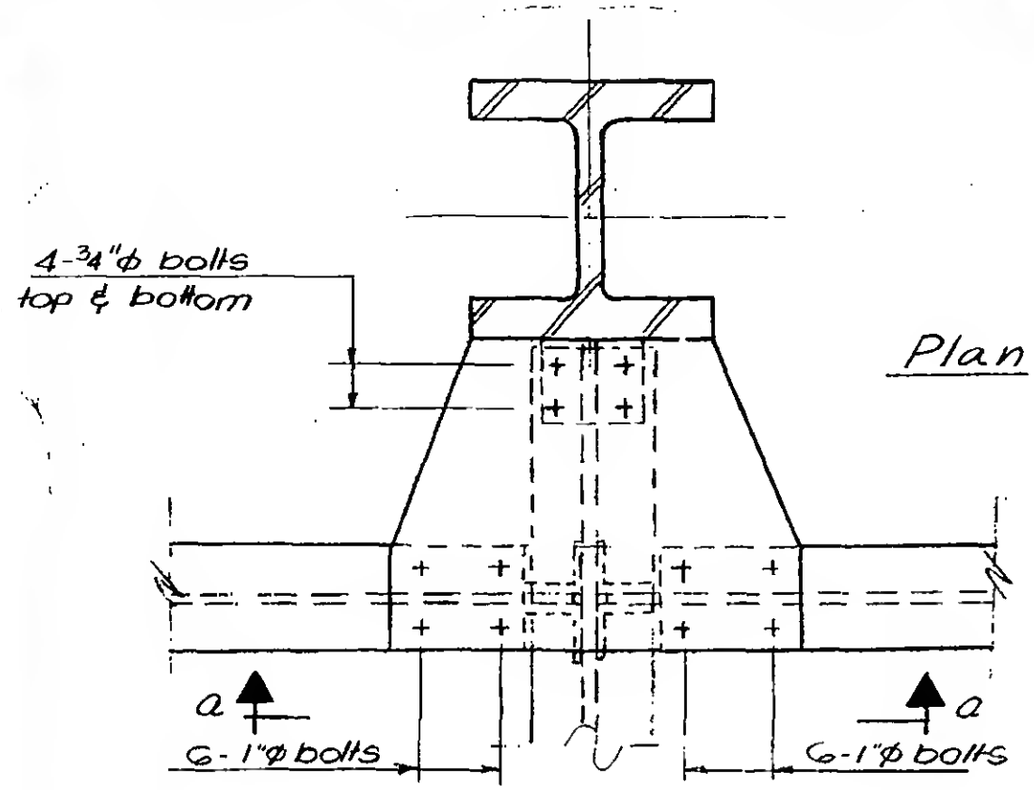

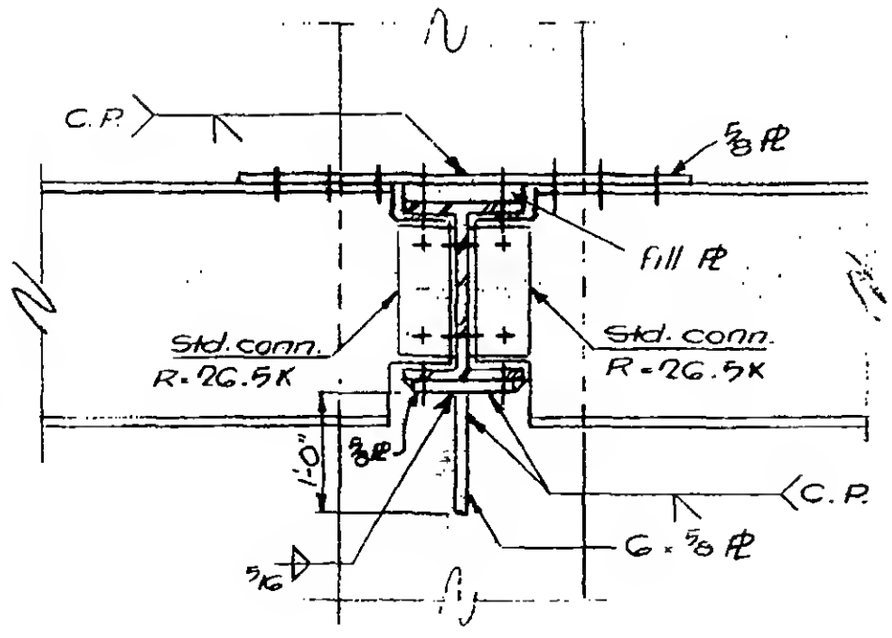

SECTION a-a

LICENSED PROFESSIONAL ENGINEER
LESLIE E. ROBERTSON
No. 34360
UNIVERSITY OF THE STATE OF NEW YORK

6-ABI-47

WORTHINGTON, SKILLING, HELLE & JACKSON — Civil & Structural Engineers

PROJECT	TITLE	DATE
THE WORLD TRADE CENTER	CONNECTION DETAIL 242 (A, B)	6-30-67

REVISIONS

10-5-67

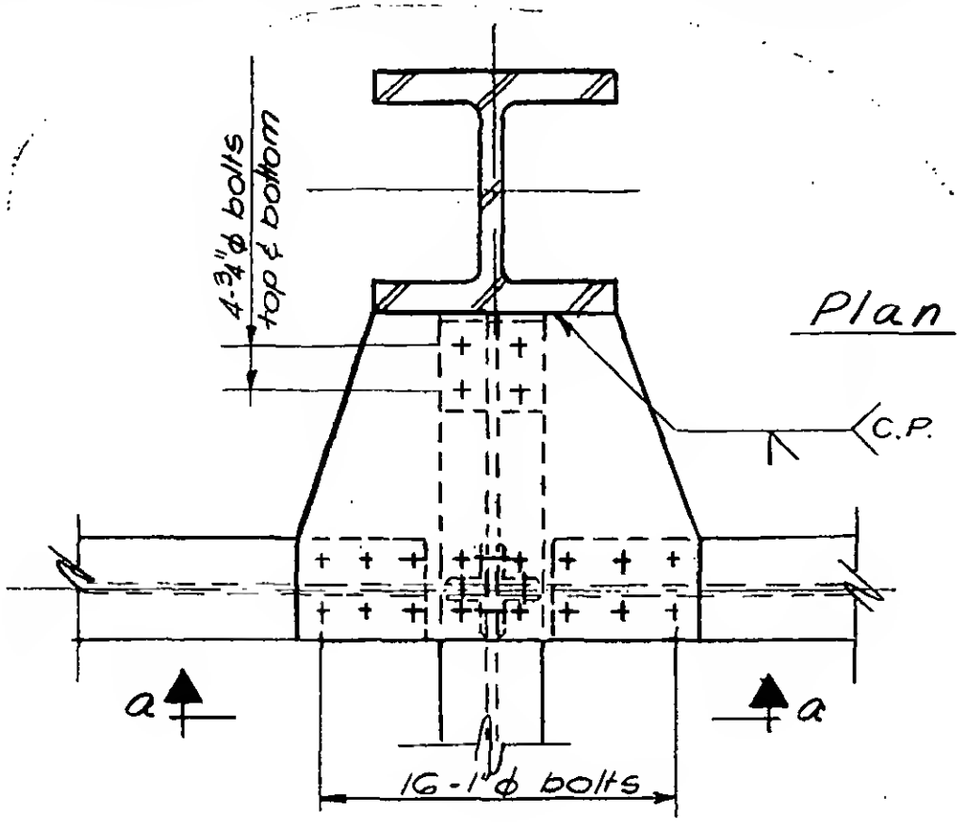

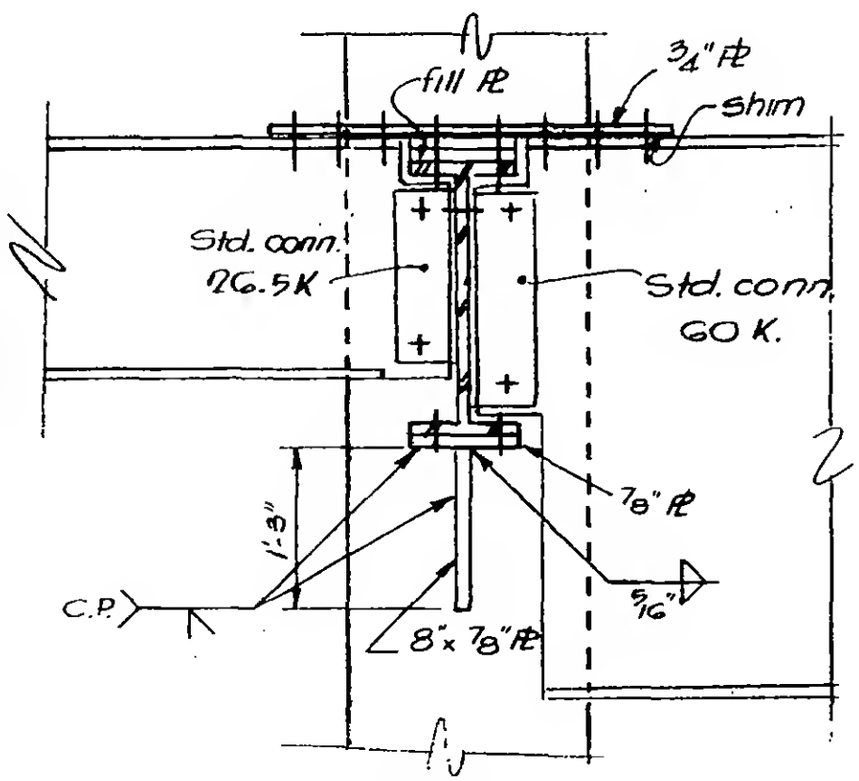

SECTION a-a

LICENSED PROFESSIONAL ENGINEER
LESLIE E. ROBERTSON
No. 34360
UNIVERSITY OF THE STATE OF NEW YORK

G-AB1-48

WORTHINGTON, SKILLING, HELLE & JACKSON — Civil & Structural Engineers

PROJECT: THE WORLD TRADE CENTER | TITLE: CONNECTION DETAIL 243 A, B, & C | DATE: 6-30-[illegible]

REVISIONS
10-5-67
11-23-67
5-6-68

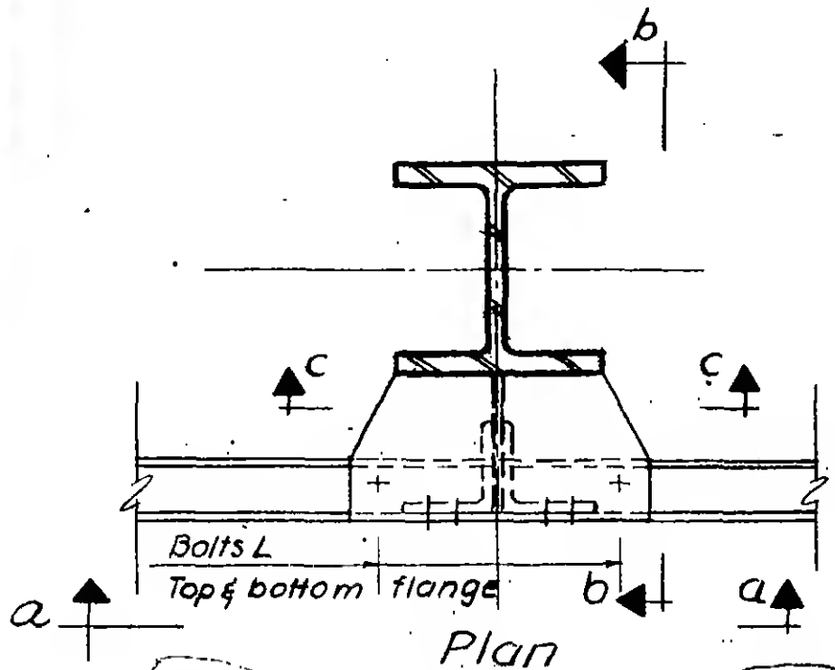

Plan

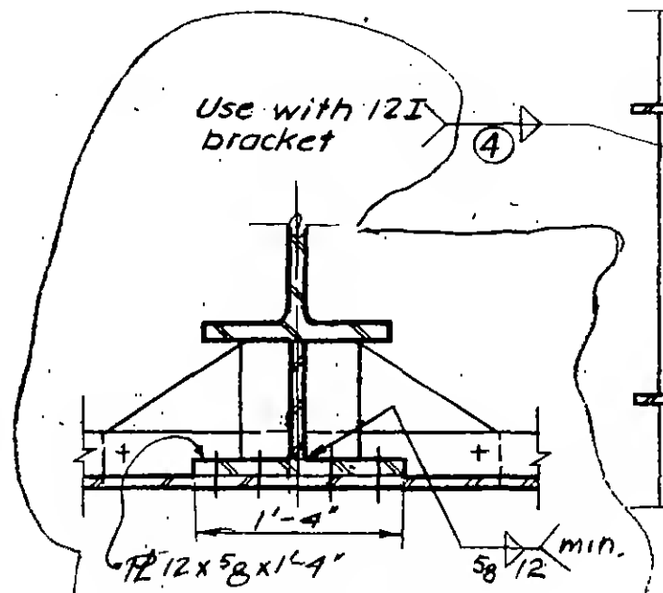

Alternate Conn. for 243 A, B, & C

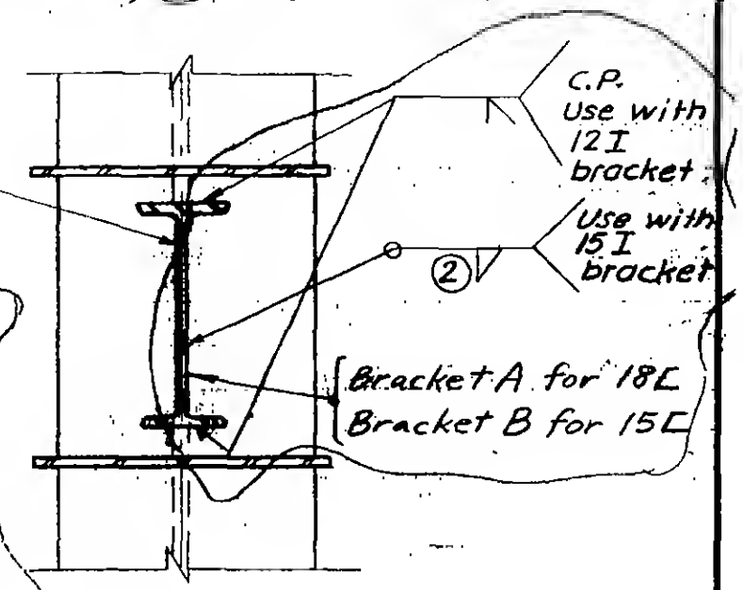

Section c-c

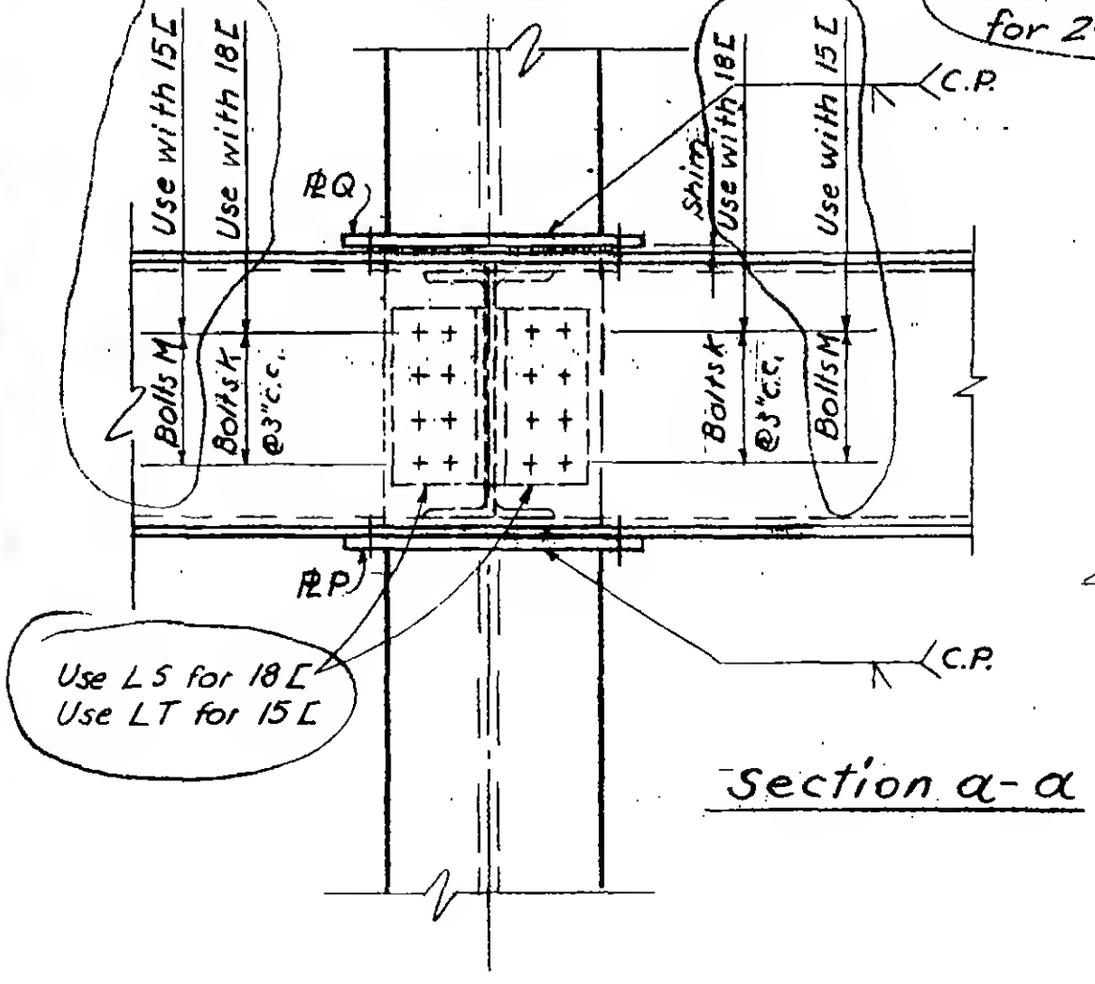

Section a-a

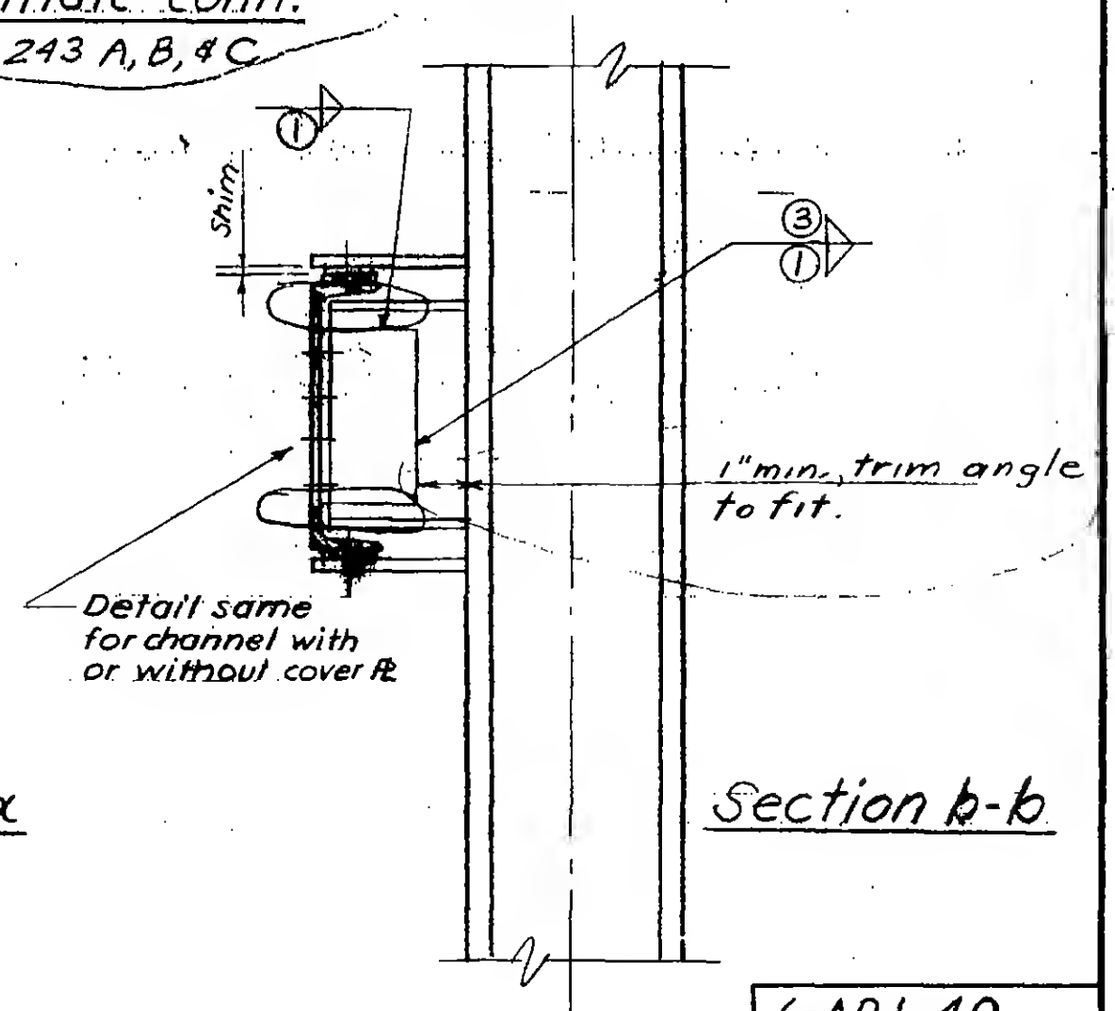

Section b-b

6-AB1-49

SKILLING - HELLE - CHRISTIANSEN - ROBERTSON Structural & Civil Engineers

PROJECT: THE WORLD TRADE CENTER | TITLE: SCHEDULE FOR DETAIL 243 A, B, C | DATE: 10-5-67

REVISIONS
11-23-67
5-6-68

	243 A	243 B	243 C
PLATES			
P	3/4"	5/8"	3/4"
Q	3/4"	5/8"	3/4"
BRACKET A	PC 15 I 50	PC 15 I 50	PC 15 I 50
B	PC 12 I 50	PC 12 I 50	PC 12 I 50, Fy-50
ANGLES			
S	6 x 6 x 5/8 x 1'-0"	6 x 4 x 3/8 x 1'-0"	8 x 6 x 3/4 x 1'-0"
T	8 x 8 x 5/8 x 0'-9"	8 x 4 x 1/2 x 0'-9"	8 x 6 x 3/4 x 0'-9"
BOLTS			
K	8 - 7/8" φ	8 - 3/4" φ	8 - 1" φ
L	8 - 1" φ	6 - 1" φ	8 - 1" φ
M	6 - 1" φ	6 - 7/8" φ	6 - 1" φ A490
WELDS			
1	9/16	5/16	9/16
2	9/16	3/8	9/16
3	—	—	1/4
4	5/8	1/2	5/8

LICENSED PROFESSIONAL ENGINEER LESLIE E. ROBERTS No. 24360 UNIVERSITY OF THE STATE OF NEW YORK

6-AB1-49.1

WORTHINGTON, SKILLING, HELLE & JACKSON — Civil & Structural Engineers

PROJECT: THE WORLD TRADE CENTER | TITLE: CONNECTION DETAIL 244A, B | DATE: 6-5-67

REVISIONS

10-2-67
9-25-68

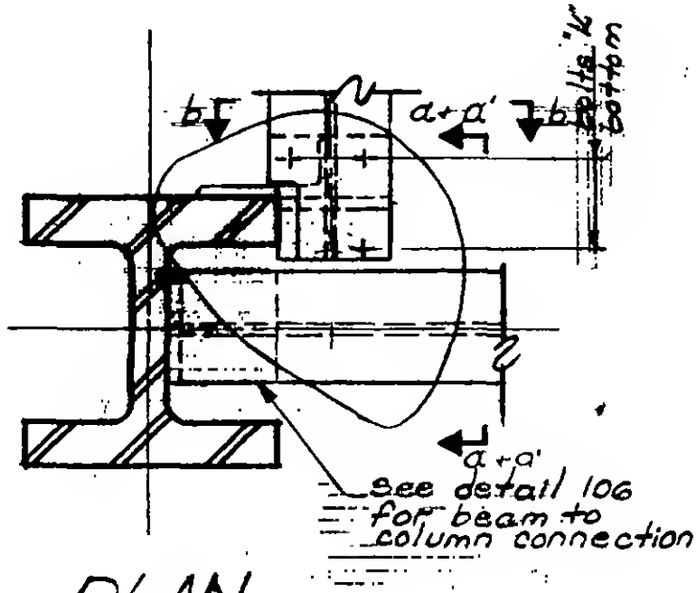

PLAN

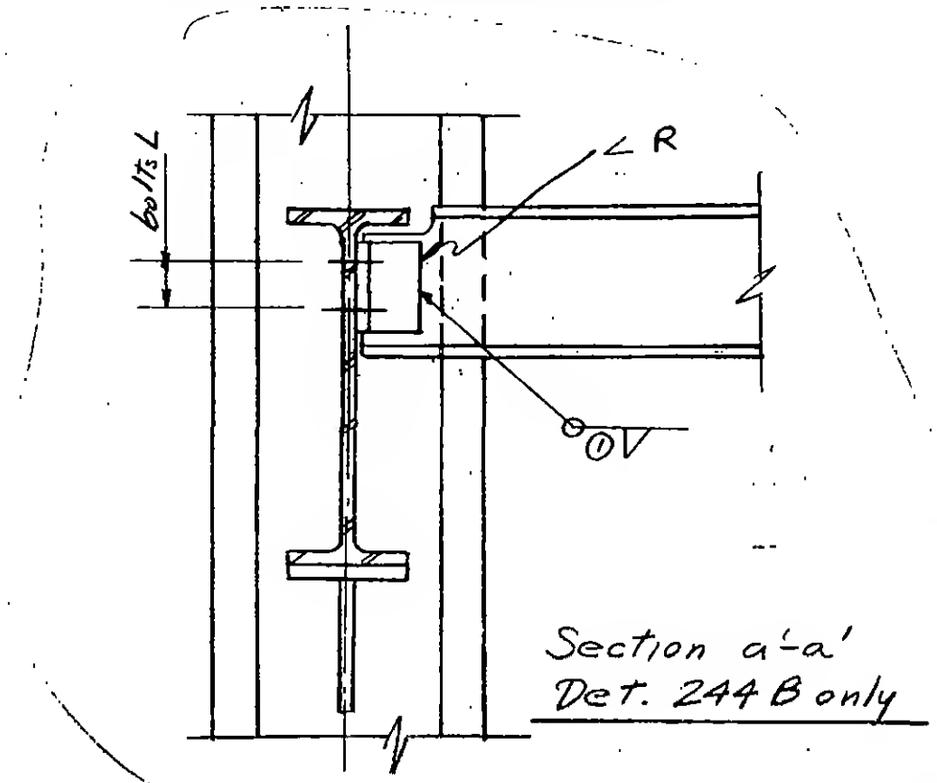

Section a'-a'
Det. 244 B only

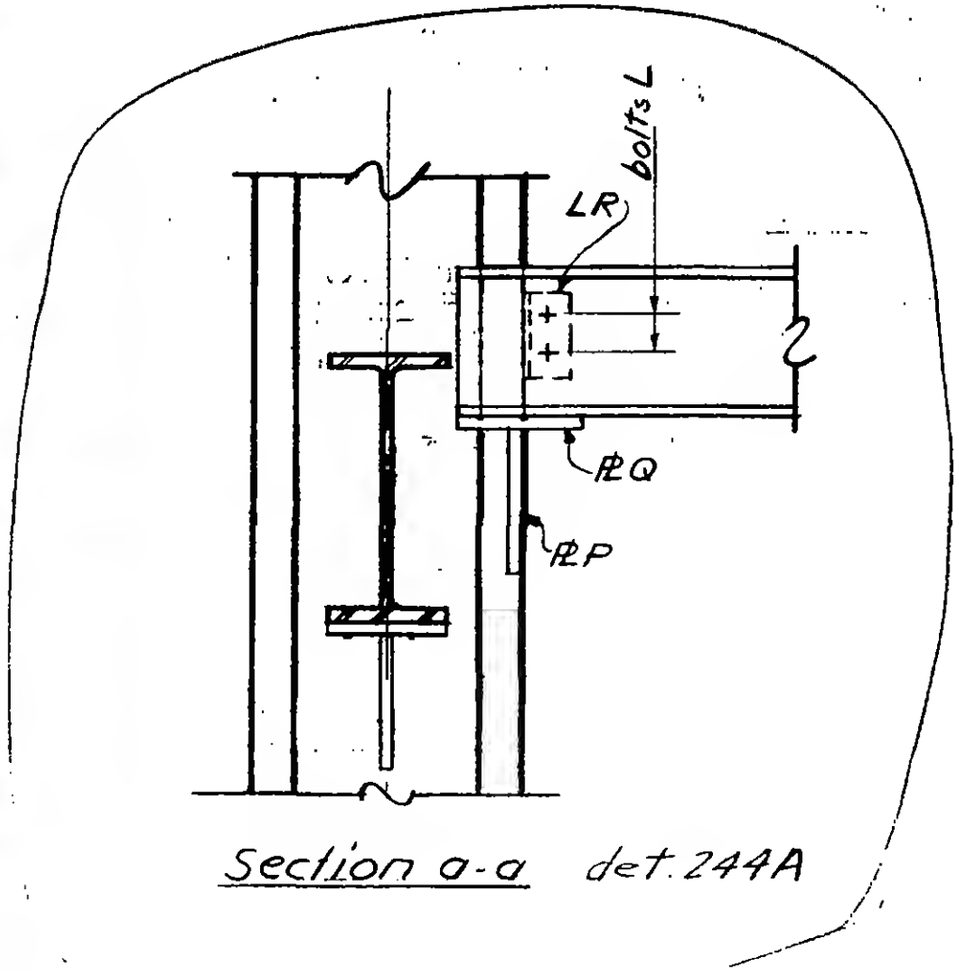

Section a-a det. 244A

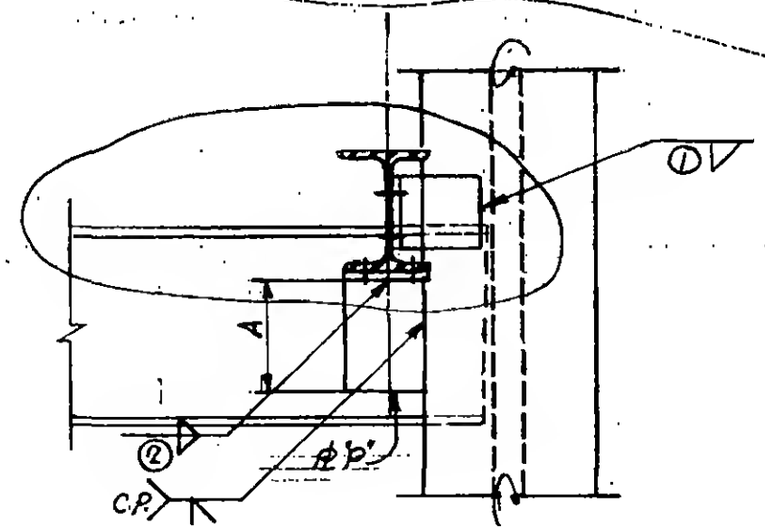

Section b-b det. 244A

6-ABI-50

SKILLING - HELLE - CHRISTIANSEN - ROBERTSON Structural & Civil Engineers

PROJECT: THE WORLD TRADE CENTER | TITLE: SCHEDULE FOR DETAIL 244 A,B | DATE: 10-2-67

REVISIONS

	244 A	244 B				
PLATE						
P	1/2"	—				
Q	1/2"	—				
ANGLE						
R	4 × 3 1/2 × 5/16	4 × 3 1/2 × 3/8				
DIMENSION						
A	0'-11"	—				
BOLTS						
K	3-3/4" ϕ	—				
L	2-3/4" ϕ	4-7/8" ϕ				
WELDS						
①	1/4	5/16				
②	5/16	—				

LICENSED PROFESSIONAL ENGINEER LESLIE E. ROBERTSON No. 34360 UNIVERSITY OF THE STATE OF NEW YORK

6-AB1-50.1

WORTHINGTON, SKILLING, HELLE & JACKSON — Civil & Structural Engineers

PROJECT: THE WORLD TRADE CENTER | TITLE: CONNECTION DETAIL 245 A,B,C,D | DATE: 5-9-67

REVISIONS
7-28-67
8-5-67
9-15-67
11-10-67

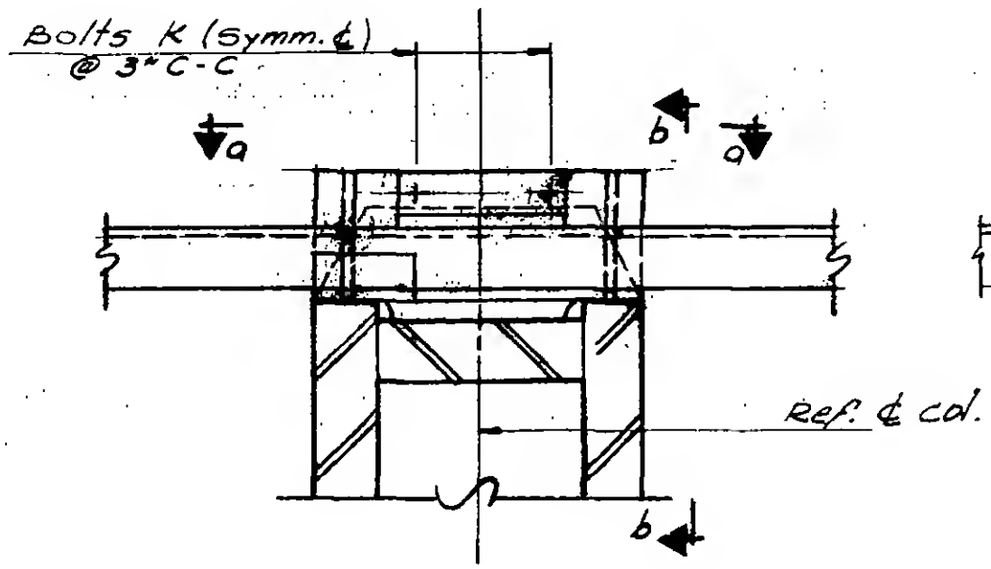

PLAN

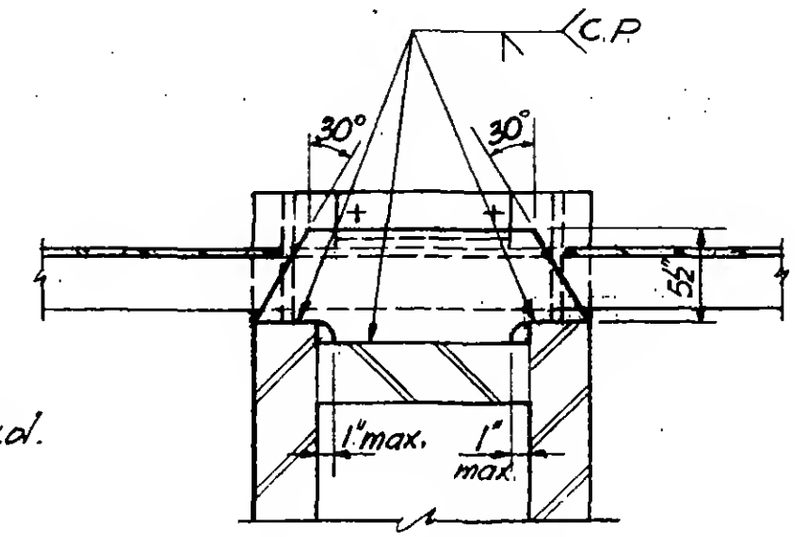

Section c-c
Detail 245 A only

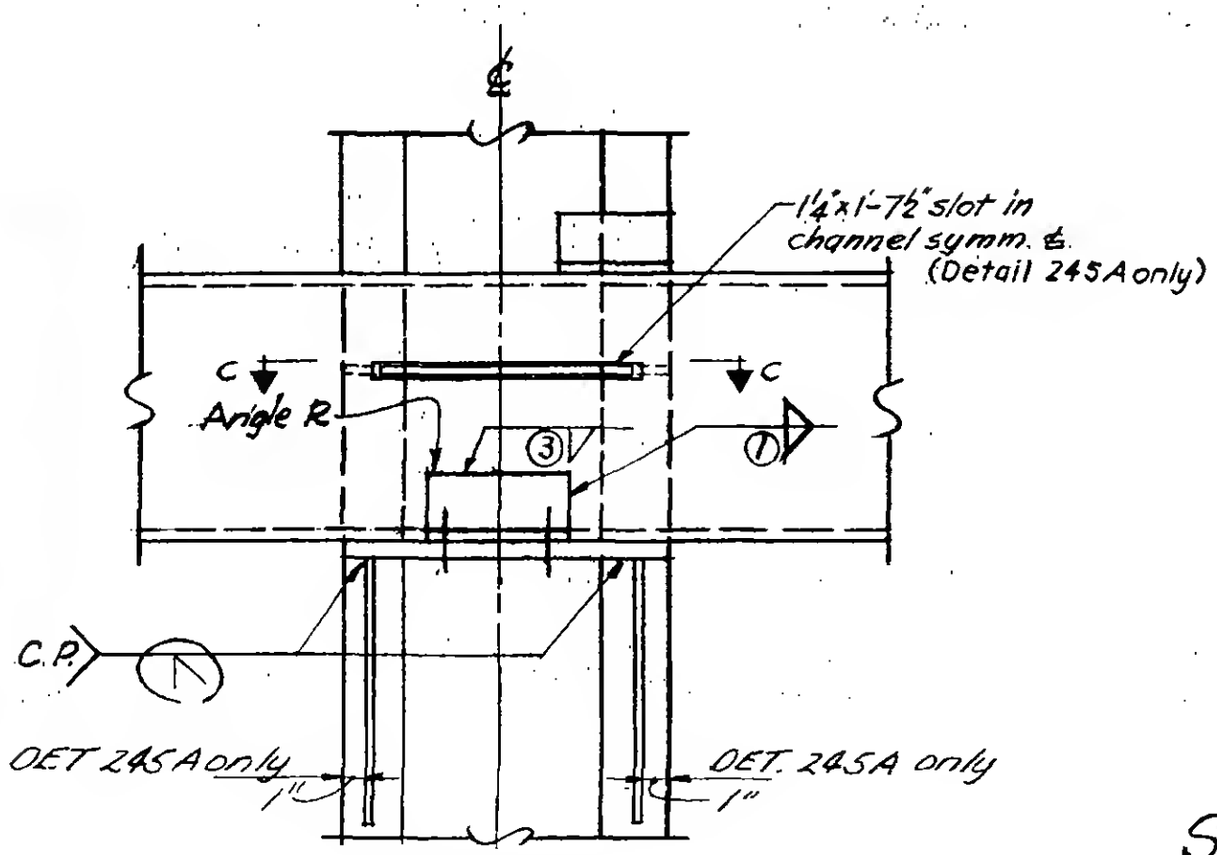

Section a-a

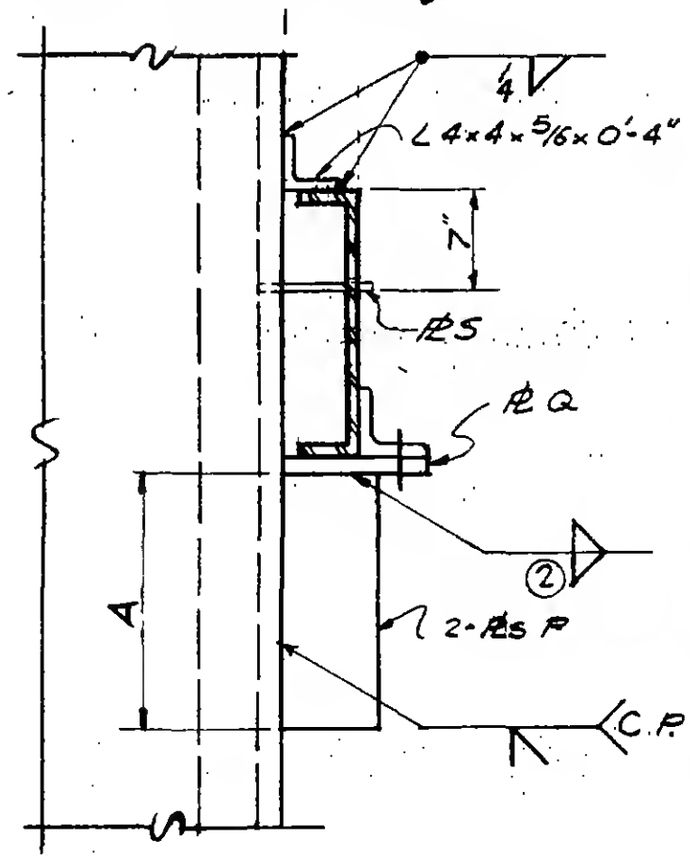

Section b-b

6-AB1-51

SKILLING - HELLE - CHRISTIANSEN - ROBERTSON Structural & Civil Engineers

PROJECT: THE WORLD TRADE CENTER

TITLE: SCHEDULE FOR DETAIL 245 A, B, C, D, E, F

DATE: 7-28-67

REVISIONS

8-5-67
9-15-67
10-5-67

	245 A	245 B	245 C	245 D	245 E	245 F
PLATES						
P	7" x 1/2"	7" x 3/4"	7" x 3/4"	7" x 5/8"	6' x 5/8"	6' x 3/4"
Q	1"	3/4"	1"	1"	3/4"	3/4"
S	7/8"	—	—	—	—	—
ANGLES						
R	3 1/2 x 3 1/2 x 3/8	3 x 3 x 5/16	3 1/2 x 3 1/2 x 3/8	3 1/2 x 3 1/2 x 3/8	—	—
DIMENSIONS						
A	1'-4"	1'-5"	1'-3"	1'-1"	1'-1"	1'-5"
BOLTS						
K	5 - 1" ϕ	3 - 3/4" ϕ	5 - 1" ϕ	4 - 3/4" ϕ	2 - 3/4" ϕ	2 - 3/4" ϕ
WELDS						
1	5/16	1/4	1/4	1/4	—	—
2	5/16	5/16	5/16	5/16	—	—
3	—	—	1/4	1/4	—	—

6-ABI-511

SKILLING - HELLE - CHRISTIANSEN - ROBERTSON — Structural & Civil Engineers

PROJECT: THE WORLD TRADE CENTER | TITLE: CONNECTION DETAIL 247 E, F, G | DATE: 10-3-67

REVISIONS

11-23-67

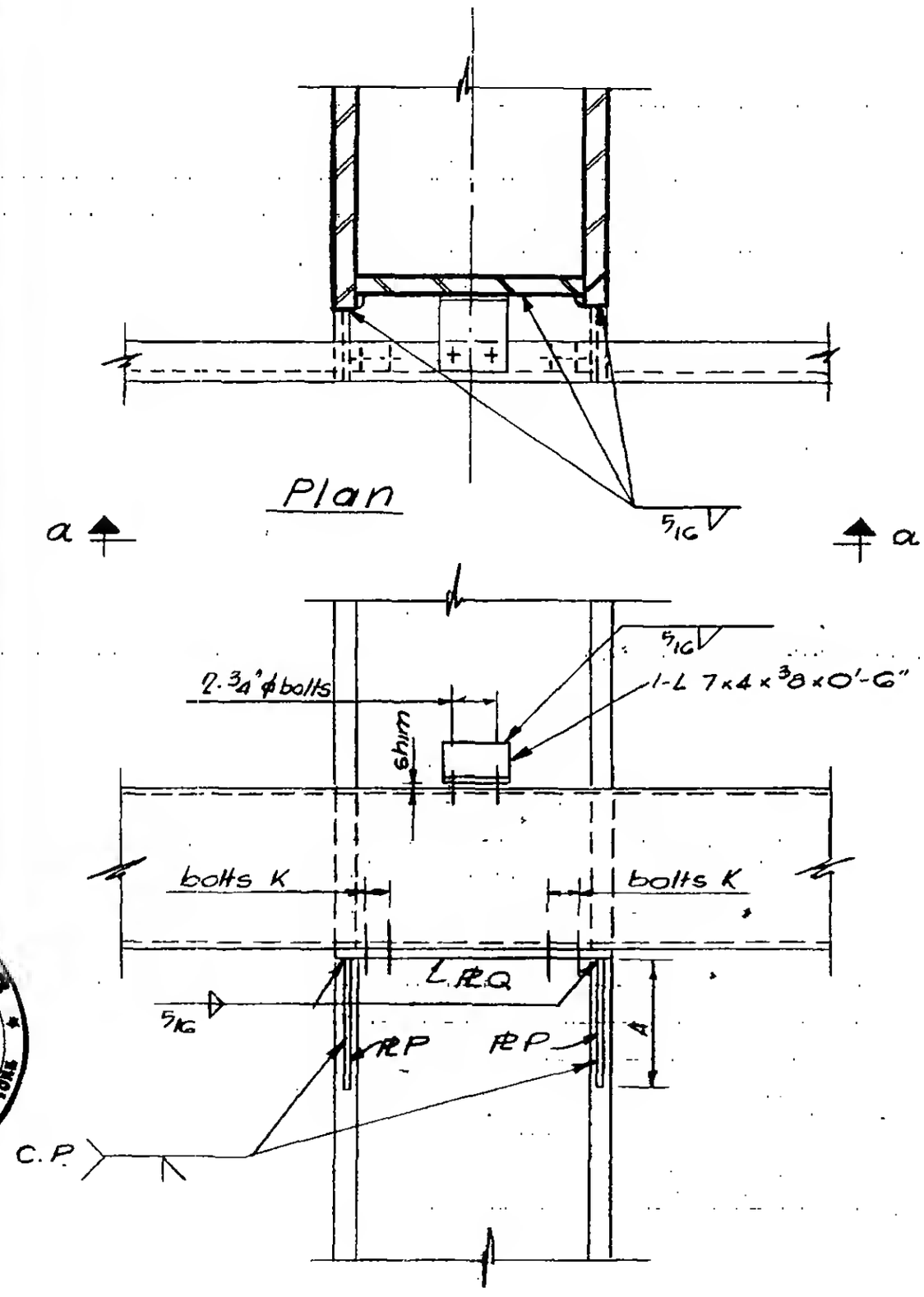

LICENSED PROFESSIONAL ENGINEER
LESLIE E. ROBERTSON
No. 34360
UNIVERSITY OF THE STATE OF NEW YORK

6-AB1-51.2

SKILLING - HELLE - CHRISTIANSEN - ROBERTSON Structural & Civil Engineers

PROJECT THE WORLD TRADE CENTER | TITLE SCHEDULE FOR DETAIL 245 G | DATE 11-23-67

REVISIONS

	245 G
PLATES	
P	5/8
Q	5/8
DIMENSIONS	
A	1'-2"
BOLTS	
K	2-3/4" ϕ

6-AB1-51.3

SKILLING - HELLE - CHRISTIANSEN - ROBERTSON Structural & Civil Engineers

PROJECT: THE WORLD TRADE CENTER | TITLE: CONNECTION DETAIL 246 A,B,C,D | DATE: 3-29-67

REVISIONS
7-28-67
8-14-67
9-15-67
10-3-67
10-31-67
11-23-67

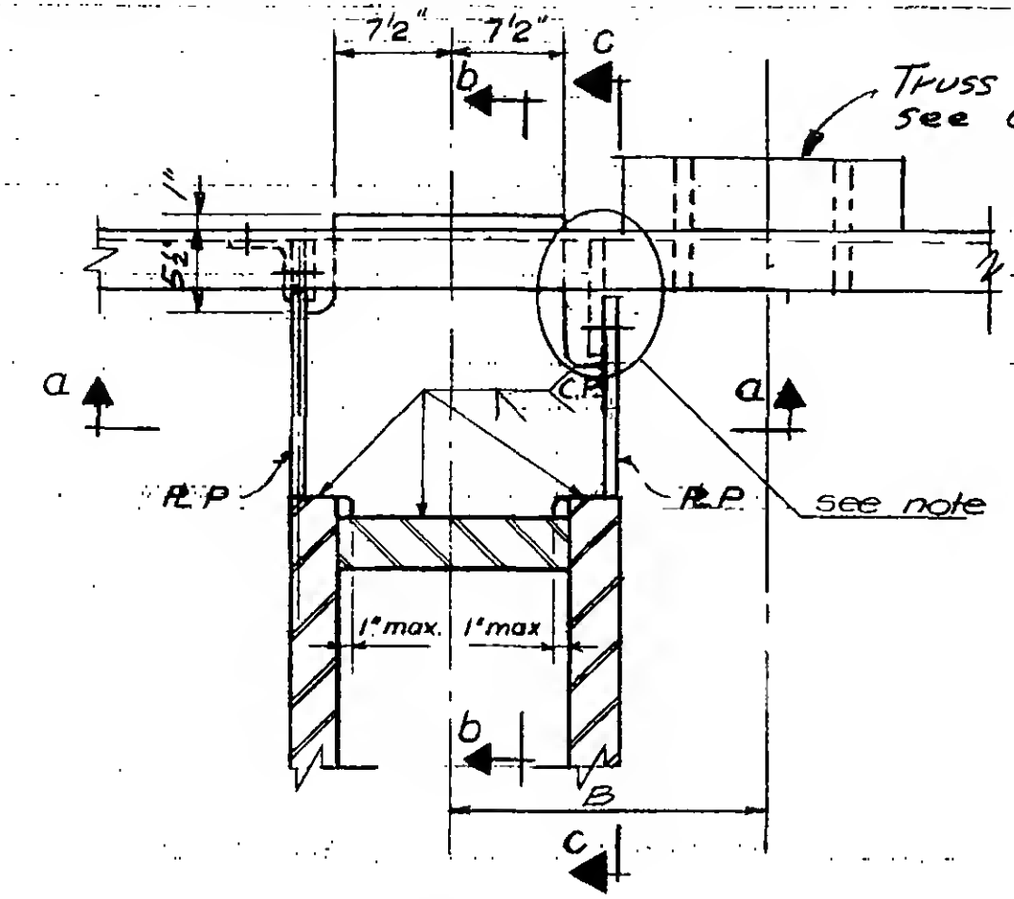

Plan

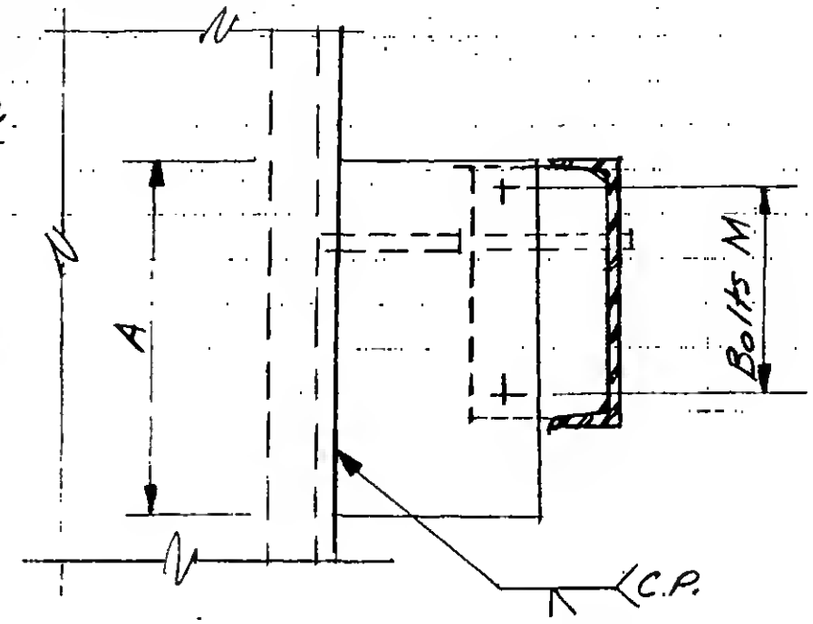

Section c-c

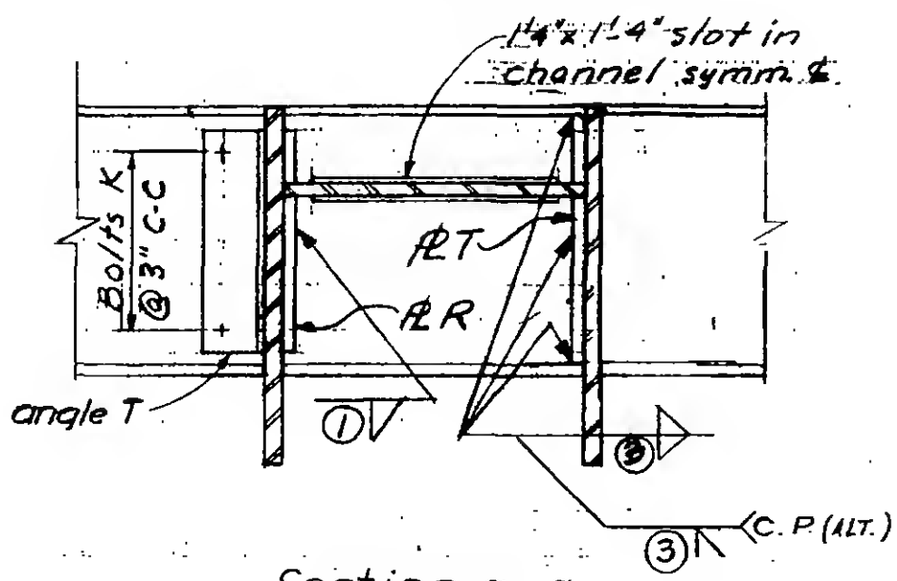

Section a-a

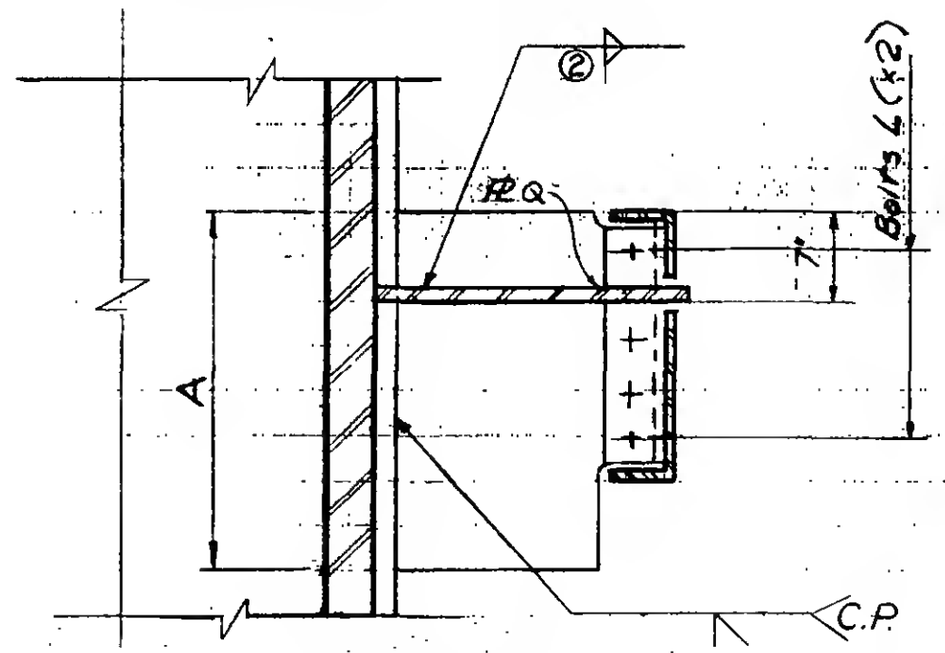

Section b-b

Note: Use plan & section c-c as shown for detailing only if dimension B = 1'-5" or less, otherwise detail is symetrical to other side of plan.

6-AB1-52

LICENSED PROFESSIONAL ENGINEER
LESLIE E. ROBERTSON
No. 34360
UNIVERSITY OF THE STATE OF NEW YORK

SKILLING - HELLE - CHRISTIANSEN - ROBERTSON Structural & Civil Engineers

PROJECT: THE WORLD TRADE CENTER

TITLE: SCHEDULE FOR DETAIL 246 A, B, C, D

DATE: 7-28-67

REVISIONS
8-14-67
9-15-67
10-3-67
10-31-67
11-10-67
11-23-67

	246A	246B	246C	246D
PLATE				
P	1 1/8"	7/8"	7/8"	1 1/8"
Q	7/8"	3/4"	1"	1"
R	1/2"	3/8	3/8"	5/8"
T	1"	1"	1"	1"
DIMENSIONS				
A	1'-6"	1'-8"	2'-0"	2'-0"
ANGLES				
T	4" x 3 1/2" x 5/16	4" x 3 1/2 x 5/16	4 x 3 1/2" x 5/16	4 x 3 1/2 x 3/8
BOLTS				
K	4 - 3/4" ϕ	4 - 3/4" ϕ	4 - 3/4" ϕ	4 - 7/8" ϕ
L	4 - 3/4" ϕ	4 - 3/4" ϕ	4 - 3/4" ϕ	4 - 7/8" ϕ
M	5 - 1 1/8" ϕ (A490)	5 - 1 1/8" ϕ (A490)	5 - 1 1/8" ϕ (A490)	5 - 1 1/8" ϕ A490
WELDS				
1	7/16	7/16	7/16	12
2	3/8	3/8	3/8	5/16
3	5/16 or C.P.	5/16 or C.P.	5/16 or C.P.	C.P.

LICENSED PROFESSIONAL ENGINEER
LESLIE E. ROBERTSON
No. 34360
UNIVERSITY OF THE STATE OF NEW YORK

6-AB1-52.1

SKILLING - HELLE - CHRISTIANSEN - ROBERTSON Structural & Civil Engineers

PROJECT: THE WORLD TRADE CENTER | TITLE: CONNECTION DETAIL 246 E | DATE: 11-29-67

REVISIONS

12-21-67
1-24-68

Note: Use plan as shown for detailing only if dimension B = 1'-5" or less, otherwise detail is symetrical to other side of plan.

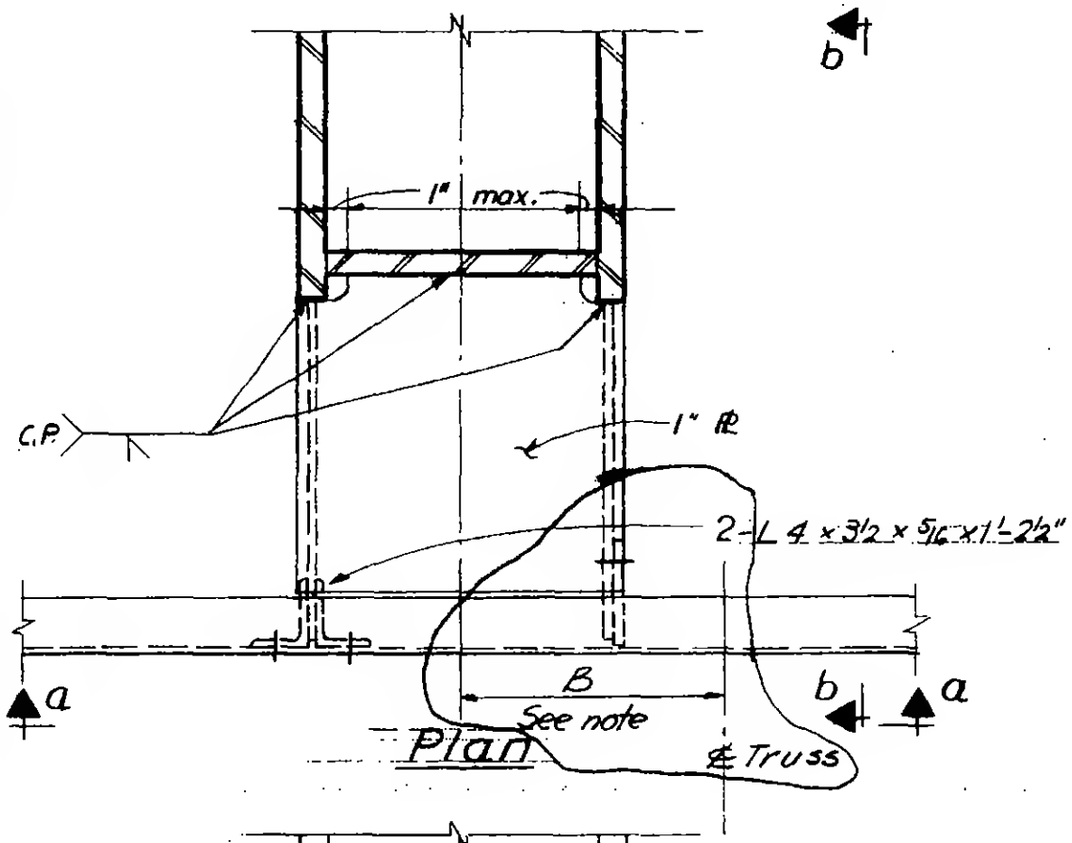

Plan

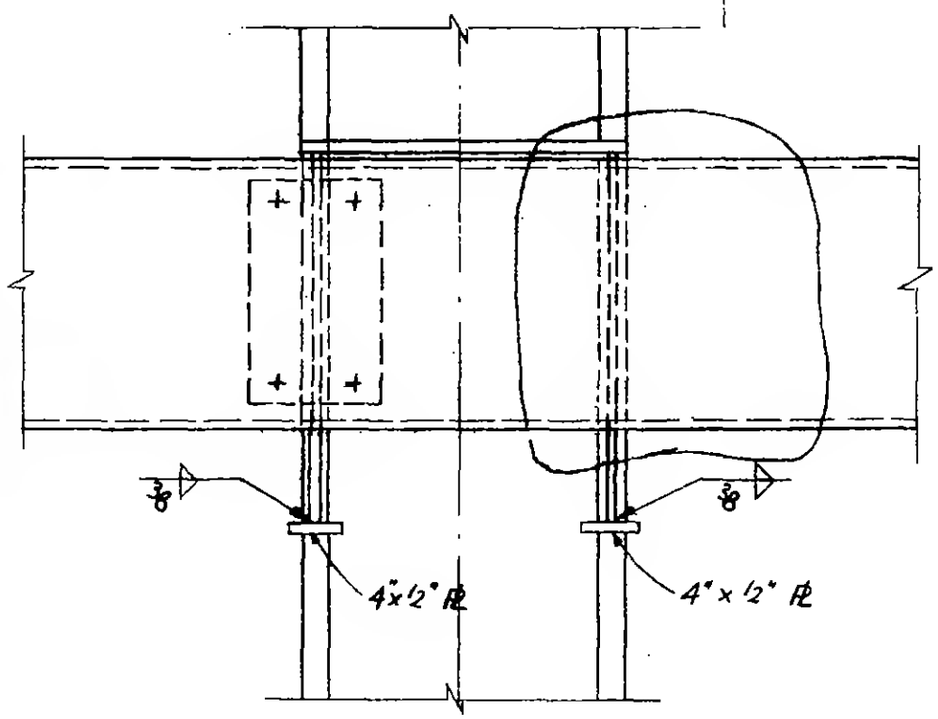

Section a-a

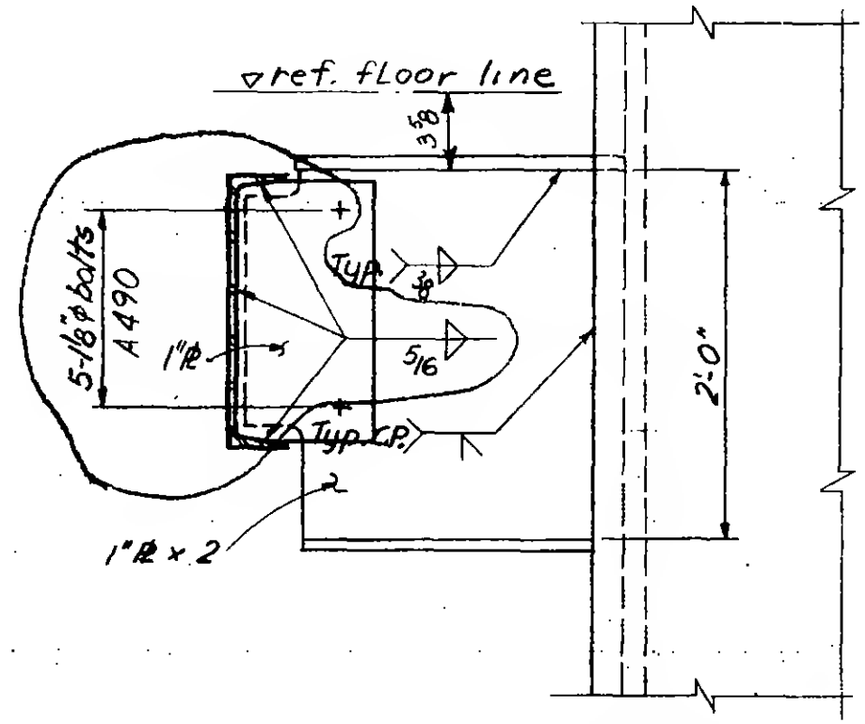

Section b-b

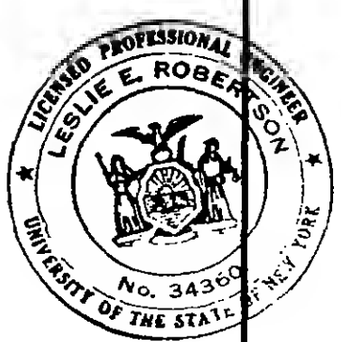

6-AB1-52.2

SKILLING - HELLE - CHRISTIANSEN - ROBERTSON Structural & Civil Engineers

PROJECT: THE WORLD TRADE CENTER | TITLE: CONNECTION DETAIL 247 A-G | DATE: 5-9-67

REVISIONS

-28-67
8-5-67
9-15-67
11-14-67
12-7-67
12-21-67

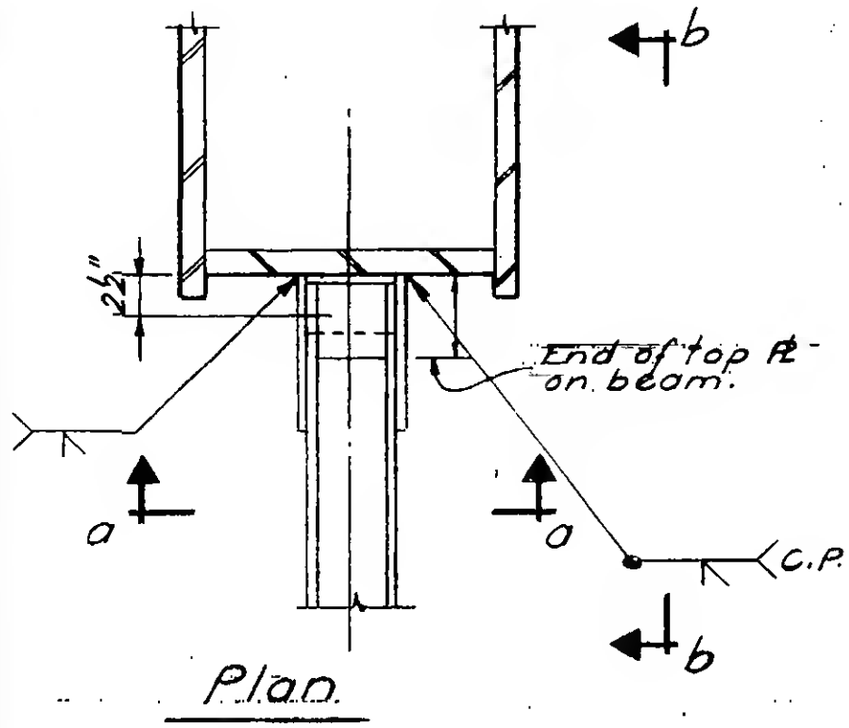

Plan.

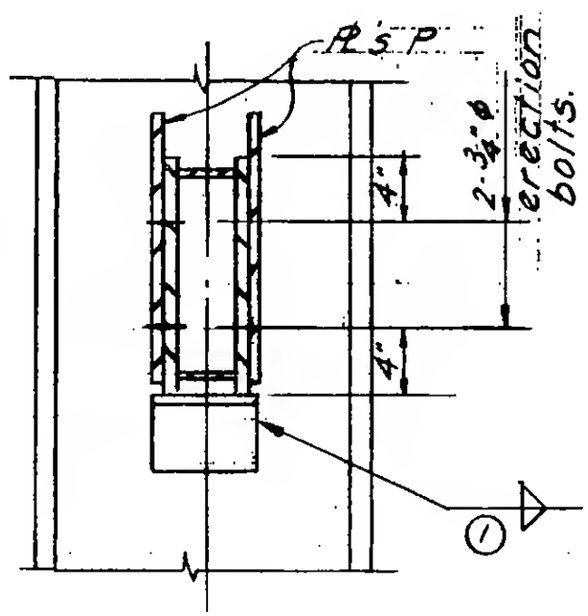

Section a-a

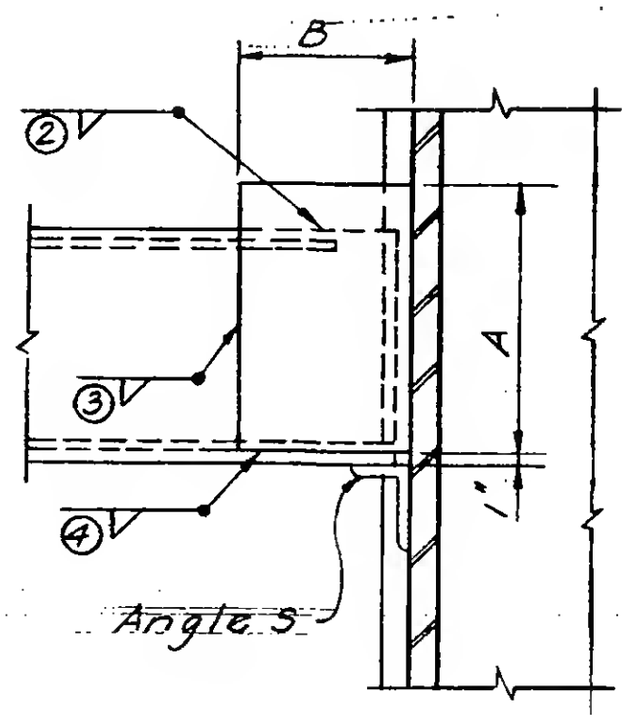

Section b-b

6-AB1-53

LICENSED PROFESSIONAL ENGINEER
LESLIE E. ROBERTSON
No. 34360
UNIVERSITY OF THE STATE OF NEW YORK

SKILLING - HELLE - CHRISTIANSEN - ROBERTSON Structural & Civil Engineers

PROJECT: THE WORLD TRADE CENTER | TITLE: CONNECTION DETAIL 247 A,C,E,G | DATE: 12-21-67

REVISIONS

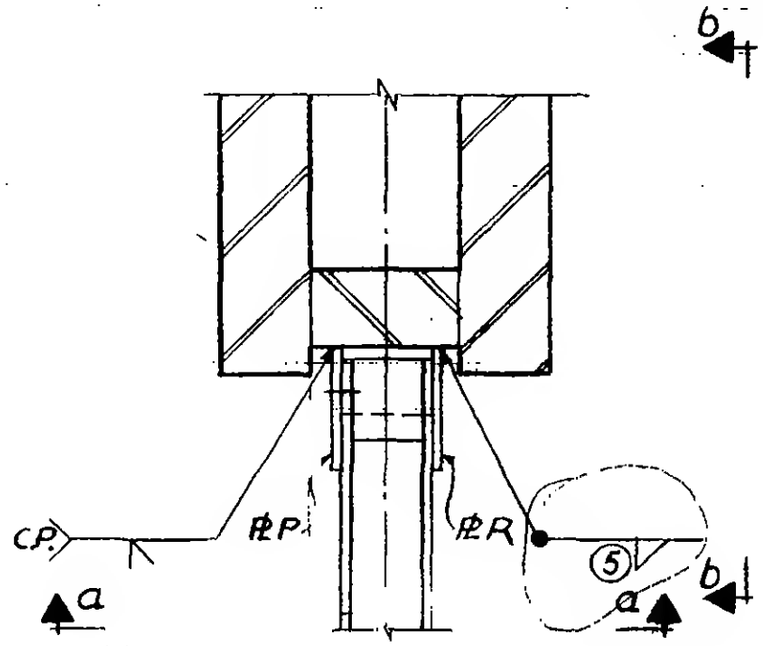

Plan A,C,E,G

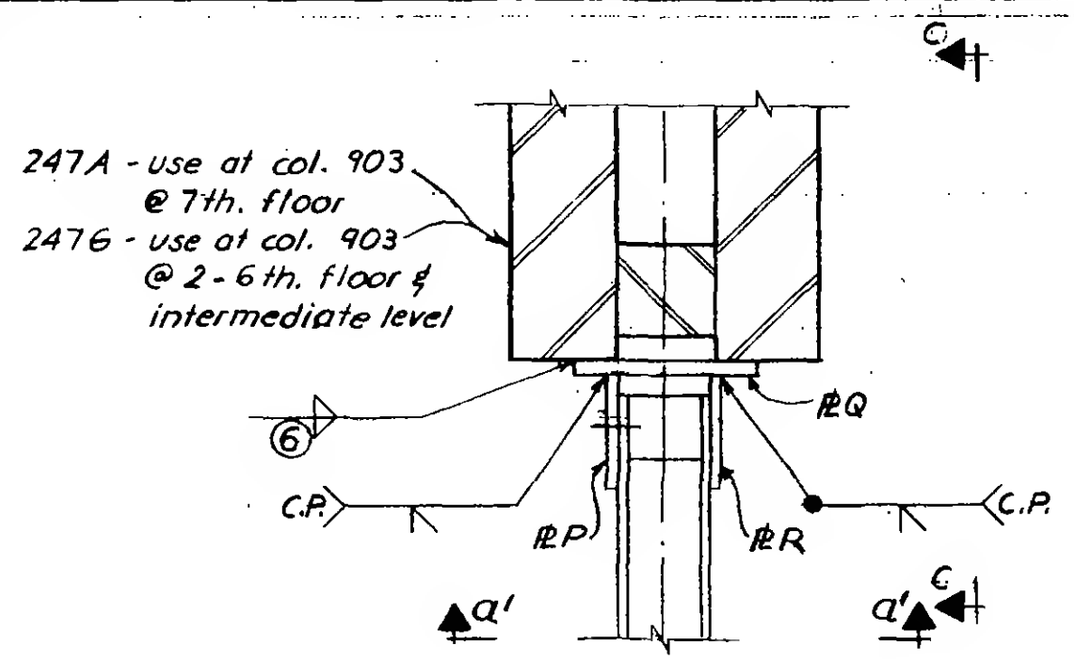

Plan A,G Alt.
use where indicated

Center ℄ P as shown for ℄ R unless previously approved for fabrication or for 247G.

Remove erection seat on columns approved for fabrication if necessary to clear ℄ P.

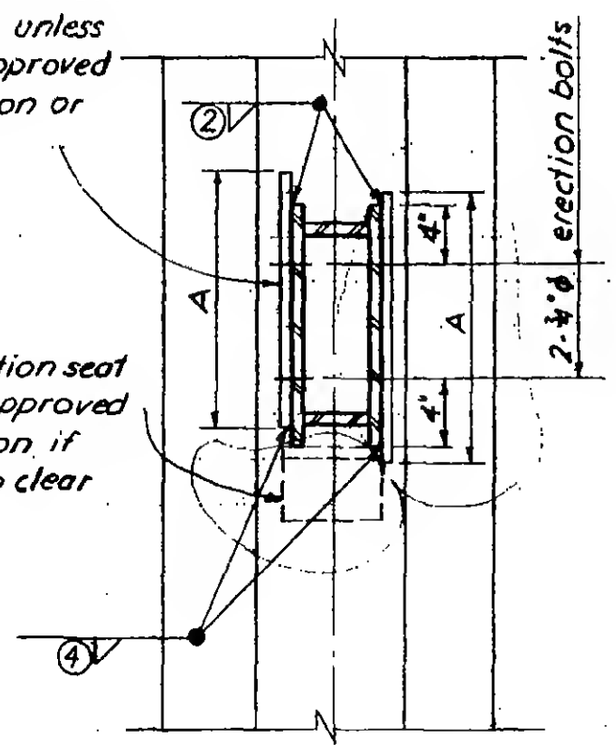

Section a-a
(a'-a' similar)

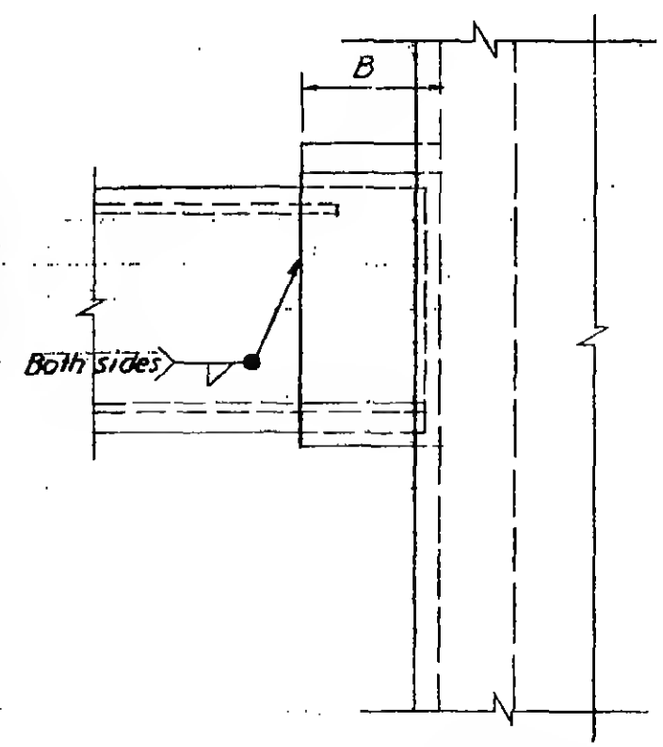

Section b-b

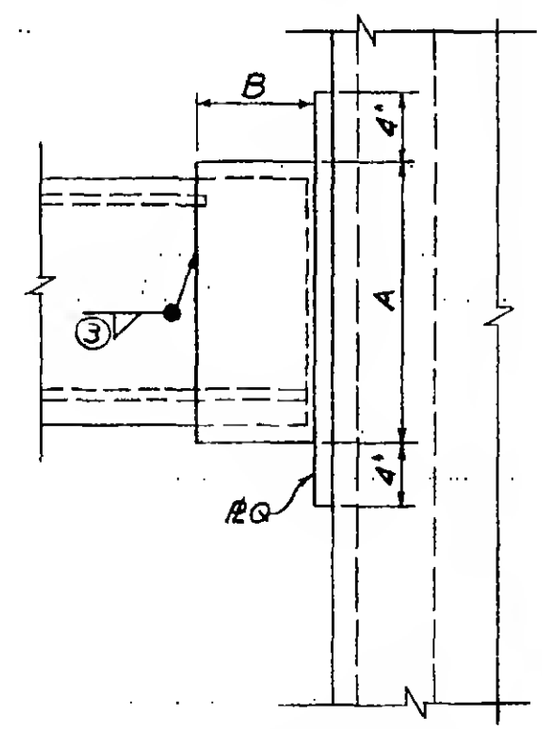

Section c-c

6-AB1-53 Alt.

WORTHINGTON, SKILLING, HELLE & JACKSON — Civil & Structural Engineers

PROJECT: THE WORLD TRADE CENTER | TITLE: SCHEDULE FOR DETAIL 247 A-F | DATE: 7-28-67

REVISIONS

12-7-67

12-21-67

	247A	247B	247C	270D	247E	247F
PLATES						
P	5/8"	5/8"	3/4"	5/8"	3/4"	5/8"
ANGLES						
S	5 x 3 x 5/16 x 0'-8"	5 x 3 x 5/16 x 0'-8"	5 x 3 x 5/16 x 0'-8"	5 x 3 x 5/16 x 0'-6"	5 x 3 x 5/16 x 0'-8"	5 x 3 x 5/16 x 0'-6"
WELDS						
1	1/4	1/4	1/4	1/4	1/4	1/4
2	5/16	3/8	3/8	3/8	3/8	3/8
3	5/16	3/8	3/8	3/8	3/8	3/8
4	5/16	3/8	3/8	3/8	3/8	3/8
DIMENSIONS						
A	1'-6"	1'-6"	1'-6"	1'-4"	1'-0"	1'-4"
B	0'-11"	0'-11"	0'-11"	0'-11"	0'-11"	0'-6"

LICENSED PROFESSIONAL ENGINEER — LESLIE E. ROBERTSON — No. 34360 — CITY OF THE STATE OF NEW YORK

6-AB1-53.1

SKILLING - HELLE - CHRISTIANSEN - ROBERTSON Structural & Civil Engineers

PROJECT: THE WORLD TRADE CENTER | TITLE: SCHEDULE FOR DETAIL 247 A,C,E,G ALT. | DATE: 12-21-67

REVISIONS

* PL Q is used only at specified locations

	247 A	247 C	247 E	247 G		
PLATES						
P	5/8"	3/4"	3/4"	3/8"		
Q	1" *	—	—	3/4" *		
R	5/8	3/4	3/4	3/8		
DIMENSIONS						
A	1'-6"	1'-6"	1'-0"	1'-4"		
B	0'-11"	0'-11"	0'-11"	0'-4"		
WELDS						
1	—	—	—	—		
2	5/16	3/8	3/8	1/4		
3	5/16	3/8	3/8	1/4		
4	5/16	3/8	3/8	1/4		
5	3/4	7/8	7/8	1/2		
6	7/8	—	—	1/2		

LICENSED PROFESSIONAL ENGINEER LESLIE E. ROBERTSON No. 34360 UNIVERSITY OF THE STATE OF NEW YORK

6-AB1-53.1 Alt.

WORTHINGTON, SKILLING, HELLE & JACKSON, Civil & Structural Engineers

PROJECT THE WORLD TRADE CENTER | TITLE SCHEDULE FOR DETAIL 247 | DATE 8-5-67

REVISIONS

	247G
PLATES	
P	3/8
ANGLES	
S	5x3x5/16x0'-6"
WELDS	
①	1/4
②	1/4
③	1/4
④	1/4
DIMENSIONS	
A	1'-4"
B	0'-4"

LICENSED PROFESSIONAL ENGINEER
LESLIE E. ROBERTSON
No. 34360
CITY OF THE STATE OF NEW YORK

6-AB1-53.2

SKILLING - HELLE - CHRISTIANSEN - ROBERTSON — Structural & Civil Engineers

PROJECT: THE WORLD TRADE CENTER | TITLE: CONNECTION DETAIL 247H | DATE: 9-29-67

REVISIONS

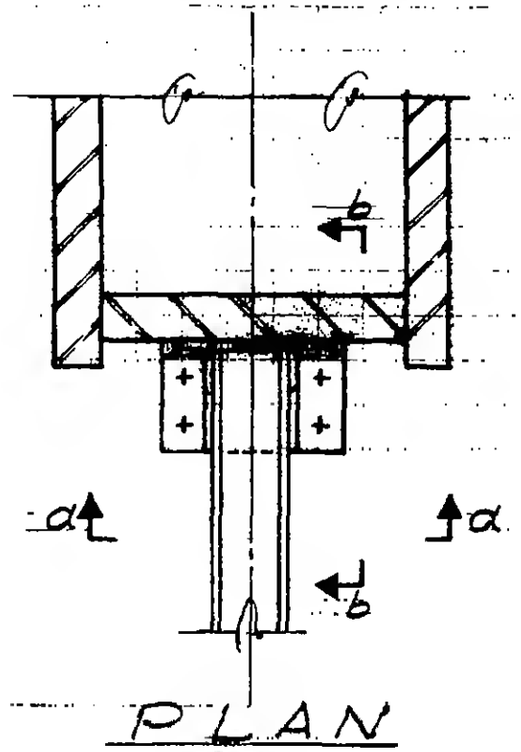

PLAN

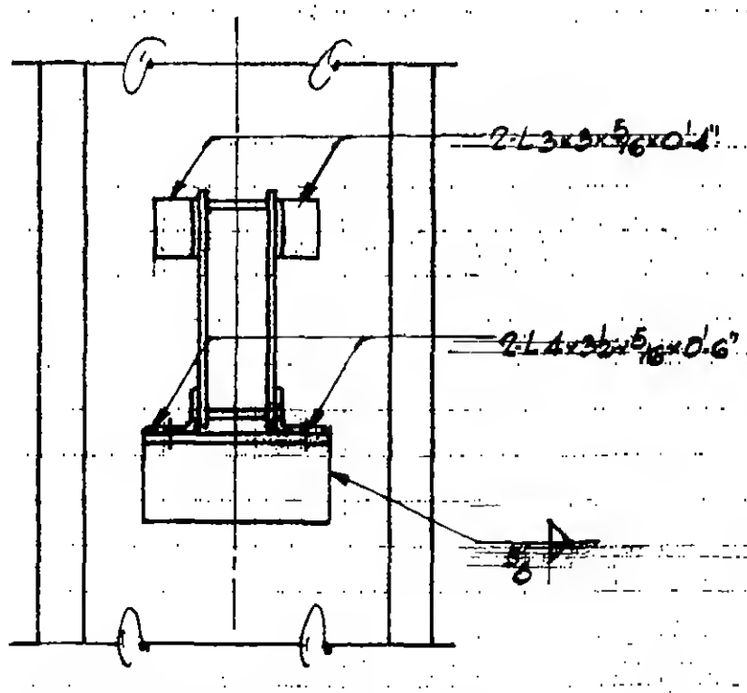

Section a-a

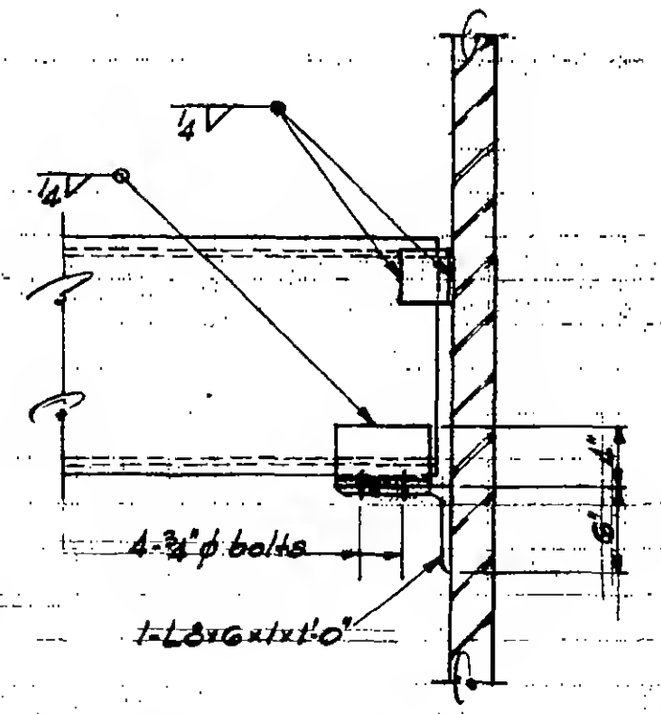

Section b-b

LICENSED PROFESSIONAL ENGINEER
LESLIE E. ROBERTSON
No. 34360
UNIVERSITY OF THE STATE OF NEW YORK

G-AB1-53.3

SKILLING - HELLE - CHRISTIANSEN - ROBERTSON — Structural & Civil Engineers

PROJECT: THE WORLD TRADE CENTER | TITLE: CONNECTION DETAIL 247 I | DATE: 7-24-68

REVISIONS

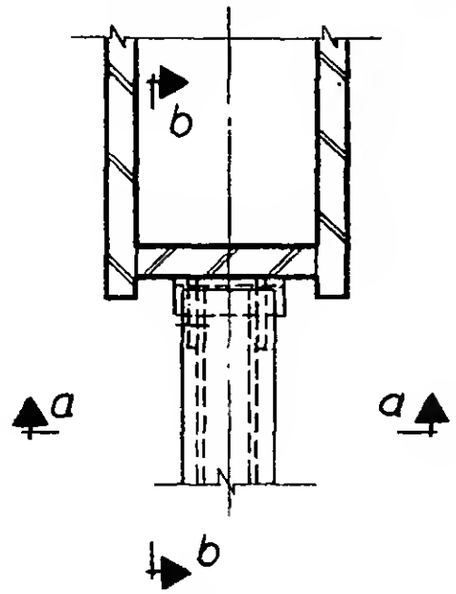

Plan

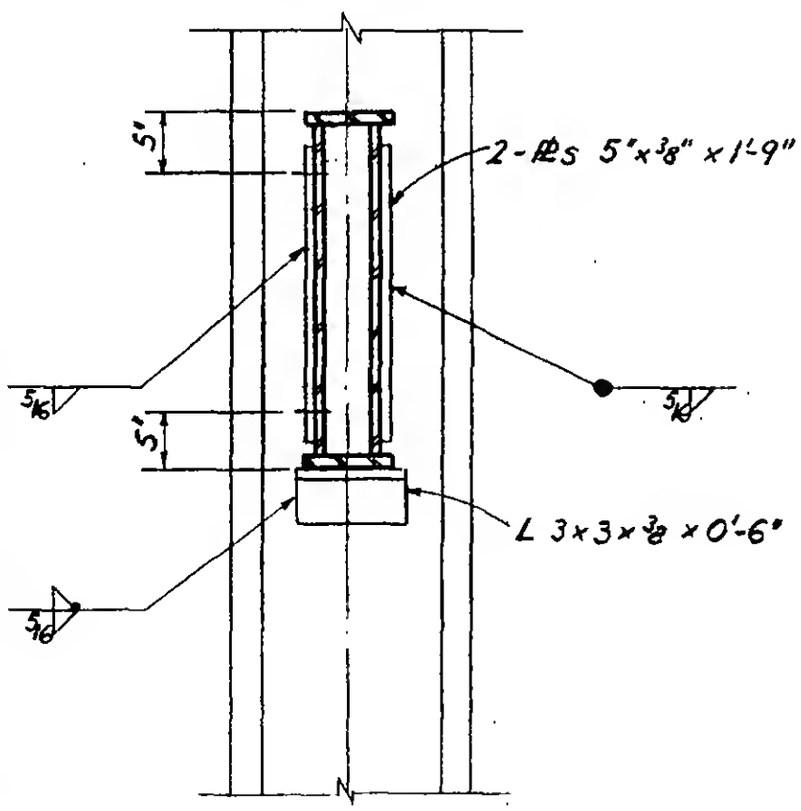

Section a-a

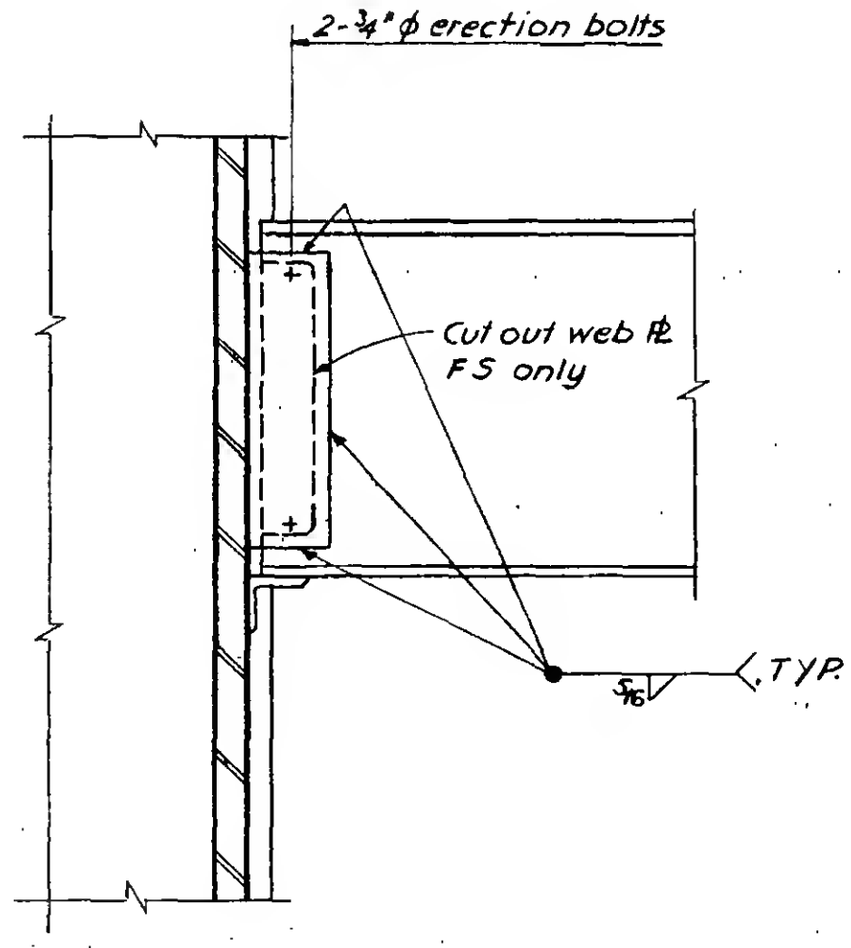

Section b-b

6-AB1-53.4

LICENSED PROFESSIONAL ENGINEER
LESLIE E. ROBERTSON
No. 34360
UNIVERSITY OF THE STATE OF NEW YORK

WORTHINGTON, SKILLING, HELLE & JACKSON — Civil & Structural Engineers

PROJECT: THE WORLD TRADE CENTER | TITLE: CONNECTION DETAIL 248A | DATE: 6-30-67

REVISIONS

10-5-67

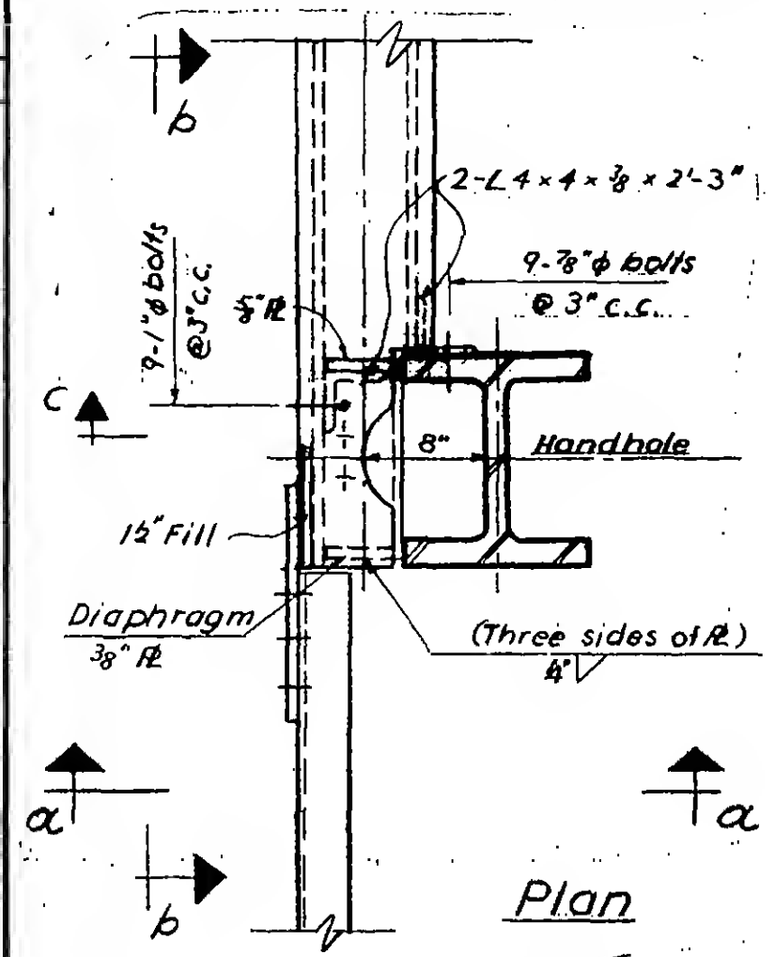

Plan

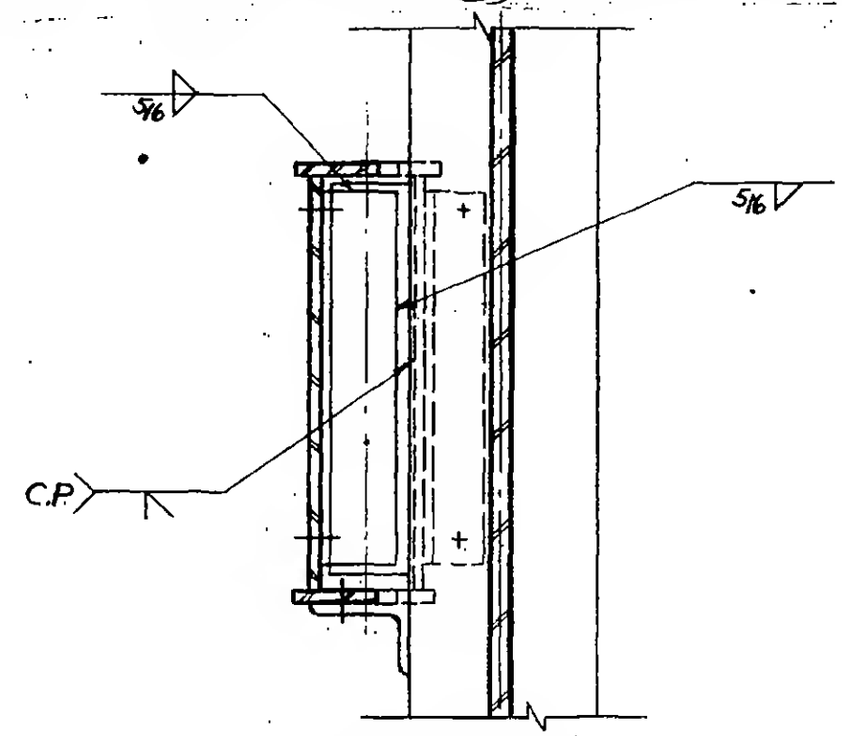

Section c-c

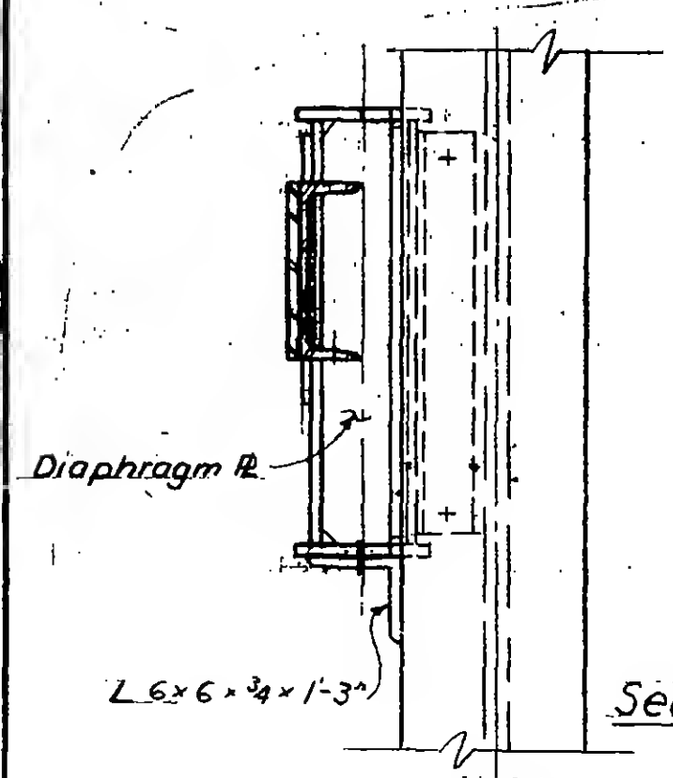

Section a-a

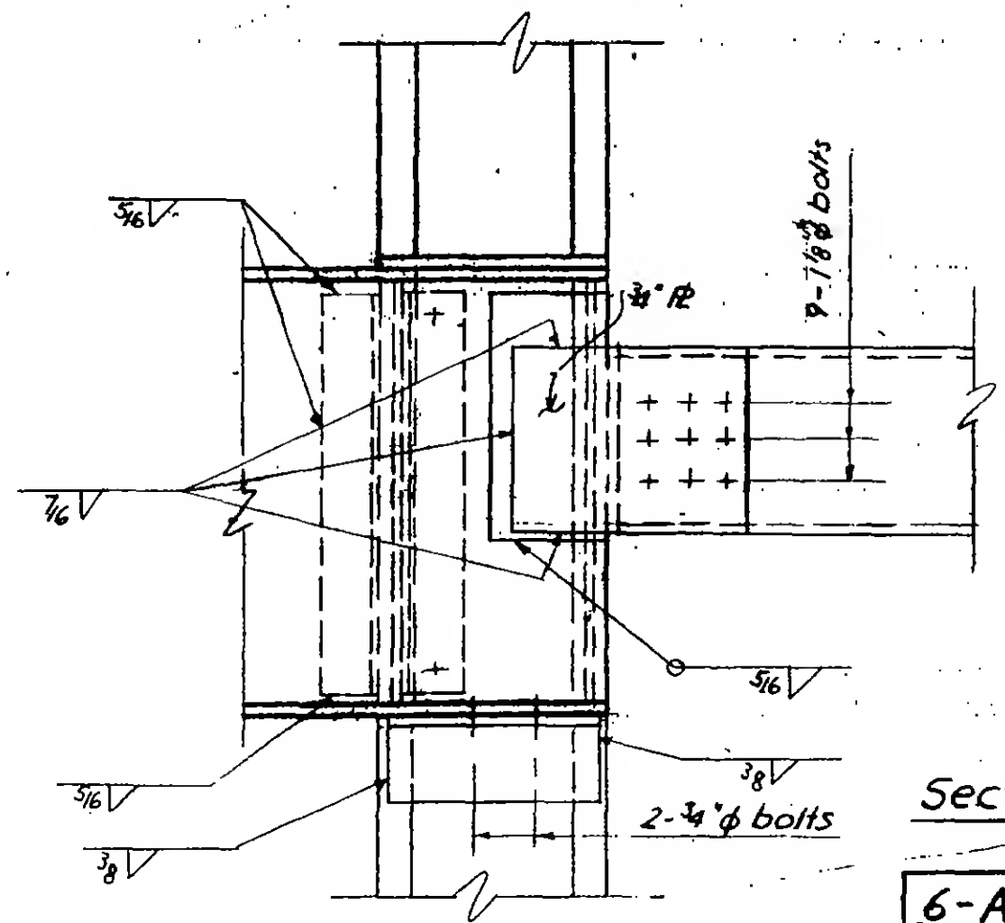

Section b-b

6-AB1-54

LICENSED PROFESSIONAL ENGINEER
LESLIE E. ROBERTSON
No. 34360
UNIVERSITY OF THE STATE OF NEW YORK

WORTHINGTON, SKILLING, HELLE & JACKSON — Civil & Structural Engineers

PROJECT: THE WORLD TRADE CENTER | TITLE: CONNECTION DETAIL 249 A,B,C | DATE: 5-1-67

REVISIONS

5-9-67
7-28-67
8-5-67
9-15-67
11-10-67
12-7-67

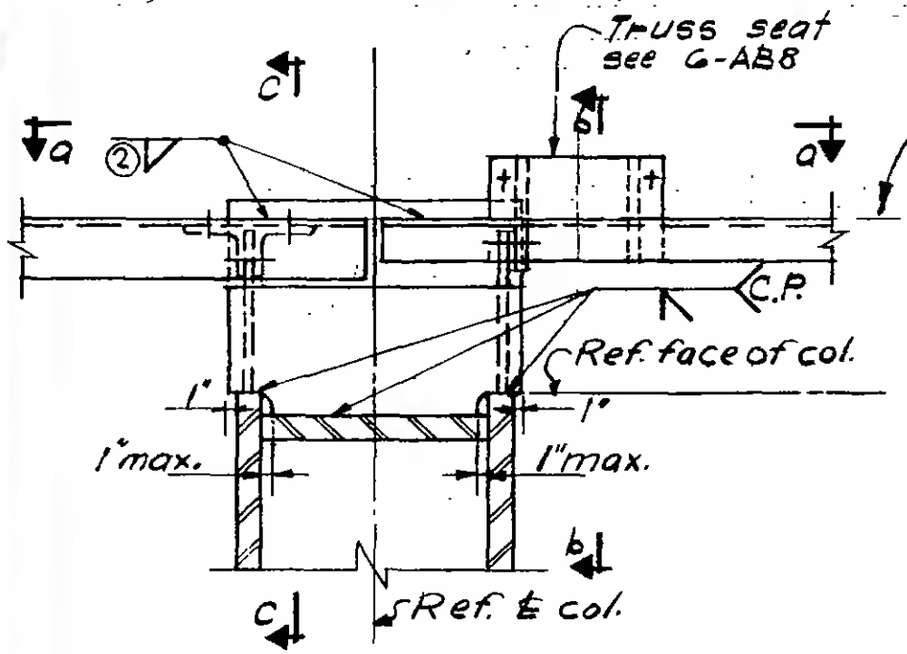

Plan

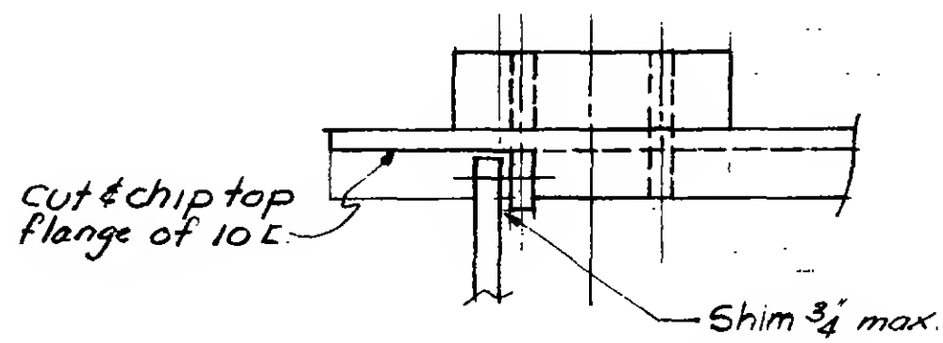

SECTION d-d

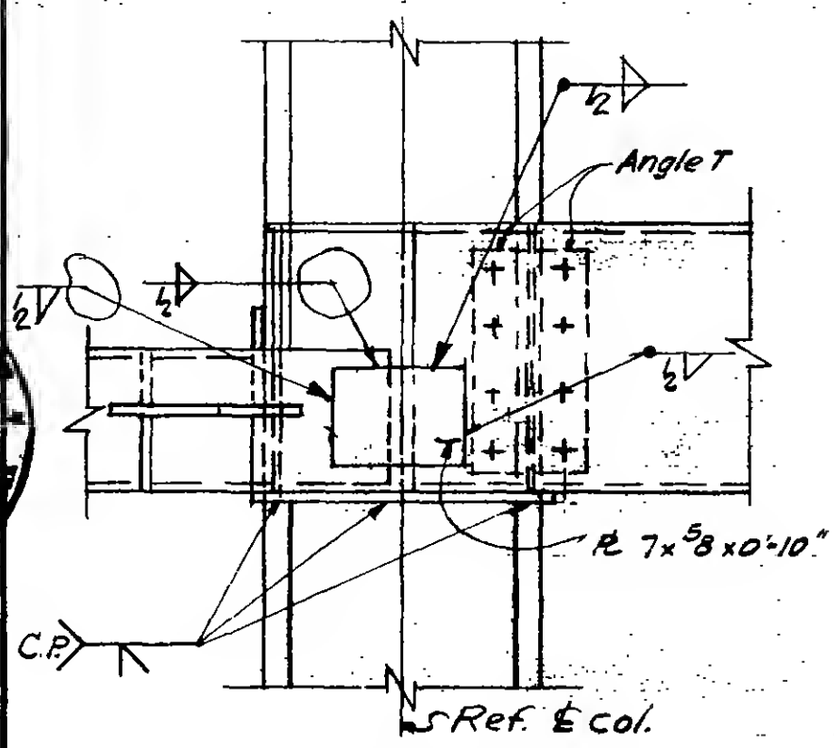

Section a-a

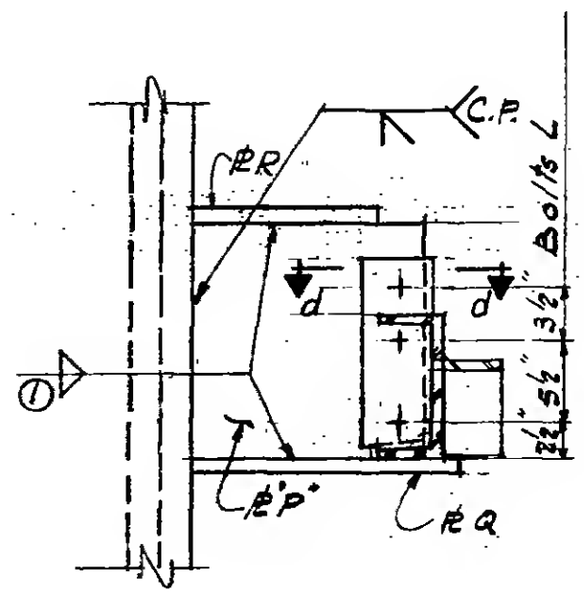

SECTION b-b

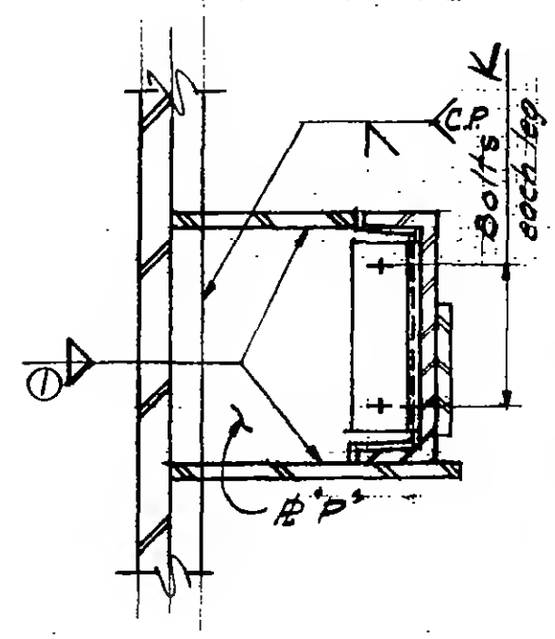

SECTION C-C

6-AB1-55

SKILLING - HELLE - CHRISTIANSEN - ROBERTSON Structural & Civil Engineers

PROJECT: THE WORLD TRADE CENTER

TITLE: SCHEDULE FOR DETAIL 249 A-C

DATE: 7-28-67

REVISIONS

7-15-67

11-10-67

	249A	249B	249C			
PLATES						
P	7/8"	7/8"	7/8"			
Q	1"	1/2"	1/2"			
R	1"	1/2"	1/2"			
ANGLES						
T	4×3 1/2×3/8	4×3 1/2×5/16	4×3 1/2×5/16			
BOLTS						
K	5-7/8"φ	5-7/8"φ	5-7/8"φ			
L	3-1 1/8"φ	3-1"φ	3-1"φ			
WELDS						
①	3/8	3/8	3/8			
②	3/8	3/8	3/8			

6-AB1-55.1

WORTHINGTON, SKILLING, HELLE & JACKSON — Civil & Structural Engineers

PROJECT: THE WORLD TRADE CENTER | TITLE: CONNECTION DETAIL 251 A, B, D | DATE: 5-22-67

REVISIONS
8-14-67
9-15-67

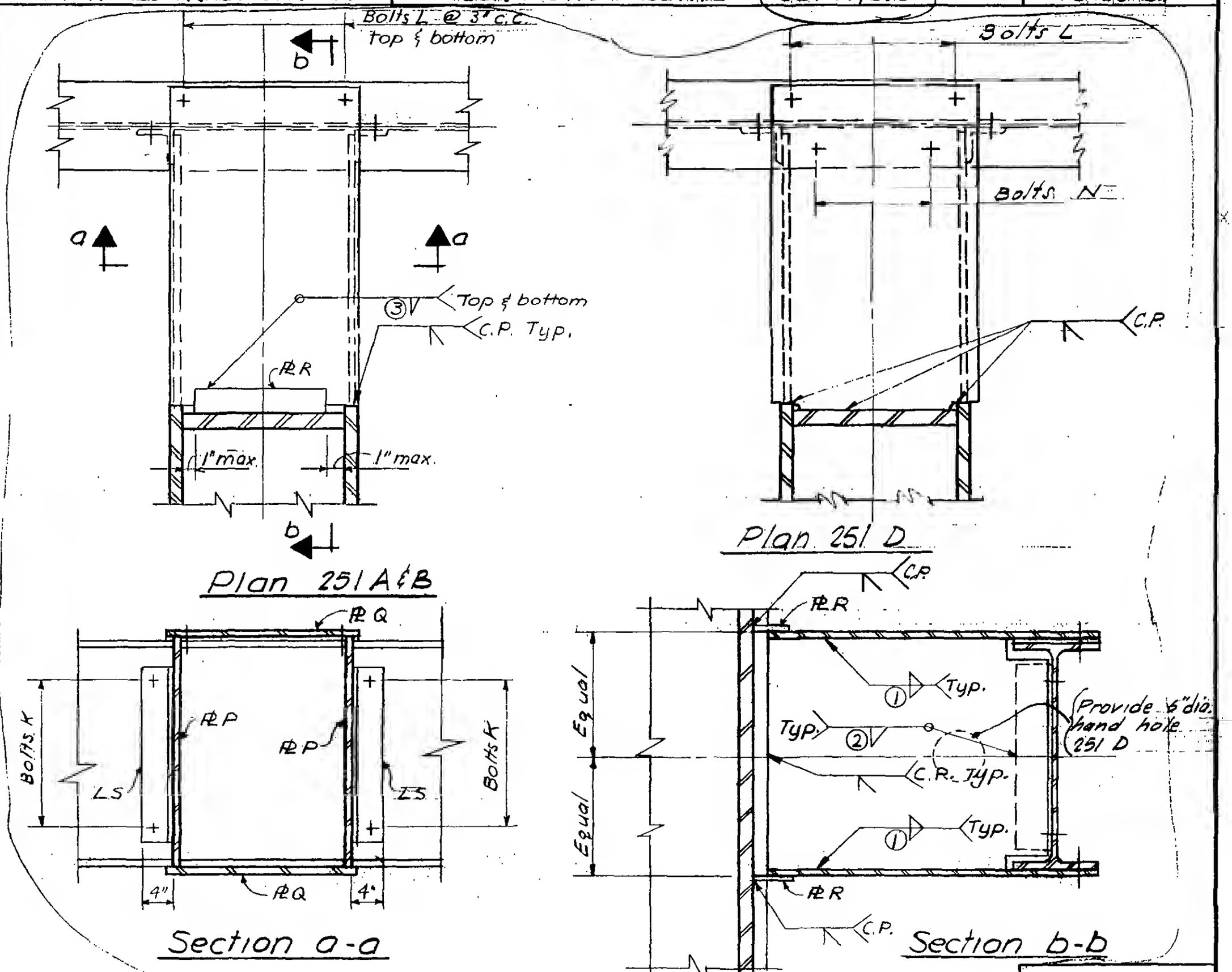

LICENSED PROFESSIONAL ENGINEER LESLIE E. ROBERTSON No. 34360 UNIVERSITY OF THE STATE OF NEW YORK

6-AB1-56

SKILLING - HELLE - CHRISTIANSEN - ROBERTSON Structural & Civil Engineers

PROJECT: THE WORLD TRADE CENTER | TITLE: CONNECTION DETAIL 259 C | DATE: 8-14-67

REVISIONS

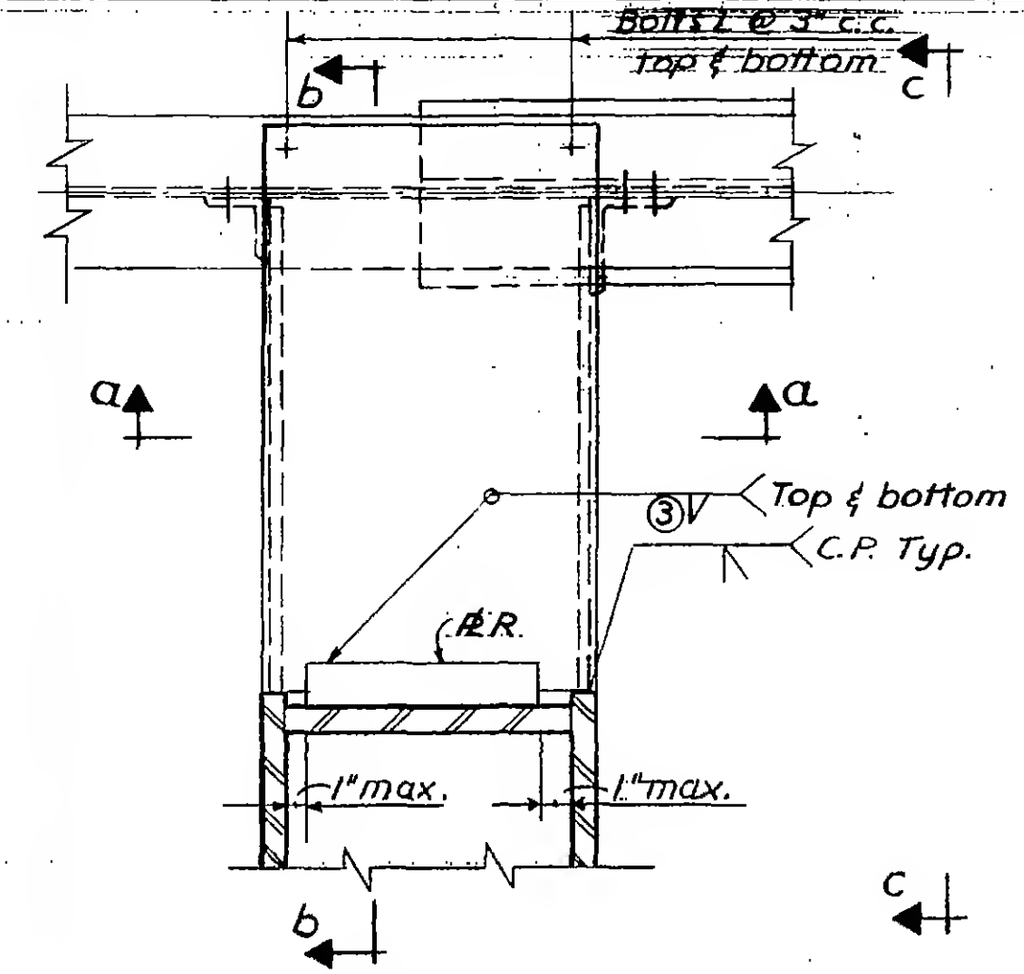

Plan

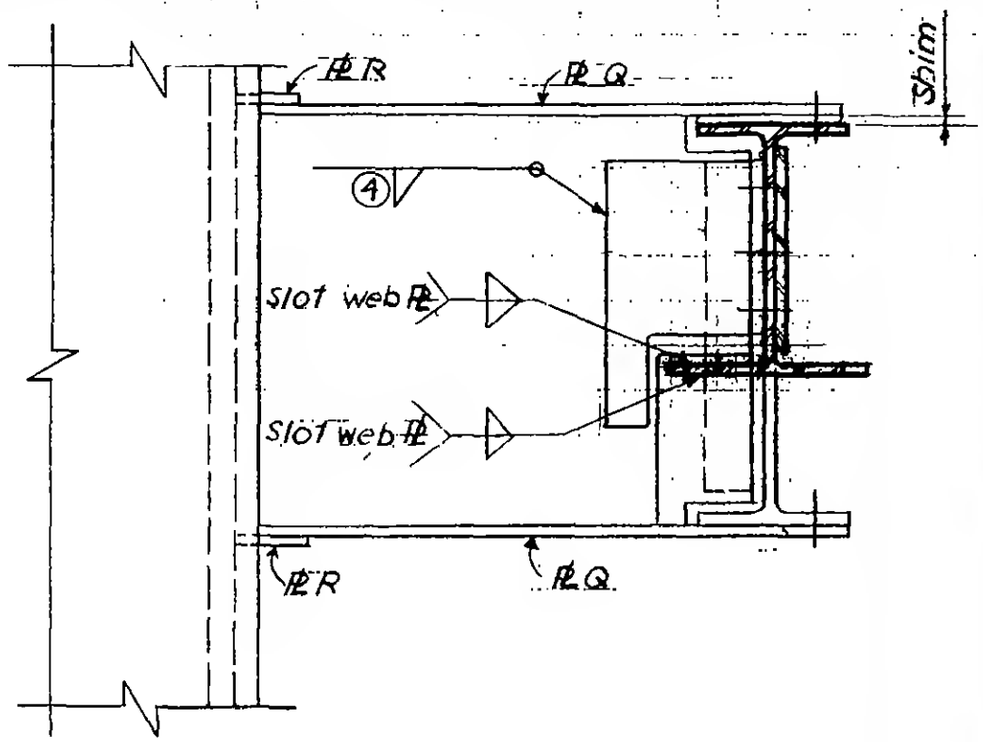

Section b-b

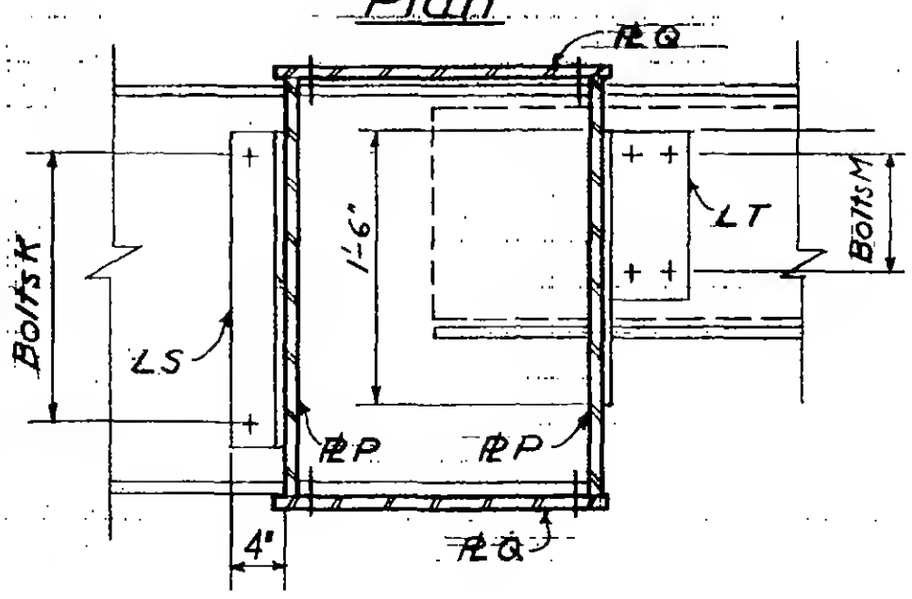

Section a-a

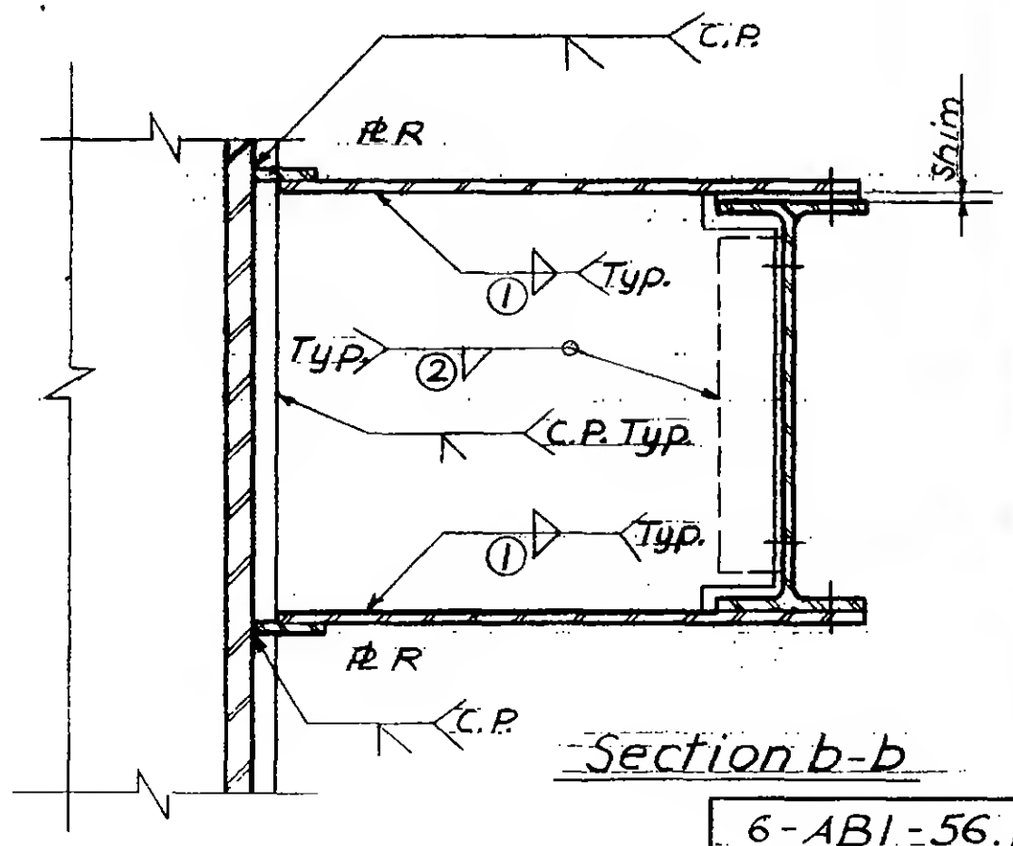

Section b-b

6-AB1-56.1

LICENSED PROFESSIONAL ENGINEER
LESLIE E. ROBERTSON
No. 34360
UNIVERSITY OF THE STATE OF NEW YORK

SKILLING - HELLE - CHRISTIANSEN - ROBERTSON Structural & Civil Engineers

PROJECT THE WORLD TRADE CENTER | TITLE SCHEDULE FOR DETAIL 251 A, B, C, D, E, F, G | DATE 8-14-67

REVISIONS
9-15-67
10-2-67

	251 A	251 B	251 C	251 D	251 E,G	251 F
PLATES						
P	1/2"	5/8"	1/2"	3/4	1 1/2	1 1/4"
Q	1/2"	5/8"	1/2"	5/8	5/8	5/8"
R	6" x 5/8"	6" x 7/8"	6" x 5/8"	—	1 1/2	—
ANGLES						
S	6 x 4 x 9/16 x 1'-8 1/2"	6 x 4 x 9/16 x 1'-8 1/2"	6 x 4 x 9/16 x 1'-8 1/2"	4 x 3 1/2 x 3/8	—	—
T	—	—	8 x 8 x 1	—	—	—
BOLTS						
K	7 - 1" φ	7 - 1" φ	7 - 1" φ	4 - 7/8" φ	2 - 3/4" φ	3 - 3/4" φ
L	6 - 3/4" φ	6 - 3/4" φ	6 - 3/4" φ	5 - 1 1/8" φ (A490)	4 - 3/4" φ	4 - 3/4" φ
M	—	—	8 - 1 1/8" φ	—	—	—
N	—	—	—	4 - 1 1/8" φ (490)	—	—
WELDS						
1	1/2	5/8	9/16	5/16	5/16"	5/16"
2	1/2	1/2	9/16	5/16	—	—
3	1/2	5/8	1/2	—	—	—
4	—	—	7/8	—	—	—

LICENSED PROFESSIONAL ENGINEER
LESLIE E. ROBERTSON
No. 34360
UNIVERSITY OF THE STATE OF NEW YORK

6-AB1-56.2

SKILLING - HELLE - CHRISTIANSEN - ROBERTSON Structural & Civil Engineers

PROJECT: THE WORLD TRADE CENTER | TITLE: CONNECTION DETAIL - 251 E, F, G, J, L, M | DATE: 10-2-67

REVISIONS
-17-67
9-18-68

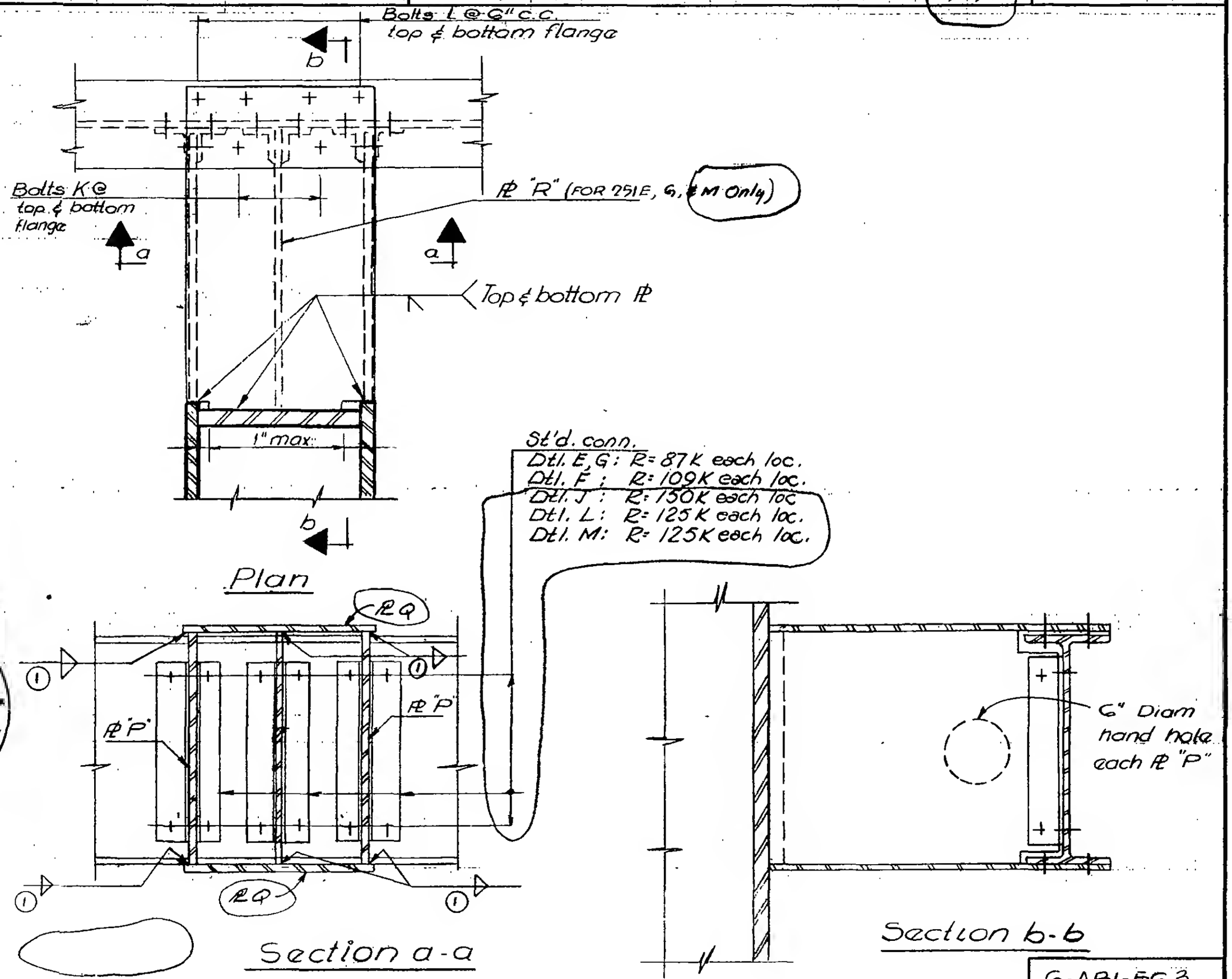

6-AB1-56.3

SKILLING - HELLE - CHRISTIANSEN - ROBERTSON Structural & Civil Engineers

PROJECT THE WORLD TRADE CENTER | TITLE CONNECTION DETAIL 251 H | DATE 10-2-67

REVISIONS

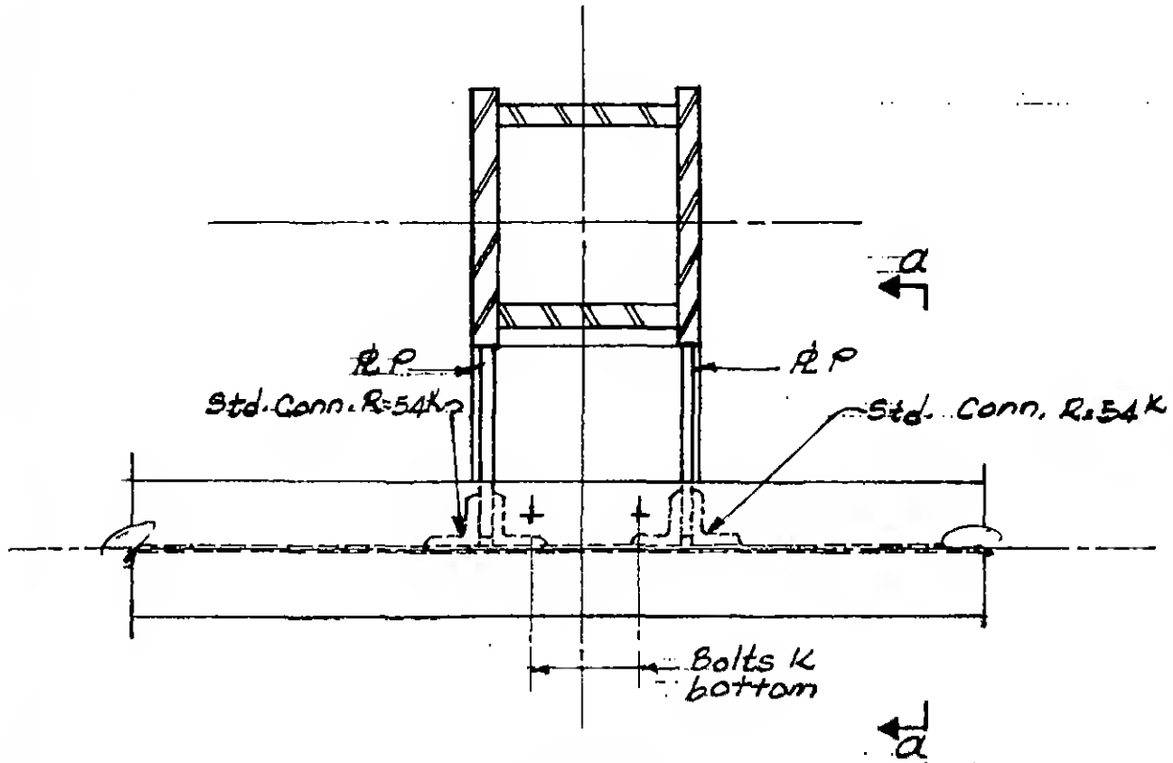

PLAN

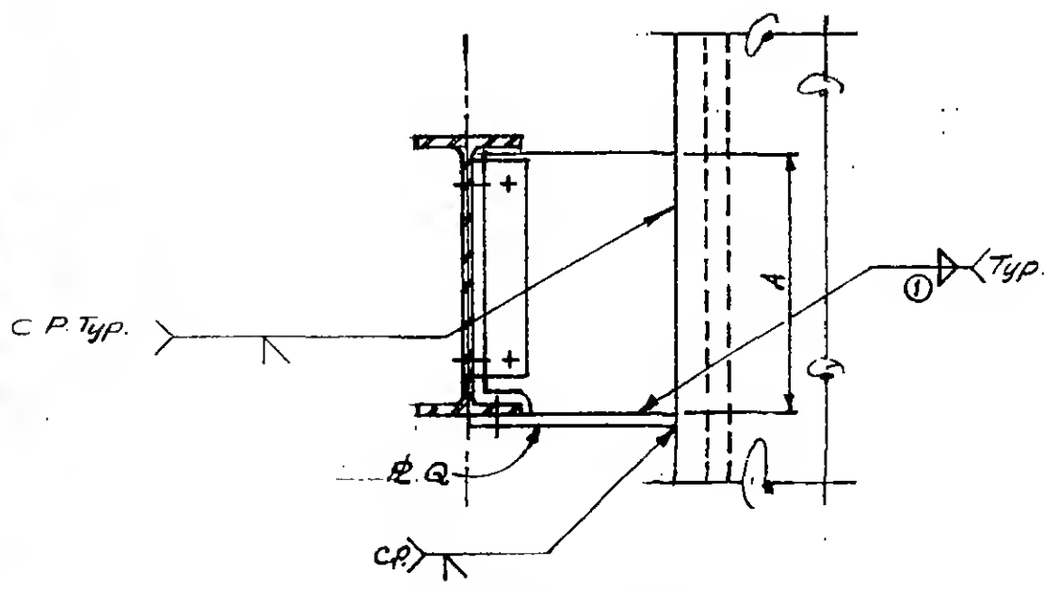

Section a-a

LICENSED PROFESSIONAL ENGINEER
LESLIE E. ROBERTSON
No. 34360
UNIVERSITY OF THE STATE OF NEW YORK

G-AB1-56.4

SKILLING - HELLE - CHRISTIANSEN - ROBERTSON Structural & Civil Engineers

PROJECT: THE WORLD TRADE CENTER | TITLE: SCHEDULE FOR DETAIL 251 H, J, L, M | DATE: 10-2-67

REVISIONS

9-18-68

	251 H	251 J	251 L	251 M
PLATE				
P	7/8"	1 1/4"	1 1/4"	1 1/4"
Q	7/8"	5/8"	3/4"	1"
DIMENSION				
A	1'-10"	-	-	-
BOLTS				
K	3-3/4" ϕ	3-3/4" ϕ	4-1" ϕ	4-1" ϕ
L	-	4-3/4" ϕ	4-1" ϕ	6-1" ϕ
WELD				
①	5/16	5/16	3/8	3/8

LICENSED PROFESSIONAL ENGINEER
LESLIE E. ROBERTSON
No. 34360
UNIVERSITY OF THE STATE OF NEW YORK

G-AB1-56.5

WORTHINGTON, SKILLING, HELLE & JACKSON — Civil & Structural Engineers

PROJECT: THE WORLD TRADE CENTER | TITLE: CONNECTION DETAIL 252A | DATE: 6-5-67

REVISIONS

10-2-67

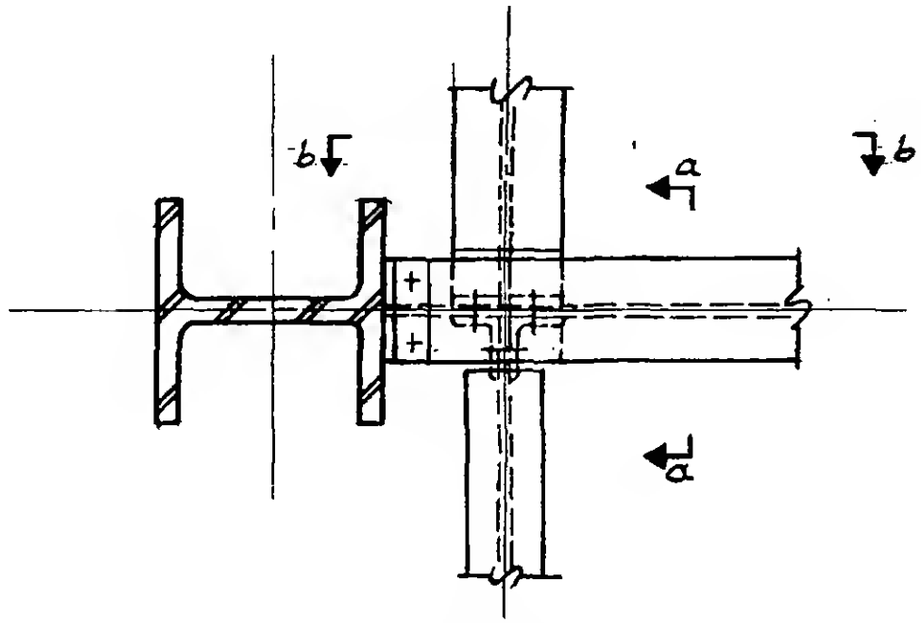

PLAN

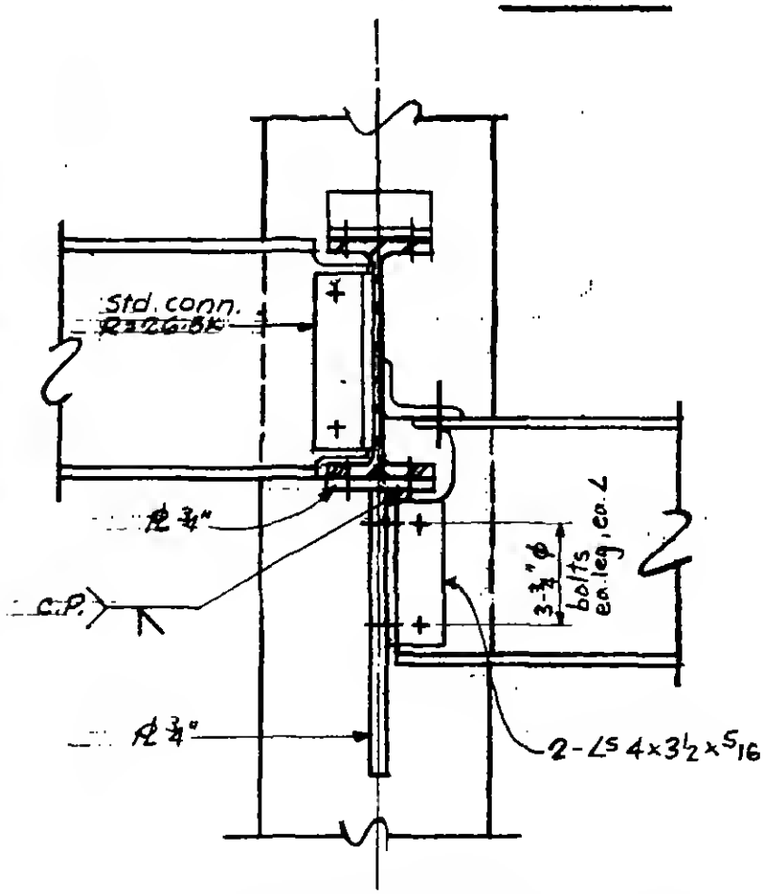

SECTION a-a

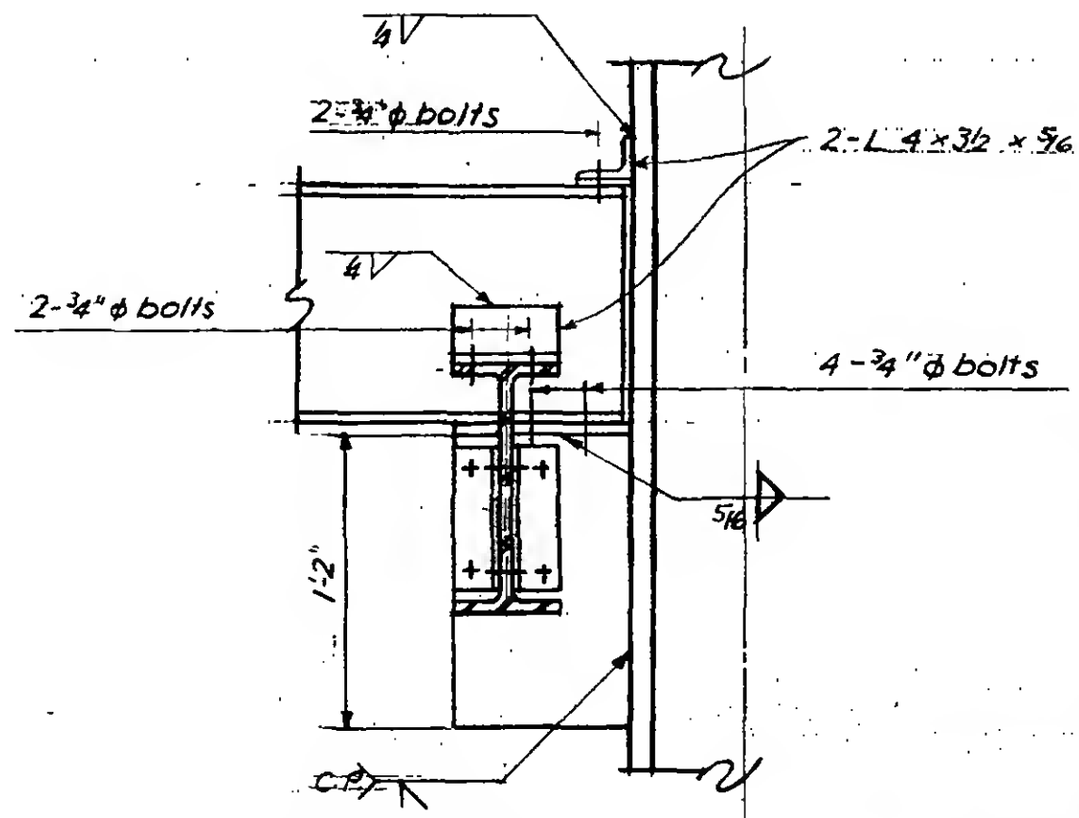

SECTION b-b

6-AB1-57

WORTHINGTON, SKILLING, HELLE & JACKSON — Civil & Structural Engineers

PROJECT: THE WORLD TRADE CENTER | TITLE: CONNECTION DETAIL 253 A | DATE: 6-30-67

REVISIONS

10-5-67

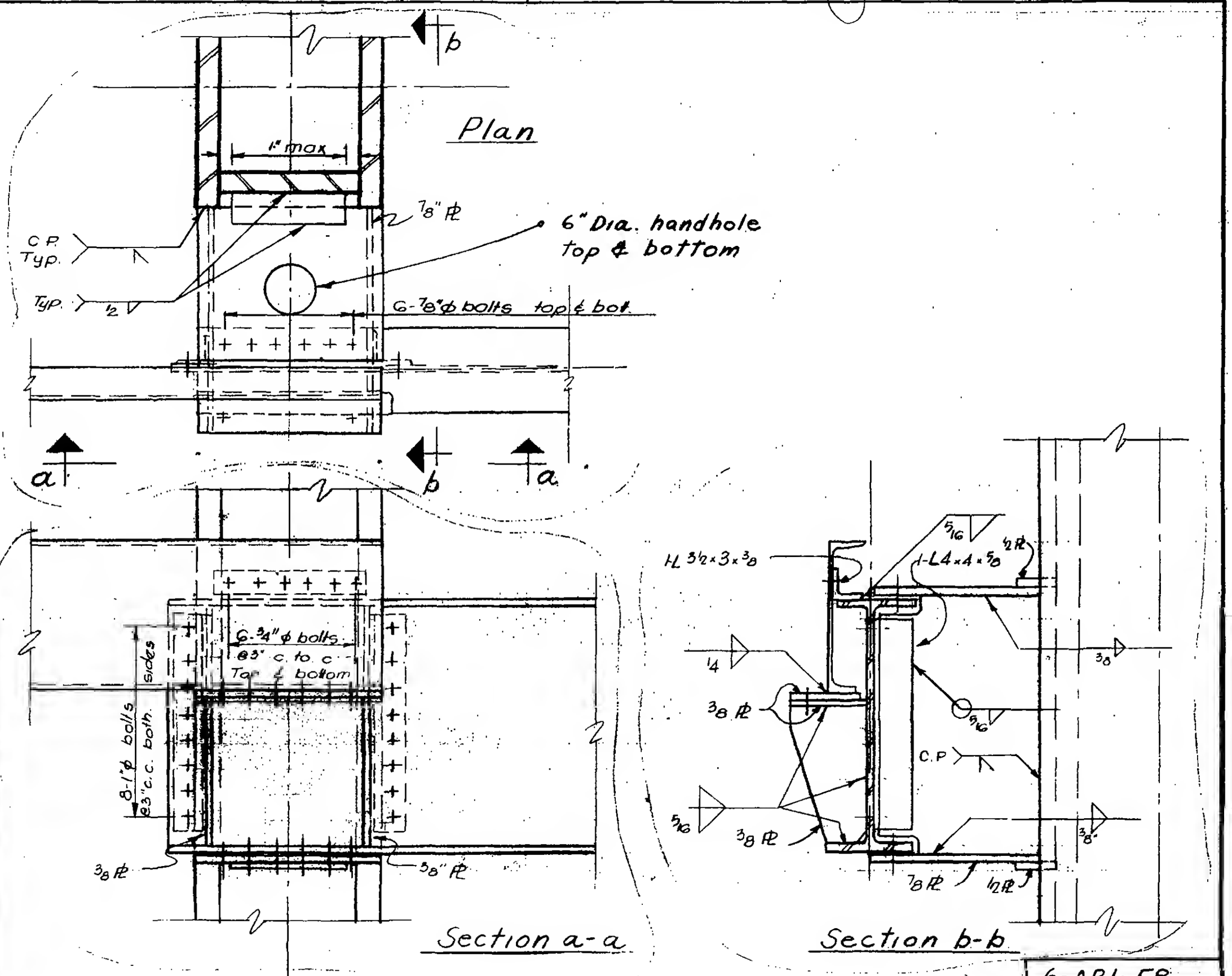

LICENSED PROFESSIONAL ENGINEER LESLIE E. ROBERTSON No. 34360 UNIVERSITY OF THE STATE OF NEW YORK

6-ABI-58

WORTHINGTON, SKILLING, HELLE & JACKSON — Civil & Structural Engineers

PROJECT: THE WORLD TRADE CENTER | TITLE: [redacted] | DATE: [redacted]

REVISIONS
5-9-67
7-28-67
9-15-67
11-14-67
5-6-68

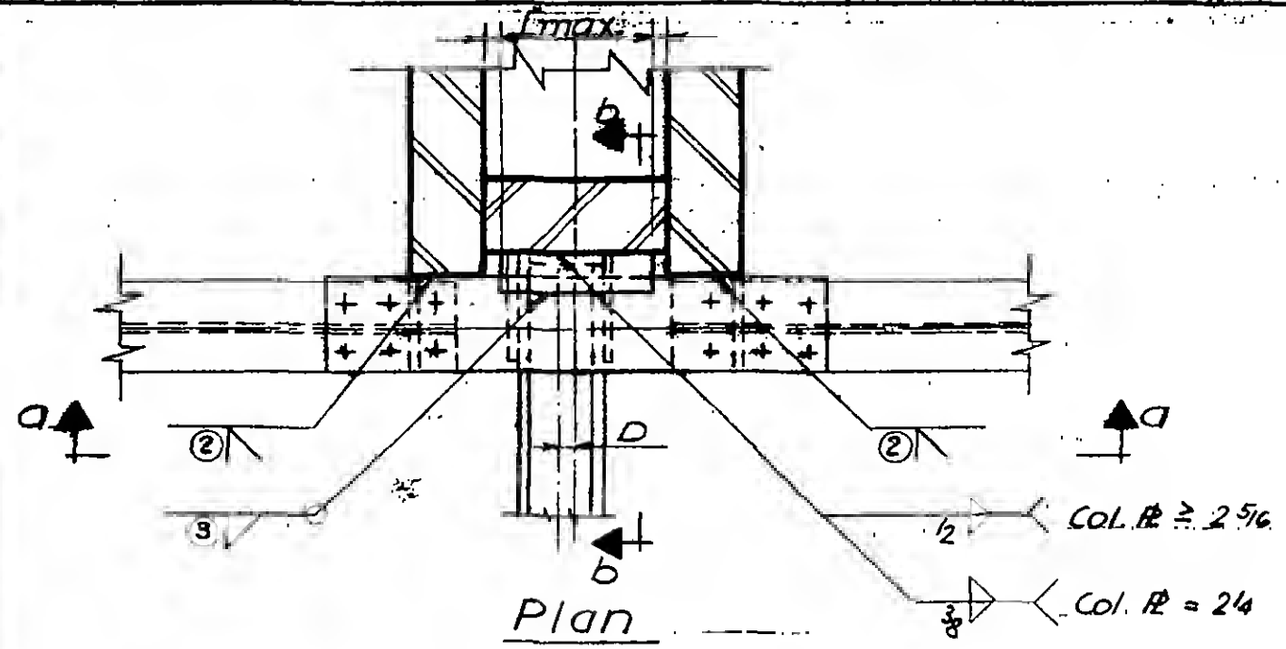

Plan

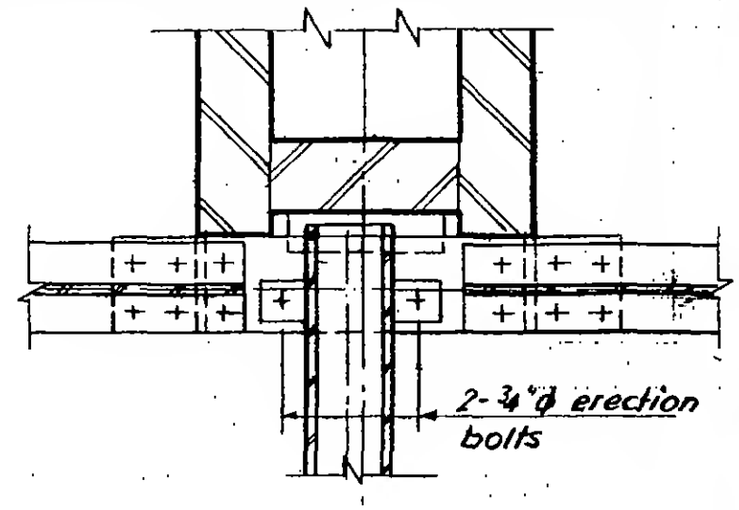

Plan

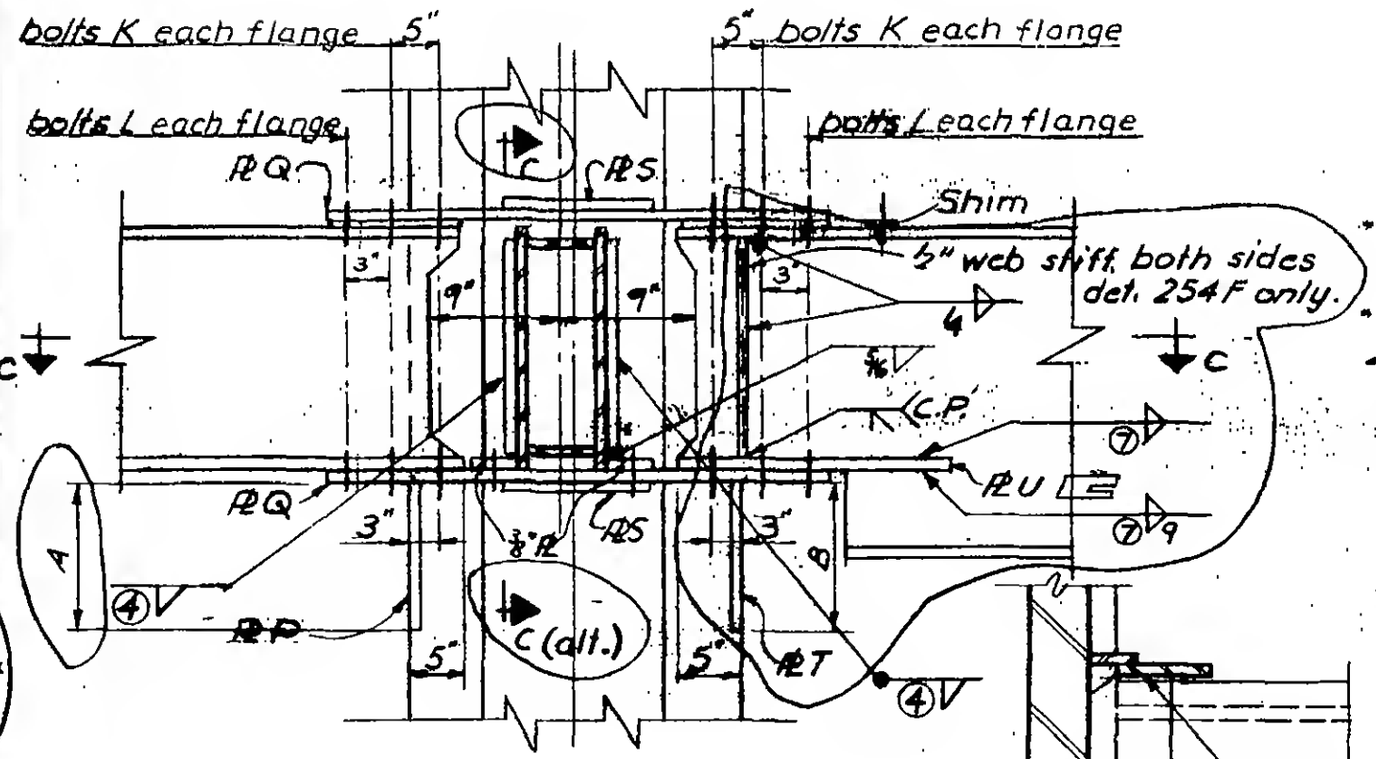

Section a-a

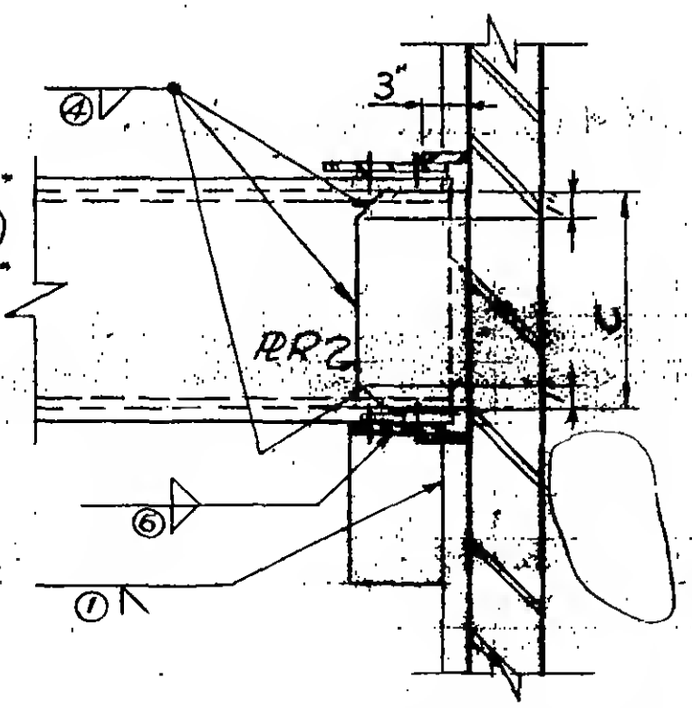

Section b-b

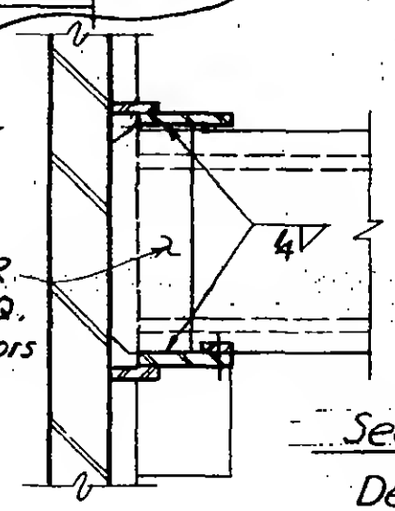

Section c-c (Alternate)

Details 254 A,B,C,D & E | G-AB1-59

LICENSED PROFESSIONAL ENGINEER LESLIE E. ROBERTSON No. 34360 STATE OF NEW YORK

SKILLING - HELLE - CHRISTIANSEN - ROBERTSON Structural & Civil Engineers

PROJECT: THE WORLD TRADE CENTER | TITLE: SCHEDULE FOR DETAIL 254 A, B, C, F | DATE: 7-28-67

REVISIONS

	254 A	254 B	254 C	254 F
PLATES				
P	3/8"	3/8"	3/8"	3/8"
Q	1/2"	1/2"	1/2"	1/2"
R	4 x 5/8 x 1'-2"	4 x 3/4 x 1'-2"	4 x 5/8 x 1'-2"	4 x 3/4 x 1'-2"
S	—	1/2"	1/2"	1/2"
T	3/8"	3/8"	3/8"	3/4"
U	—	—	—	6 x 1/2
DIMENSIONS				
A	1'-0"	1'-0"	1'-0"	1'-0"
C	1'-2"	1'-2"	1'-2"	1'-2"
B	—	—	—	1'-2"
BOLTS				
K	4 - 3/4" ϕ	4 - 1" ϕ	4 - 1" ϕ	4 - 1" ϕ
L	—	2 - 1" ϕ	2 - 1" ϕ	2 - 1" ϕ
WELDS				
1	C.P.	C.P.	C.P.	C.P.
2	C.P.	C.P.	C.P.	C.P.
3	—	7/16	7/16	7/16
4	5/8	3/4	5/8	3/4
5	—	C.P.	C.P.	C.P.
6	5/16	5/16	5/16	5/16
7	—	—	—	3/8

LICENSED PROFESSIONAL ENGINEER
LESLIE E. ROBERTSON
No. 34360
UNIVERSITY OF THE STATE OF NEW YORK

6-AB1-59.1

SKILLING - HELLE - CHRISTIANSEN - ROBERTSON Structural & Civil Engineers

PROJECT: THE WORLD TRADE CENTER | TITLE: CONNECTION DETAIL 254 D | DATE: 12-21-67

REVISIONS

7-17-68

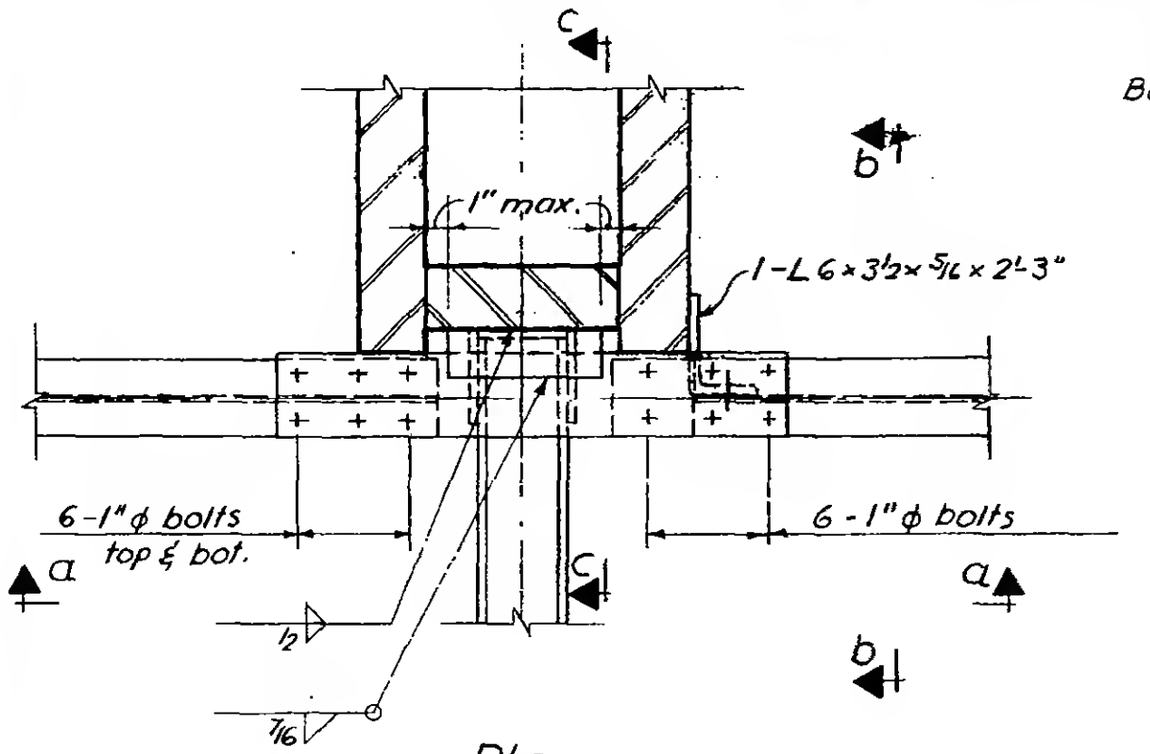

Plan

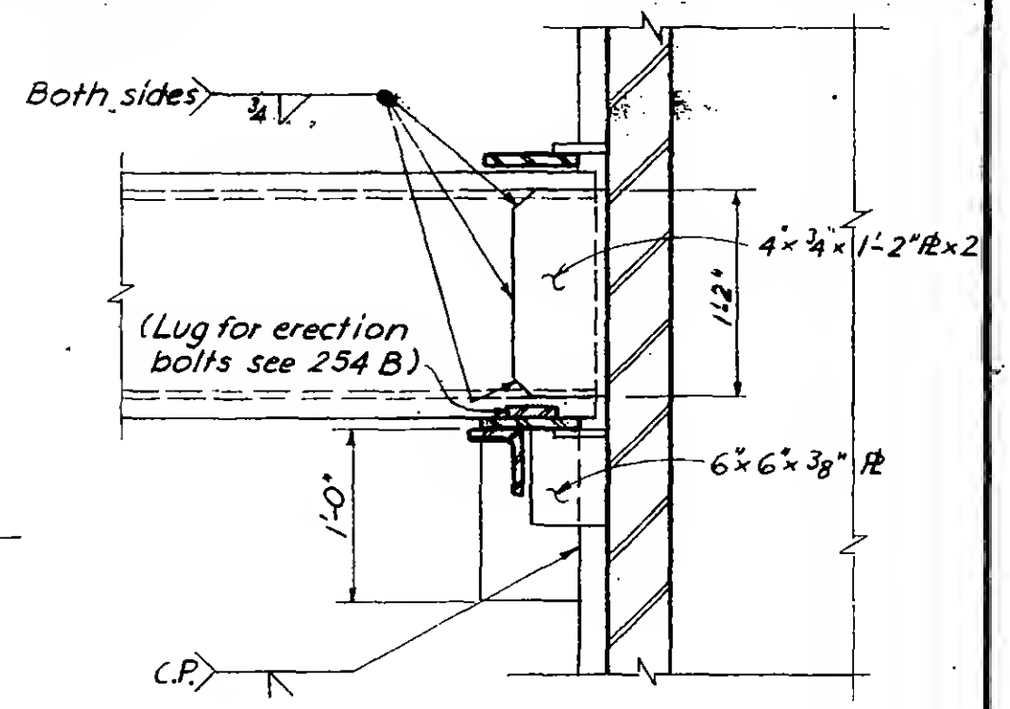

Section c-c

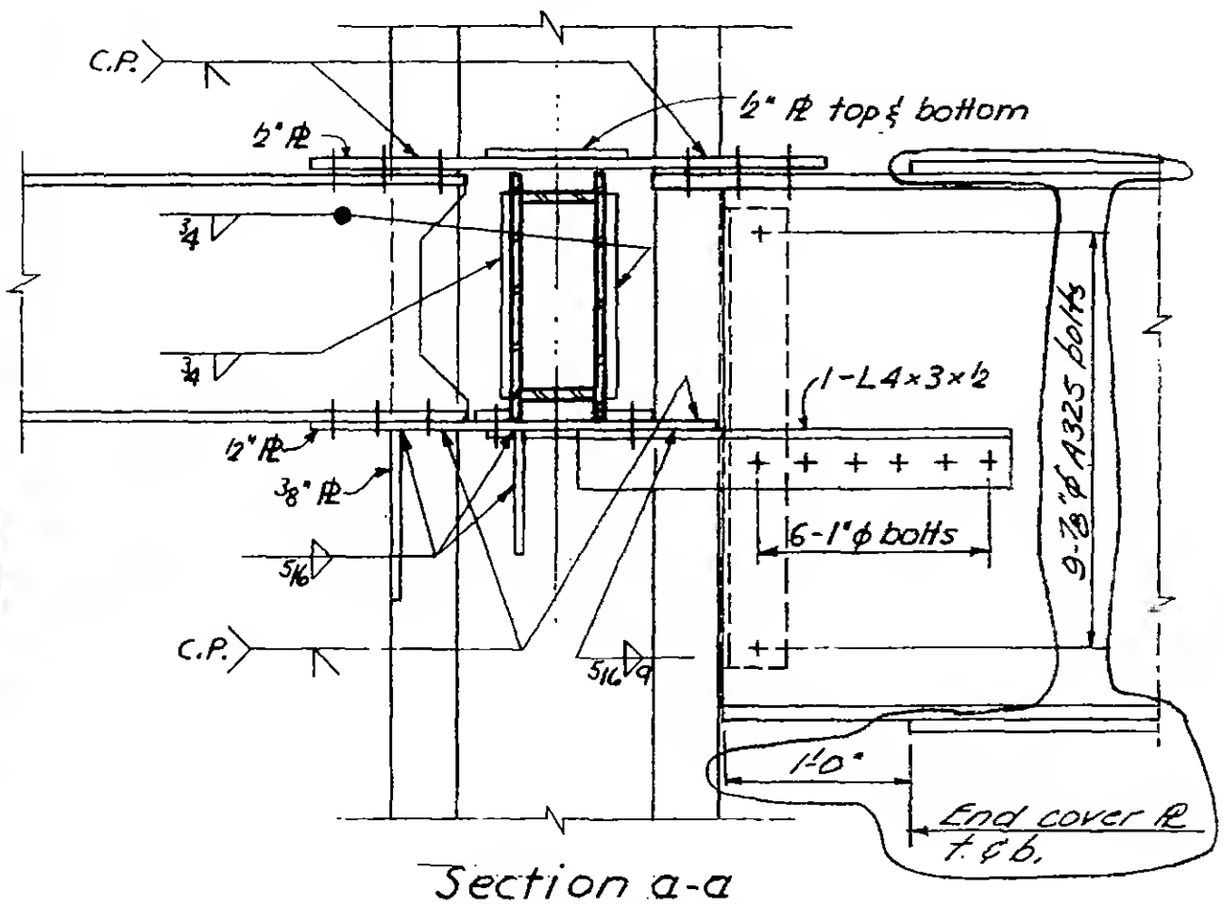

Section a-a

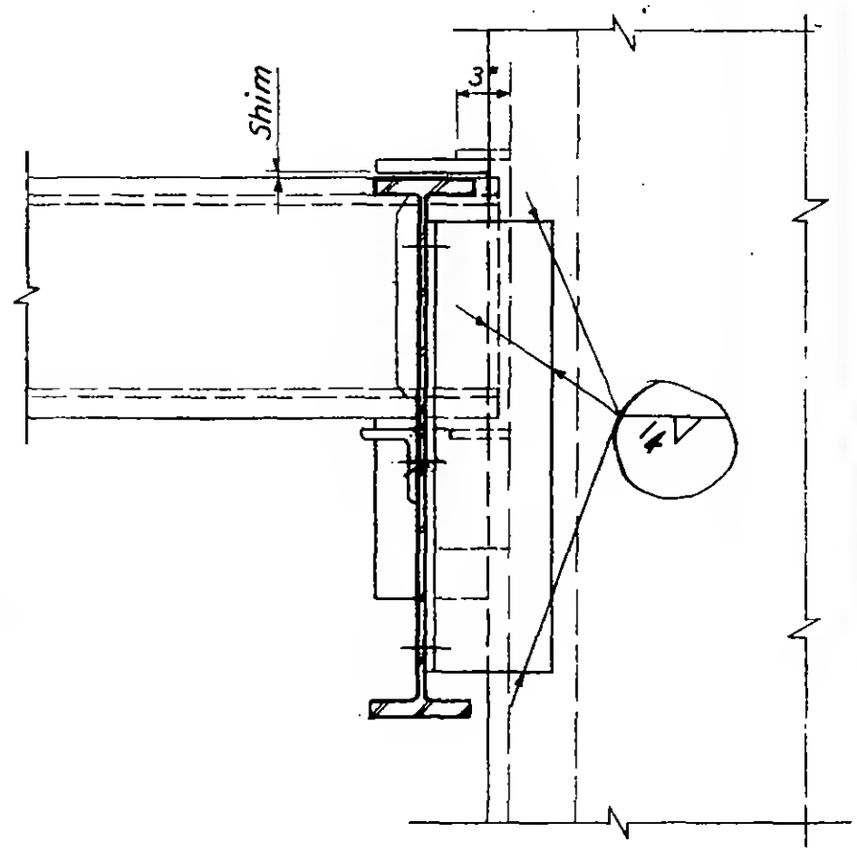

Section b-b

6-AB1-59.2

SKILLING - HELLE - CHRISTIANSEN - ROBERTSON Structural & Civil Engineers

PROJECT: THE WORLD TRADE CENTER | TITLE: CONNECTION DETAIL 254E | DATE: 4-17-68

REVISIONS

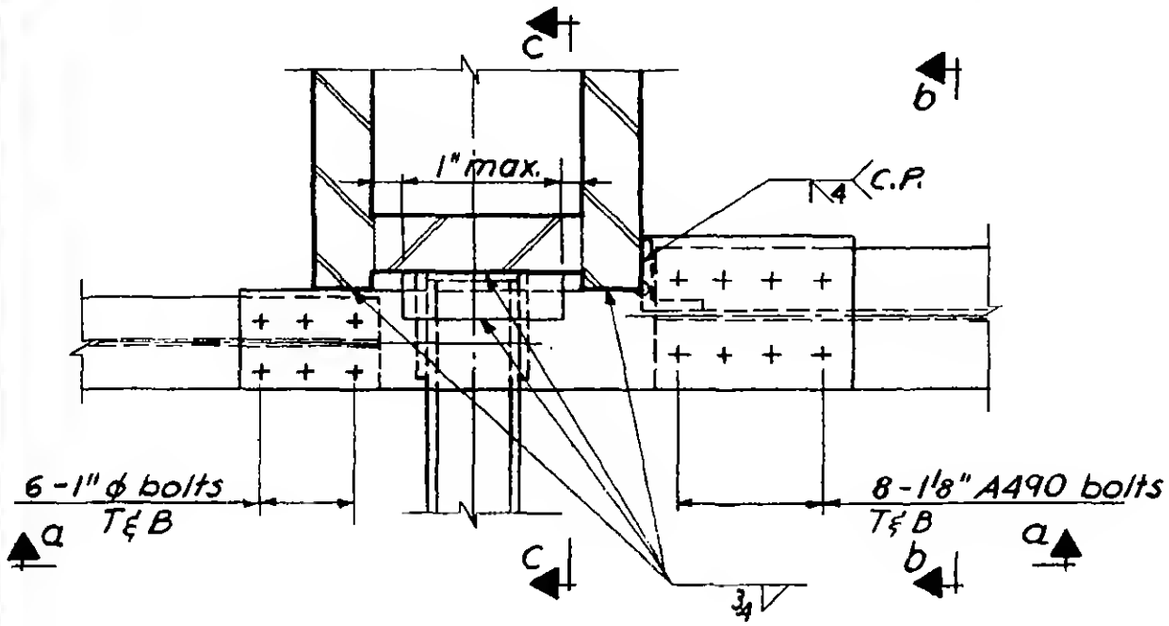

Plan

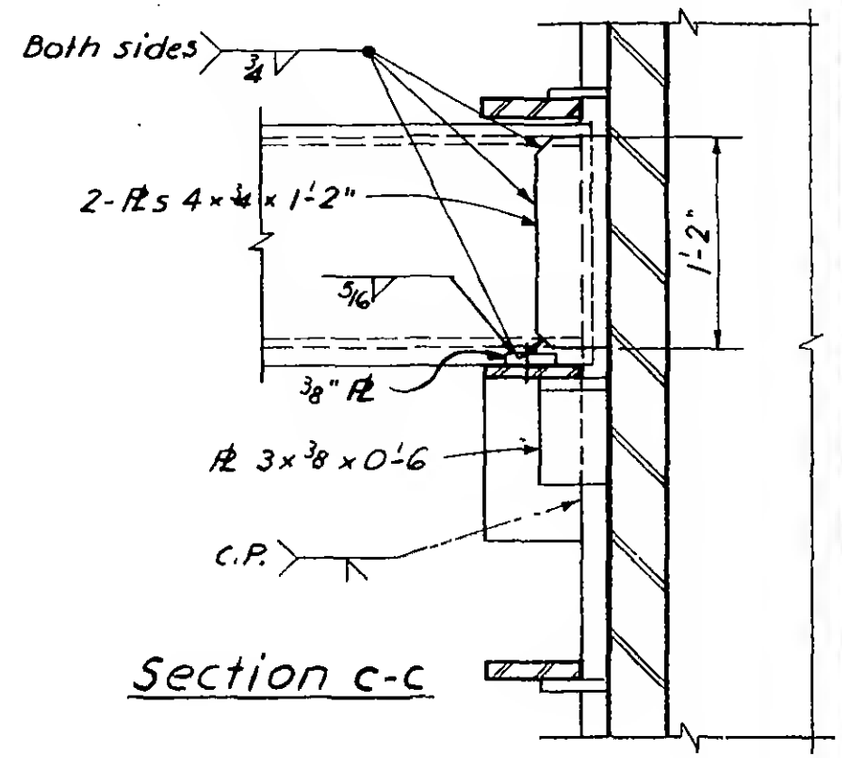

Section c-c

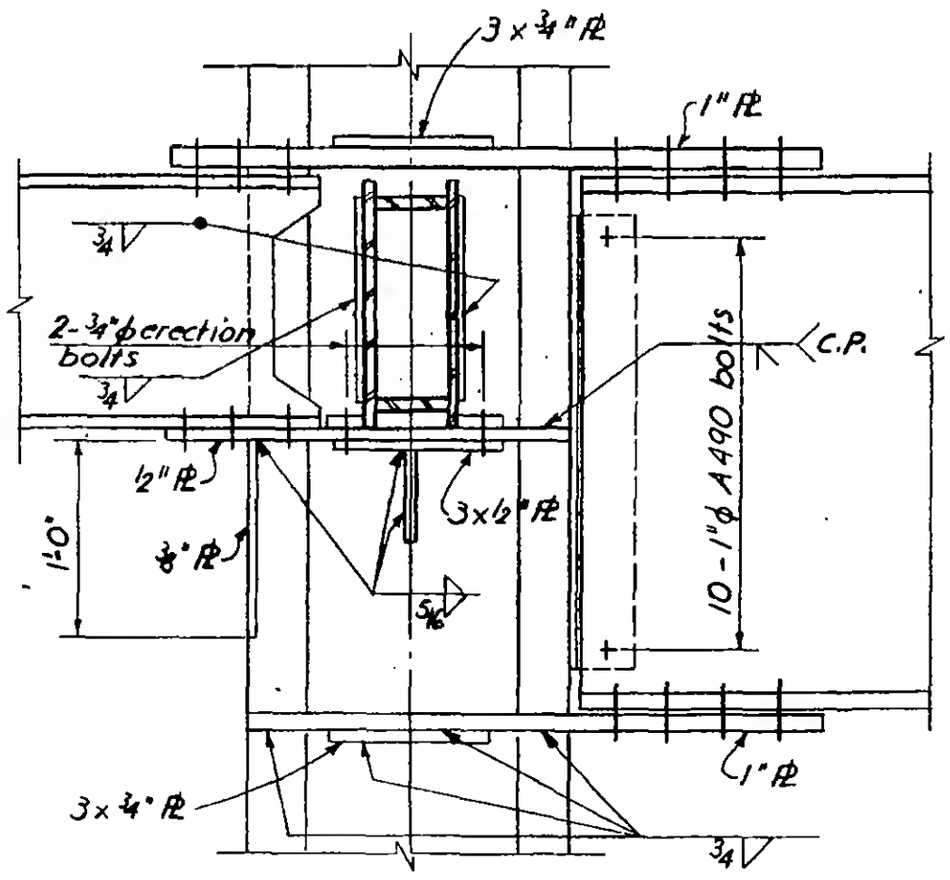

Section a-a

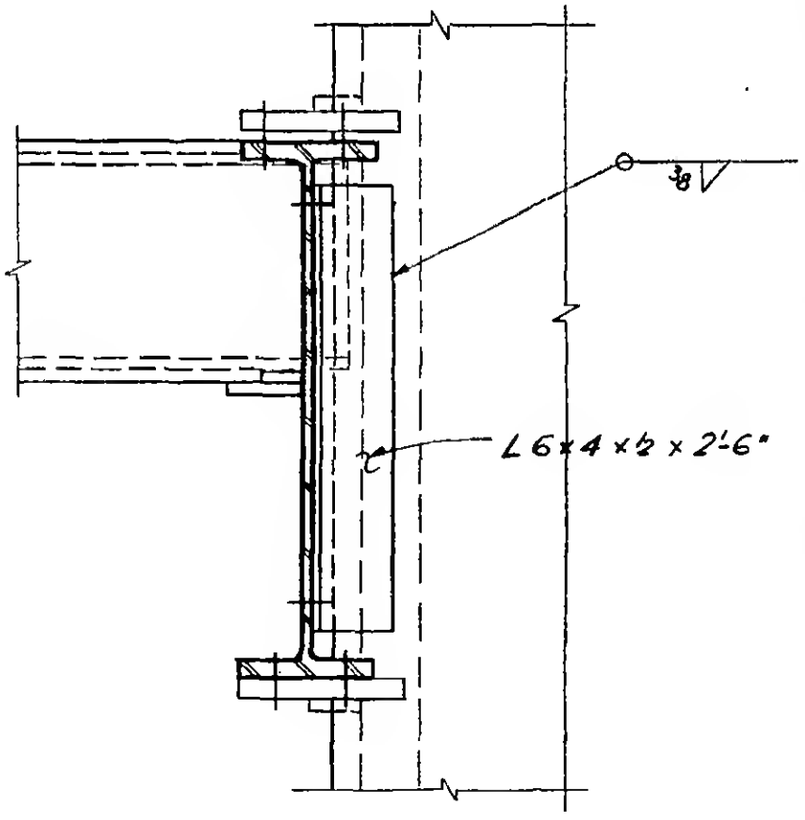

Section b-b

6-ABJ-59.3

LICENSED PROFESSIONAL ENGINEER
LESLIE E. ROBERTSON
No. 34360
UNIVERSITY OF THE STATE OF NEW YORK

WORTHINGTON, SKILLING, HELLE & JACKSON — Civil & Structural Engineers

PROJECT: THE WORLD TRADE CENTER | TITLE: CONNECTION DETAIL 255 A | DATE: 5-1-67

REVISIONS
-28-67
12-7-67

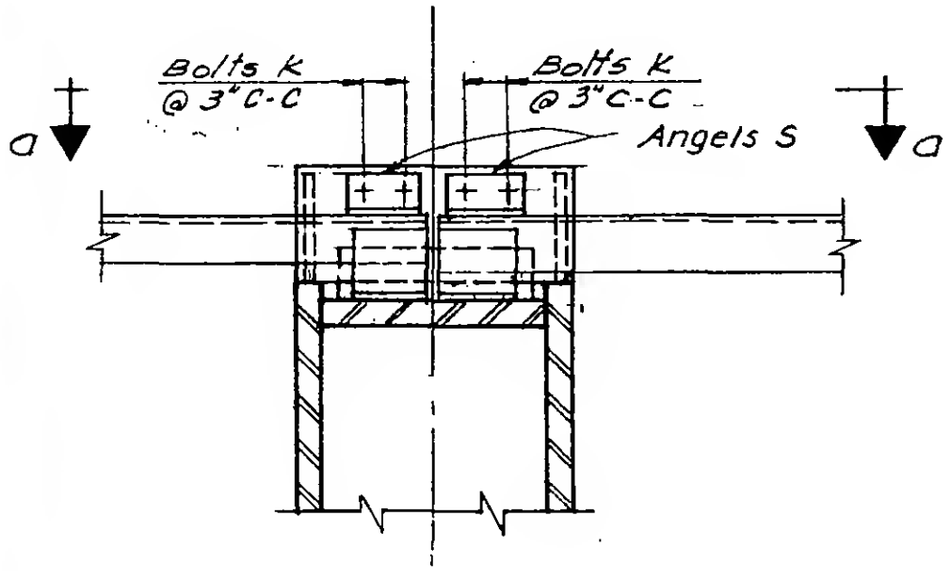

Plan

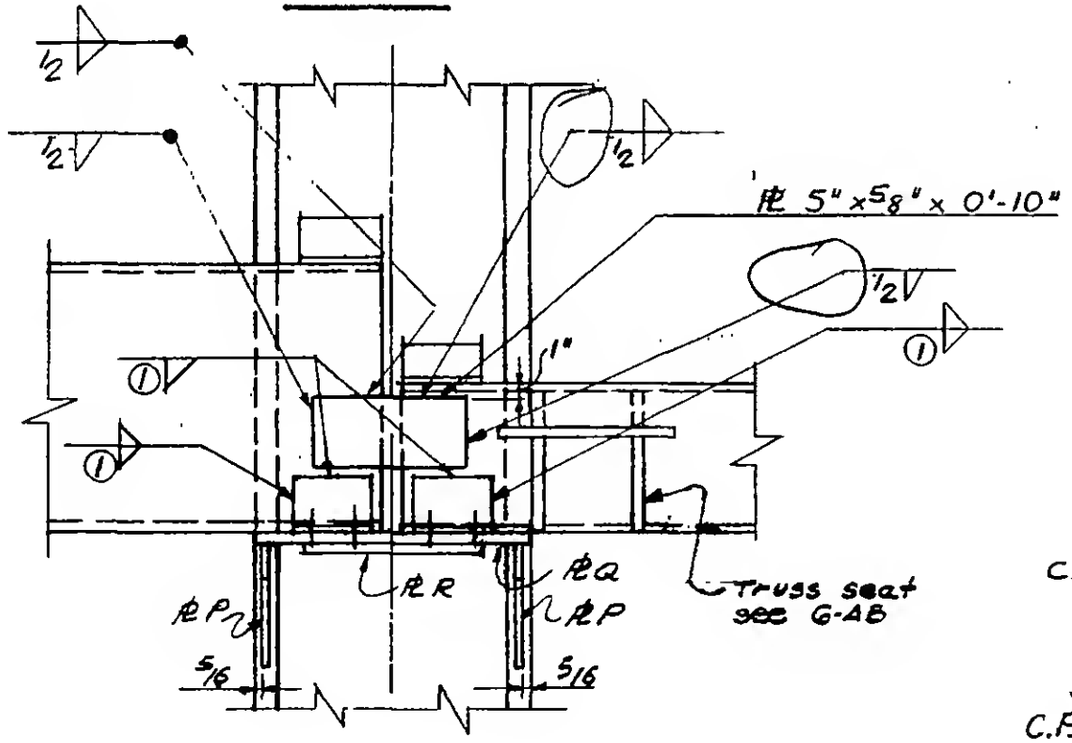

Section a-a

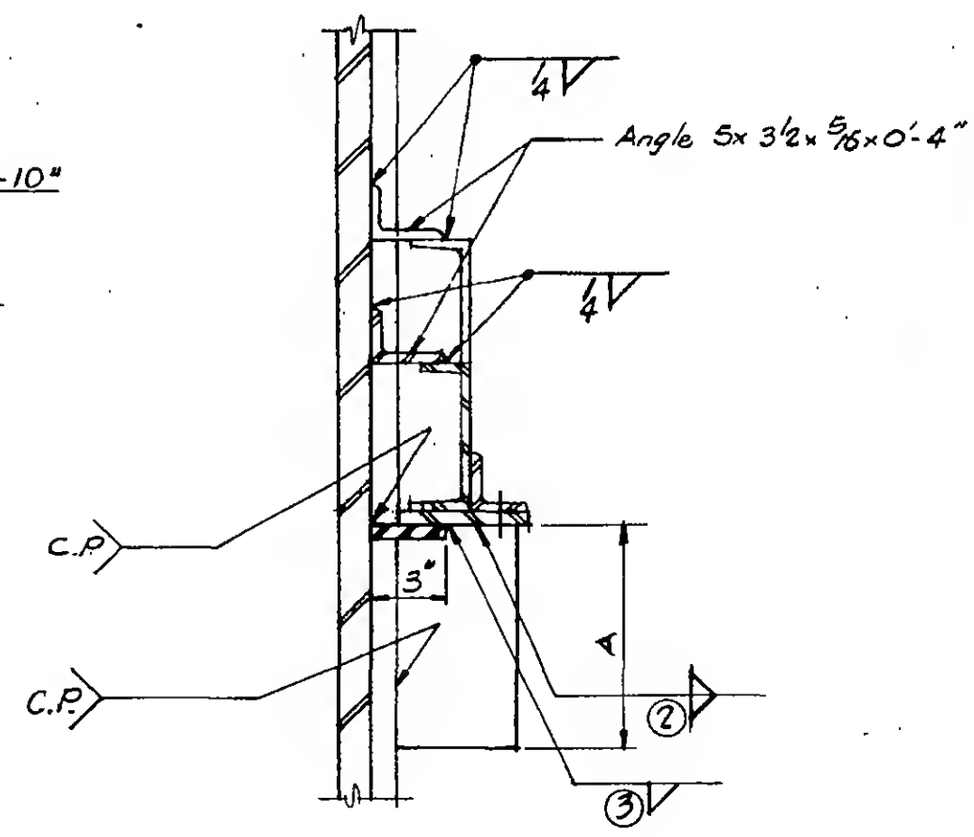

Section b-b

6-AB1-60

LICENSED PROFESSIONAL ENGINEER LESLIE E. ROBERTSON No. 24360 UNIVERSITY OF THE STATE OF NEW YORK

WORTHINGTON, SKILLING, HELLE & JACKSON — Civil & Structural Engineers

PROJECT: THE WORLD TRADE CENTER | TITLE: SCHEDULE FOR DETAIL 255 A | DATE: 7-28-[illegible]

REVISIONS

	255 A
Plates	
PL P	6" × 3/4"
PL Q	8 1/4 × 3/4
PL R	5/8 × 0'-7"
Angles	
S	3 × 3 × 3/8
Dimension	
A	1'-3"
Bolts	
K	2 - 7/8" ϕ
Welds	
①	5/16
②	1/4
③	5/16

LICENSED PROFESSIONAL ENGINEER LESLIE E. ROBERTSON No. 34360 STATE OF NEW YORK

6-AB1-60.1

SKILLING - HELLE - CHRISTIANSEN - ROBERTSON Structural & Civil Engineers

PROJECT THE WORLD TRADE CENTER | TITLE CONNECTION DETAIL 257A | DATE 6-5-67

REVISIONS

1-23-67

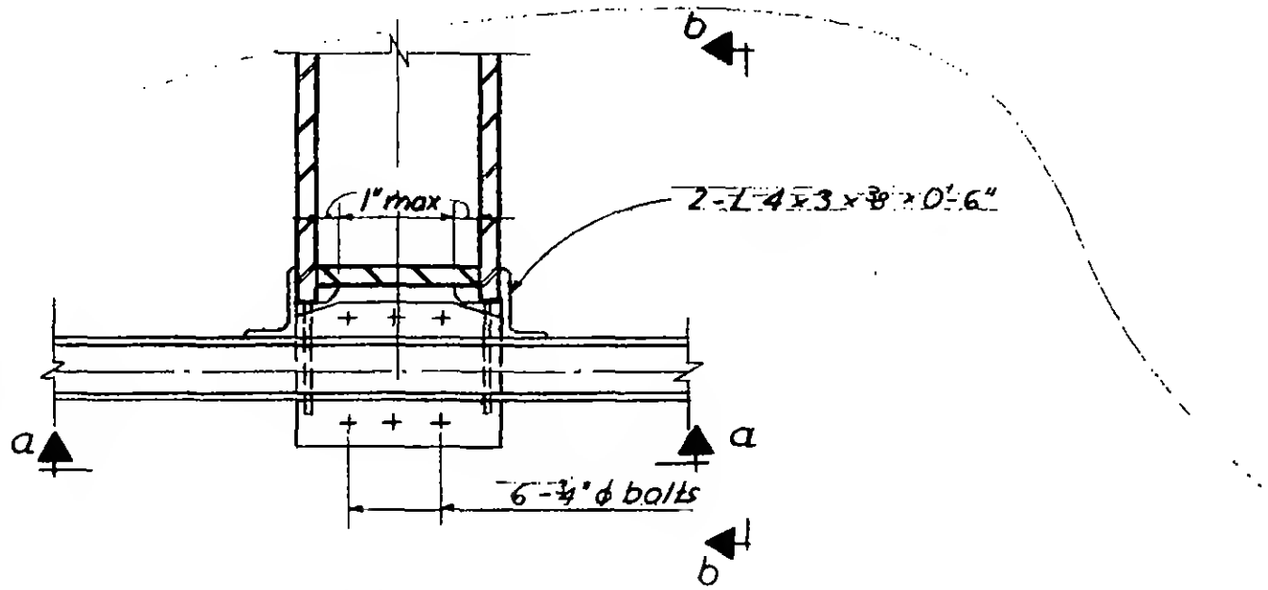

Plan

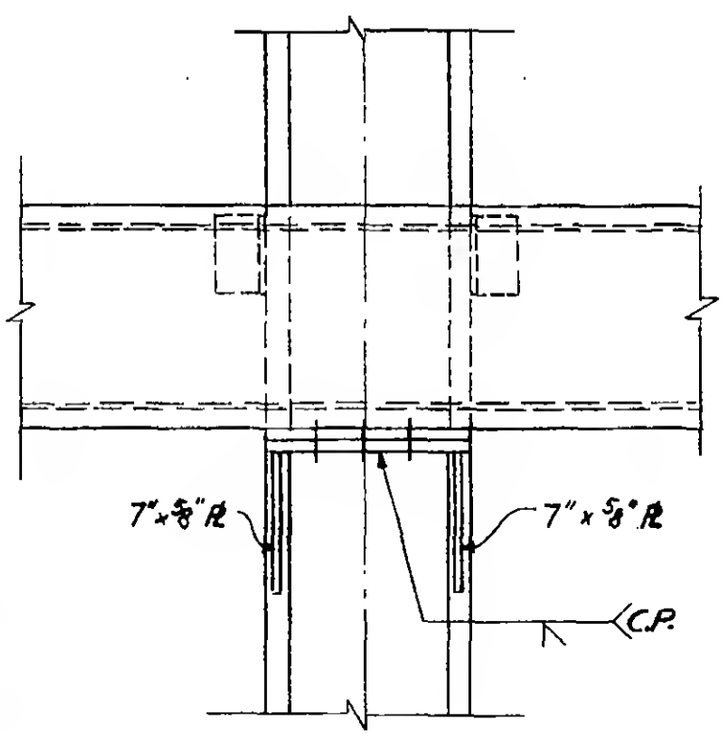

Section a-a

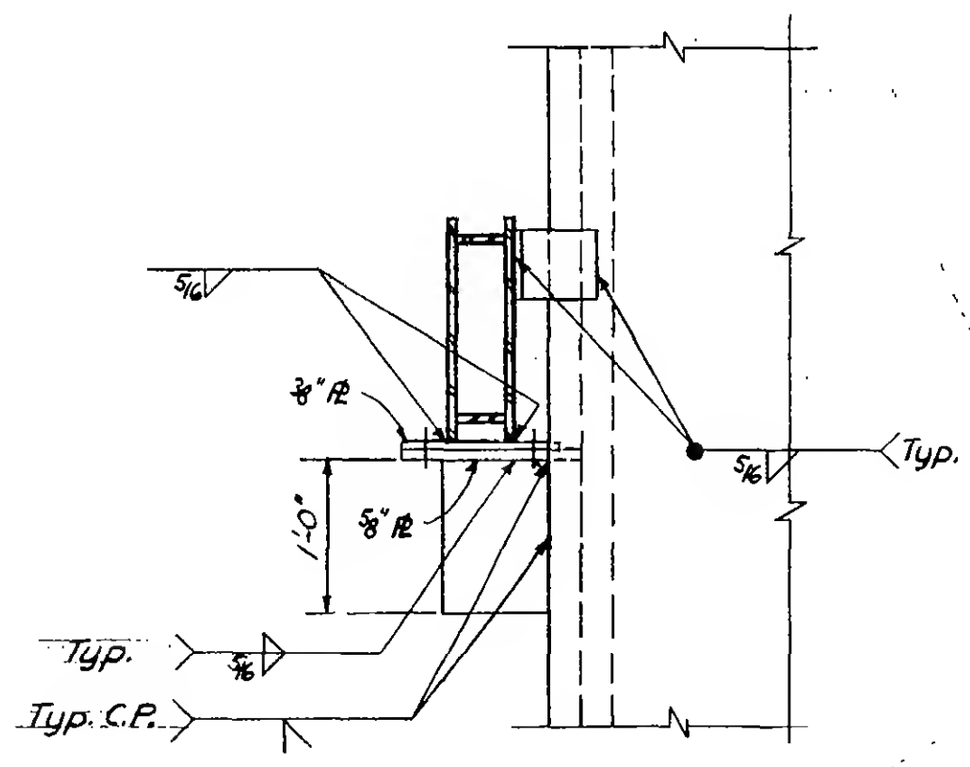

Section b-b

LICENSED PROFESSIONAL ENGINEER
LESLIE E. ROBERTSON
No. 34360
UNIVERSITY OF THE STATE OF NEW YORK

6-AB1-62

SKILLING - HELLE - CHRISTIANSEN - ROBERTSON Structural & Civil Engineers

PROJECT THE WORLD TRADE CENTER | TITLE CONNECTION DETAIL 257-B | DATE 11-23-67

REVISIONS

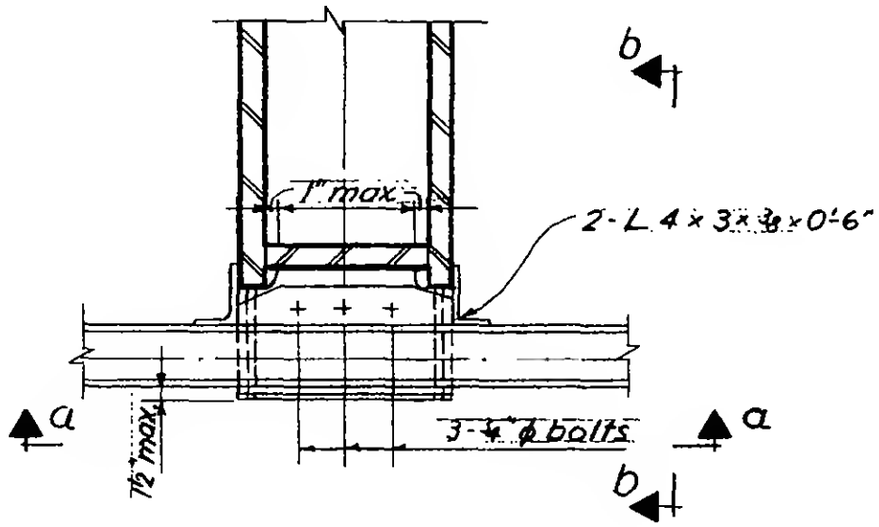

Plan

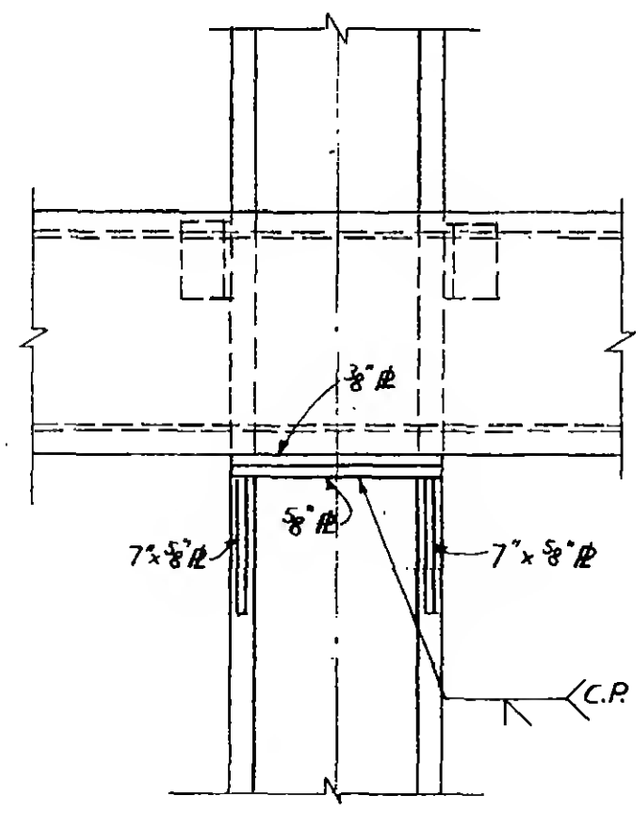

Section a-a

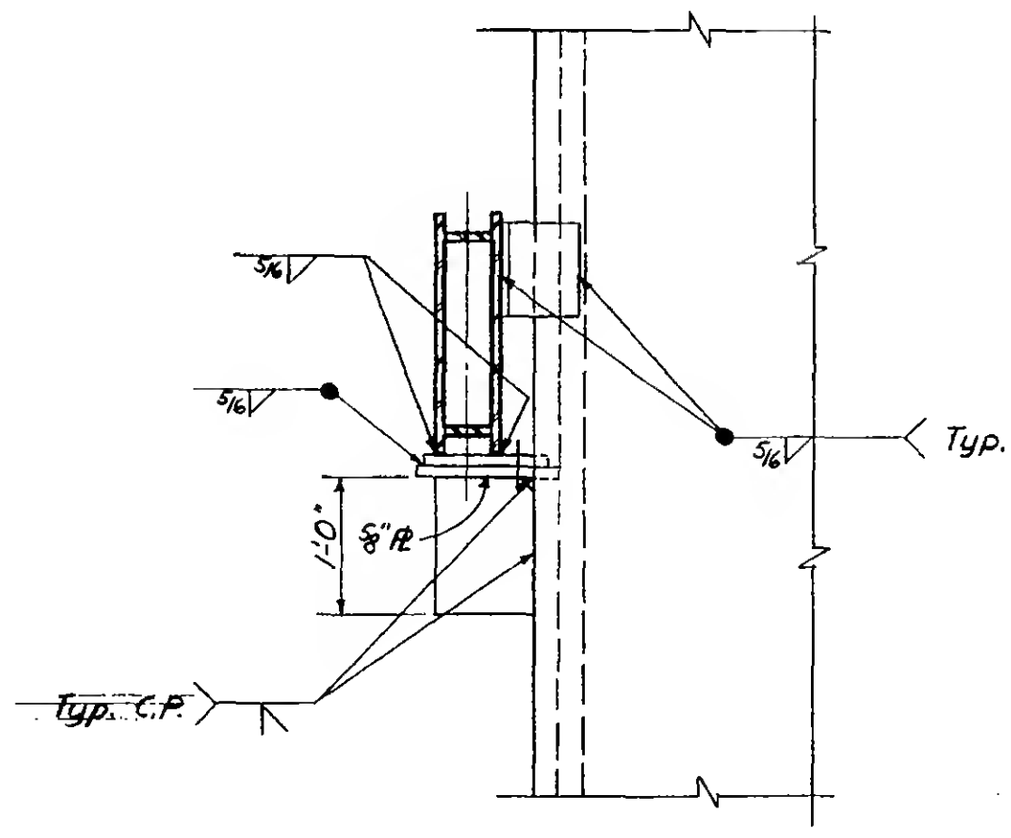

Section b-b

LICENSED PROFESSIONAL ENGINEER
LESLIE E. ROBERTSON
No. 34360
UNIVERSITY OF THE STATE OF NEW YORK

6-AB1-62.1

SKILLING - HELLE - CHRISTIANSEN - ROBERTSON Structural & Civil Engineers

PROJECT: THE WORLD TRADE CENTER | TITLE: CONNECTION DETAIL 258 A, B | DATE: 6-5-67

REVISIONS

1-23-67

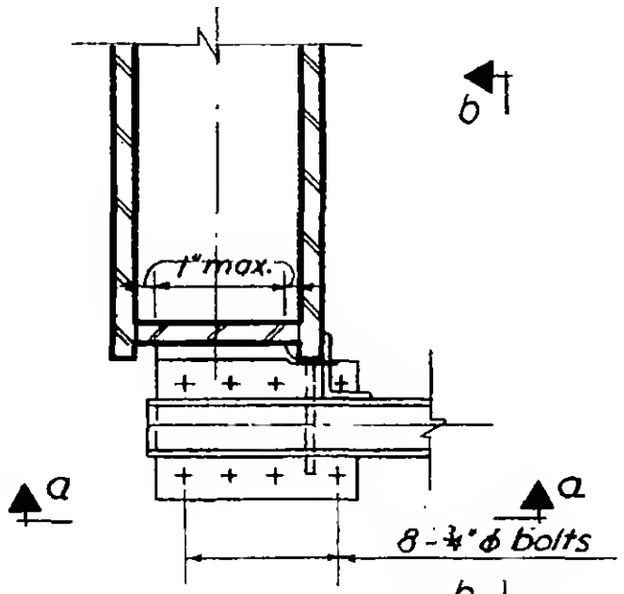

Plan

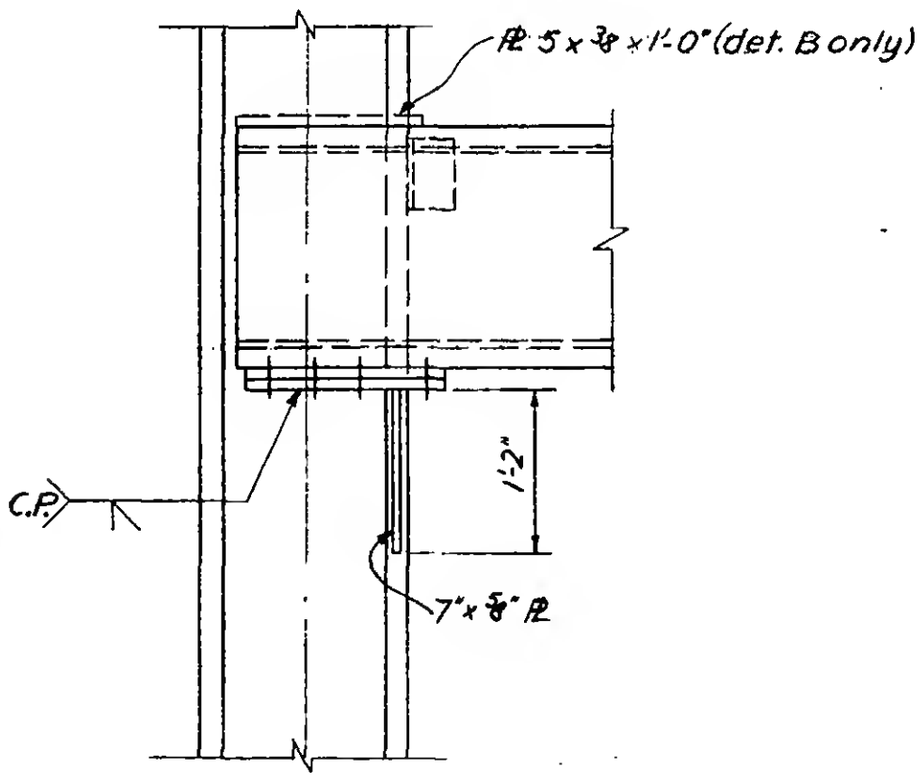

Section a-a

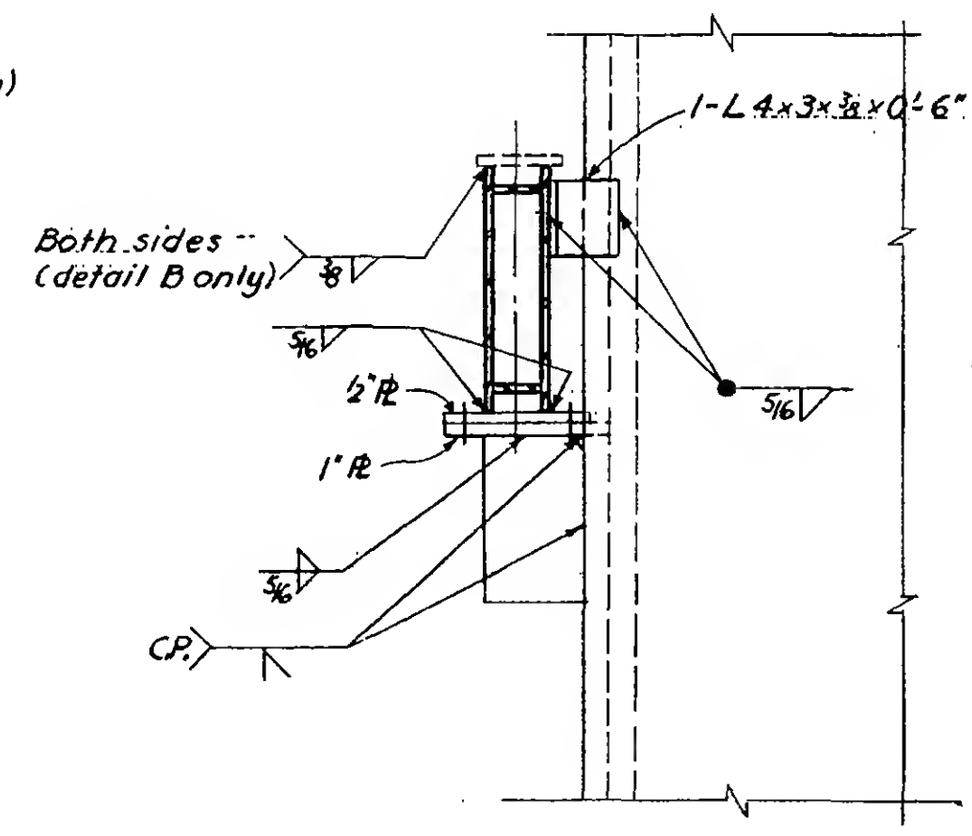

Section b-b

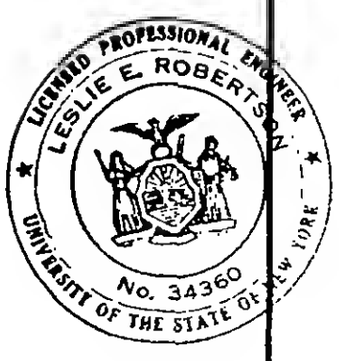

6-AB1-63

SKILLING - HELLE - CHRISTIANSEN - ROBERTSON Structural & Civil Engineers

PROJECT THE WORLD TRADE CENTER | TITLE CONNECTION DETAIL 2594 | DATE 6-5-63

REVISIONS

11-23-67

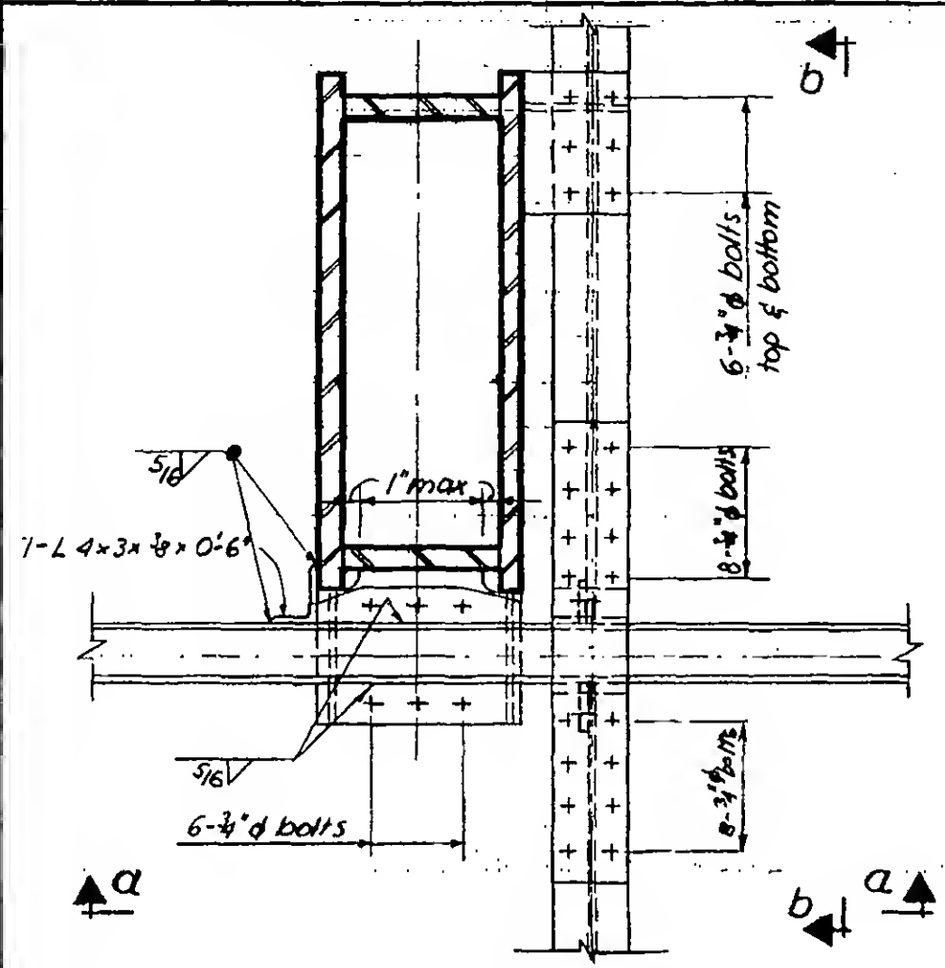

Plan

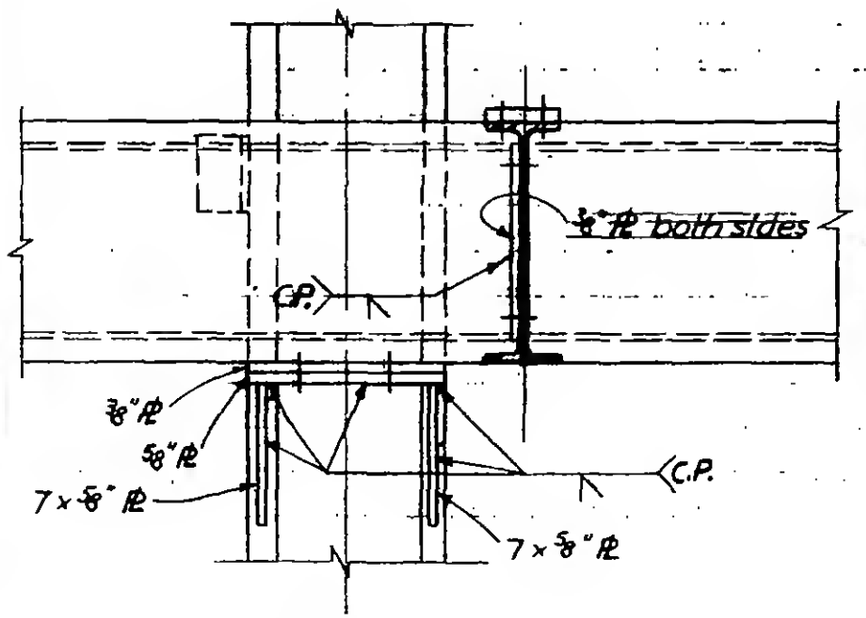

Section a-a

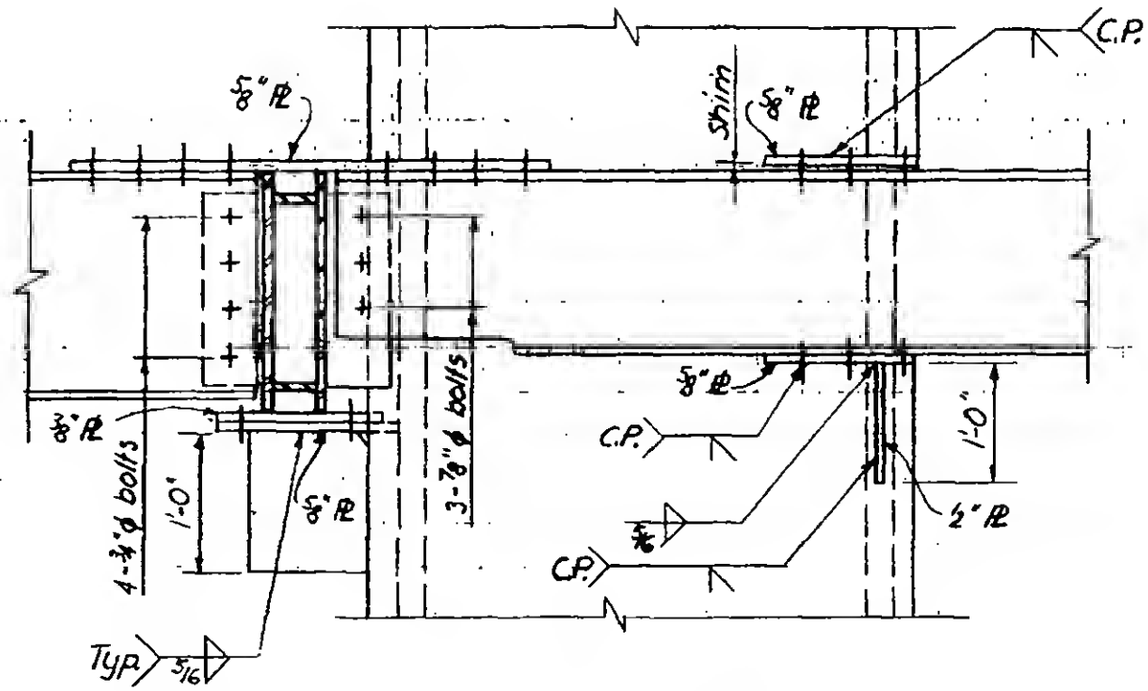

Section b-b

6-AB1-64

WORTHINGTON, SKILLING, HELLE & JACKSON — Civil & Structural Engineers

PROJECT: THE WORLD TRADE CENTER | TITLE: CONNECTION DETAIL - 260 A, B & D | DATE: 6-5-67

REVISIONS
7-5-67
7-28-67
10-2-67

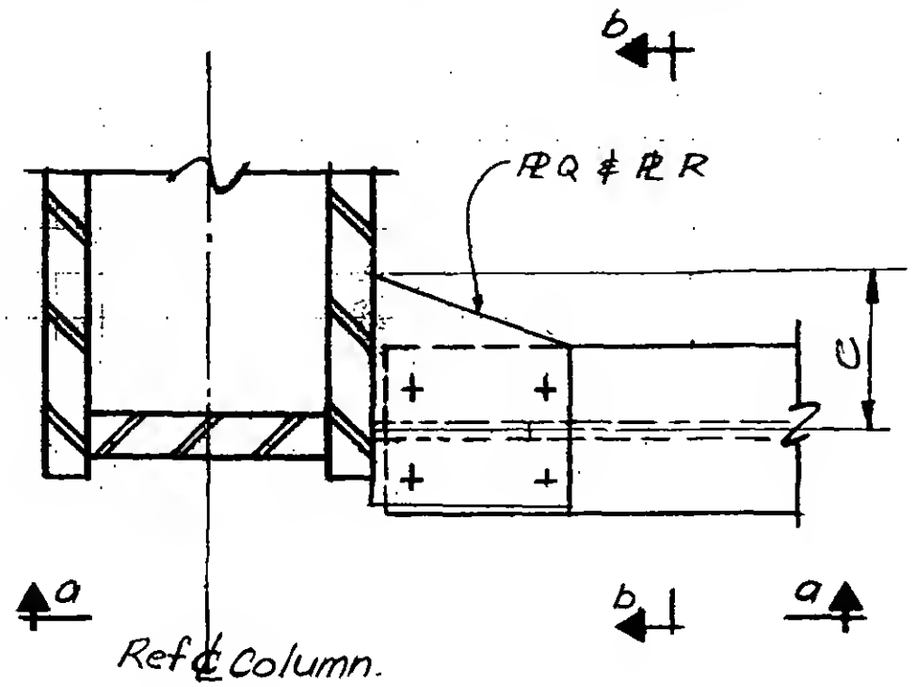

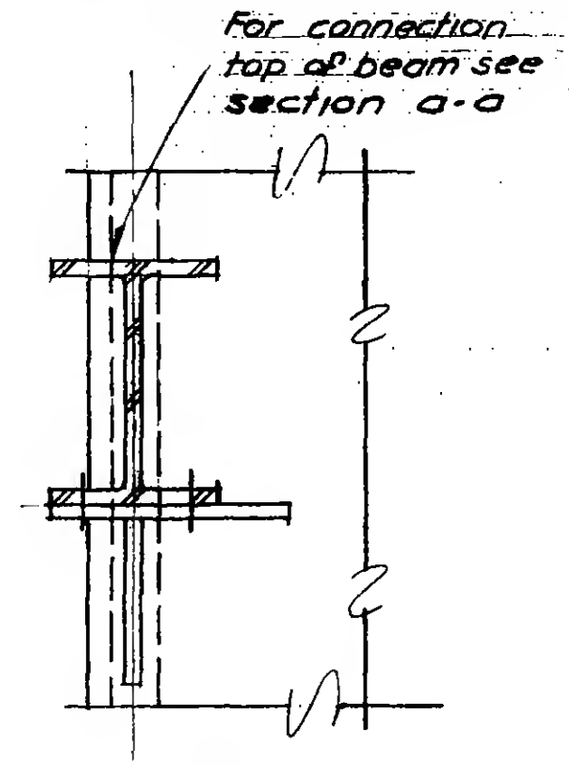

Section b-b

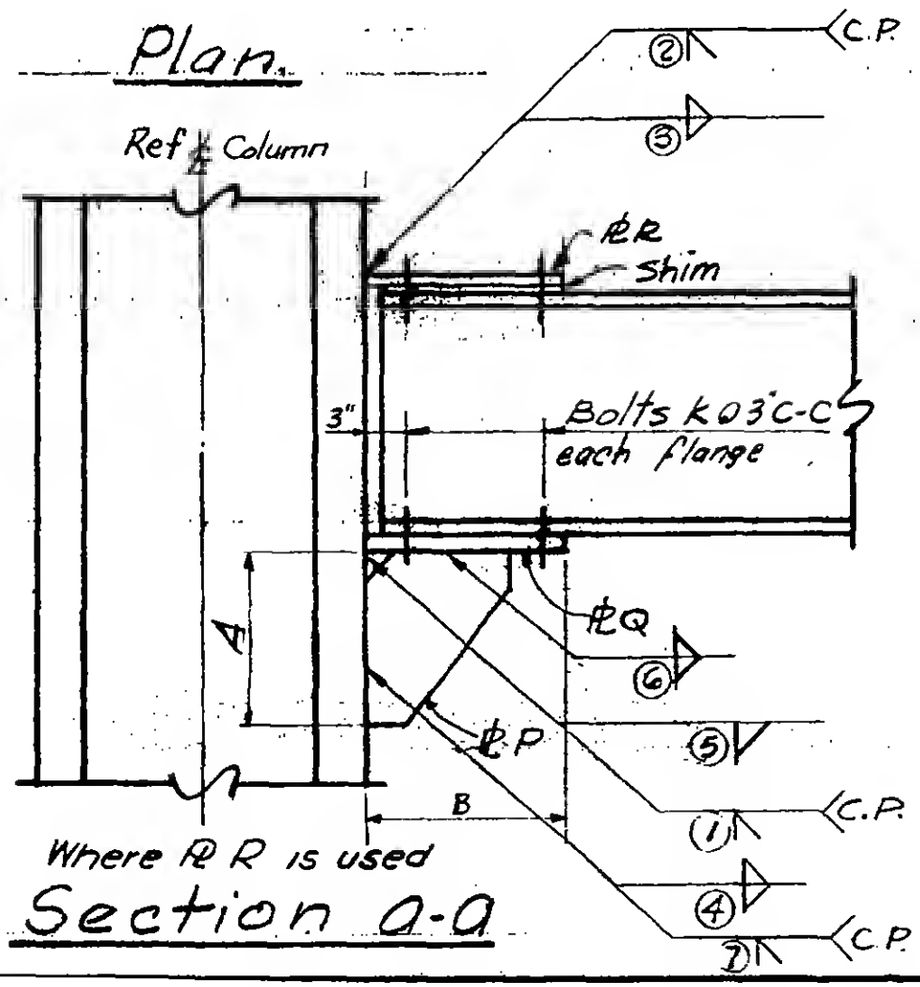

Where PL R is used

Section a-a

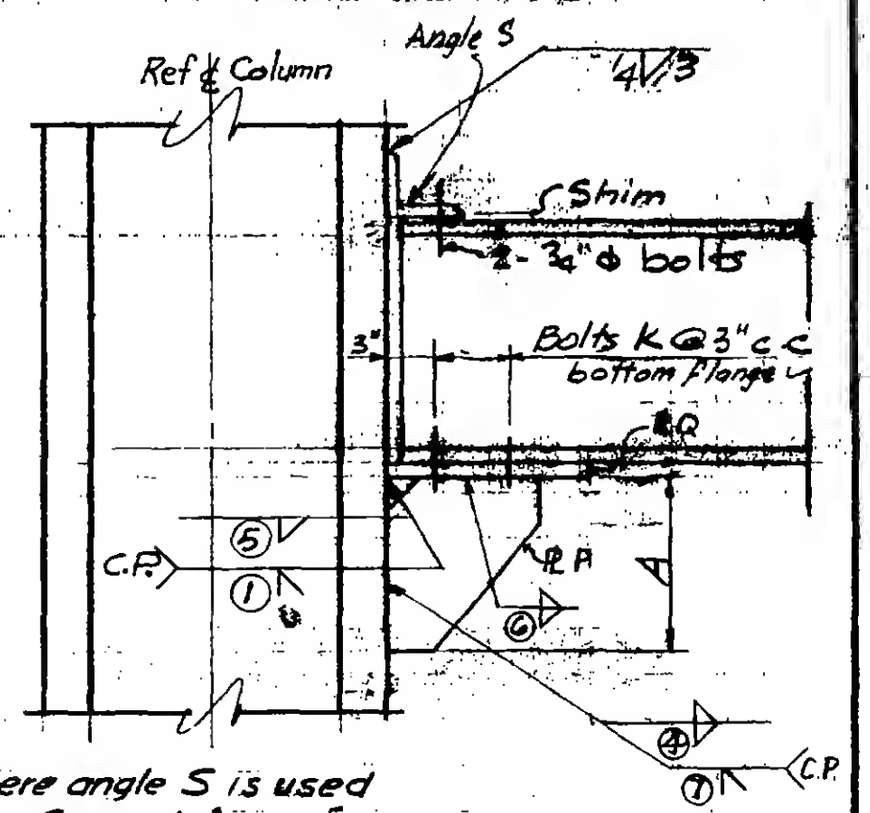

Where angle S is used

Section a-a

6 - AB1 - 65

SKILLING - HELLE - CHRISTIANSEN - ROBERTSON Structural & Civil Engineers

PROJECT: THE WORLD TRADE CENTER | TITLE: SCHEDULE FOR DETAIL 260 A, B, D | DATE: 7-5-67

REVISIONS
1-28-67
10-2-67

	260 A	260 B		260 D		
PLATES						
P	5" x 3/8"	5" x 3/8"		5" x 1/2"		
Q	3/8"	3/8"		1/2"		
R	—	—		—		
ANGLES						
S	4 x 3 x 5/16	4 x 3 x 5/16		4 x 3 x 5/16		
DIMENSIONS						
A	1'-0"	0'-9"		1'-1"		
B	—	—		—		
C	0'-4"	0'-4"		0'-5"		
BOLTS						
K	4 - 3/4" ϕ	4 - 3/4" ϕ		4 - 3/4" ϕ		
WELDS						
1	—	—		C.P.		
4	3/8	3/8		5/16		
5	3/8	3/8		—		
6	5/16	5/16		5/16		

LICENSED PROFESSIONAL ENGINEER
LESLIE E. ROBERTSON
No. 34360
UNIVERSITY OF THE STATE OF NEW YORK

6-AB1-65.1

WORTHINGTON, SKILLING, HELLE & JACKSON — Civil & Structural Engineers

PROJECT: THE WORLD TRADE CENTER | TITLE: CONNECTION DETAIL 260 C | DATE: 6-30-67

REVISIONS

7-28-67

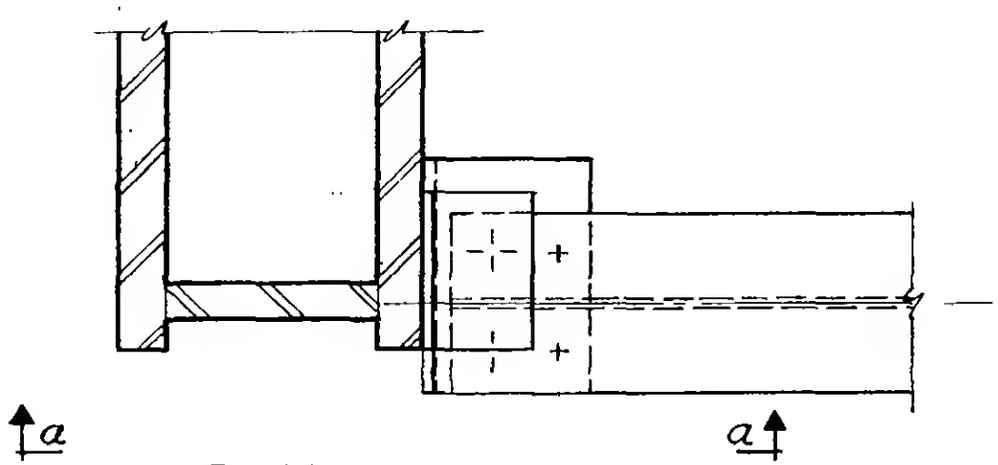

PLAN

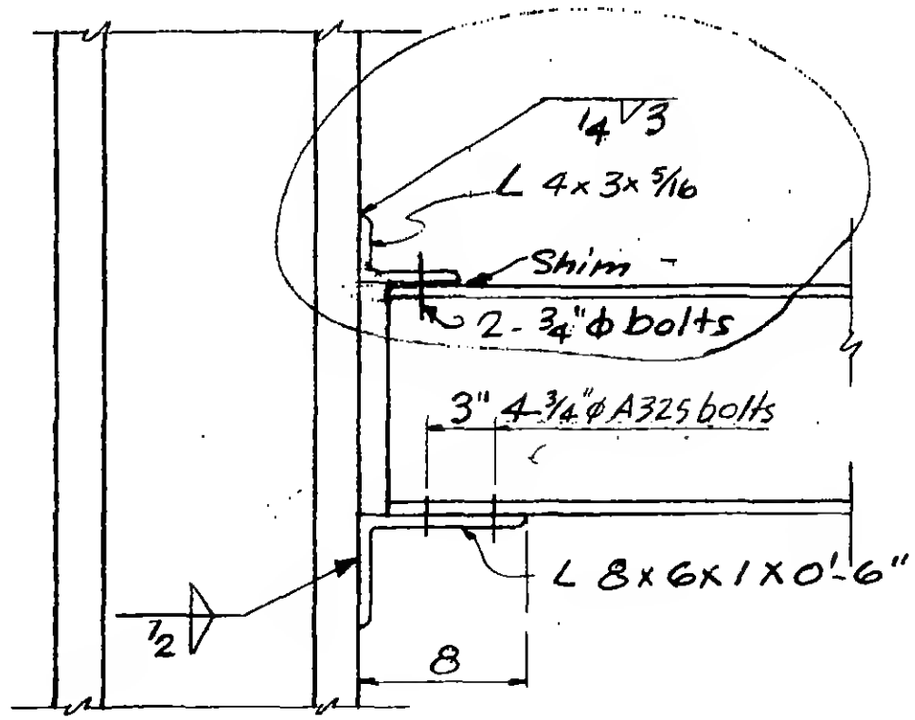

SECTION a-a

LICENSED PROFESSIONAL ENGINEER
LESLIE E. ROBERTSON
No. 34360
CITY OF THE STATE OF NEW YORK

6-AB1-65.3

SKILLING - HELLE - CHRISTIANSEN - ROBERTSON Structural & Civil Engineers

PROJECT THE WORLD TRADE CENTER | TITLE CONNECTION DETAIL 260E | DATE 4-17-68

REVISIONS

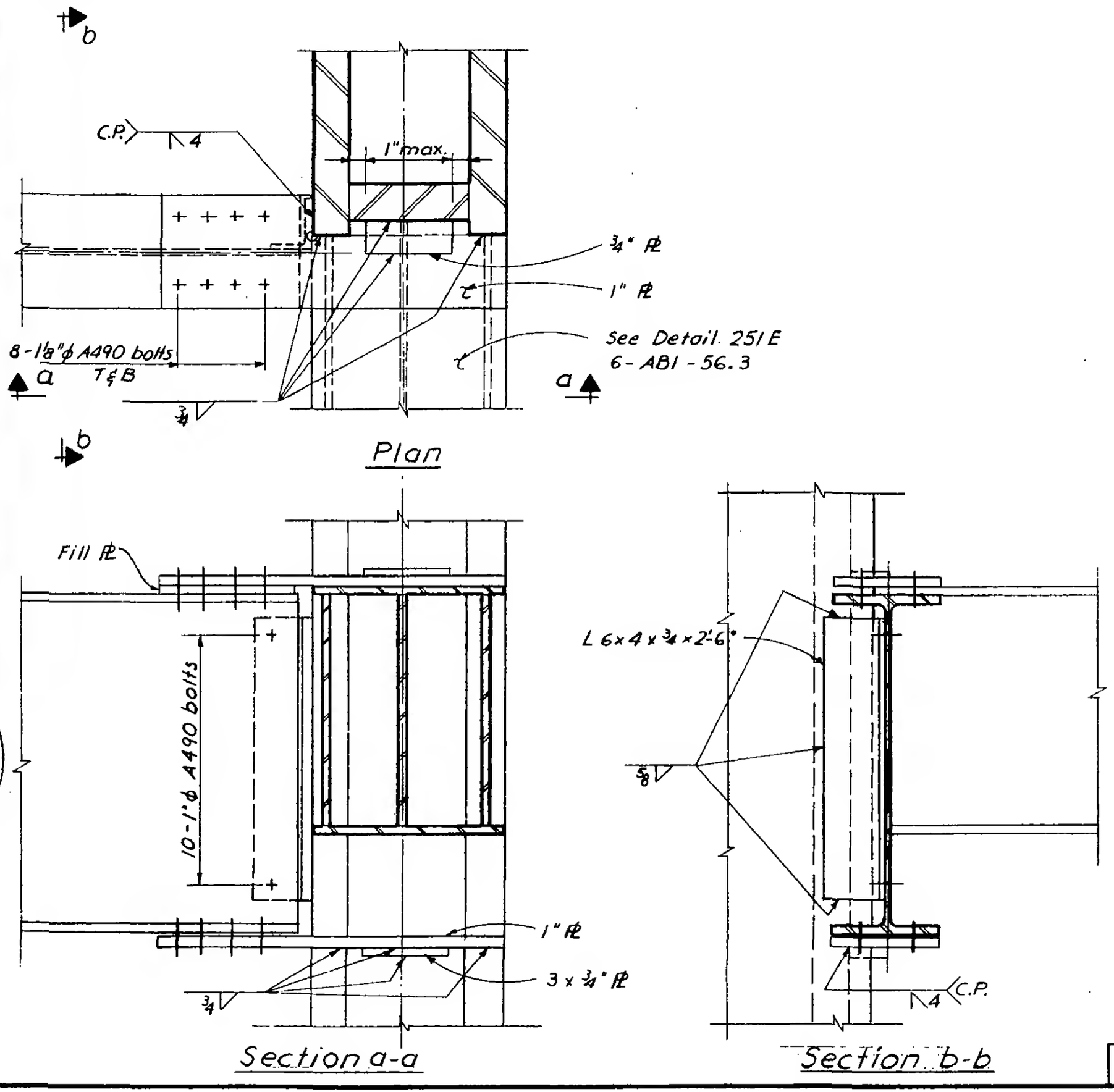

6-AB1-65.4

WORTHINGTON, SKILLING, HELLE & JACKSON — Civil & Structural Engineers

PROJECT: THE WORLD TRADE CENTER | TITLE: CONNECTION DETAIL 261 A | DATE: 6-19-67

REVISIONS: 8-5-67

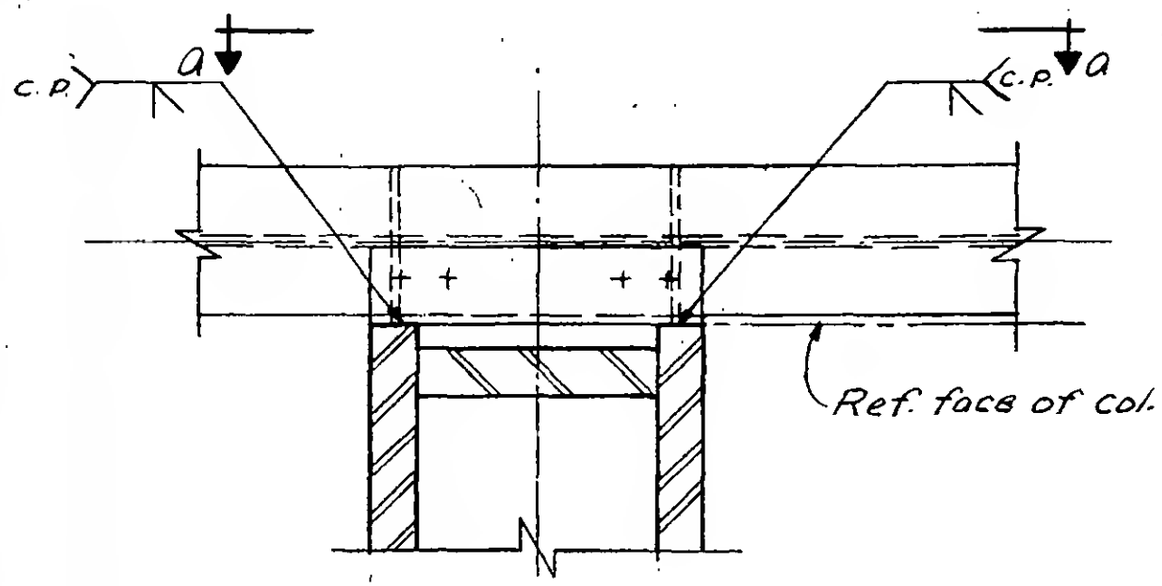

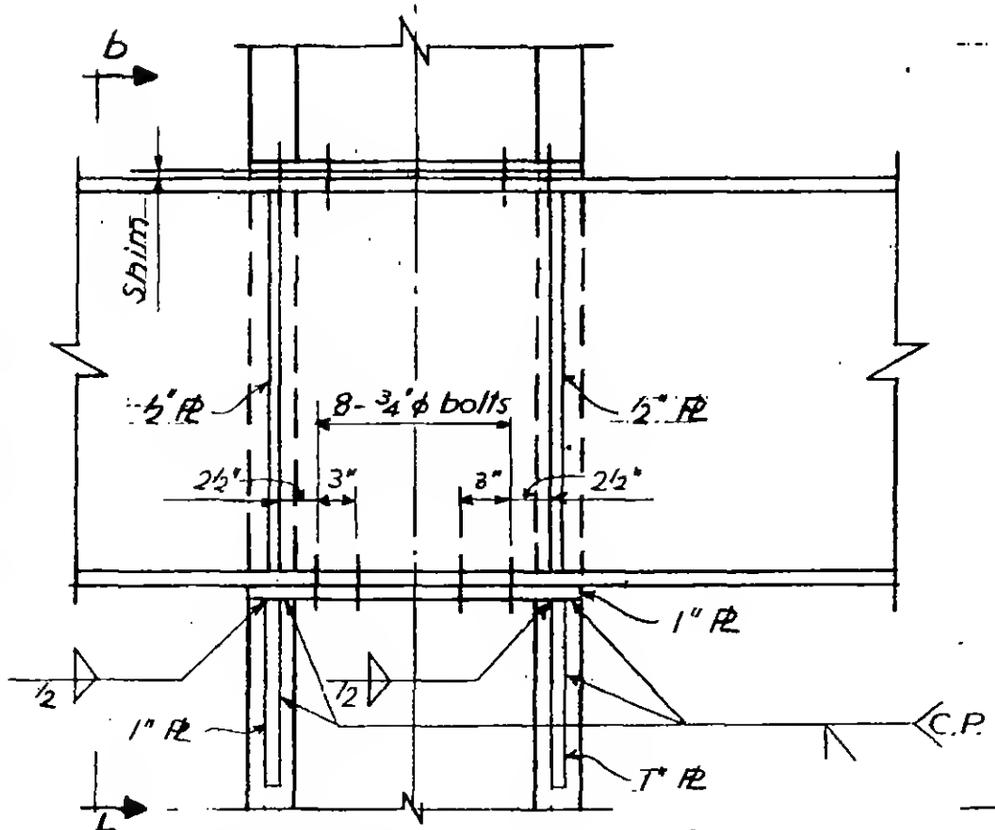

SECTION a-a

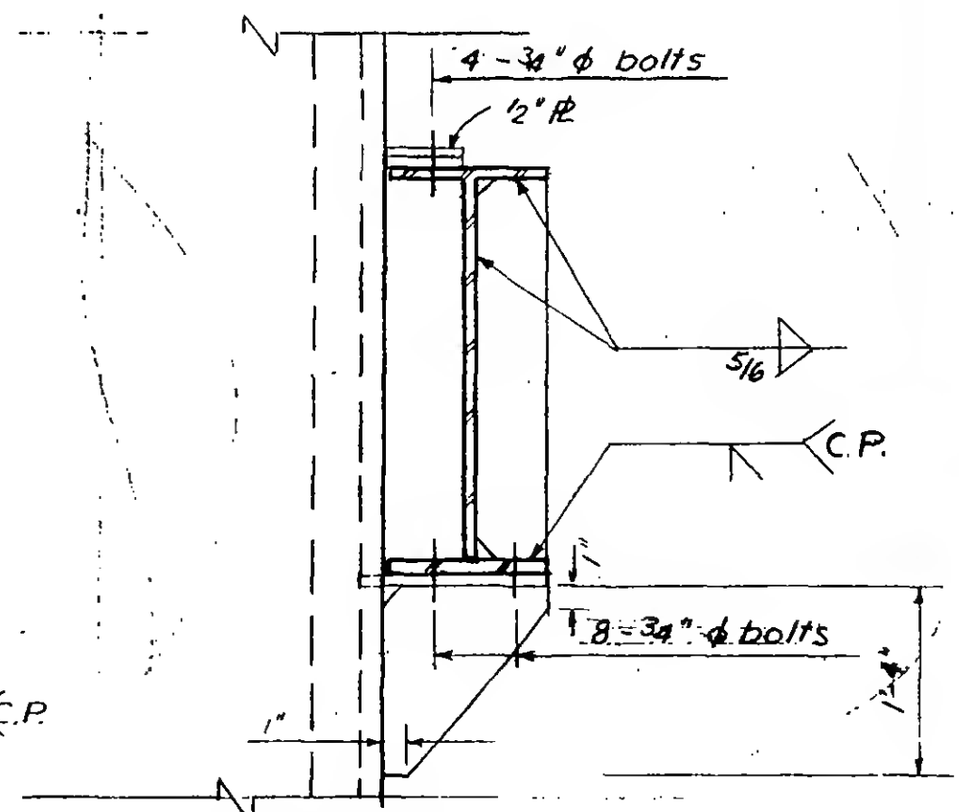

SECTION b-b

6-AB1-66

LICENSED PROFESSIONAL ENGINEER
LESLIE E. ROBERTSON
No. 34360
UNIVERSITY OF THE STATE OF NEW YORK

WORTHINGTON, SKILLING, HELLE & JACKSON — Civil & Structural Engineers

PROJECT	TITLE	DATE
THE WORLD TRADE CENTER	CONNECTION DETAIL 262 A	7/20/61

REVISIONS

10-5-67
10-31-67

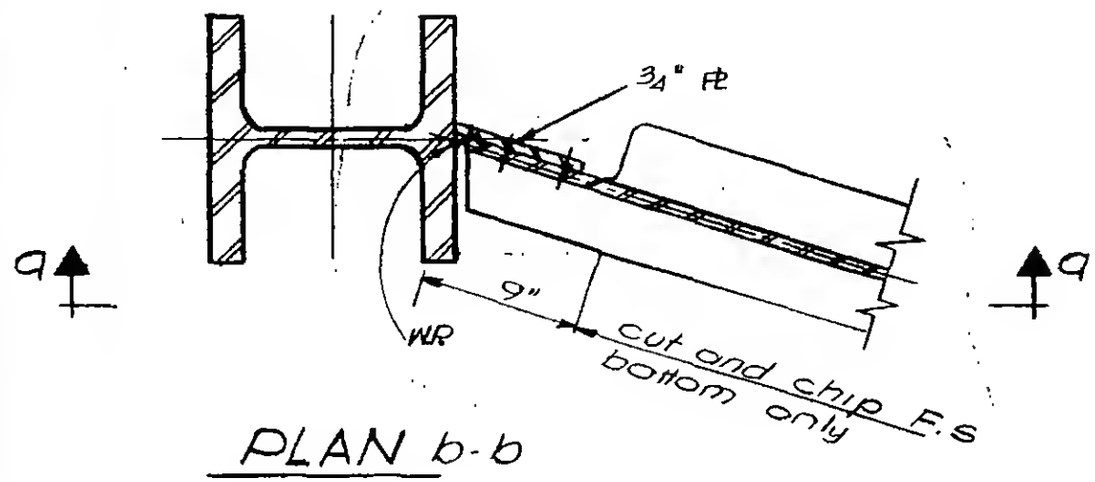

PLAN b-b

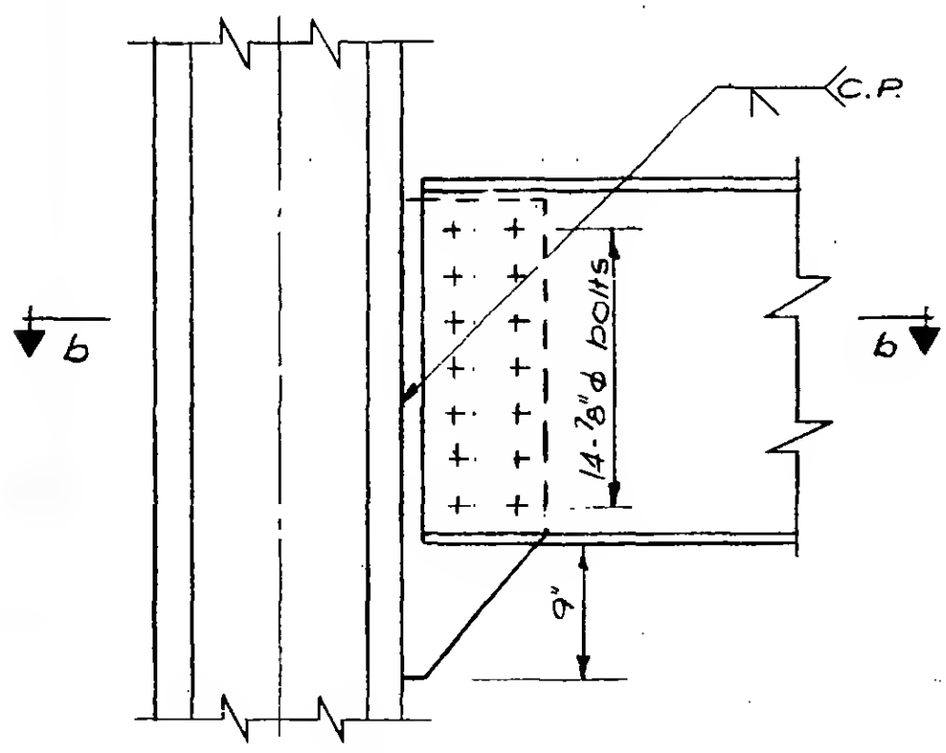

Section a-a

6-AB1-67

SKILLING - HELLE - CHRISTIANSEN - ROBERTSON Structural & Civil Engineers

PROJECT: THE WORLD TRADE CENTER | TITLE: CONNECTION DETAIL 263 A | DATE: 11-28-67

REVISIONS

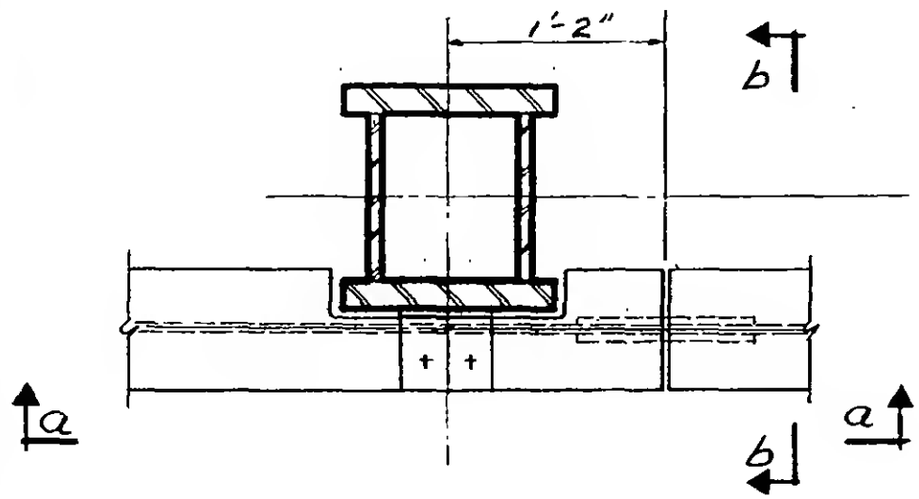

Plan

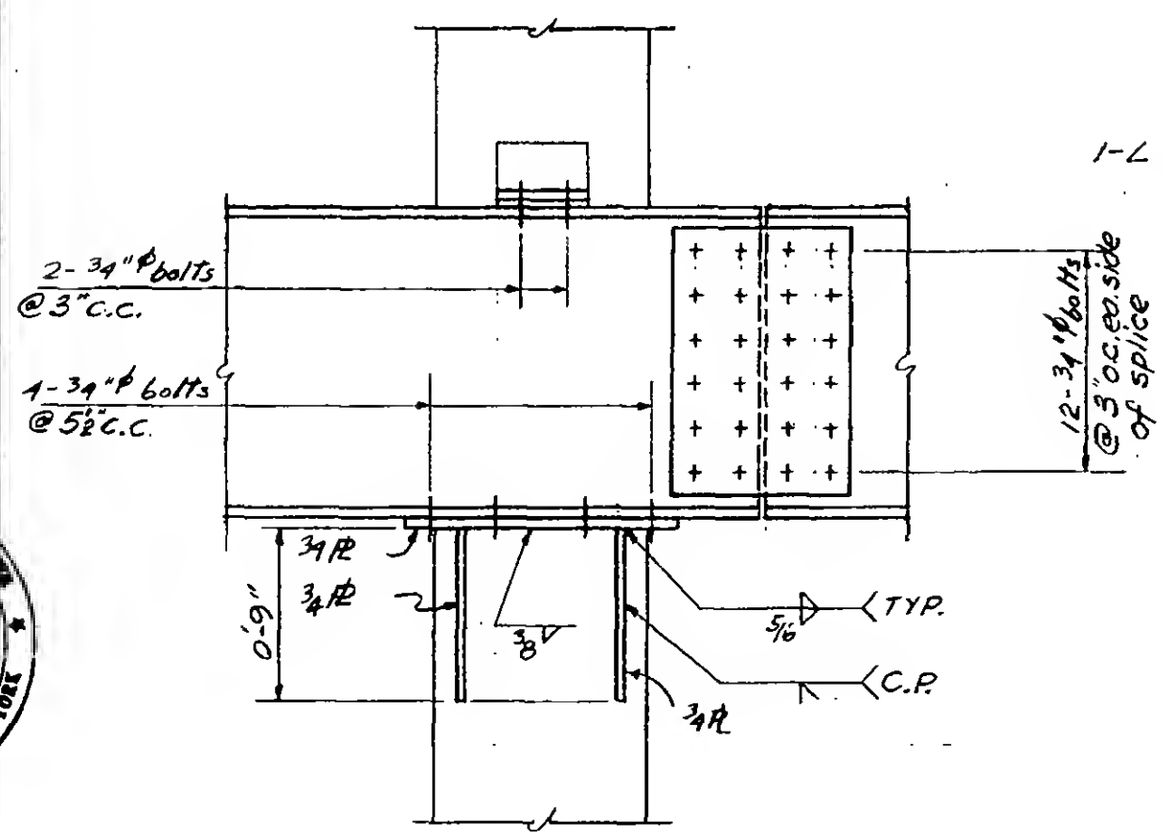

Section a-a

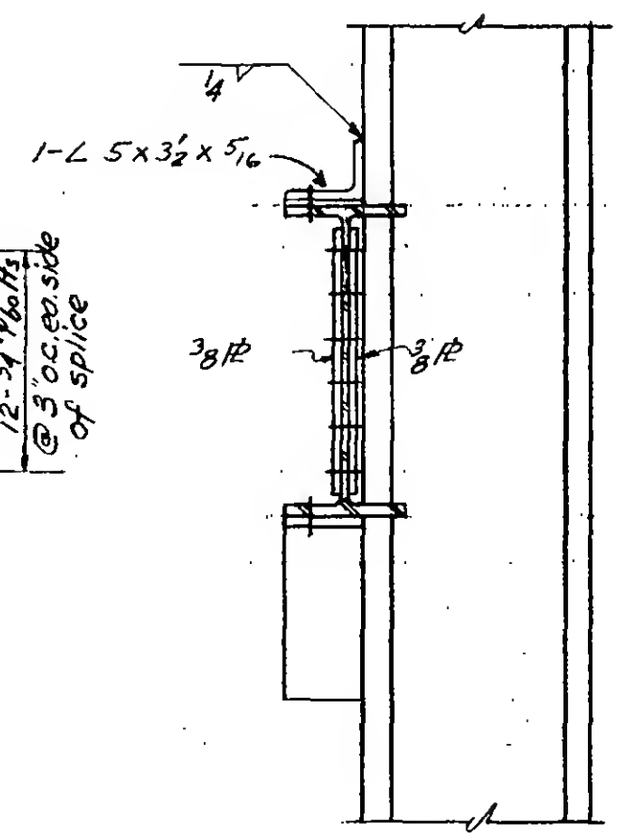

Section b-b

6-AB1-68

LICENSED PROFESSIONAL ENGINEER
LESLIE E. ROBERTSON
No. 34960
UNIVERSITY OF THE STATE OF NEW YORK

SKILLING - HELLE - CHRISTIANSEN - ROBERTSON — Structural & Civil Engineers

PROJECT THE WORLD TRADE CENTER | TITLE CONNECTION DETAIL | DATE 6-30-67

REVISIONS

10-5-67

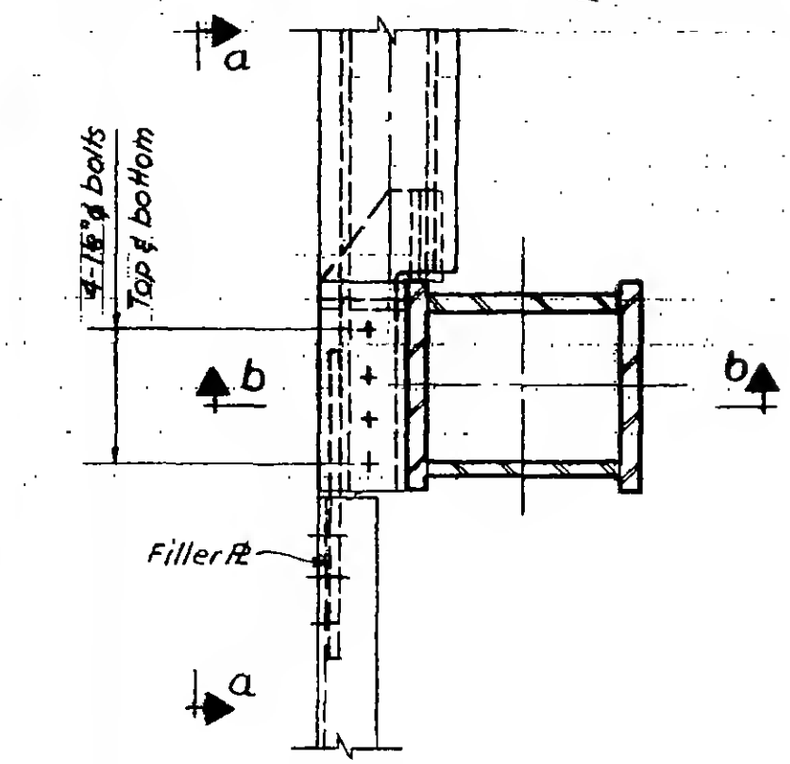

Plan

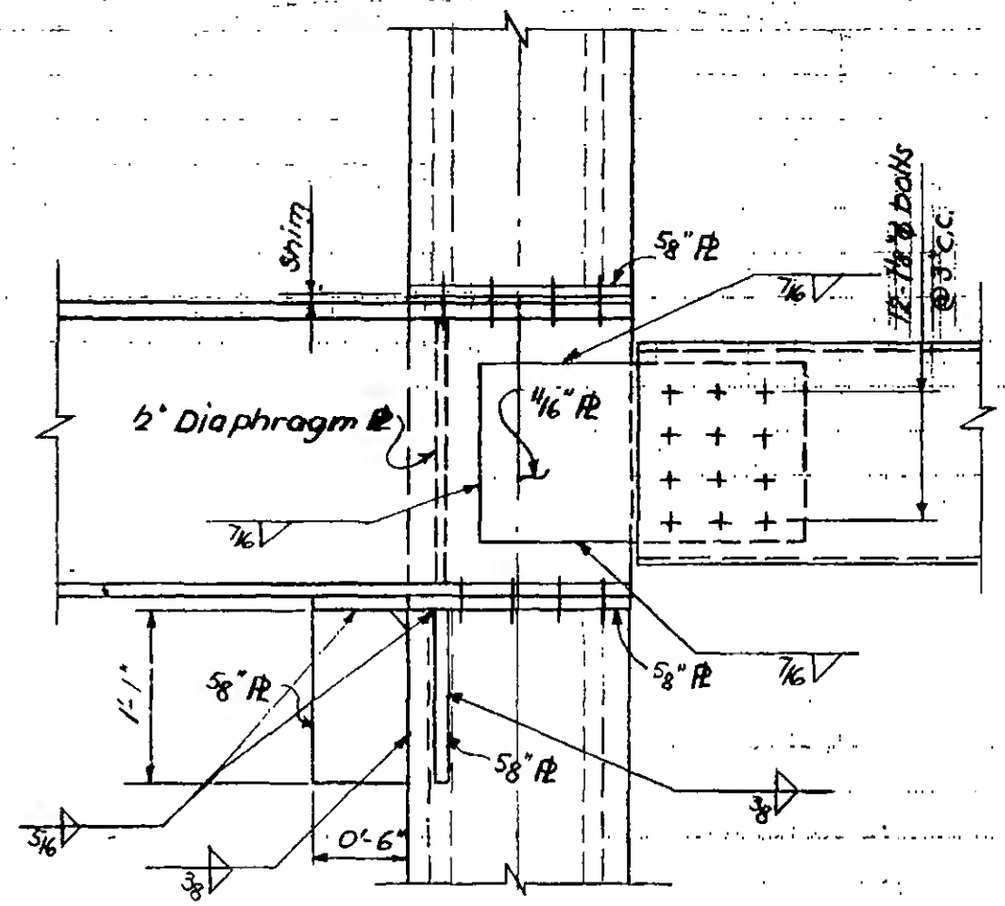

Section a-a

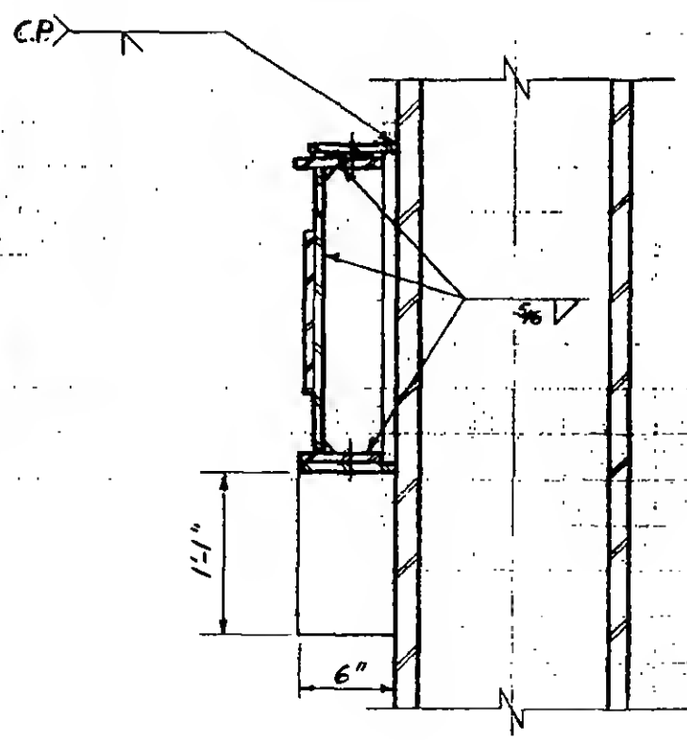

Section b-b

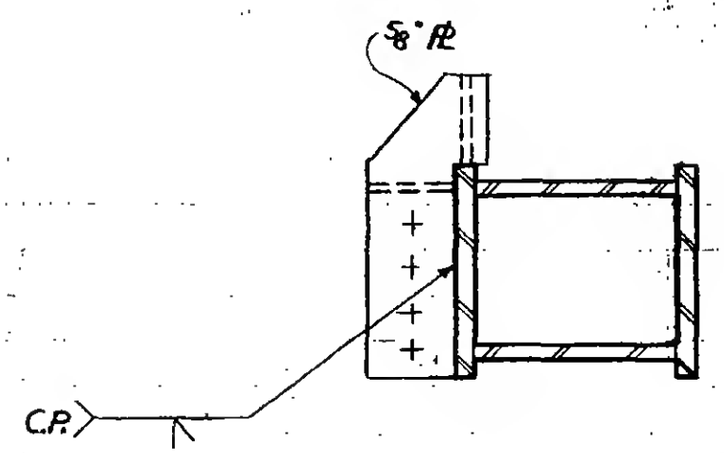

Seat Plate detail

6-AB1-69

WORTHINGTON, SKILLING, HELLE & JACKSON — Civil & Structural Engineers

PROJECT: [illegible] | TITLE: [illegible] A B | DATE: [illegible]

REVISIONS

7-28-67

10-2-67

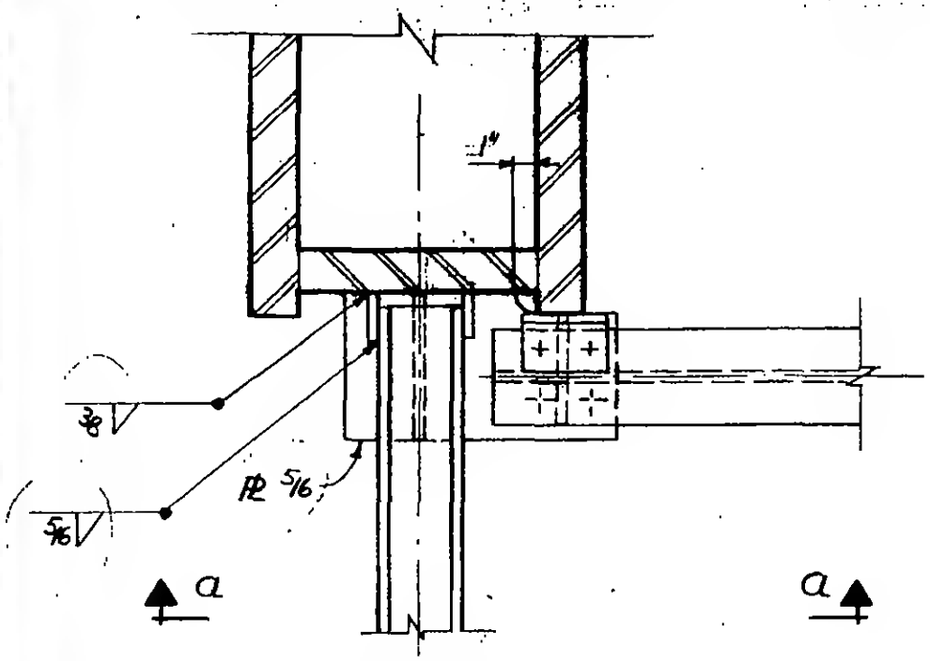

Plan
Detail 265 A

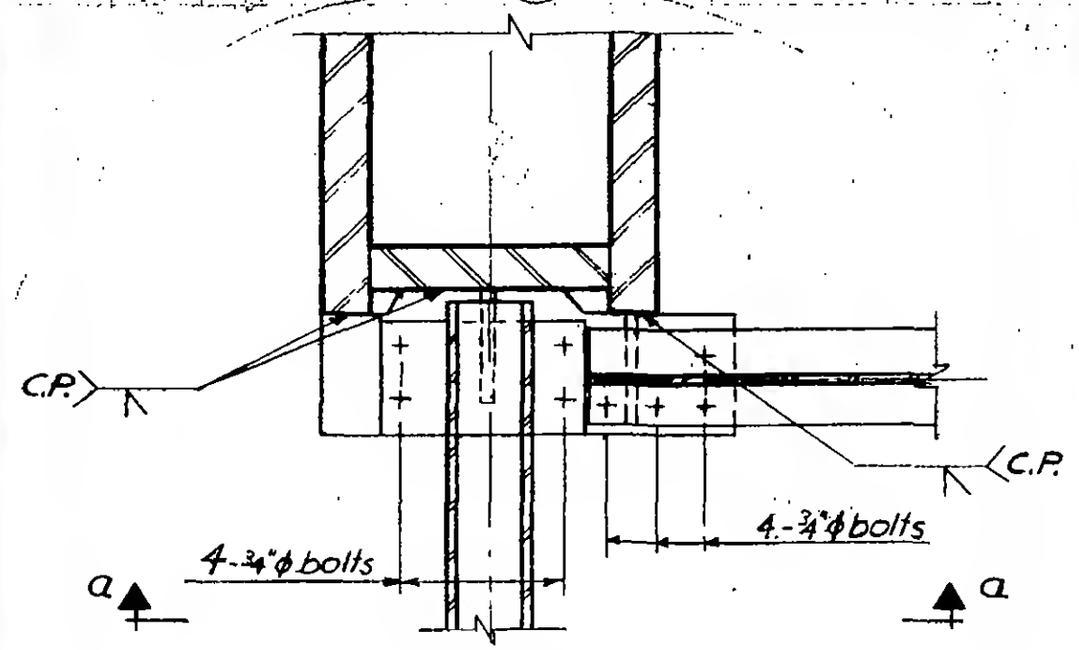

Plan b-b
Detail 265 B

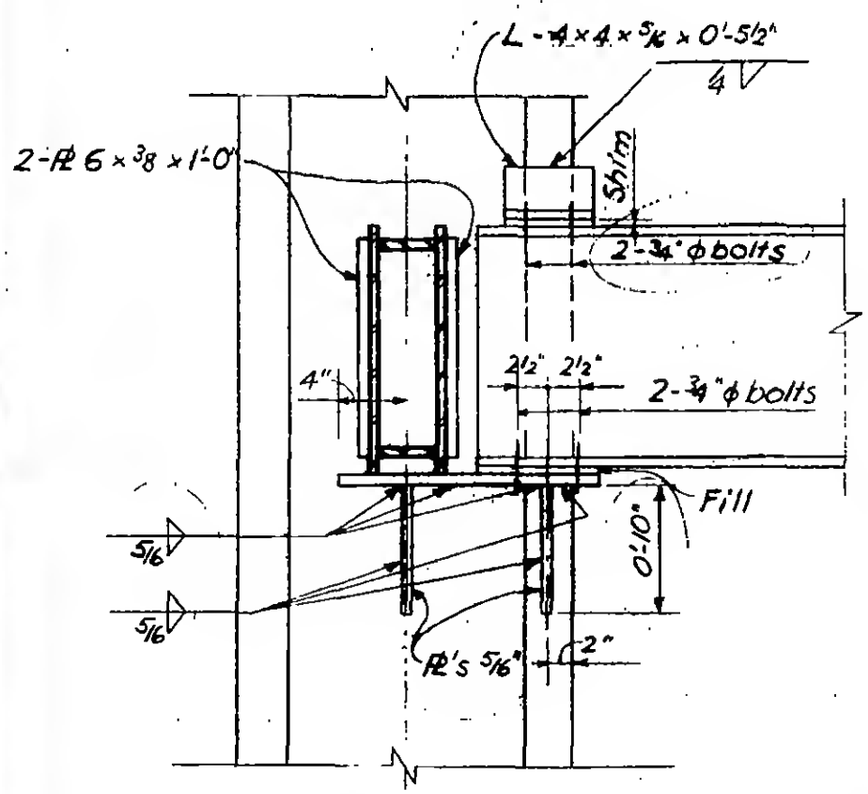

Section a-a

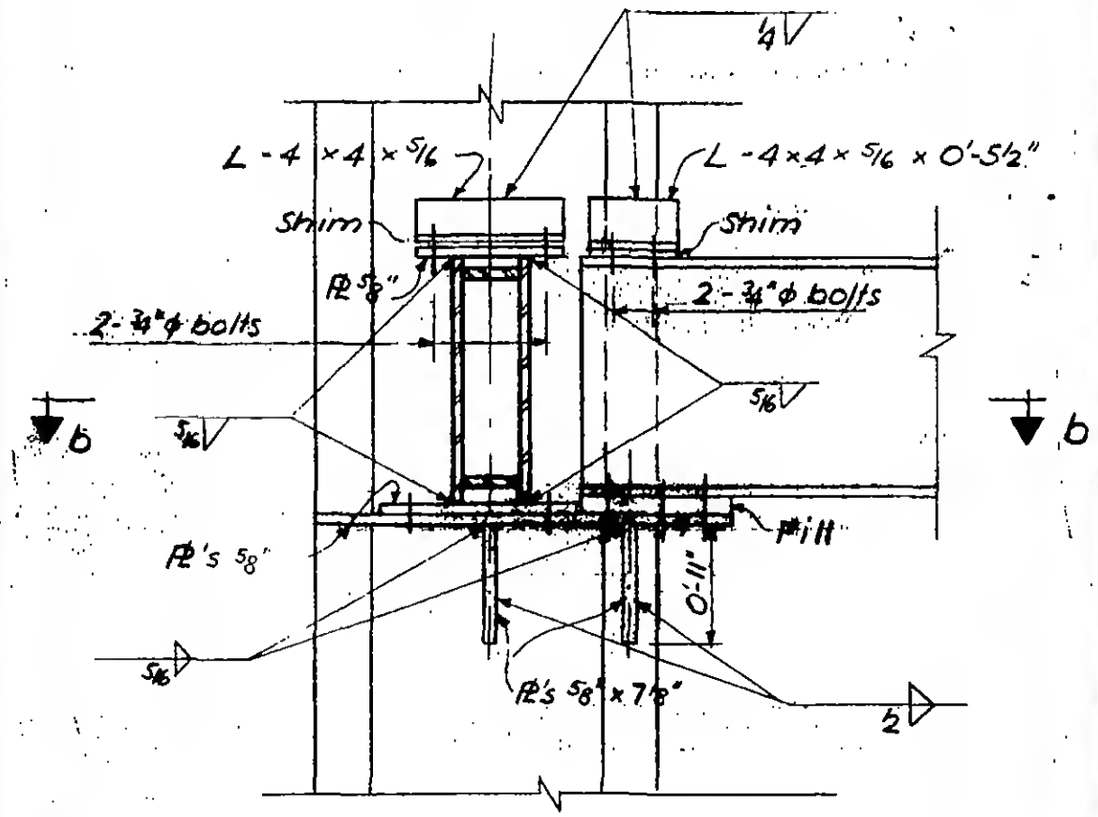

Section a-a

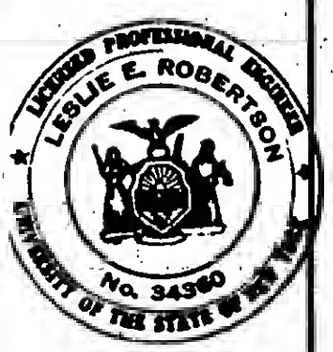

6-ABI-70

SKILLING - HELLE - CHRISTIANSEN - ROBERTSON Structural & Civil Engineers

PROJECT THE WORLD TRADE CENTER | TITLE CONNECTION DETAIL 265 C | DATE 2-9-68

REVISIONS

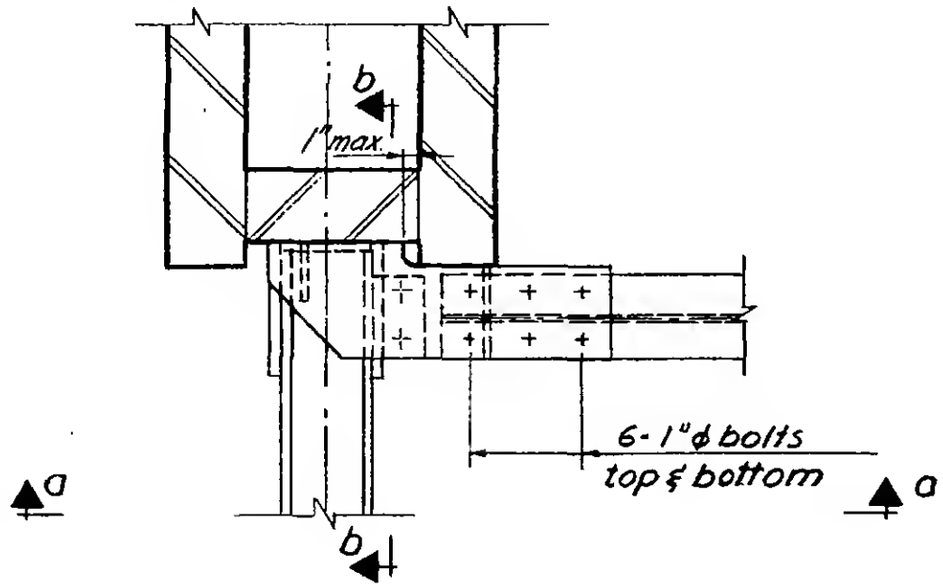

Plan

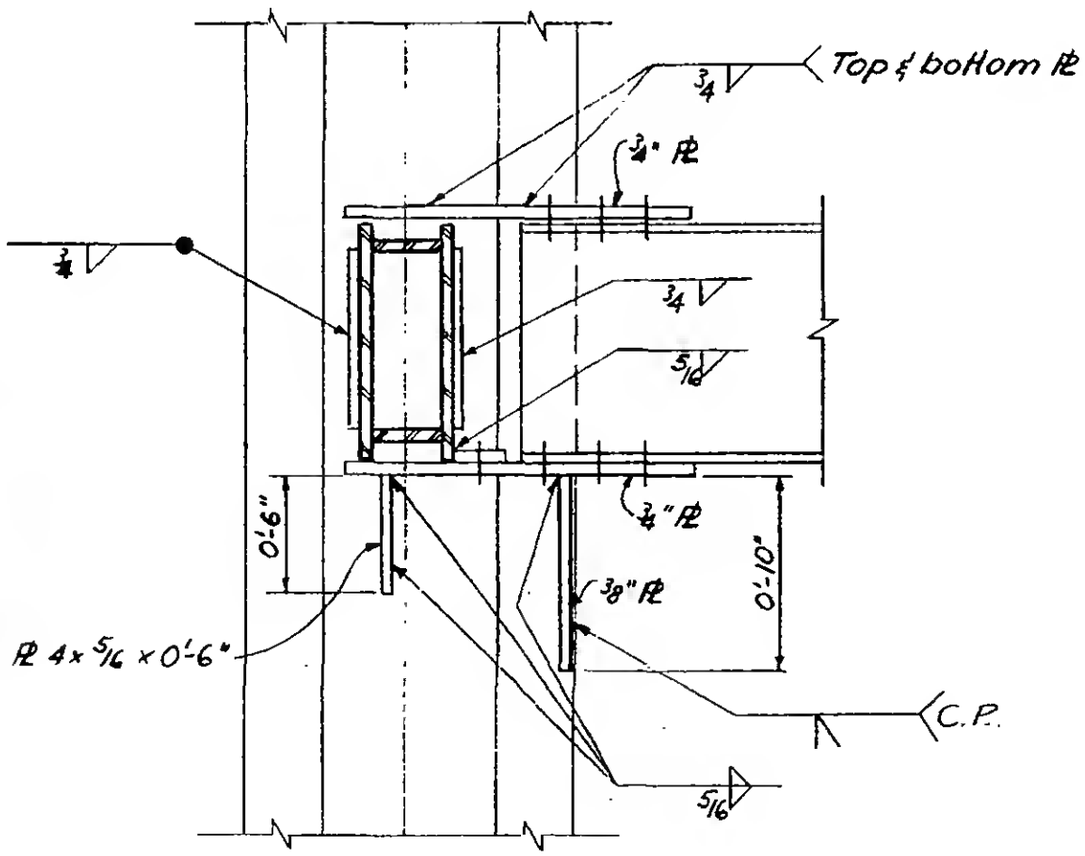

Section a-a

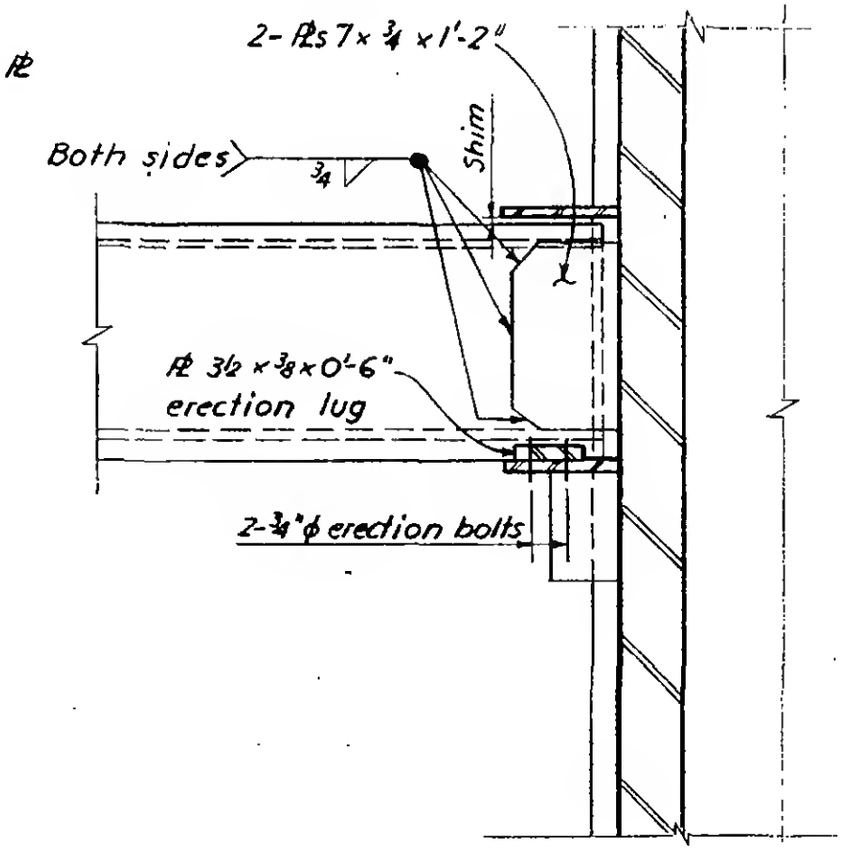

Section b-b

6-AB1-70.1

LICENSED PROFESSIONAL ENGINEER
LESLIE E. ROBERTSON
No. 34360
UNIVERSITY OF THE STATE OF NEW YORK

SKILLING - HELLE - CHRISTIANSEN - ROBERTSON Structural & Civil Engineers

PROJECT THE WORLD TRADE CENTER | TITLE CONNECTION DETAIL 265 D | DATE 1-24-68

REVISIONS

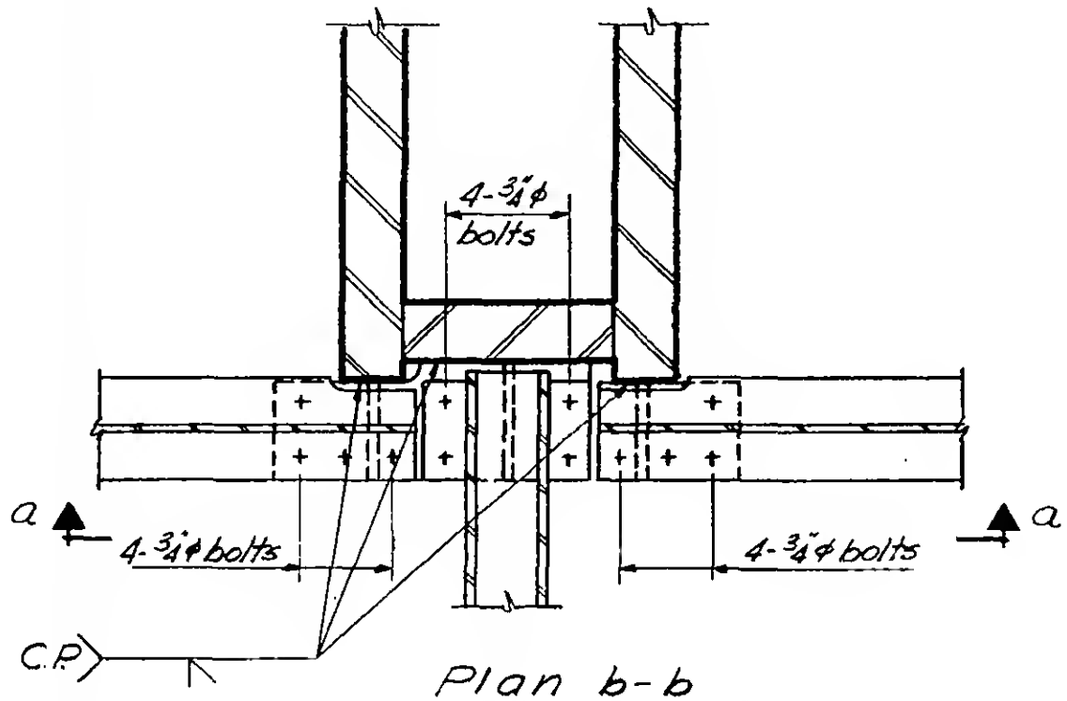

Plan b-b

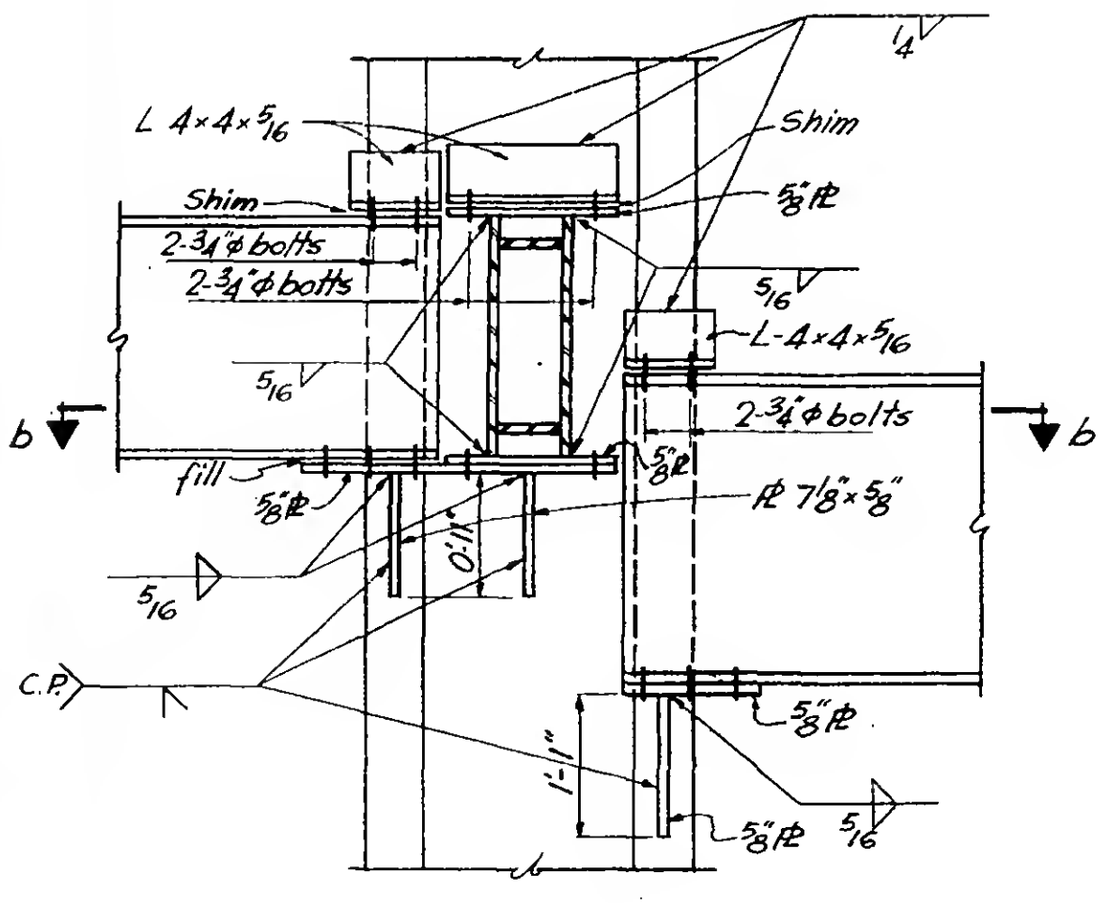

Section a-a

6-AB1-70.2

LICENSED PROFESSIONAL ENGINEER
LESLIE E. ROBERTSON
No. 94360
UNIVERSITY OF THE STATE OF NEW YORK

WORTHINGTON, SKILLING, HELLE & JACKSON — Civil & Structural Engineers

PROJECT: THE WORLD TRADE CENTER | TITLE: CONNECTION DETAIL 266 A, B | DATE: 6-30-67

REVISIONS

10-5-67

11-27-68

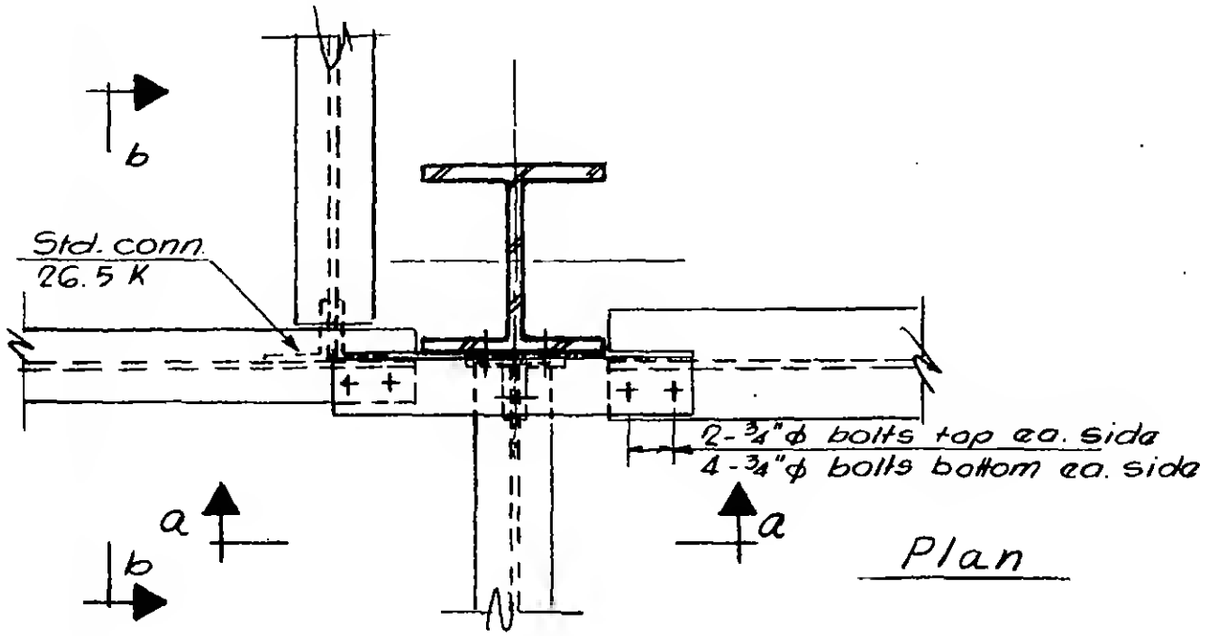

Plan

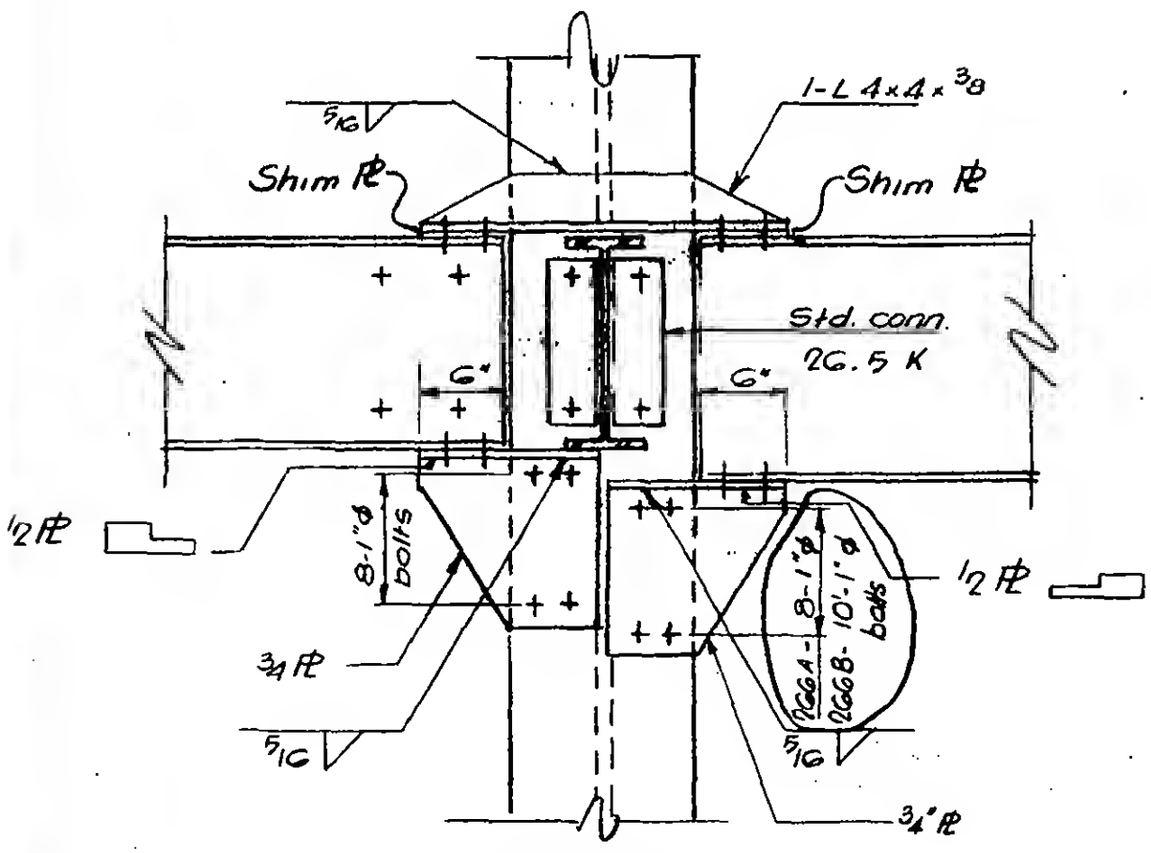

SECTION a-a

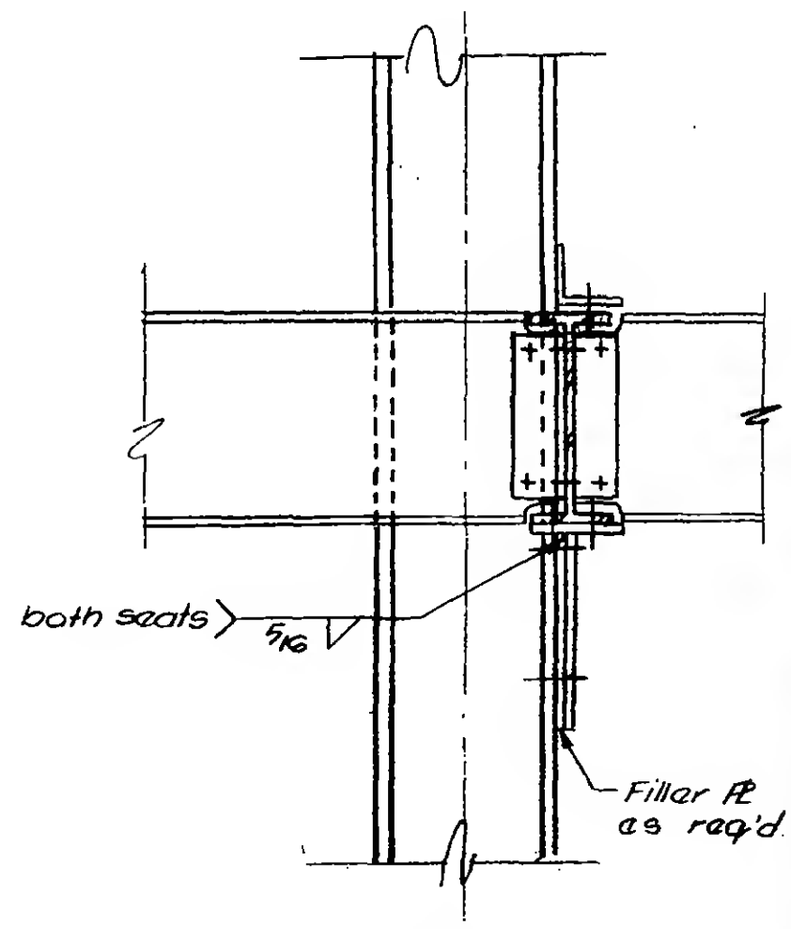

SECTION b-b

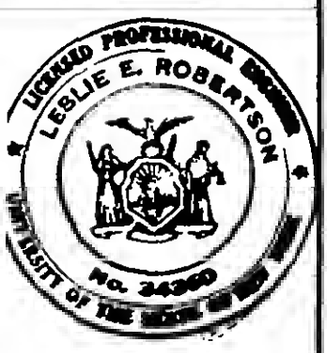

G-AB1-71

SKILLING - HELLE - CHRISTIANSEN - ROBERTSON — Structural & Civil Engineers

PROJECT: THE WORLD TRADE CENTER | TITLE: CONNECTION DETAIL 267A,B | DATE: 6-5-67

REVISIONS
9-15-67
11-10-67

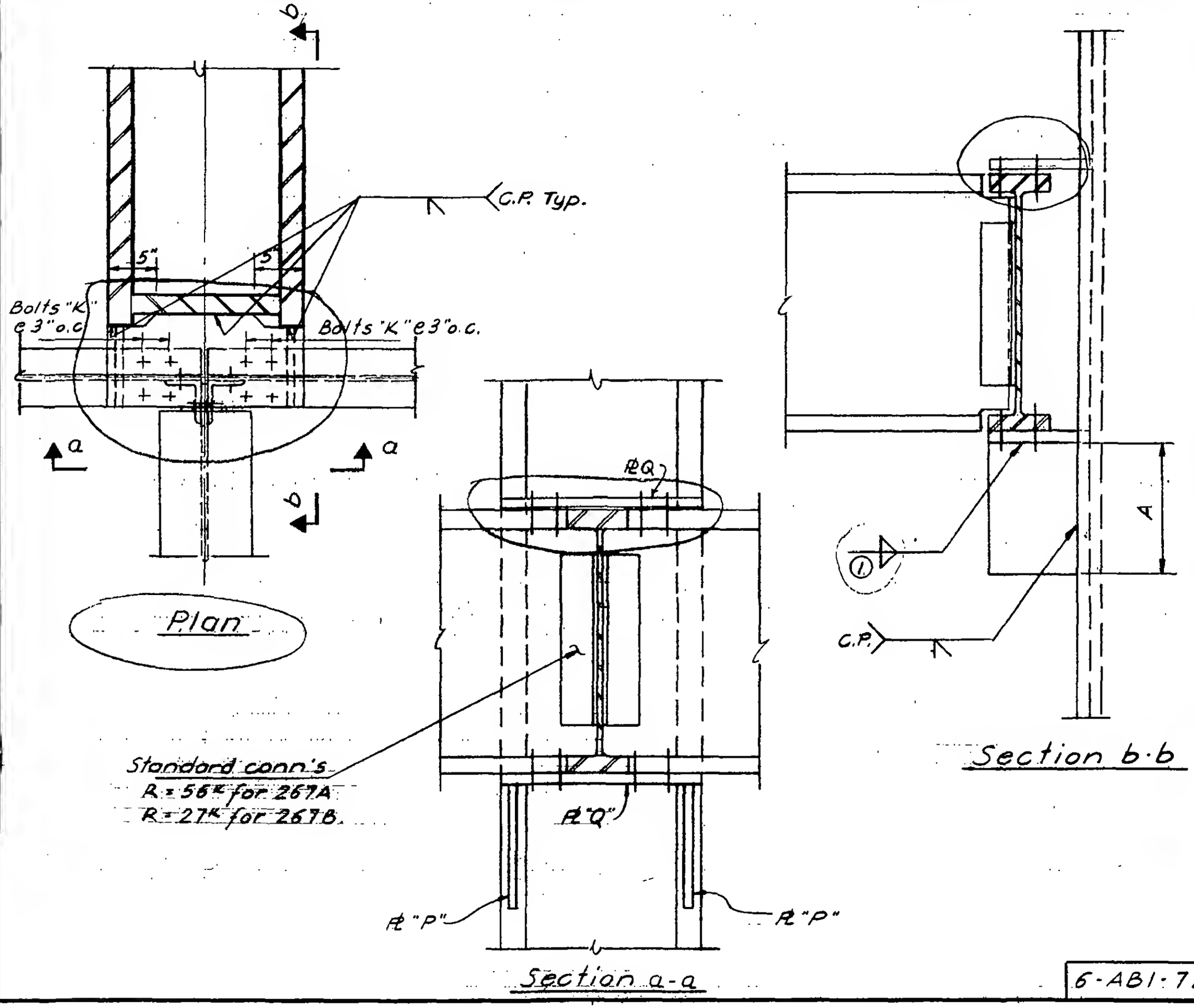

6-AB1-72

SKILLING - HELLE - CHRISTIANSEN - ROBERTSON Structural & Civil Engineers

PROJECT: THE WORLD TRADE CENTER

TITLE: SCHEDULE FOR DETAIL 267A & B

DATE: 9-15-67

REVISIONS

11-10-67

	267A	267B				
PLATES:						
PL P	3/4	5/8				
PL Q	3/4	5/8				
DIMENSIONS:						
"A"	1'-3"	0'-10"				
BOLTS:						
"K"	4-3/4"Φ	4-3/4"Φ				
WELDS:						
1	5/16	5/16"				

G-AB1-72.1

WORTHINGTON, SKILLING, HELLE & JACKSON — Civil & Structural Engineers

PROJECT: THE WORLD TRADE CENTER | TITLE: CONNECTION DETAIL 268A | DATE: 7/14/67

REVISIONS
8-5-67
11-16-67

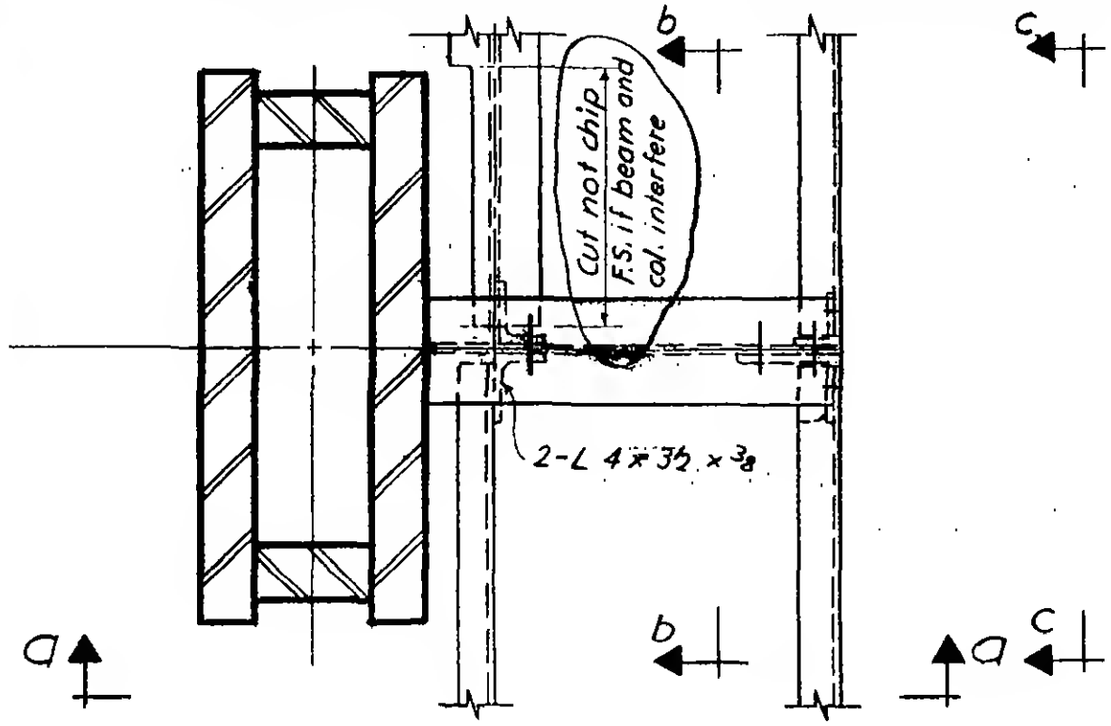

Plan

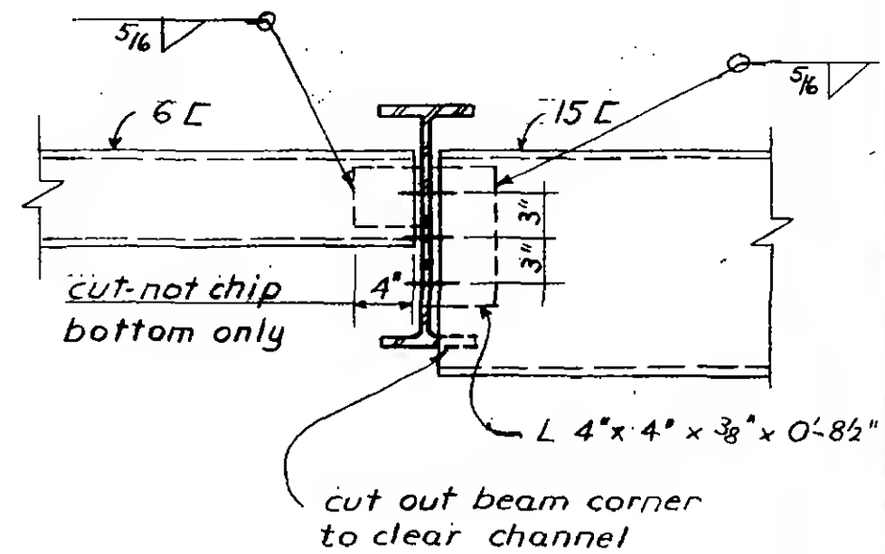

Section c-c

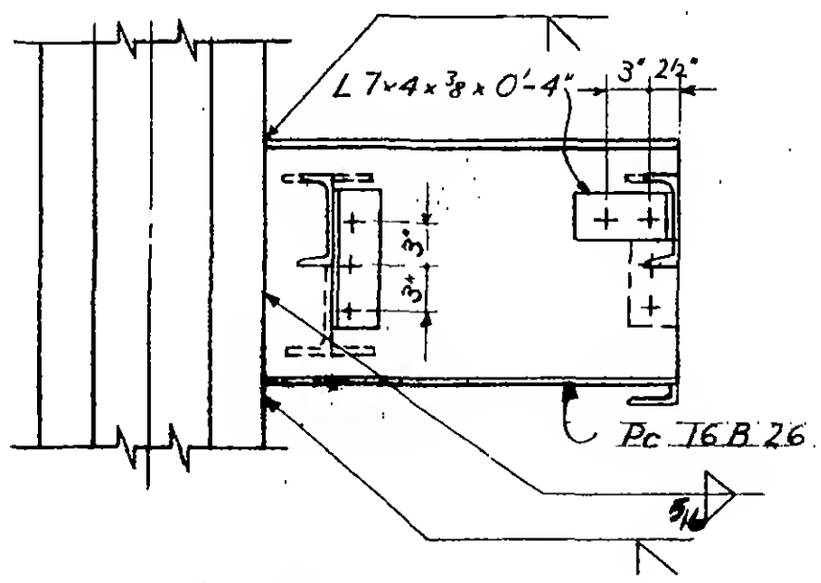

Section a-a

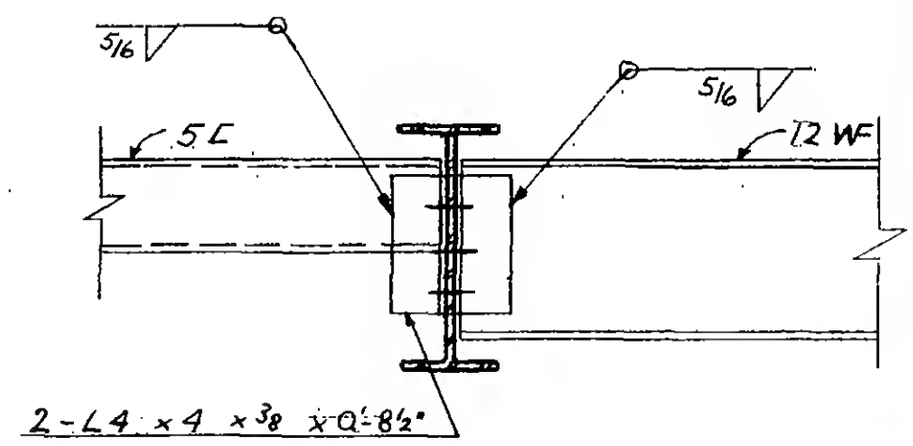

Section b-b

All bolts ¾" ϕ

LICENSED PROFESSIONAL ENGINEER
LESLIE E. ROBERTSON
No. 34360
UNIVERSITY OF THE STATE OF NEW YORK

6-AB1-73

WORTHINGTON, SKILLING, HELLE & JACKSON — Civil & Structural Engineers

PROJECT: THE WORLD TRADE CENTER | TITLE: CONNECTION DETAIL 269 | DATE: 7/20/67

REVISIONS

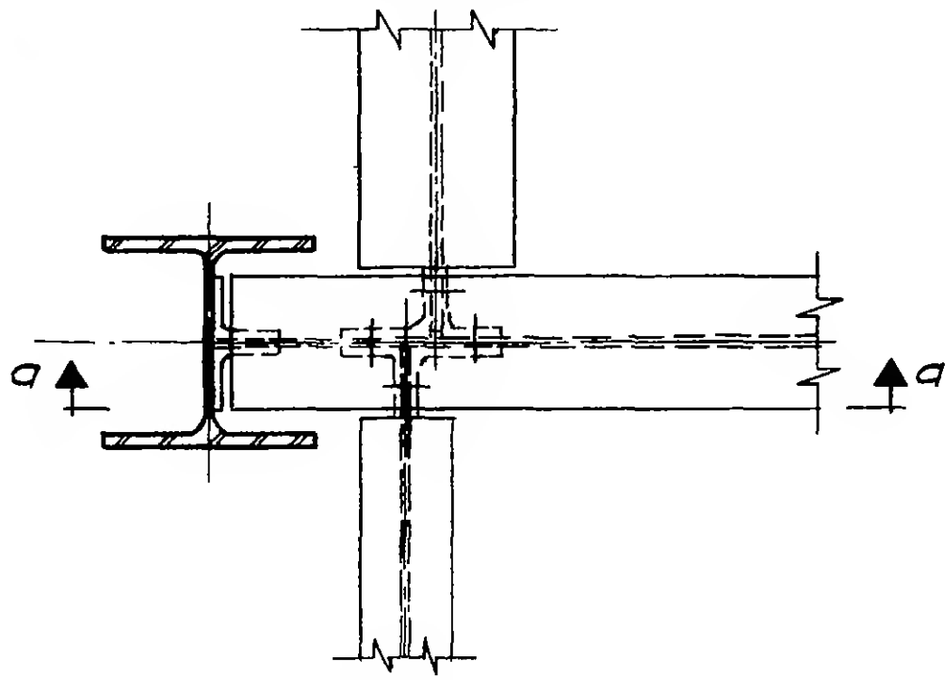

PLAN

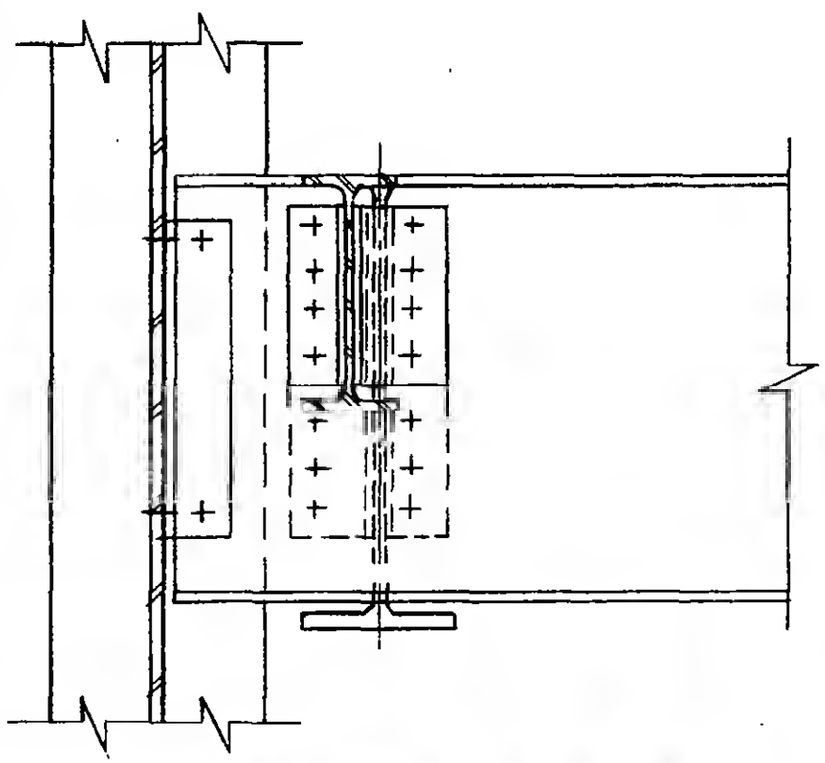

Section a-a

6-AB1-74

WORTHINGTON, SKILLING, HELLE & JACKSON — Civil & Structural Engineers

PROJECT	TITLE	DATE
THE WORLD TRADE CENTER	CONNECTION DETAIL 270 A	6-5-67

REVISIONS

9-15-67
11-10-67

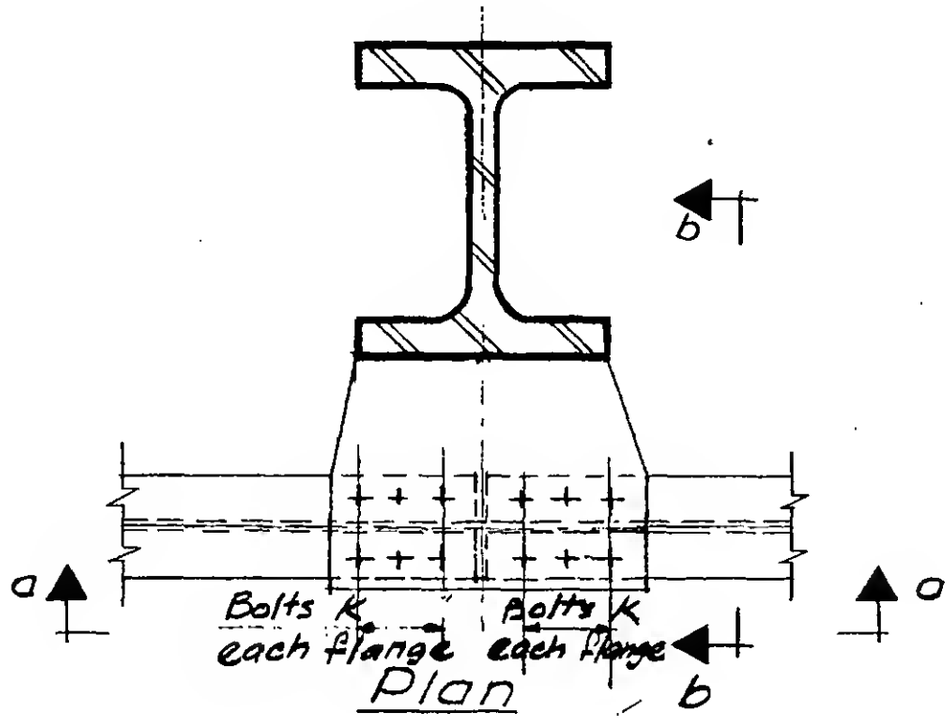

Plan

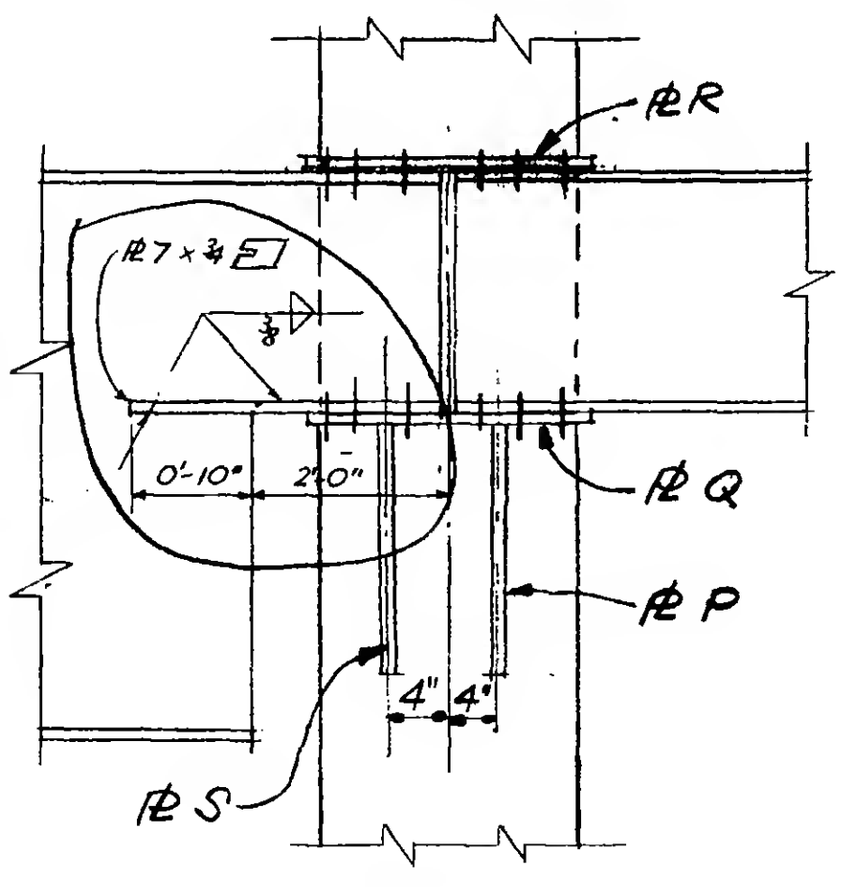

Section a-a

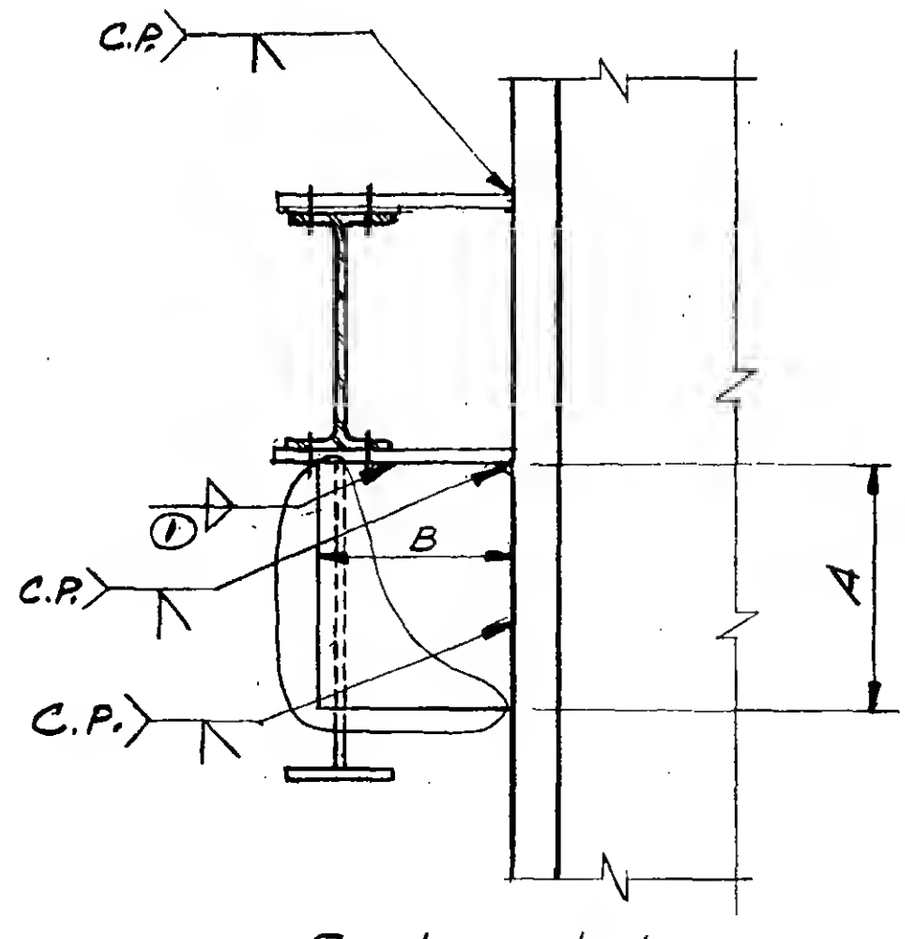

Section b-b

6-AB1-75

SKILLING - HELLE - CHRISTIANSEN - ROBERTSON Structural & Civil Engineers

PROJECT THE WORLD TRADE CENTER | TITLE SCHEDULE FOR DETAIL 270 A | DATE 9-15-67

REVISIONS

	270A
PLATE	
P	7/8"
Q	3/4"
R	5/8"
S	3/4"
DIM.	
A	1'-6"
B	1'-3"
BOLT	
K	6-7/8"φ
WELD	
1	3/8

LICENSED PROFESSIONAL ENGINEER
LESLIE E. ROBERTSON
No. 34360
STATE OF NEW YORK

6-AB1-75.1

SKILLING - HELLE - CHRISTIANSEN - ROBERTSON Structural & Civil Engineers

PROJECT: THE WORLD TRADE CENTER | TITLE: CONNECTION DETAIL 271 A | DATE: 6-19-67

REVISIONS

8-5-67

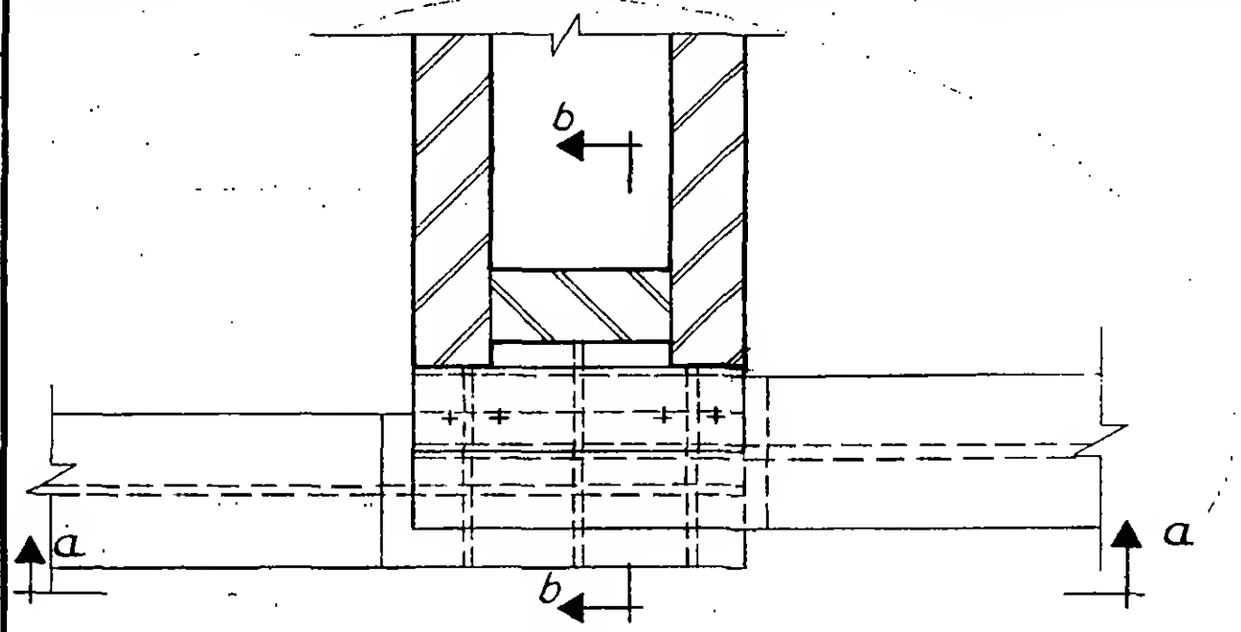

Plan

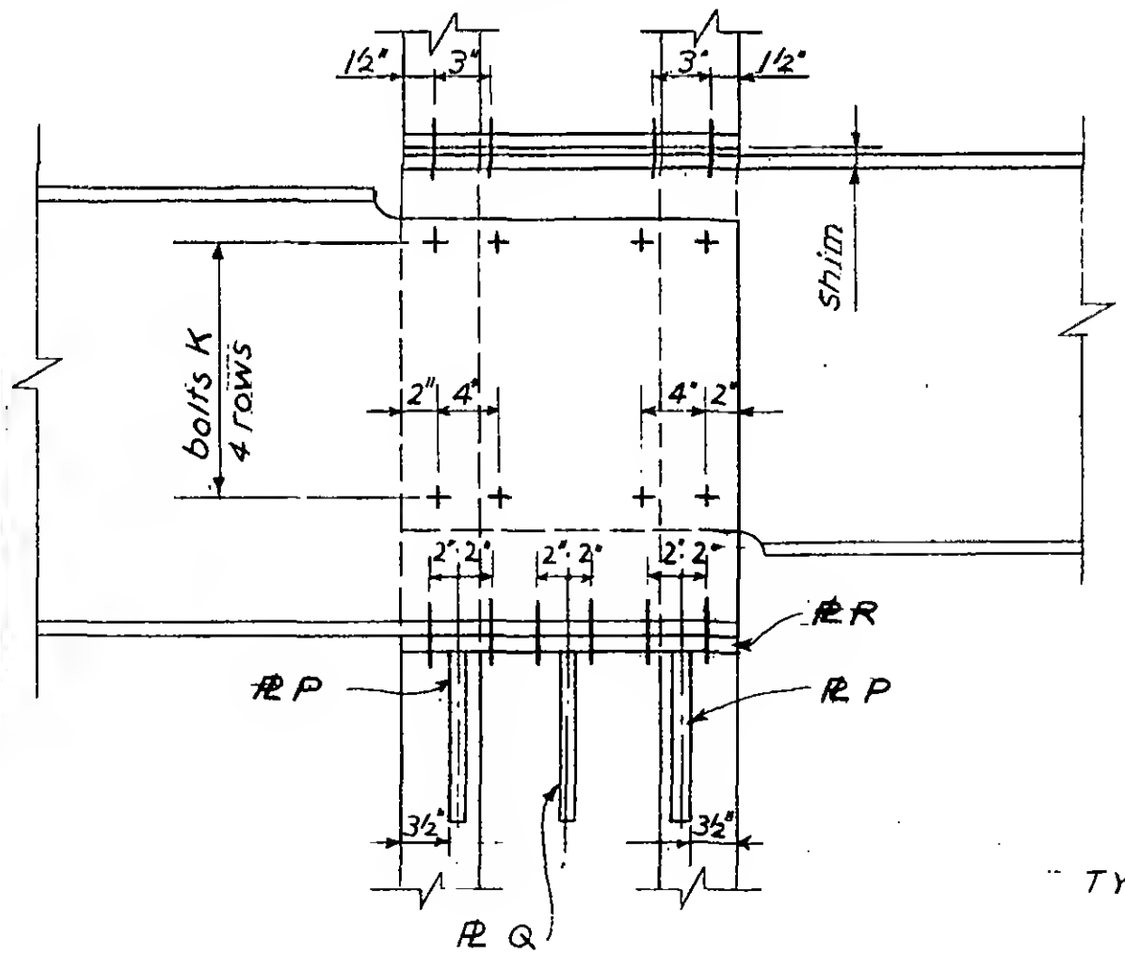

Section a-a

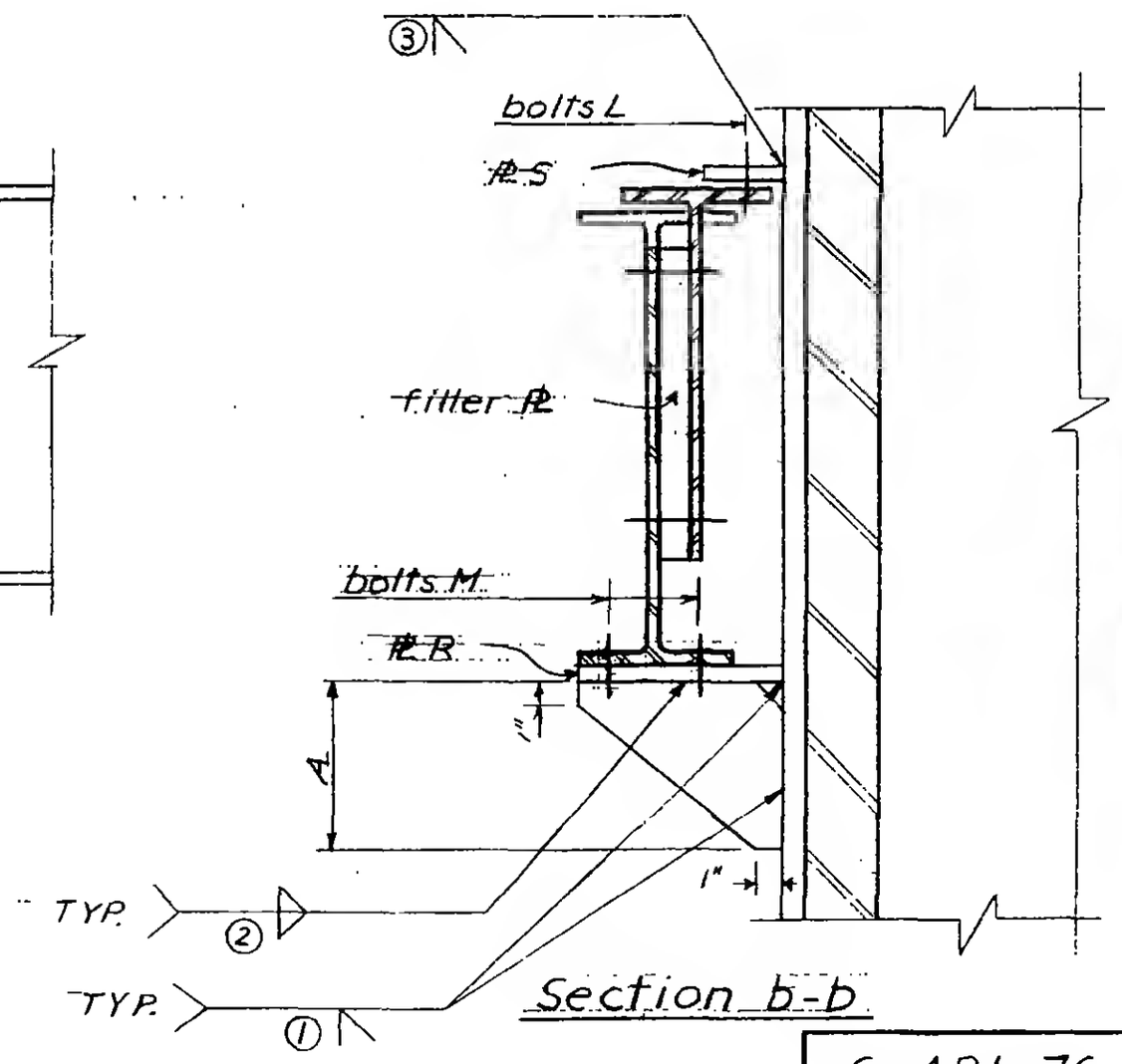

Section b-b

6-AB1-76

LICENSED PROFESSIONAL ENGINEER
LESLIE E. ROBERTSON
No. 34360
UNIVERSITY OF THE STATE OF NEW YORK

WORTHINGTON, SKILLING, HELLE & JACKSON — Civil & Structural Engineers

PROJECT: THE WORLD TRADE CENTER | TITLE: SCHEDULE FOR DETAIL 271 | DATE: 8-5-67

REVISIONS

	A
PLATES	
P	1½"
Q	1"
R	1"
S	½"
DIMENSIONS	
A	1'-2"
BOLTS	
K	7 - ¾" ϕ
L	4 - ¾" ϕ
M	12 - ¾" ϕ
WELDS	
①	C.P.
②	½
③	C.P.

LICENSED PROFESSIONAL ENGINEER
LESLIE E. ROBERTSON
No. 34360
UNIVERSITY OF THE STATE OF NEW YORK

6-AB1-76.1

WORTHINGTON, SKILLING, HELLE & JACKSON — Civil & Structural Engineers

PROJECT: THE WORLD TRADE CENTER | TITLE: CONNECTION DETAIL 272A | DATE: 6-19-67

REVISIONS: 8-5-67

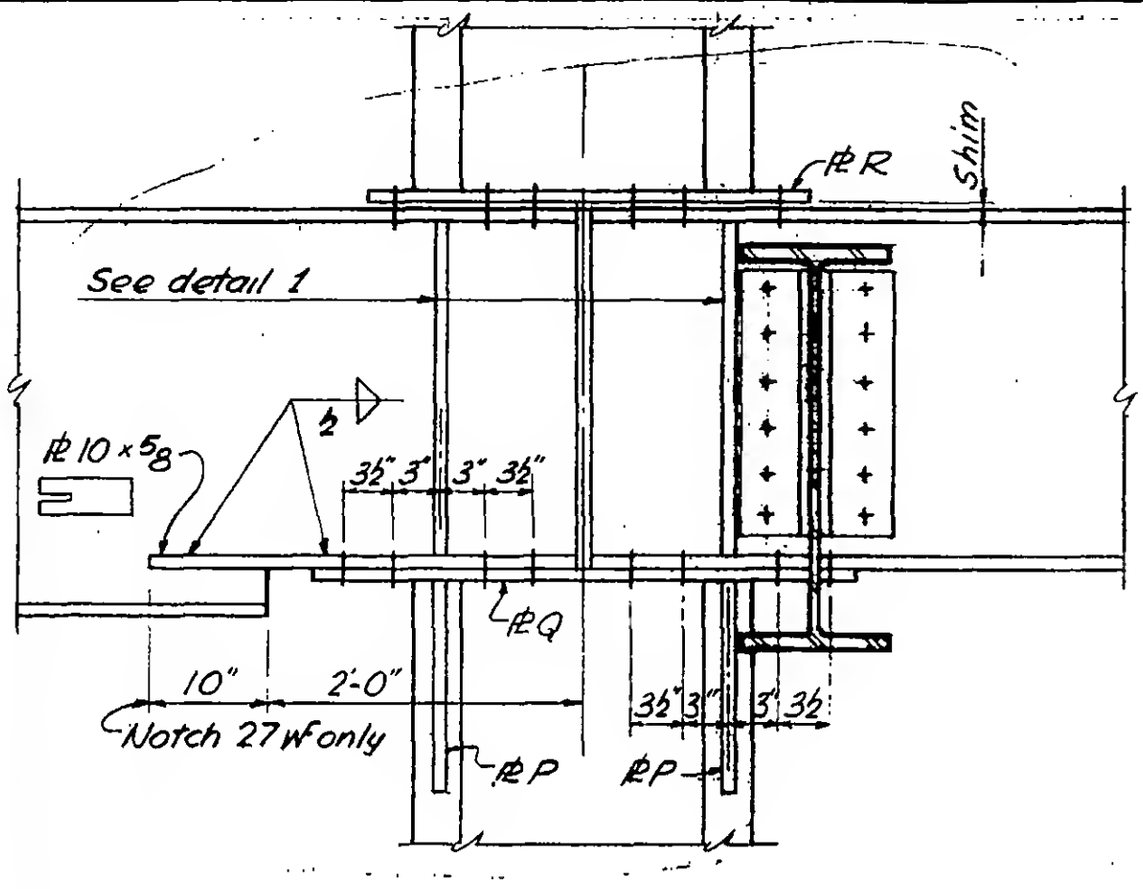

SECTION a-a

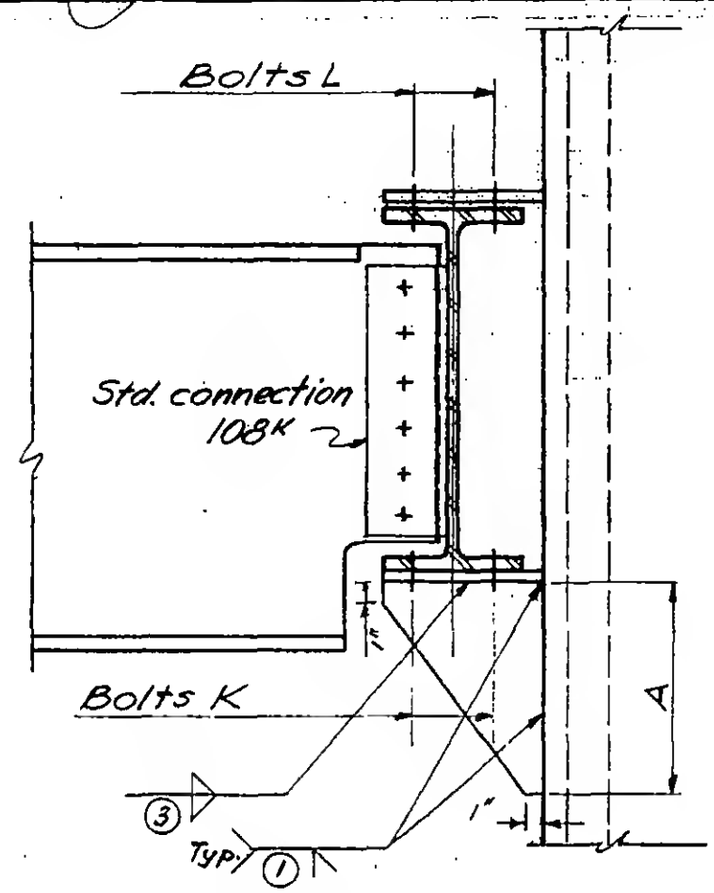

SECTION b-b

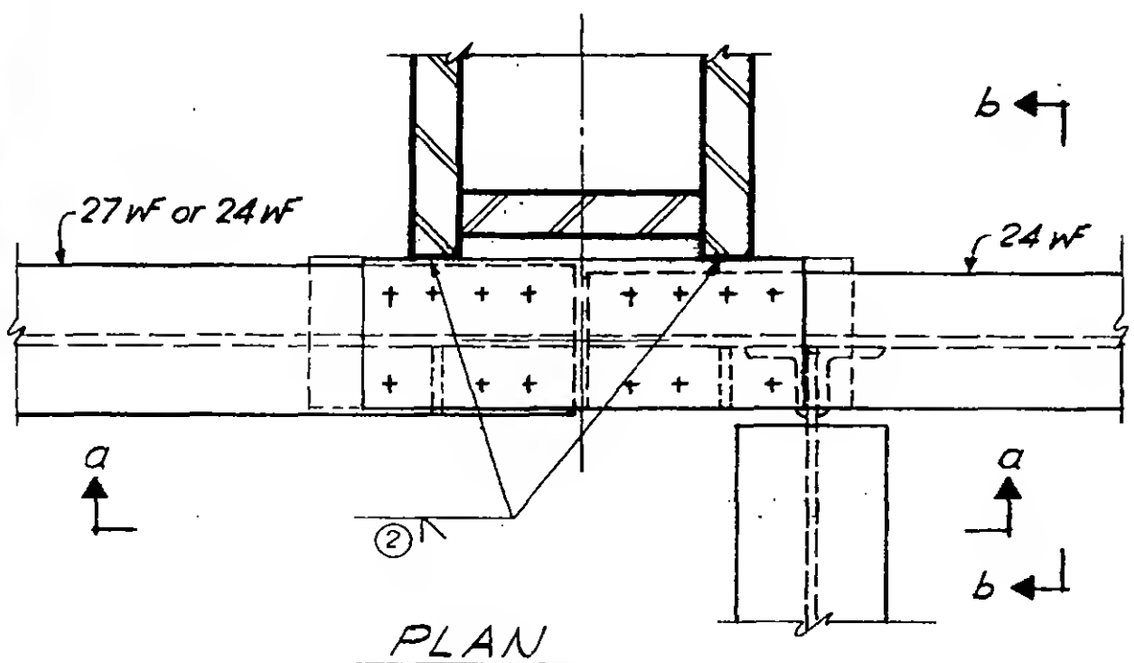

PLAN

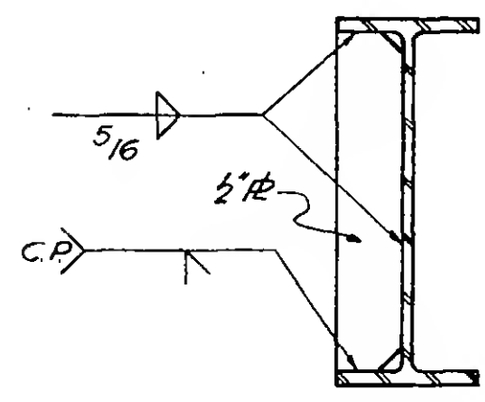

Detail 1

LICENSED PROFESSIONAL ENGINEER — LESLIE E. ROBERTSON — No. 34360 — UNIVERSITY OF THE STATE OF NEW YORK

G-AB1-77

WORTHINGTON, SKILLING, HELLE & JACKSON — Civil & Structural Engineers

PROJECT: THE WORLD TRADE CENTER | TITLE: SCHEDULE FOR DETAIL 272 A, C, D, G | DATE: [illegible]

REVISIONS

9-18-68

	272 A	272 C,D,G
PLATES		
P	1"	3/4"
Q	1"	1"
R	1"	1"
DIMENSION		
A	1'-4"	—
BOLTS		
K	16-1"ϕ	—
L	14-1"ϕ	—
WELDS		
1	C.P.	—
2	C.P.	—
3	½	—

LICENSED PROFESSIONAL ENGINEER
LESLIE E. ROBERTSON
No. 34360
CITY OF THE STATE OF NEW YORK

6-AB1-77.1

SKILLING - HELLE - CHRISTIANSEN - ROBERTSON Structural & Civil Engineers

PROJECT THE WORLD TRADE CENTER | TITLE CONNECTION DETAIL 272B | DATE 2-9-68

REVISIONS

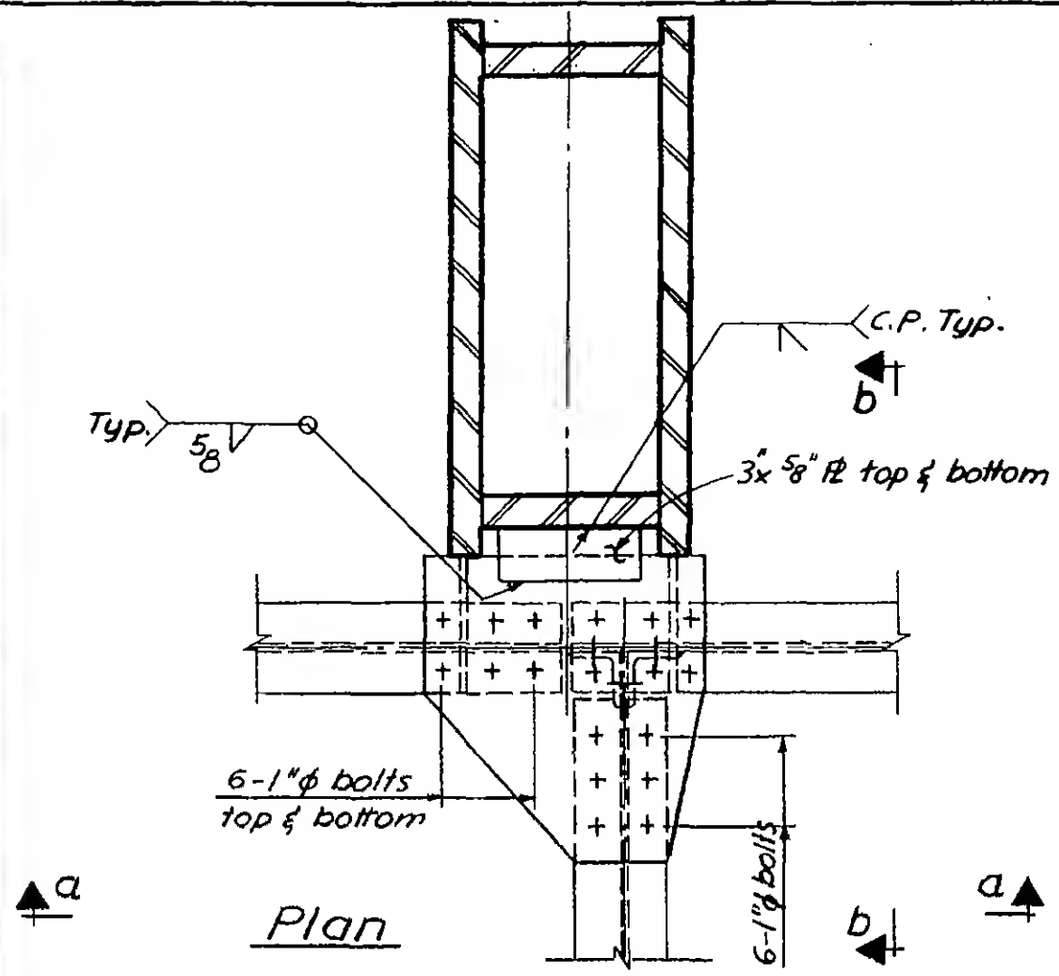

Plan

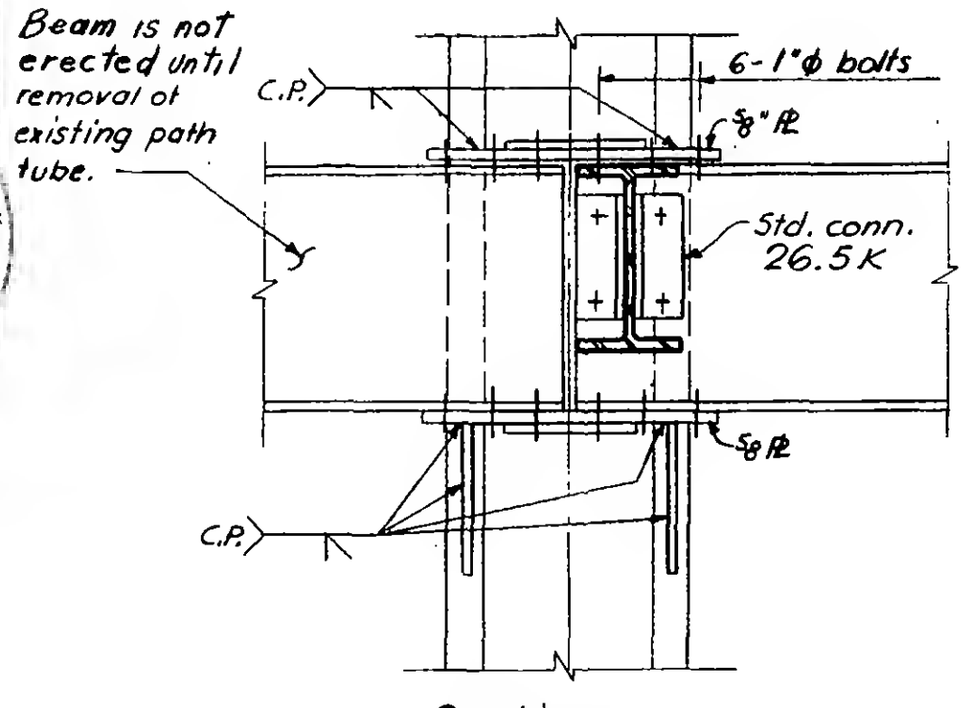

Section a-a

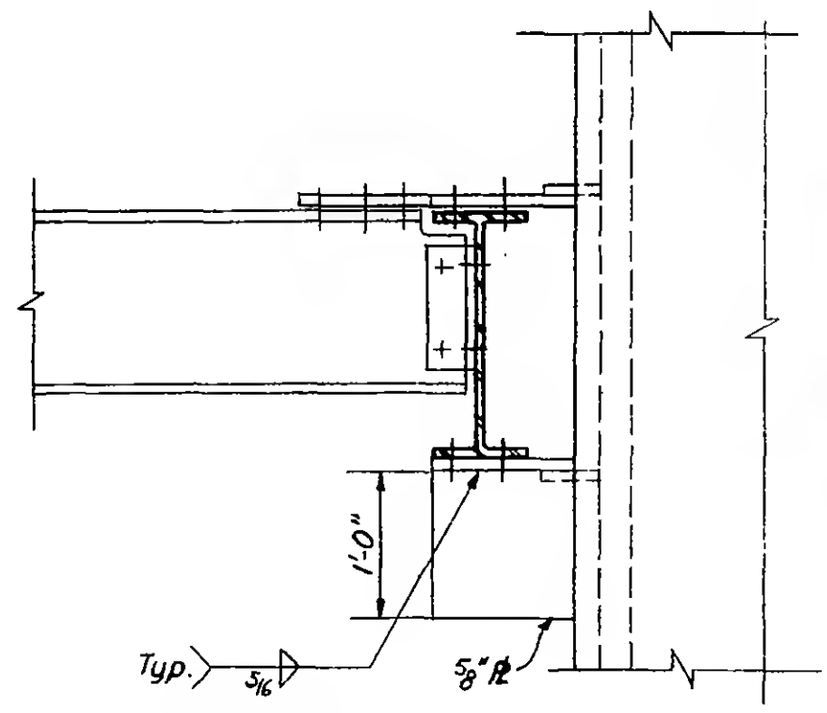

Section b-b

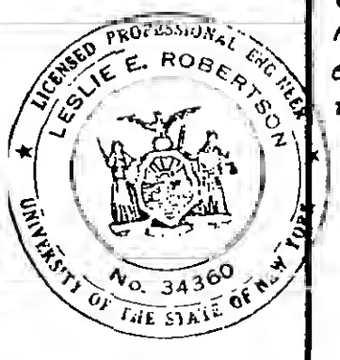

6-ABI-77.2

SKILLING, HELLE, CHRISTIANSEN, ROBERTSON — Structural & Civil Engineers

PROJECT: THE WORLD TRADE CENTER | TITLE: CONNECTION DETAIL 272 C, D, G | DATE: 9-18-68

REVISIONS

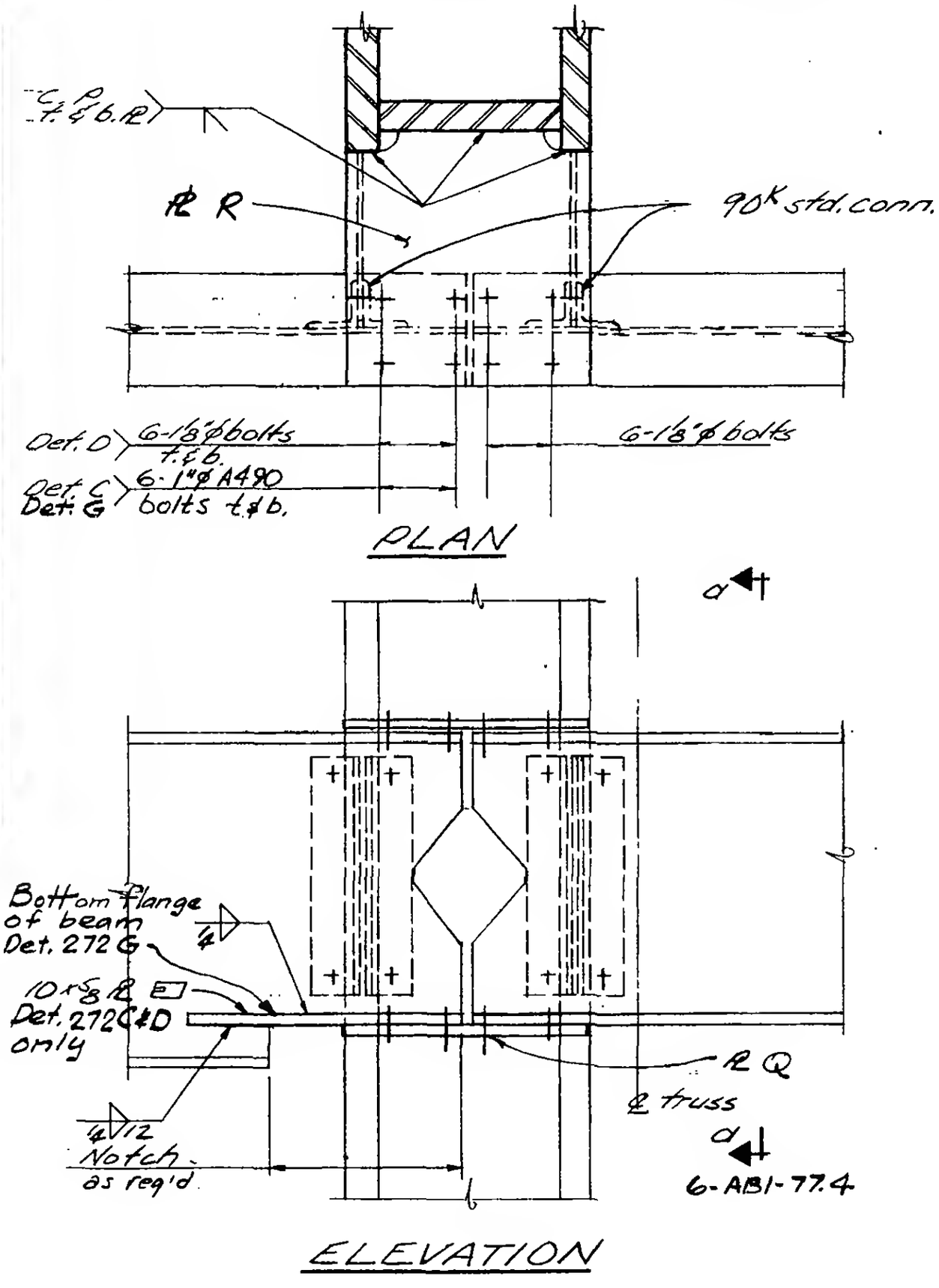

DESIGNED

DRAWN

REVIEWED

6-AB1-77.3

SKILLING, HELLE, CHRISTIANSEN, ROBERTSON — Structural & Civil Engineers

PROJECT: THE WORLD TRADE CENTER | TITLE: CONNECTION DETAIL 272 C, D, G | DATE: 9-18-68

REVISIONS

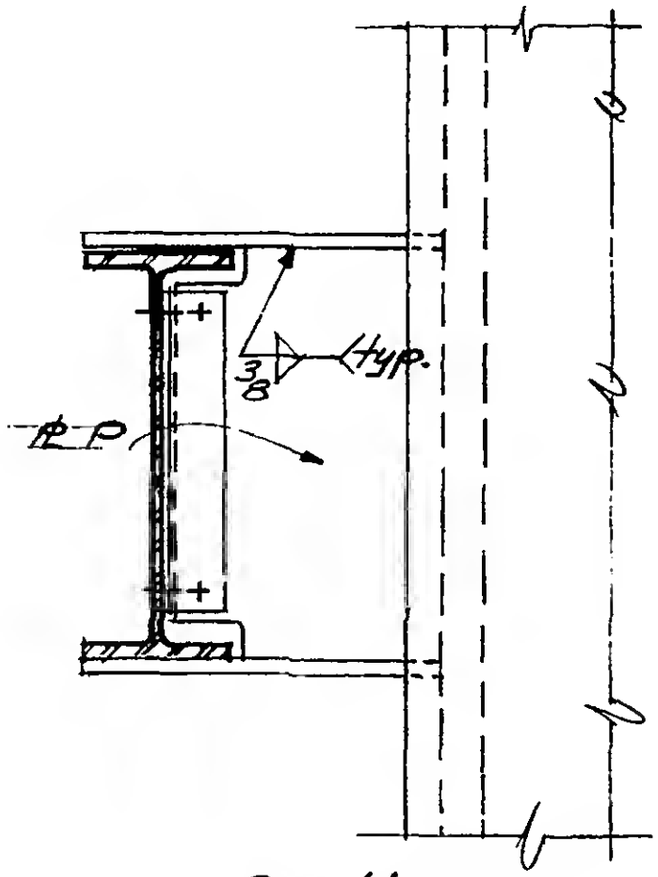

Section a-a

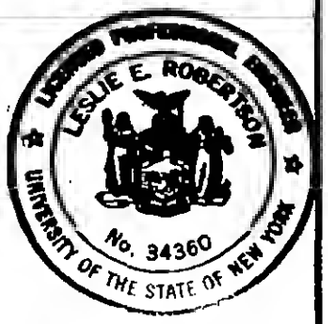

DESIGNED

DRAWN

REVIEWED

6-AB1-77.4

WORTHINGTON, SKILLING, HELLE & JACKSON — Civil & Structural Engineers

PROJECT	TITLE	DATE
THE WORLD TRADE CENTER	CONNECTION DETAIL 273 A & B	6-5-67

REVISIONS

10-2-67

2-21-68

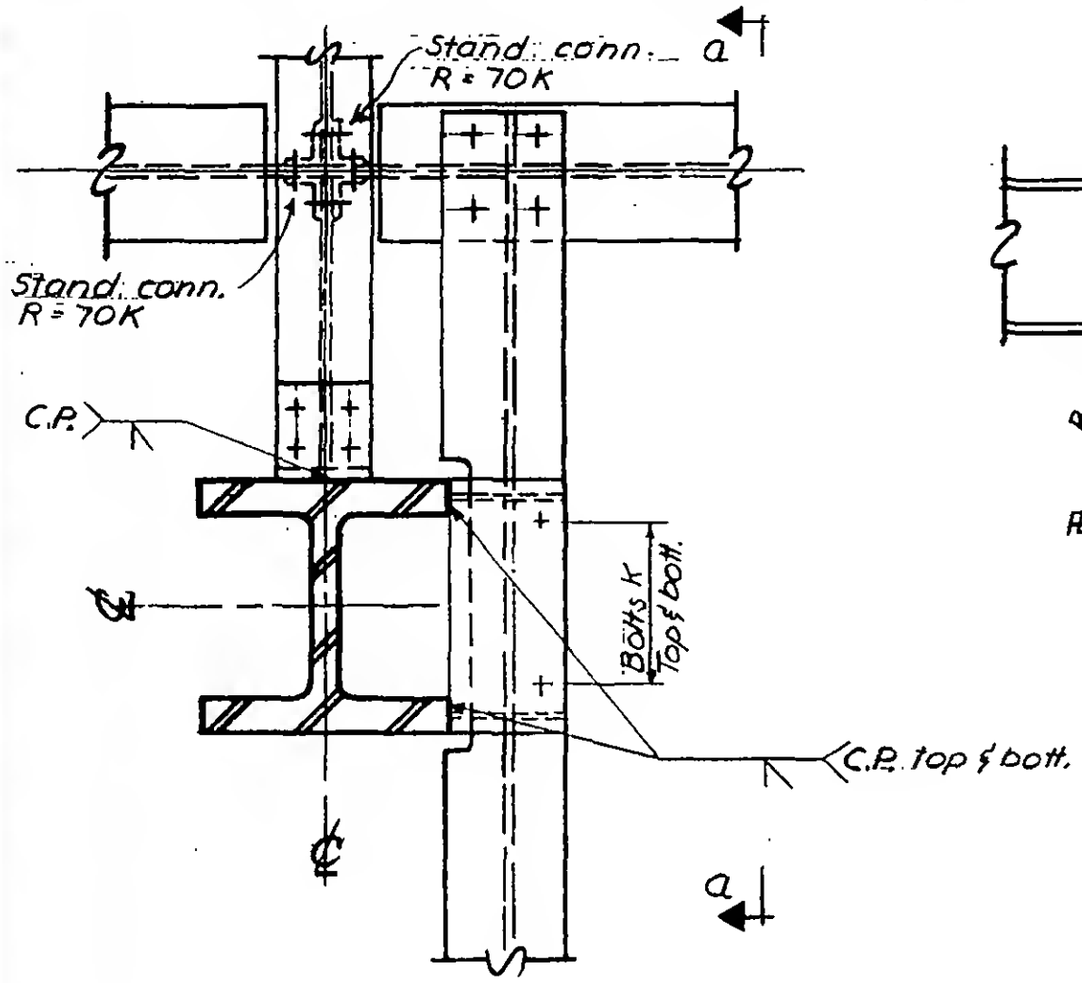

Plan

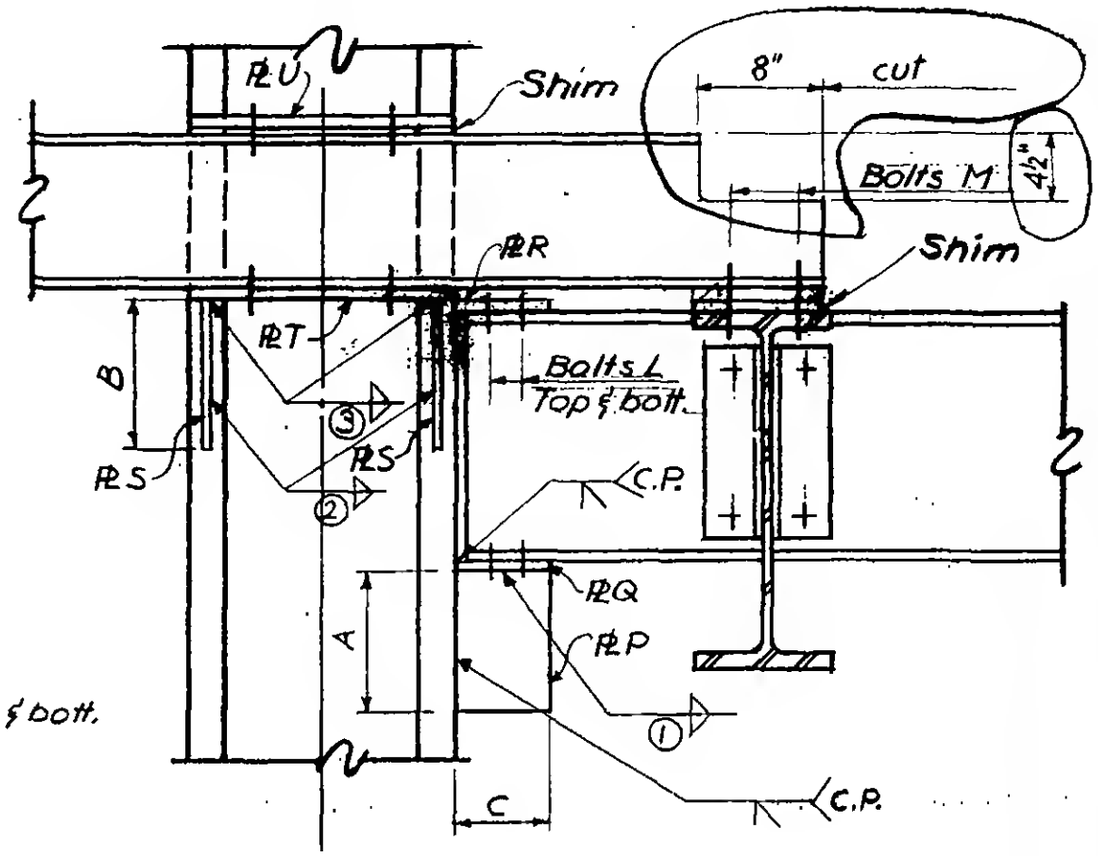

Section a-a

6-AB1-78

SKILLING - HELLE - CHRISTIANSEN - ROBERTSON Structural & Civil Engineers

PROJECT: THE WORLD TRADE CENTER | TITLE: SCHEDULE FOR DETAIL 273 A,B | DATE: 10-2-67

REVISIONS

	273 A	273 B				
PLATES						
P	10" x 1"	10" x 1"				
Q	1"	1"				
R	3/8"	3/8"				
S	3/8"	3/8"				
T	3/8"	3/8"				
U	3/8"	3/8"				
BOLTS						
K	4 - 3/4" φ	4 - 3/4" φ				
L	4 - 3/4" φ	4 - 3/4" φ				
M	4 - 3/4" φ	4 - 7/8" φ				
DIMENSIONS						
A	1'-7"	1'-7"				
B	0'-8"	0'-8"				
WELDS						
①	5/16	5/16				
②	5/16	5/16				
③	5/16	5/16				

LICENSED PROFESSIONAL ENGINEER LESLIE E. ROBERTSON No. 34360 UNIVERSITY OF THE STATE OF NEW YORK

6-AB1-78.1

WORTHINGTON, SKILLING, HELLE & JACKSON — CIVIL ENGINEERS

PROJECT: THE WORLD TRADE CENTER | TITLE: CONNECTION DETAIL [illegible] | DATE: [illegible]-67

REVISIONS
7-28-67
9-15-67
11-14-67

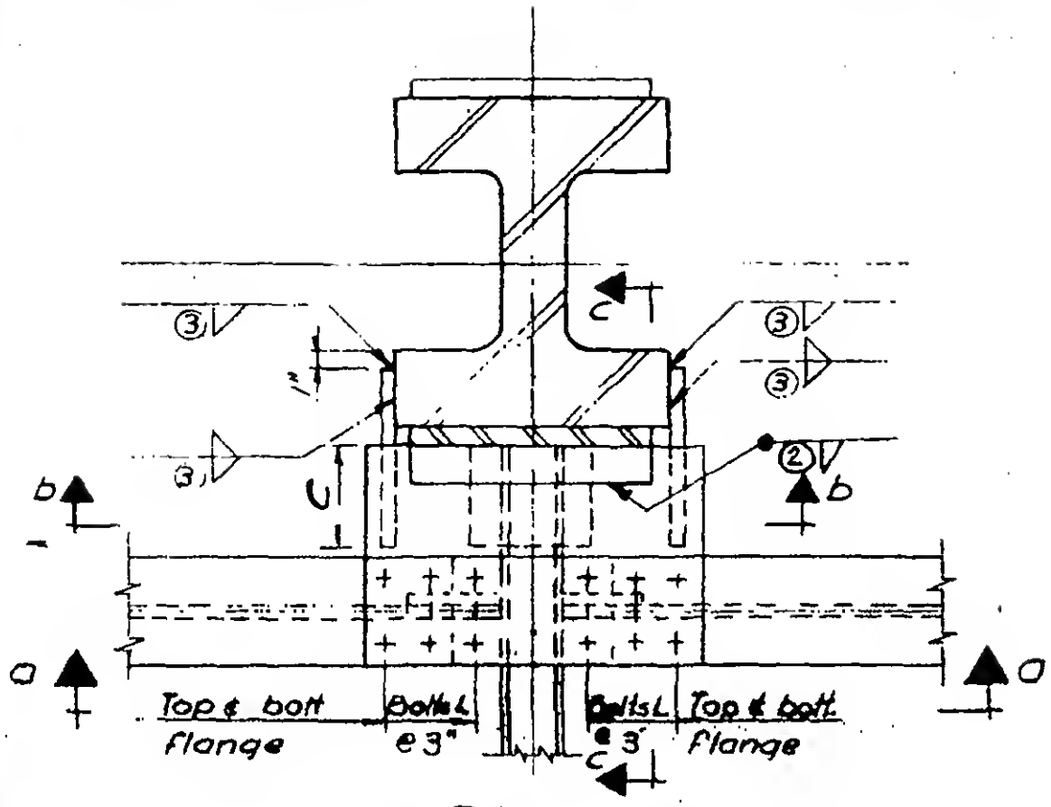

Plan

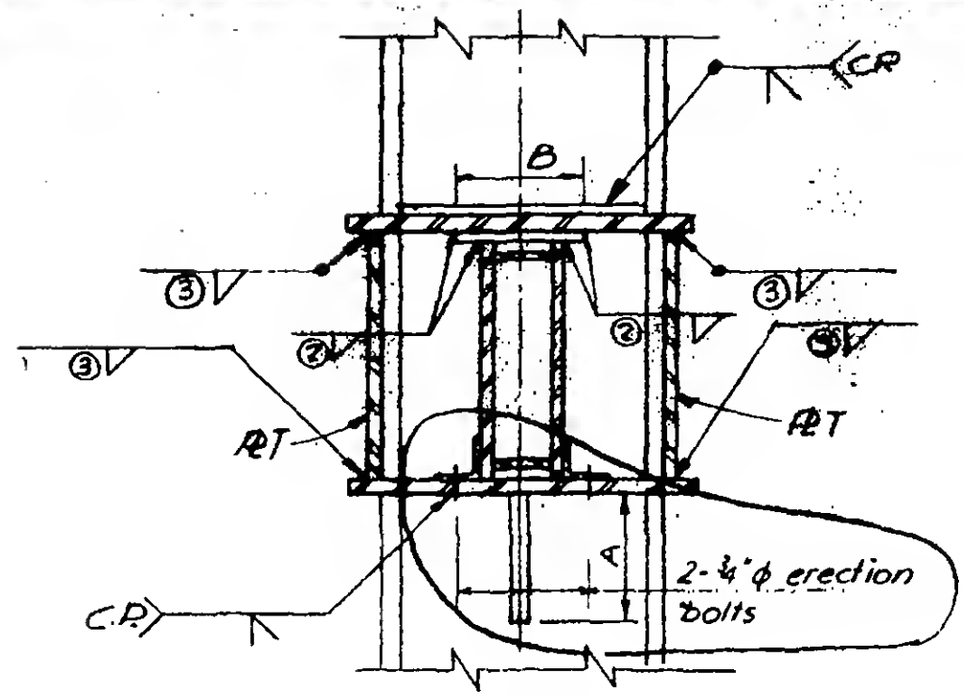

Section b-b

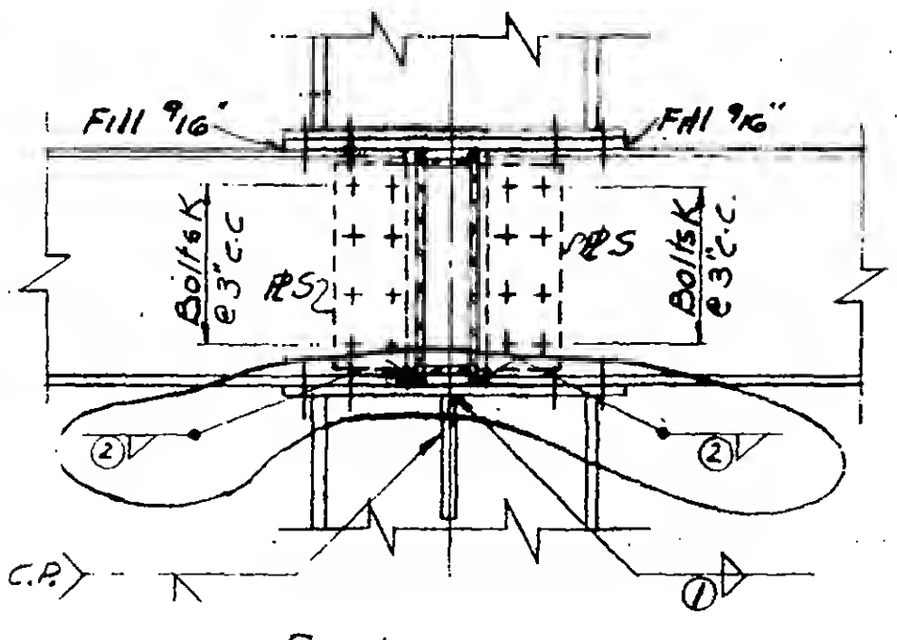

Section a-a

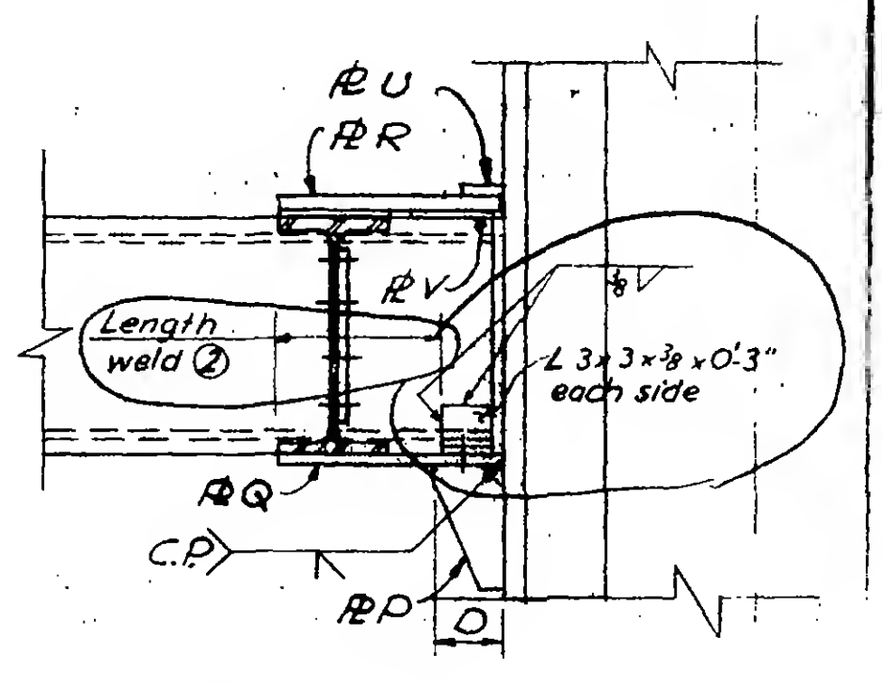

Section c-c

G-AB1-81

PROJECT	TITLE	DATE
THE WORLD TRADE CENTER	CONNECTION DETAIL 274A (ALT.)	5-9-67

REVISIONS

7-28-67
9-15-67
10-11-67

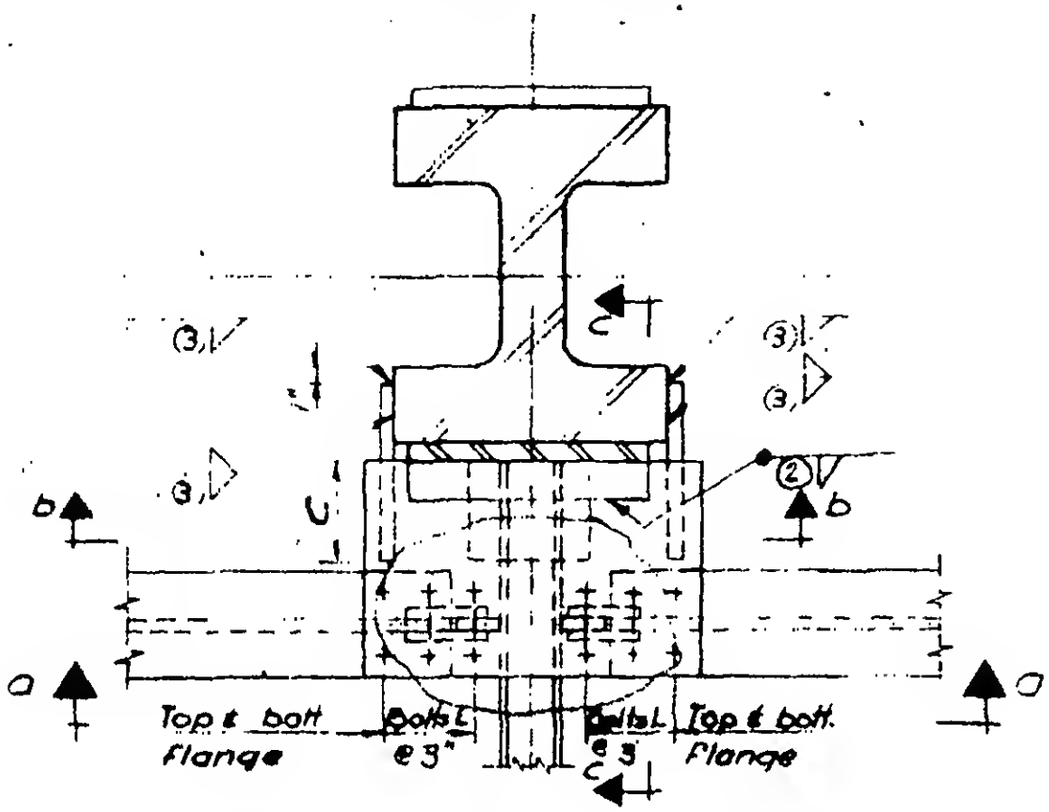

Plan

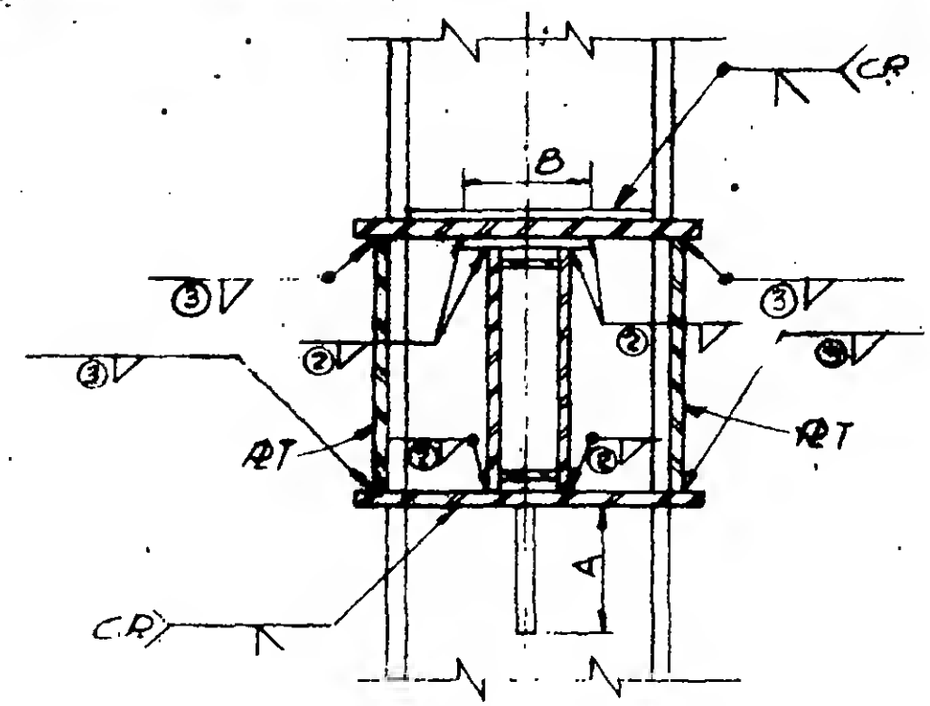

Section b-b

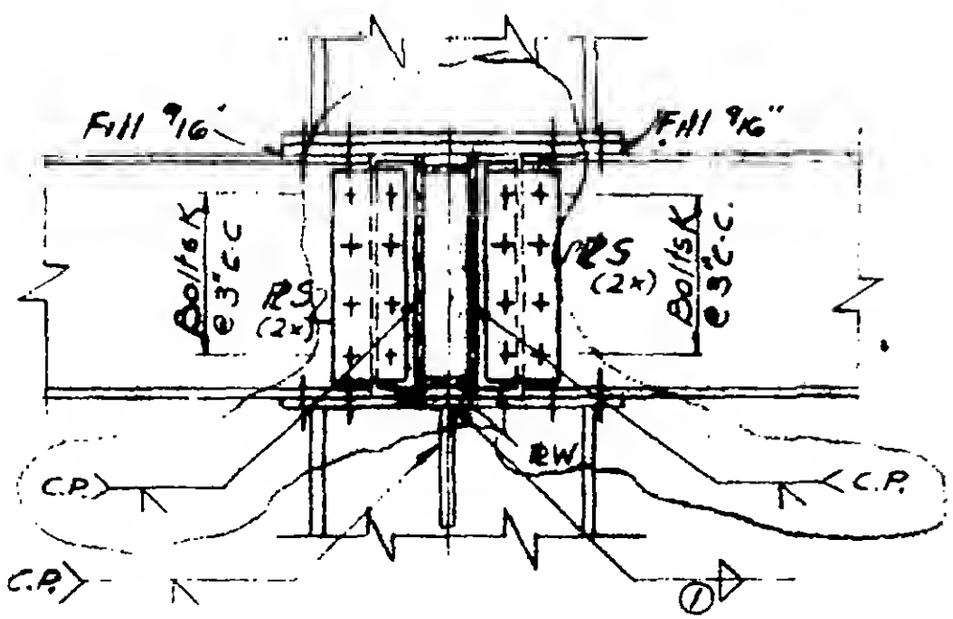

Section a-a

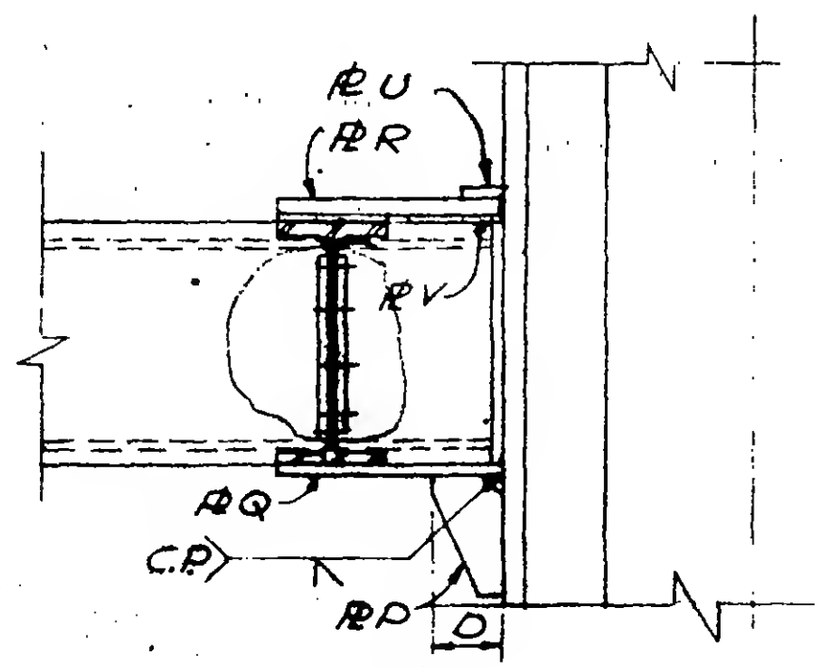

Section c-c

G-AB1-81 ALT.

WORTHINGTON, SKILLING, HELLE & JACKSON — Civil & Structural Engineers

PROJECT: THE WORLD TRADE CENTER | TITLE: CONNECTION DETAIL 274 A | DATE: 5-9-67

REVISIONS
7-28-67
9-15-67
11-14-67
12-7-67

Note: Use Alt. for all locations which do not have shop drawing approved for fabrication.

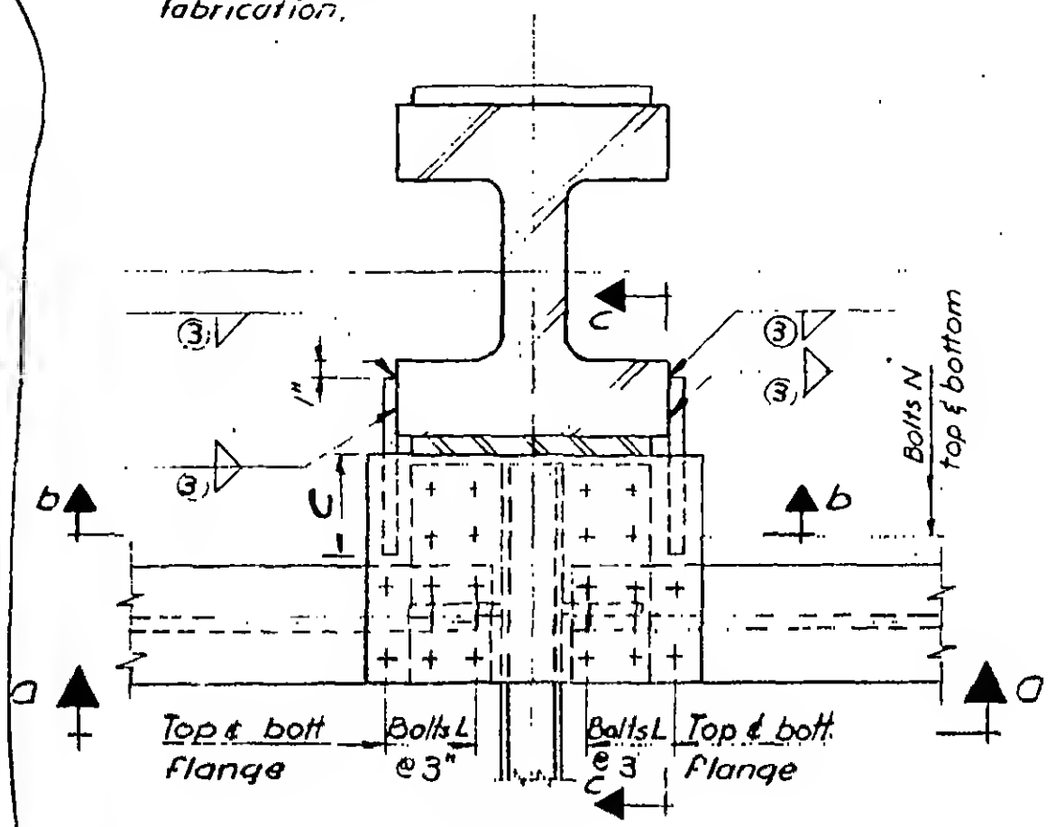

Plan

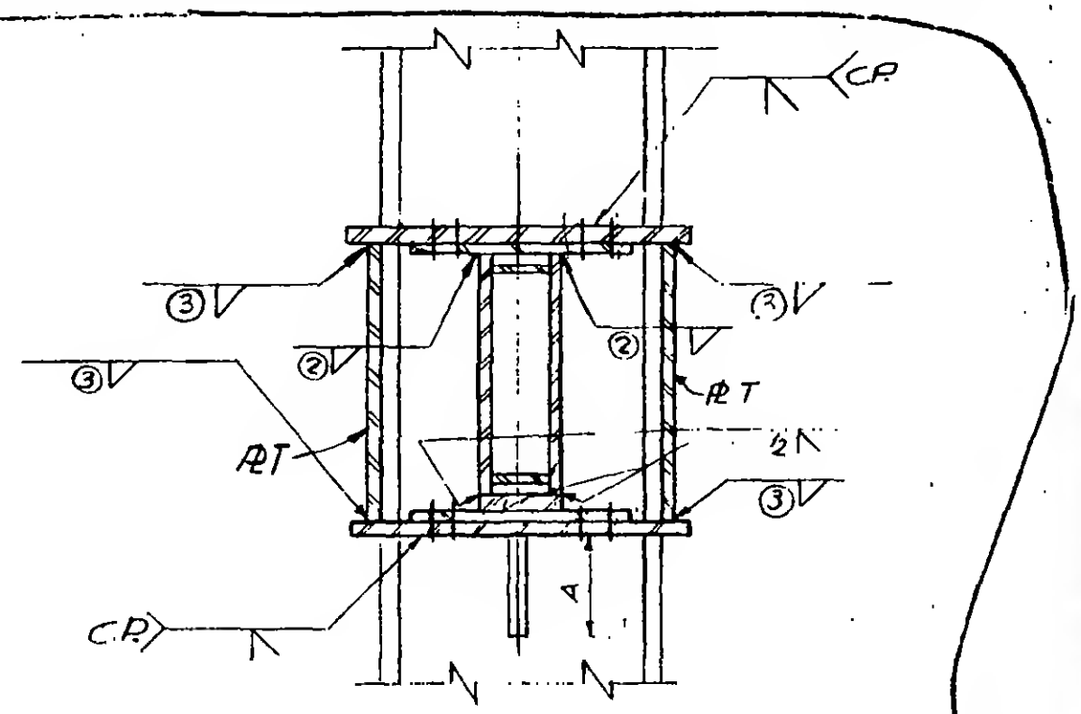

Section b-b

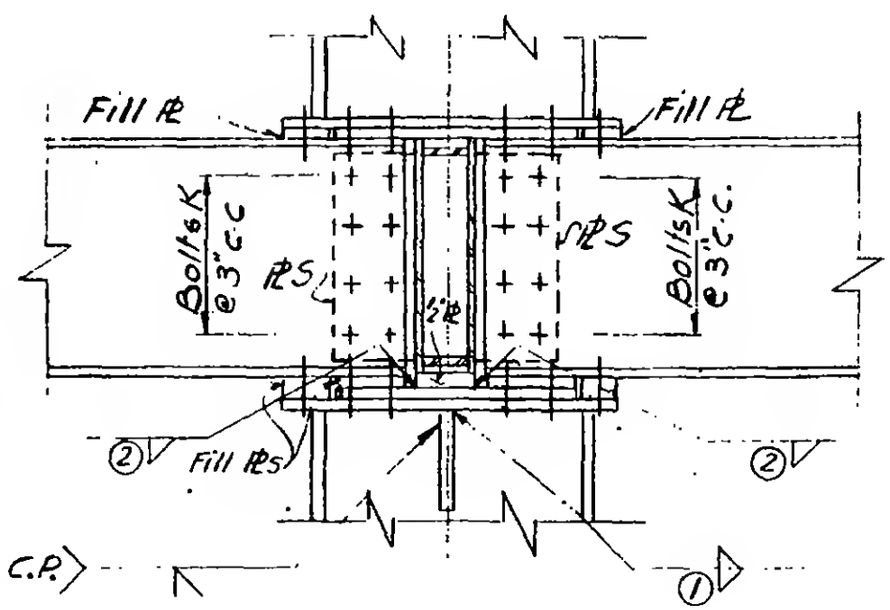

Section a-a

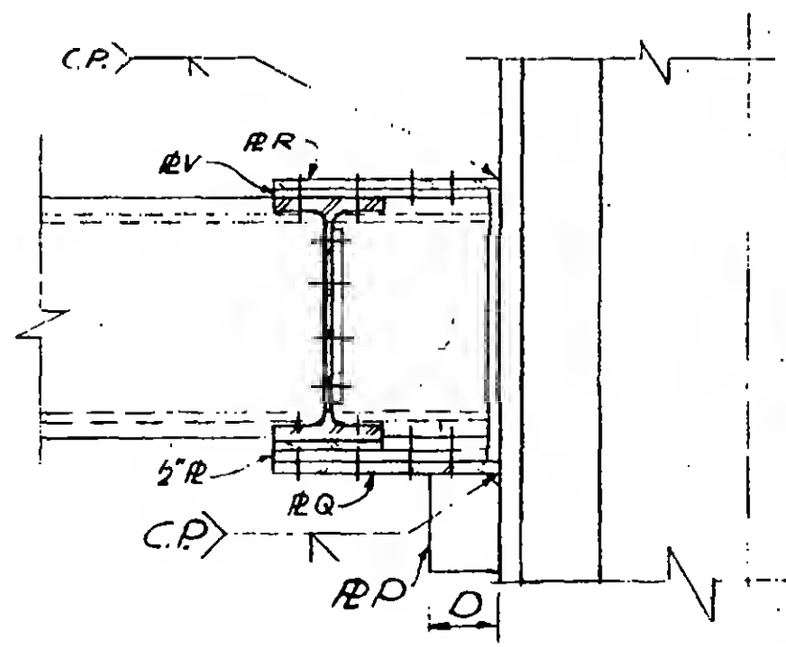

Section c-c

G-AB1-81 Alt.

WORTHINGTON, SKILLING, HELLE & JACKSON — Civil & Structural Engineers

PROJECT: THE WORLD TRADE CENTER — TITLE: CONNECTION DETAIL 274-A (ALT. 3) — DATE: [illegible]

REVISIONS
7-28-67
9-15-67
11-14-67
12-7-67
2-26-68

Note: Use Alt. for all locations which do not have shop drawing approved for fabrication.

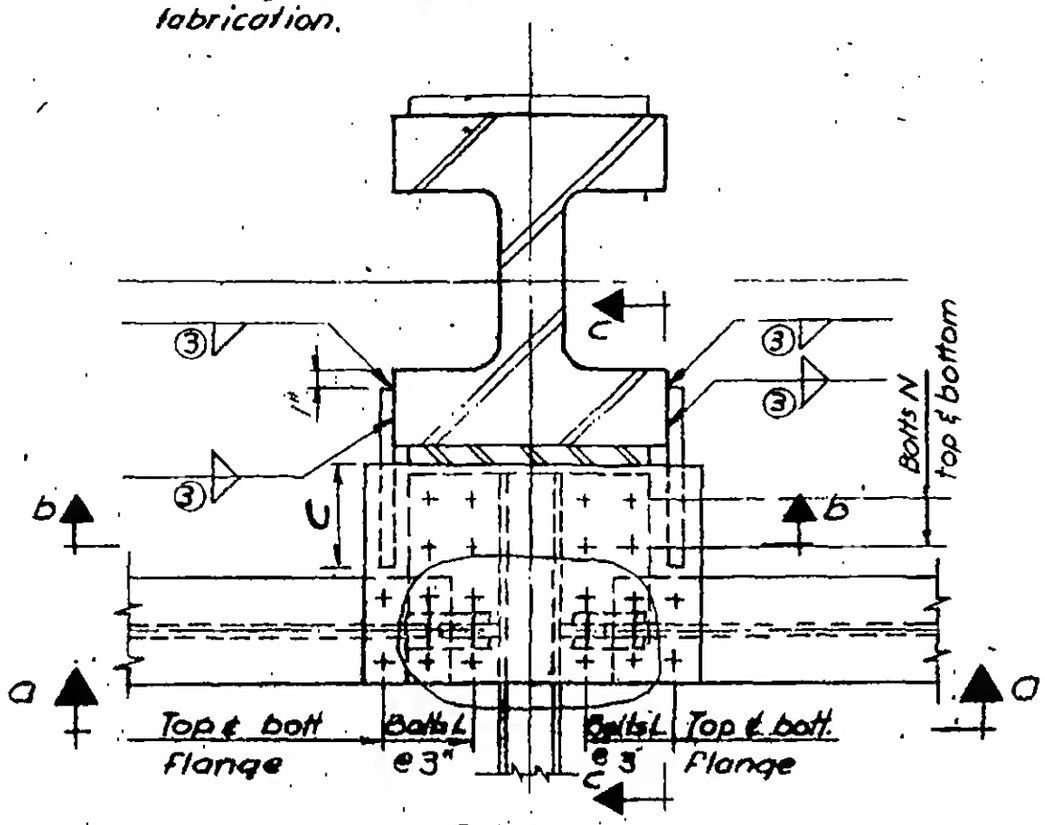

Plan

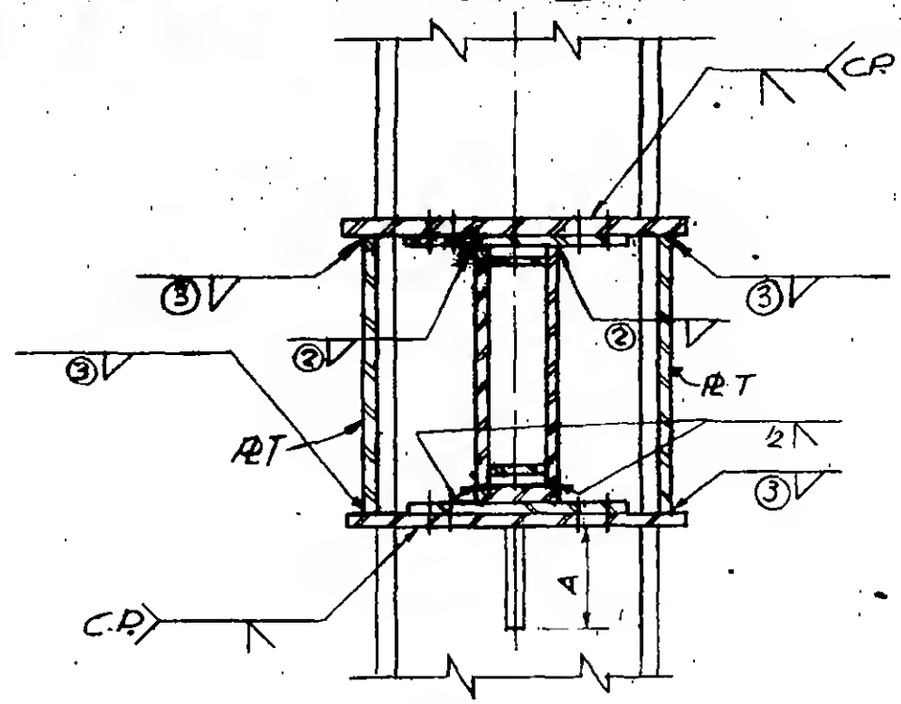

Section b-b

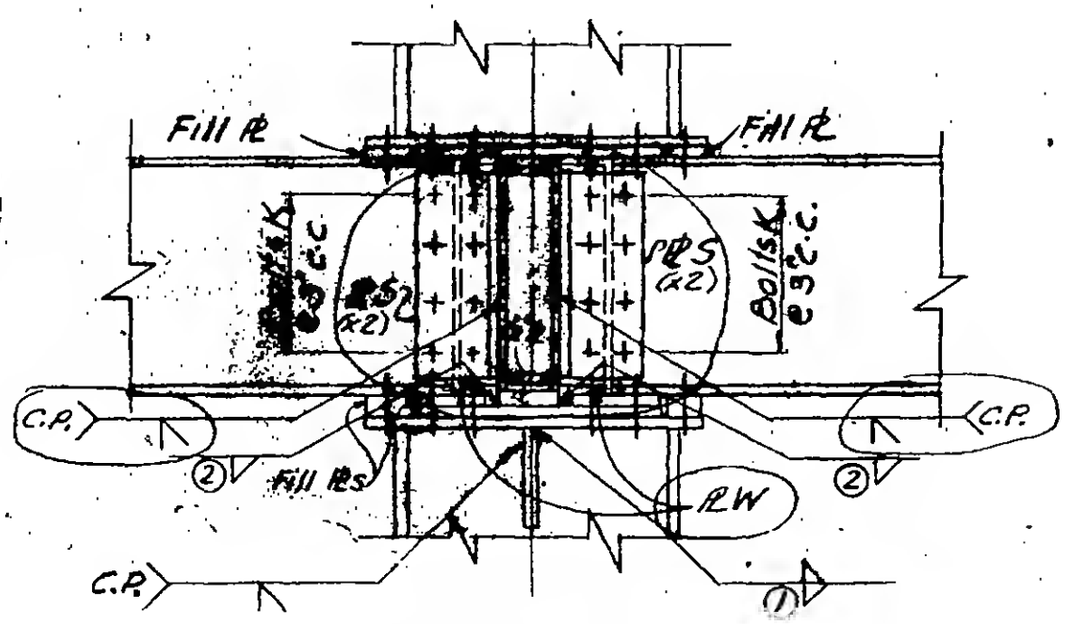

Section a-a

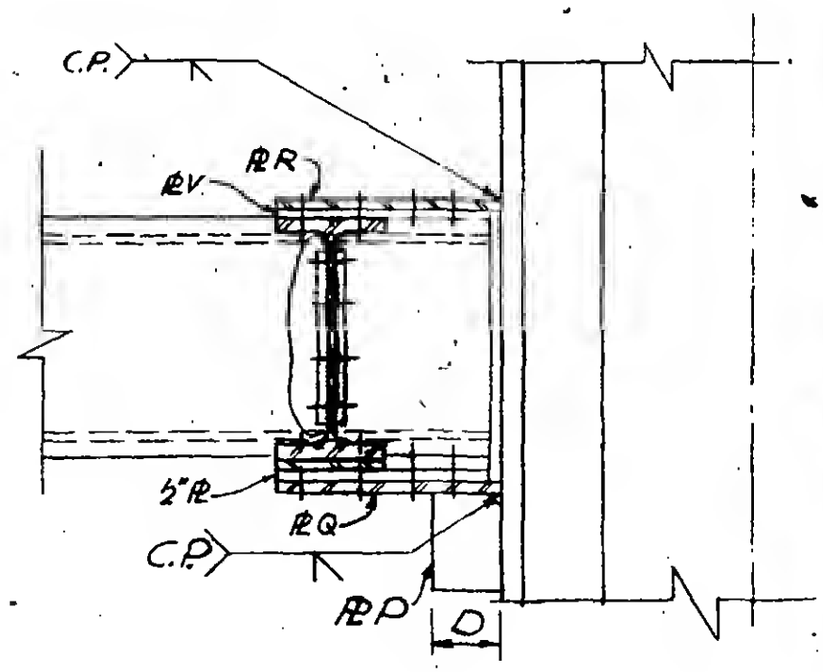

Section c-c

LESLIE E. ROBERTSON — LICENSED PROFESSIONAL ENGINEER — UNIVERSITY OF THE STATE OF NEW YORK — No. 34350

G-AB1-B (AH.5)

SKILLING - HELLE - CHRISTIANSEN - ROBERTSON Structural & Civil Engineers

PROJECT THE WORLD TRADE CENTER | TITLE SCHEDULE FOR DETAIL 274 A, B, C, D | DATE 7-28-67

REVISIONS
9-15-67
10-5-67
12-7-67

REF. DWG.	6-AB1-81	6-AB1-81.2	6-AB1-81.2	6-AB1-81.2		
	274 A	274 B	274 C	274 D		
PLATES						
P	5/8"	3/4"	5/8"	5/8"		
Q	5/8"	5/8"	1/2"	1/2"		
R	5/8"	5/8"	1/2"	1/2"		
S	9/16"	1/2"	1/2"	1/2"		
T	11/16"	—	—	—		
U	2" x 5/8"	—	—	—		
V	1/2"	1/2"	7/16"	7/16		
DIMENSIONS						
A	1'-0"	1'-3"	1'-0"	1'-2"		
B	0'-8"	—	—	—		
C	0'-7 1/2"	—	—	—		
D	0'-6"	0'-7"	—	—		
BOLTS						
K	8-3/4"φ	8-3/4"φ	8-3/4"φ	8-3/4"φ		
L	6-1 1/8"φ	6-7/8"φ	6-7/8"φ	6-7/8"φ		
M	—	4-3/4"φ	6-3/4"φ	6-3/4"φ		
N	8-7/8"φ	—	—	—		
WELDS						
①	5/16	5/16	5/16	5/16		
②	1/2	5/16	5/16	5/16		
③	5/8	—	—	—		

LICENSED LESLIE ETTSON No. 34360 UNIVERSITY OF THE STATE OF NE

6-AB1-81.1

SKILLING - HELLE - CHRISTIANSEN - ROBERTSON Structural & Civil Engineers

PROJECT: THE WORLD TRADE CENTER | TITLE: SCHEDULE FOR DETAIL 274 A,B (ALT.) | DATE: 7-28-67

REVISIONS

9-15-67
10-11-67

REF. DWG.	6-AB1-81	6-AB1-81.2	6-AB1-81.1 ALT.			
	274 A	274 B	* Alt. 274 A			* Use at following column TOWER A
PLATES						Floor / Column
P	5/8"	3/4"	5/8"			10,11 / 702
Q	5/8"	5/8"	5/8"			10,11 / 707
R	5/8"	5/8"	5/8"			12-16 / 702
S	3/8"	1/2"	3/8"			12-16 / 707
T	11/16"		11/16"			17 / 702
U	2 x 5/8"	—	2 x 5/8"			17 / 707
V	1/2"	1/2"	1/2"			18 / 702
W	—	—	Same as web thickness of beam			19 / 702
DIMENSIONS						20 / 702
A	1'-0"	1'-3"	1'-0"			21-23 / 702
B	0-8"	—	0'-8"			24 / 702
C	0-7 1/2"		0'-7 1/2"			25 / 702
D	0-6"	0-7"	0'-6"			26 / 702
						27 / 702
						28-31 / 702
BOLTS						32 / 702
K	8-3/4 ϕ	8-3/4 ϕ	4-3/4" ϕ			33 / 702
L	6-1 1/8" ϕ	6-7/8 ϕ	6-1 1/8" ϕ			
M	—	4-3/4 ϕ	—			
WELDS						
1	5/16	5/16	5/16			
2	1/2	5/16	1/2			
3	5/8	—	5/8			

G-AB1-81.1 ALT.

SKILLING - HELLE - CHRISTIANSEN - ROBERTSON Structural & Civil Engineers

PROJECT: THE WORLD TRADE CENTER | TITLE: SCHEDULE FOR DETAIL 274 A, B, C, D (A (ALT. 5)) | DATE: 7-28-67

REVISIONS

9-15-67
10-5-67
12-7-67
2-26-68

REF. DWG.	6-AB1-81	6-AB1-81.2	6-AB1-81.2	6-AB1-81.2	6-AB1-81 (Alt. 5)
	274 A	274 B	274 C	274 D	274A (Alt. 5)
PLATES					
P	5/8"	3/4"	5/8"	5/8"	5/8"
Q	5/8"	5/8"	1/2"	1/2"	5/8"
R	5/8"	5/8"	1/2"	1/2"	5/8"
S	9/16"	1/2"	1/2"	1/2"	9/16"
T	11/16"	—	—	—	11/16"
U	2" x 5/8"	—	—	—	2" x 5/8"
V	1/2"	1/2"	7/16"	7/16	1/2"
W	—	—	—	—	Same as web thickness of beam
DIMENSIONS					
A	1'-0"	1'-3"	1'-0"	1'-2"	1'-0"
B	0'-8"	—	—	—	0'-8"
C	0'-7 1/2"	—	—	—	0'-7 1/2"
D	0'-6"	0'-7"	—	—	0'-6"
BOLTS					
K	8-3/4"φ	8-3/4"φ	8-3/4"φ	8-3/4"φ	8-3/4"φ
L	6-1 1/8"φ	6-7/8"φ	6-7/8"φ	6-7/8"φ	6-1 1/8"φ
M	—	4-3/4"φ	6-3/4"φ	6-3/4"φ	—
N	8-7/8"φ	—	—	—	8-7/8"φ
WELDS					
1	5/16	5/16	5/16	5/16	5/16
2	1/2	5/16	5/16	5/16	1/2
3	5/8	—	—	—	5/8

6-AB1-81. (Alt. 5)

SKILLING - HELLE - CHRISTIANSEN - ROBERTSON Structural & Civil Engineers

PROJECT: THE WORLD TRADE CENTER | TITLE: CONNECTION DETAIL 274 B, C, D | DATE: 9-15-67

REVISIONS
10-5-67

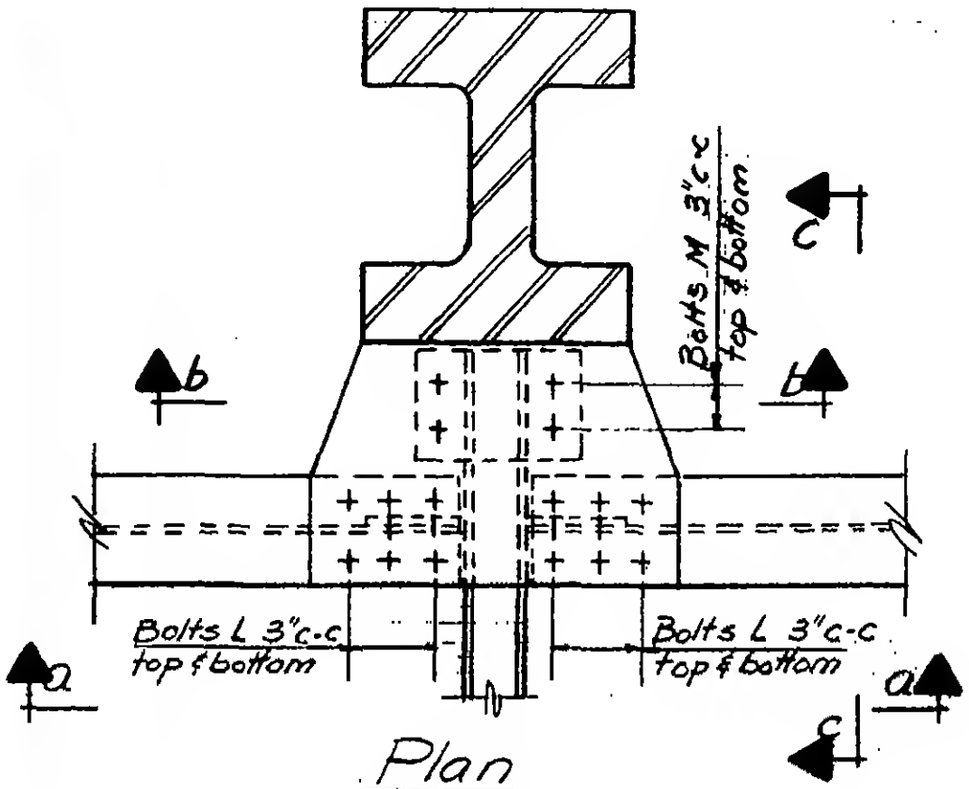

Plan

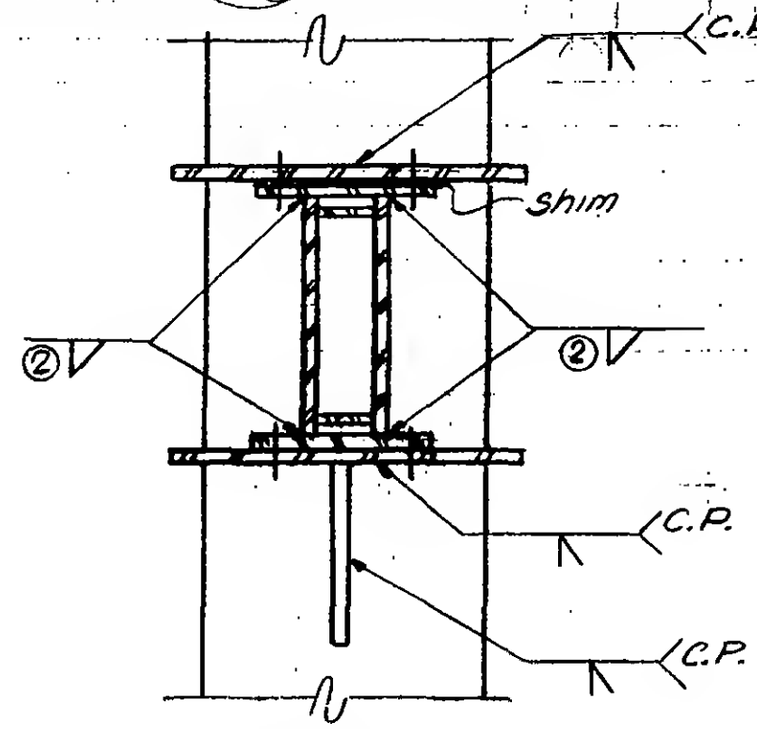

Section b-b

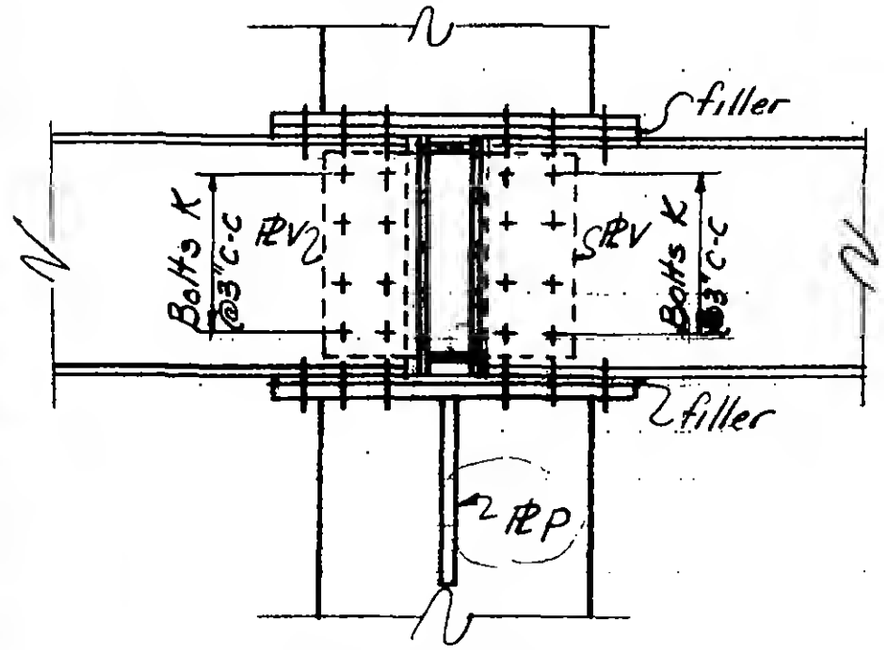

Section a-a

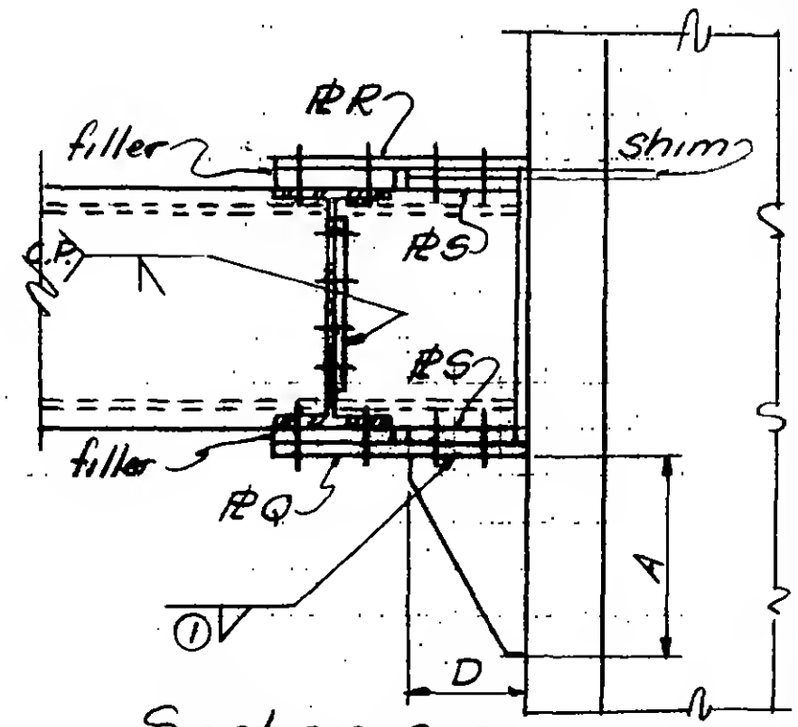

Section c-c

LICENSED PROFESSIONAL ENGINEER
LESLIE E. ROBERTSON
No. 34360
UNIVERSITY OF THE STATE OF NEW YORK

6-AB1-81.2

WORTHINGTON, SKILLING, HELLE & JACKSON — Civil & Structural Engineers

PROJECT: THE WORLD TRADE CENTER | TITLE: CONNECTION DETAIL 275 A | DATE: 5-22-67

REVISIONS

10-2-67
1-24-68

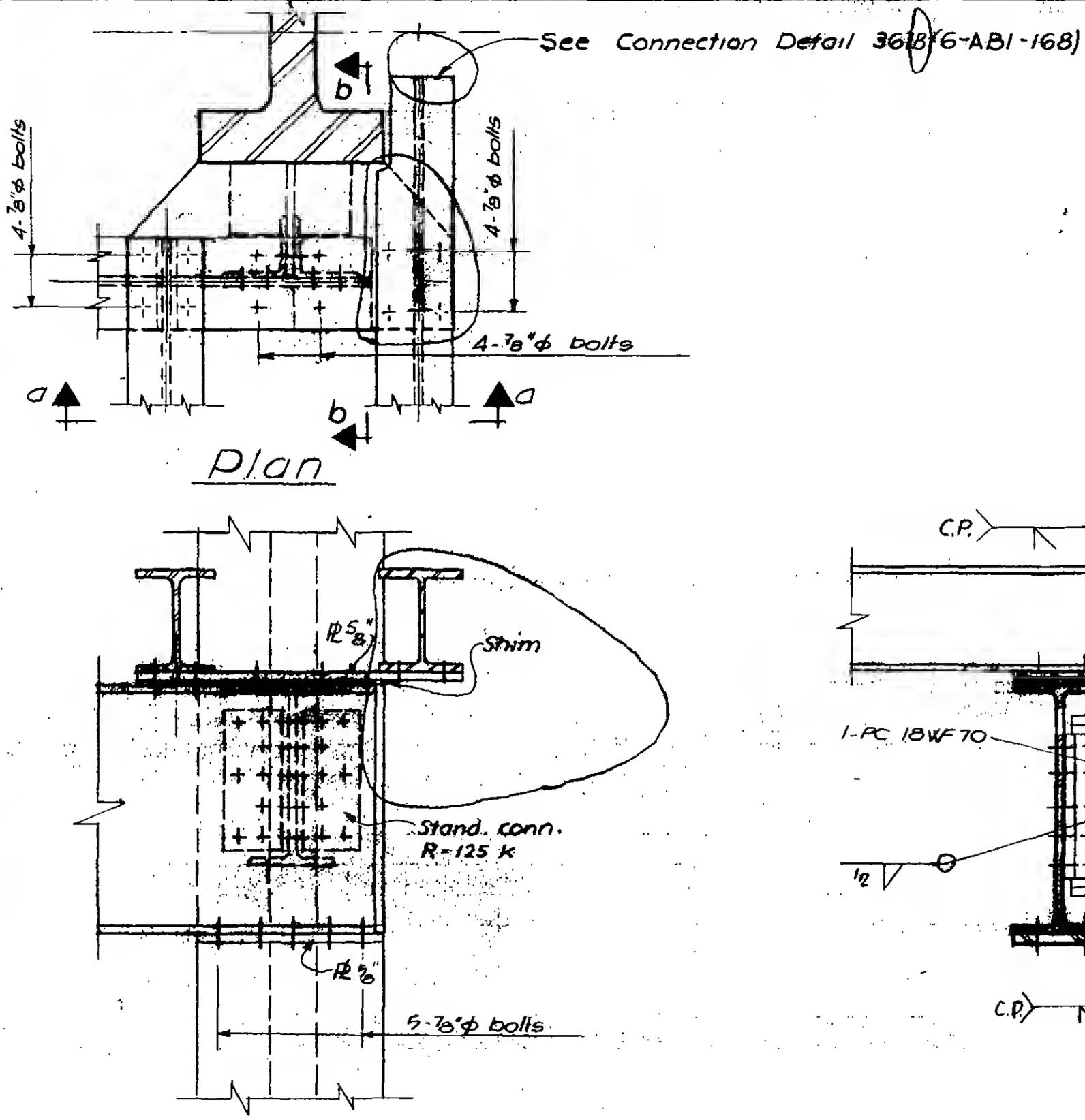

6-ABI-82

WORTHINGTON, SKILLING, HELLE & JACKSON — Civil & Structural Engineers

PROJECT: THE WORLD TRADE CENTER | TITLE: CONNECTION DETAIL 276 A | DATE: 6-5-67

REVISIONS
9-15-67
11-10-67

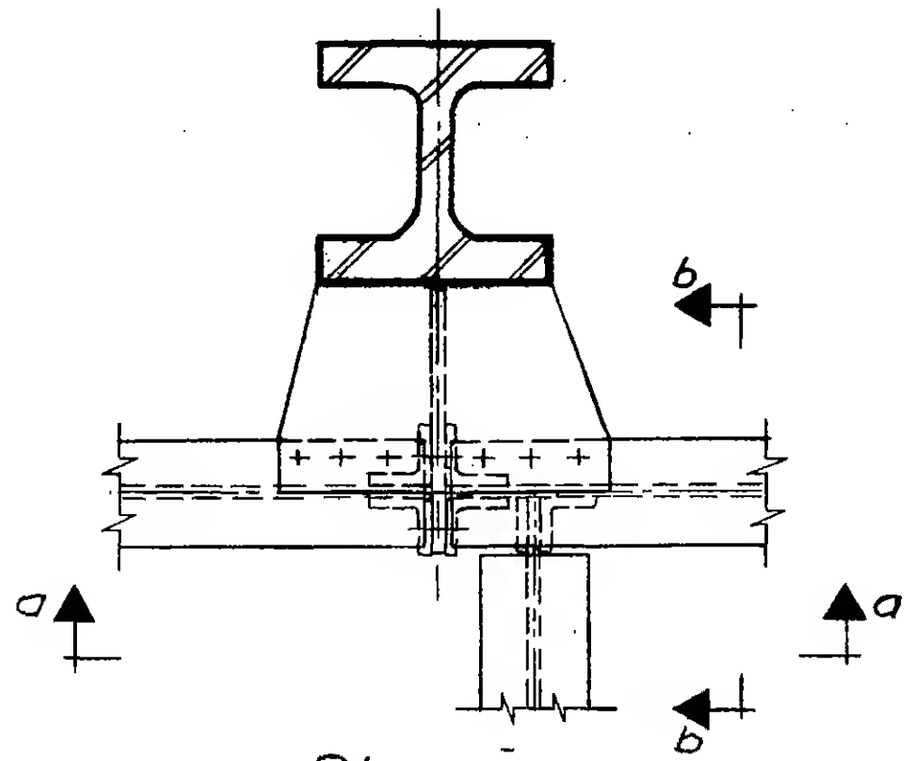

Plan

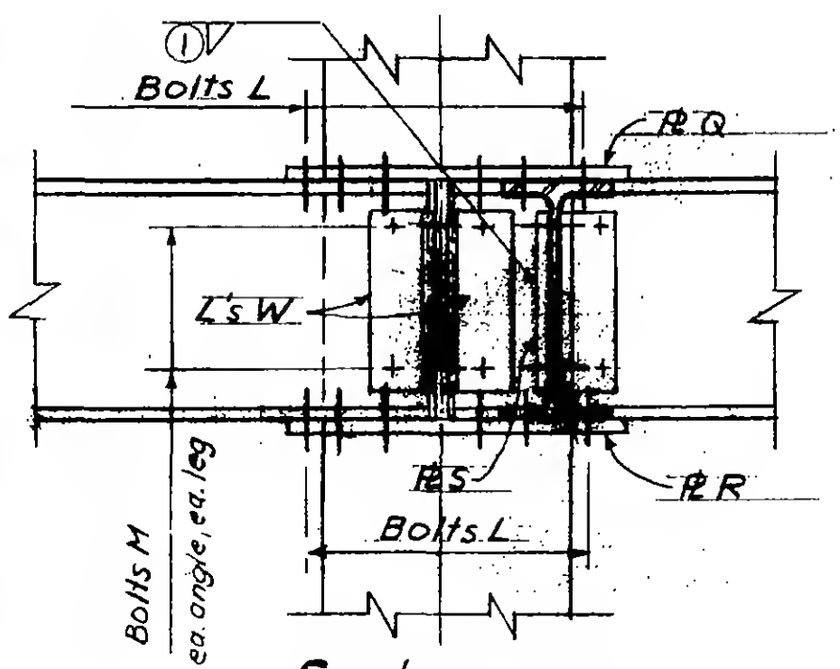

Section a-a

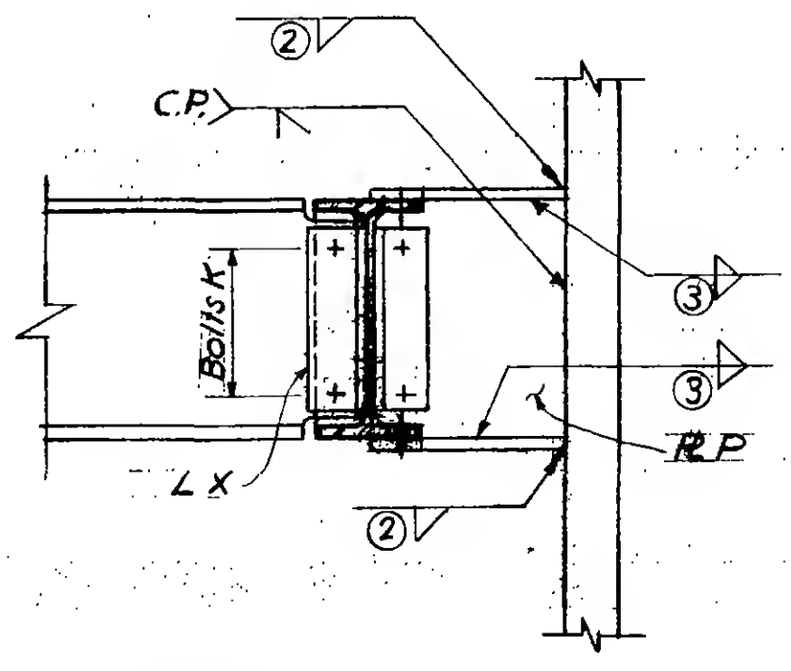

Section b-b

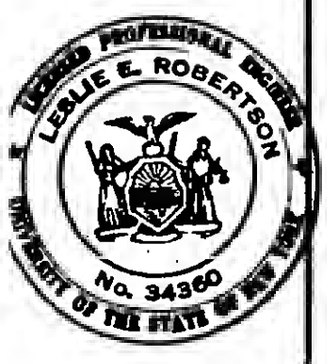

6-AB1-83

WORTHINGTON, SKILLING, HELLE & JACKSON — Civil & Structural Engineers

PROJECT: THE WORLD TRADE CENTER | TITLE: CONNECTION DETAIL 276 A (ALT. 1) | DATE: 6-5-67

REVISIONS
9-15-67
11-10-67
2-26-68

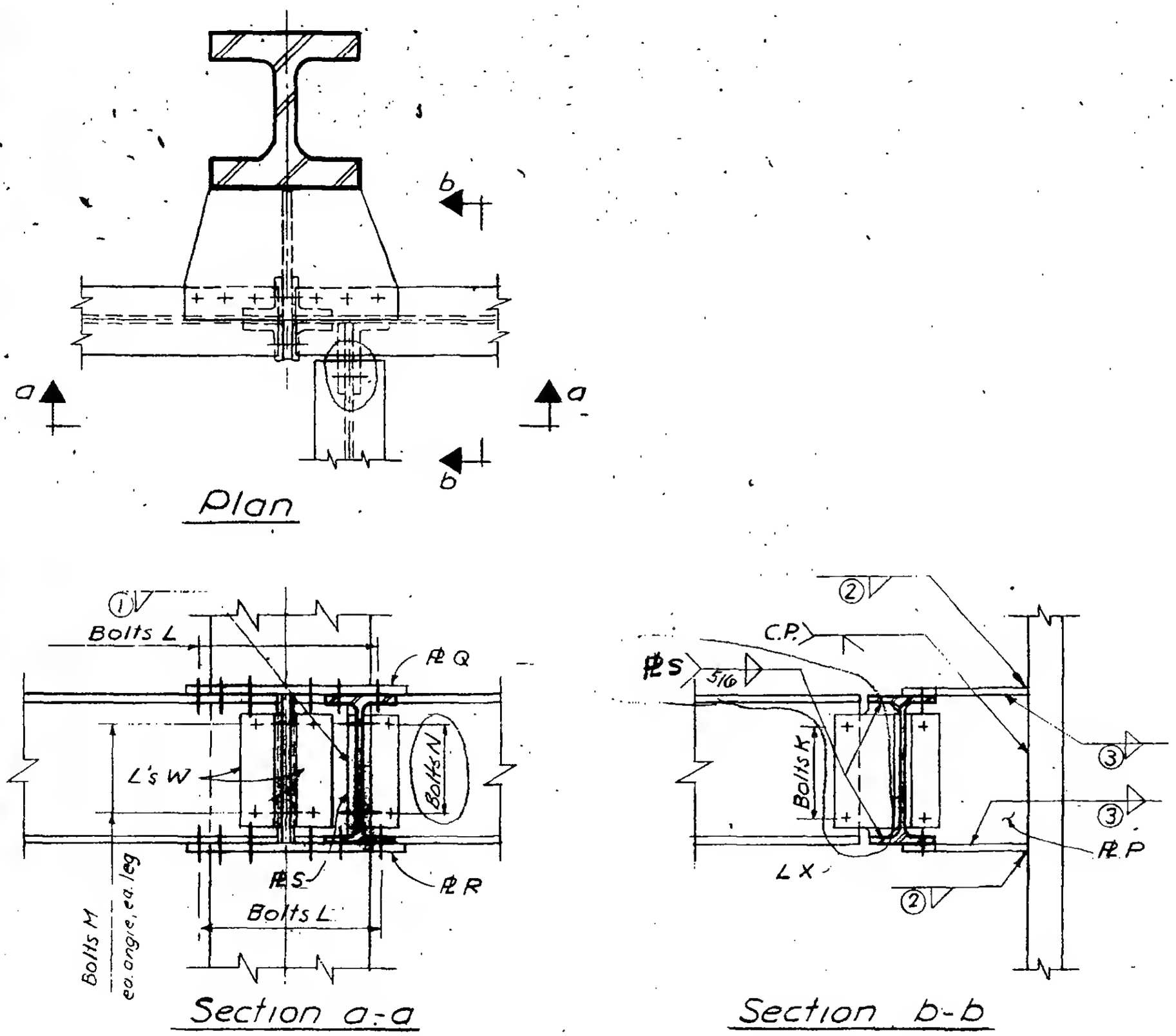

LICENSED PROFESSIONAL ENGINEER LESLIE E. ROBERTSON No. 34360 UNIVERSITY OF THE STATE OF NEW YORK

6-AB1-83 (Alt. 1)

SKILLING - HELLE - CHRISTIANSEN - ROBERTSON Structural & Civil Engineers

PROJECT: THE WORLD TRADE CENTER TITLE: SCHEDULE FOR DETAIL 276 A DATE: 9-15-67

REVISIONS

11-10-67

	276 A
PLATES	
P	1"
Q	1/2"
R	1/2"
S	3/8"
ANGLES	
W	4 × 3 1/2 × 3/8
X	4 × 3 1/2 × 5/16
BOLTS	
K	3 - 3/4" φ
L	6 - 1" φ
M	4 - 7/8" φ
WELDS	
①	5/16
②	1/2
③	7/16

LICENSED PROFESSIONAL ENGINEER
LESLIE E. ROBERTSON
No. 34360
UNIVERSITY OF THE STATE OF NEW YORK

6-AB1-83.1

SKILLING - HELLE - CHRISTIANSEN - ROBERTSON Structural & Civil Engineers

PROJECT: THE WORLD TRADE CENTER

TITLE: SCHEDULE FOR DETAIL 276 A (A(ALT.1))

DATE: 9-15-67

REVISIONS
11-10-67
2-26-68

	276 A	276 A (Alt.1)
PLATES		
P	1"	1"
Q	1/2"	1/2"
R	1/2"	1/2"
S	3/8"	1/2"
ANGLES		
W	4 x 3 2 x 3/8	4 x 3 1/2 x 3/8
X	4 x 3 2 x 5/16	8 x 4 x 1/2
BOLTS		
K	3 - 3/4 φ	4 - 7/8" φ
L	6 - 1" φ	6 - 1" φ
M	4 - 7/8" φ	4 - 7/8" φ
N	—	4 - 3/4" φ
WELDS		
1	5/16	5/16
2	1/2	1/2
3	7/16	7/16

6-AE1-83.1(Alt.1)

SKILLING - HELLE - CHRISTIANSEN - ROBERTSON Structural & Civil Engineers

PROJECT: THE WORLD TRADE CENTER | TITLE: CONNECTION DETAIL 276 B | DATE: 2-9-68

REVISIONS

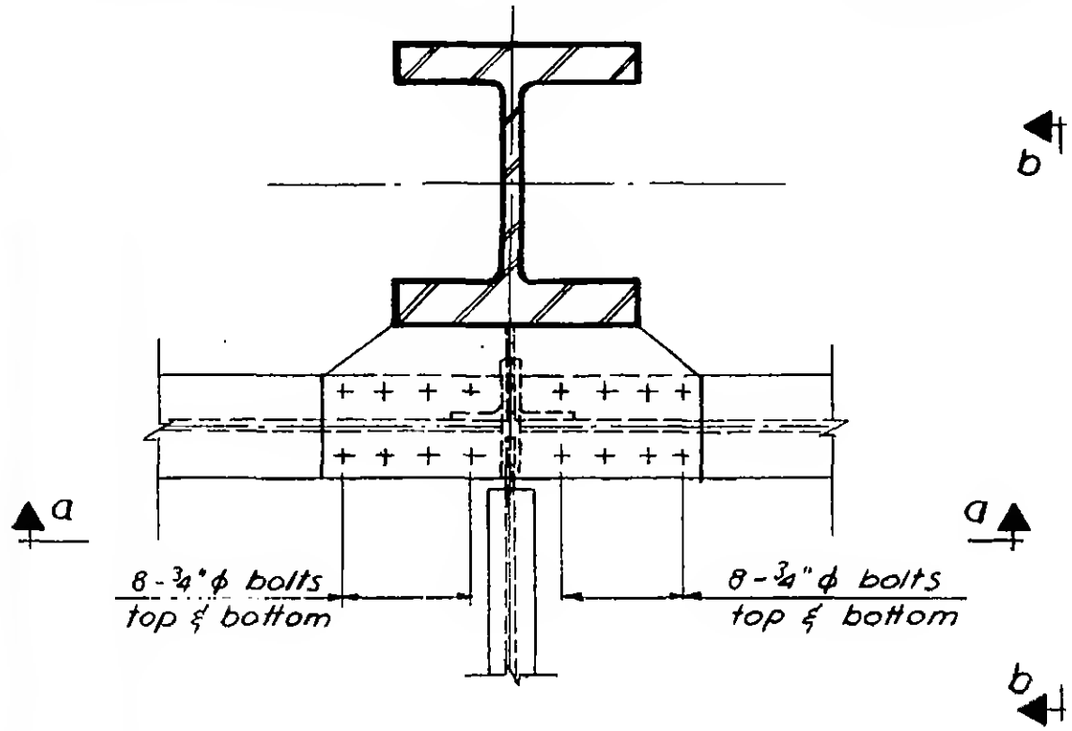

Plan

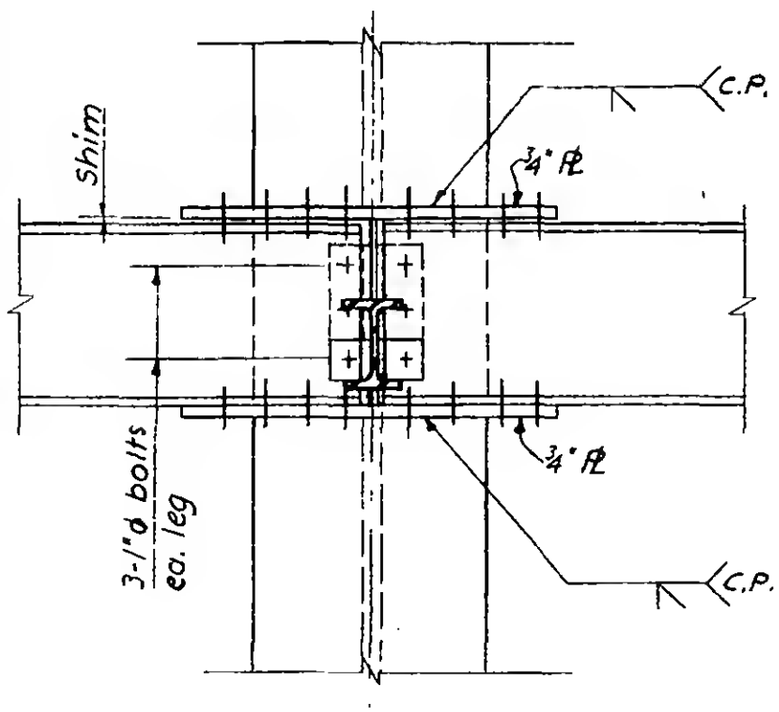

Section a-a

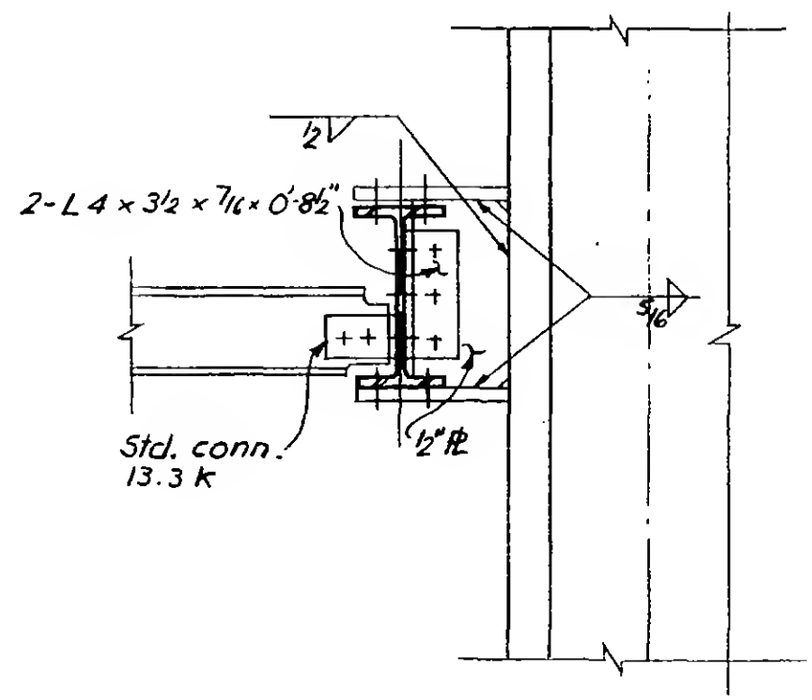

Section b-b

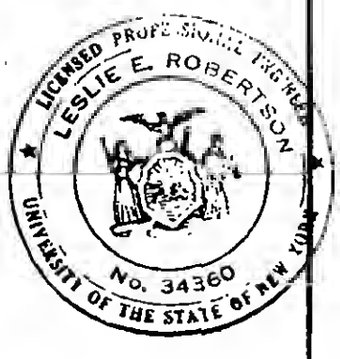

6 - AB1 - 83.2

SKILLING - HELLE - CHRISTIANSEN - ROBERTSON Structural & Civil Engineers

PROJECT: THE WORLD TRADE CENTER | TITLE: CONNECTION DETAIL 277 A | DATE: 7-20-67

REVISIONS

10-5-67

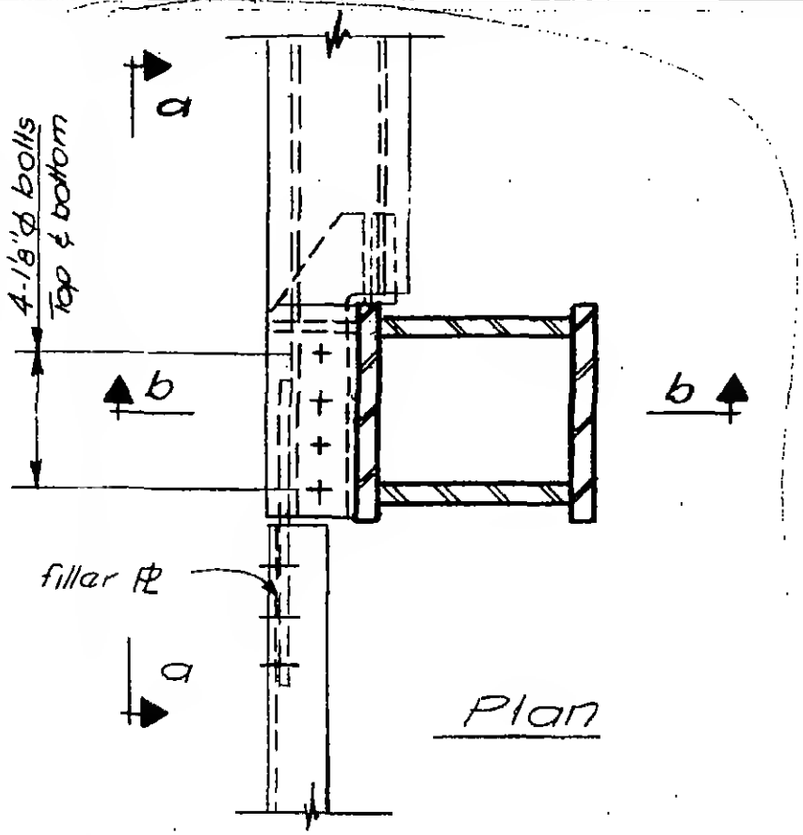

Plan

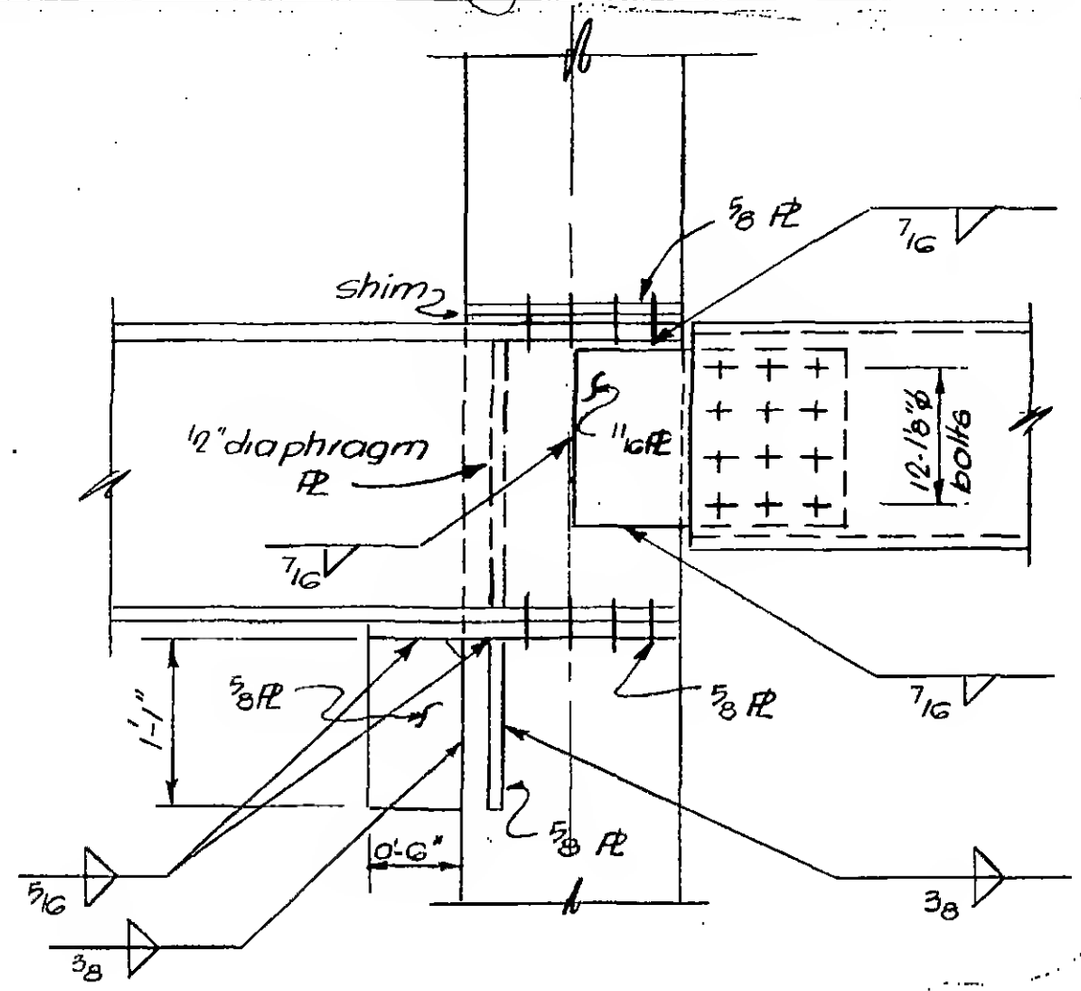

Section a-a

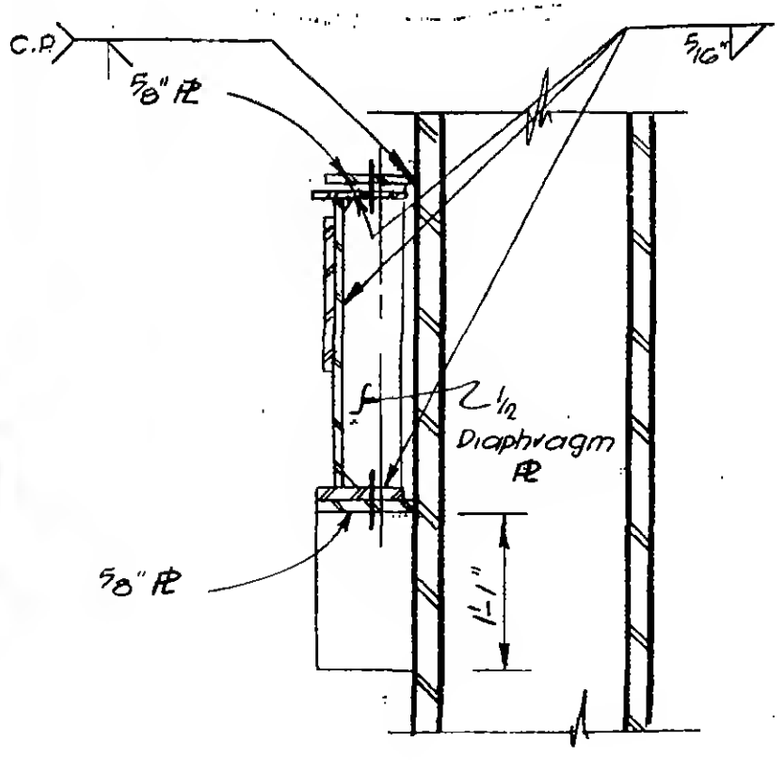

Section b-b

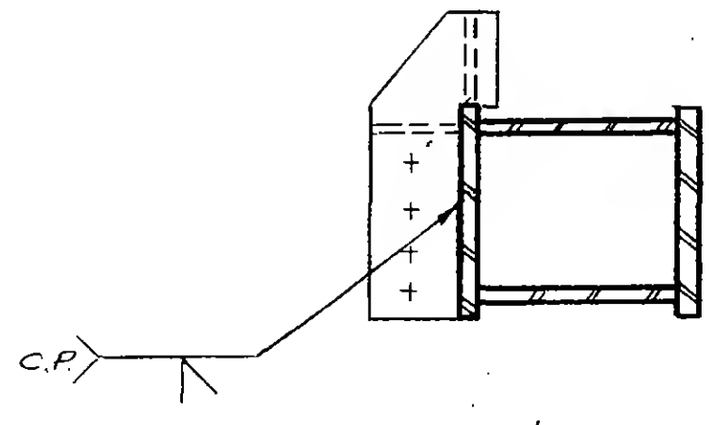

Seat PL detail.

6-ABI-84

WORTHINGTON, SKILLING, HELLE & JACKSON — Civil & Structural Engineers

PROJECT: THE WORLD TRADE CENTER | TITLE: CONNECTION DETAIL 278 A | DATE: 5-1-67

REVISIONS
7-28-67
6-24-68

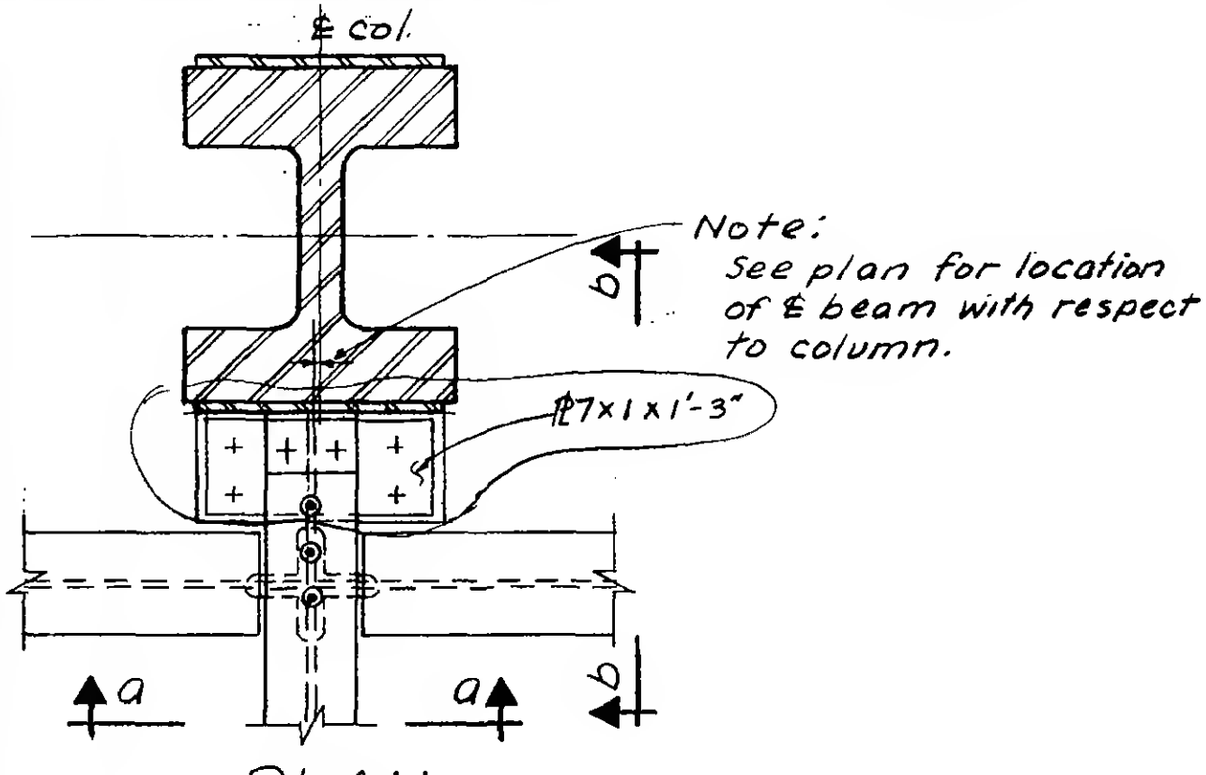

PLAN

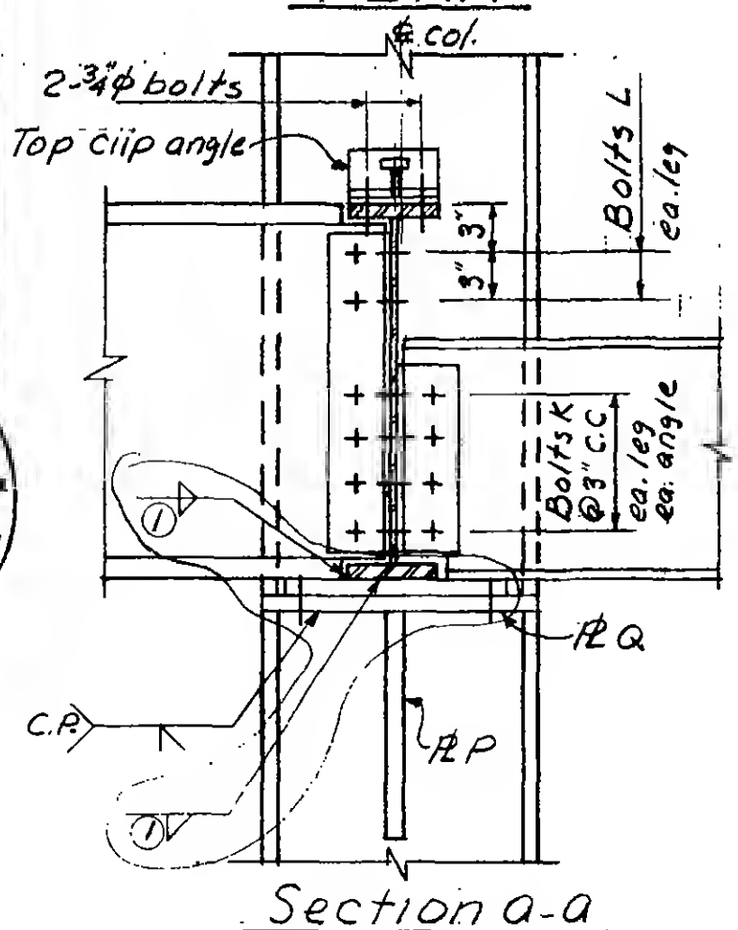

Section a-a

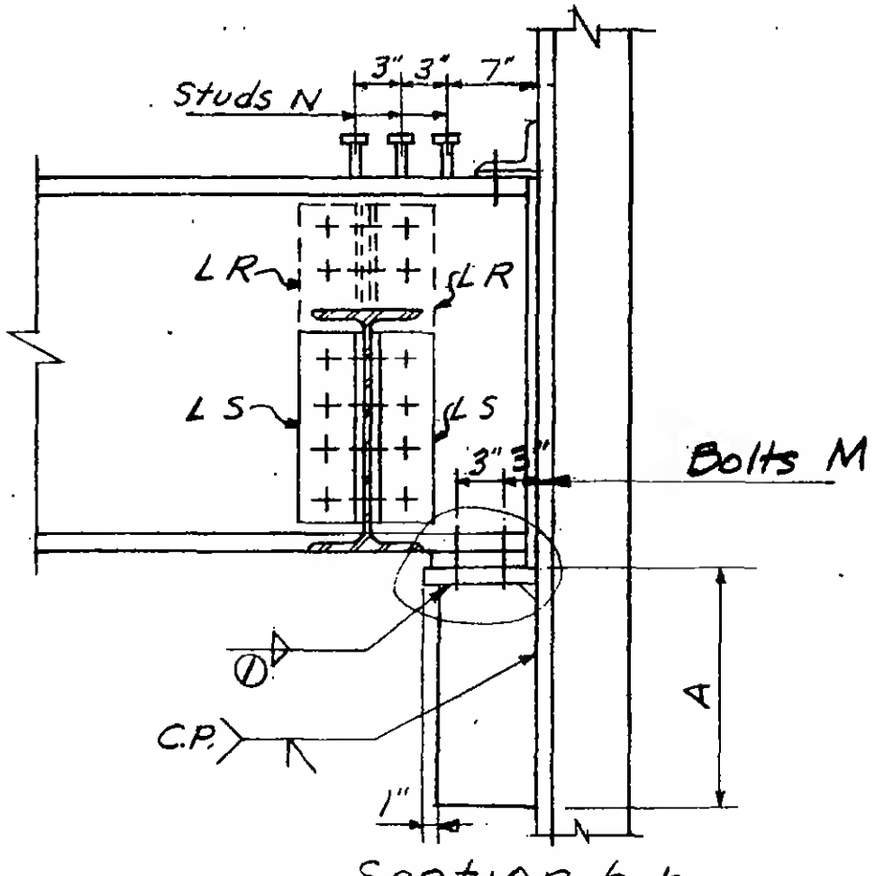

Section b-b

6-AB1-85

WORTHINGTON, SKILLING, HELLE & JACKSON — Civil & Structural Engineers

PROJECT: THE WORLD TRADE CENTER | TITLE: SCHEDULE FOR DETAIL 278A | DATE: 7-28-67

REVISIONS

	278 A
PLATES	
P	6" x 1'4"
Q	1'4"
ANGLES	
R	4 x 3½ x ⅜
S	4 x 3½ x ⅜
DIMENSIONS	
A	1'-4"
BOLTS	
K	4-⅞"ϕ
L	2-¾"ϕ
M	4-1⅛"ϕ
WELDS	
①	⅜
STUDS	
N	3-¾"ϕ x 0'-3"

LICENSED PROFESSIONAL ENGINEER LESLIE E. ROBERTSON No. 34260 THE STATE OF NEW YORK

6-AB1-85.1

WORTHINGTON, SKILLING, HELLE & JACKSON — Civil & Structural Engineers

PROJECT: THE WORLD TRADE CENTER | TITLE: CONNECTION DETAIL 279 A | DATE: 6-19-67

REVISIONS

8-14-67

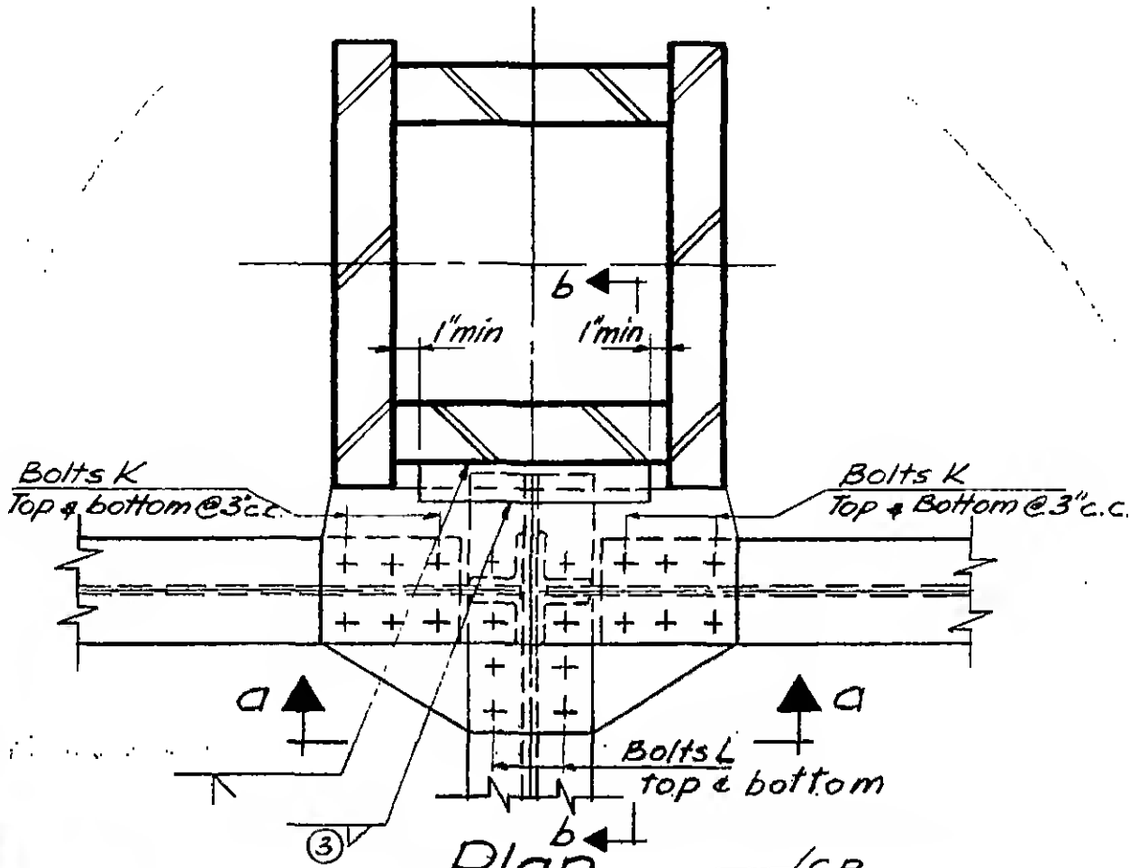

Plan

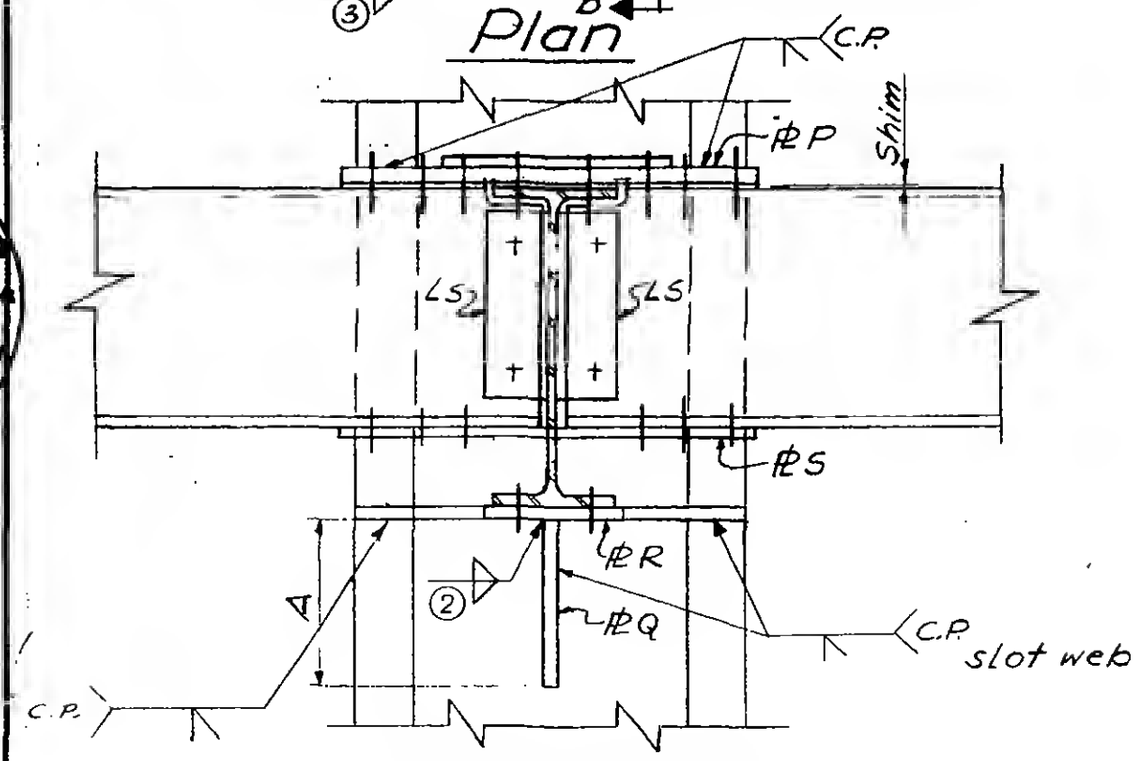

Section a-a

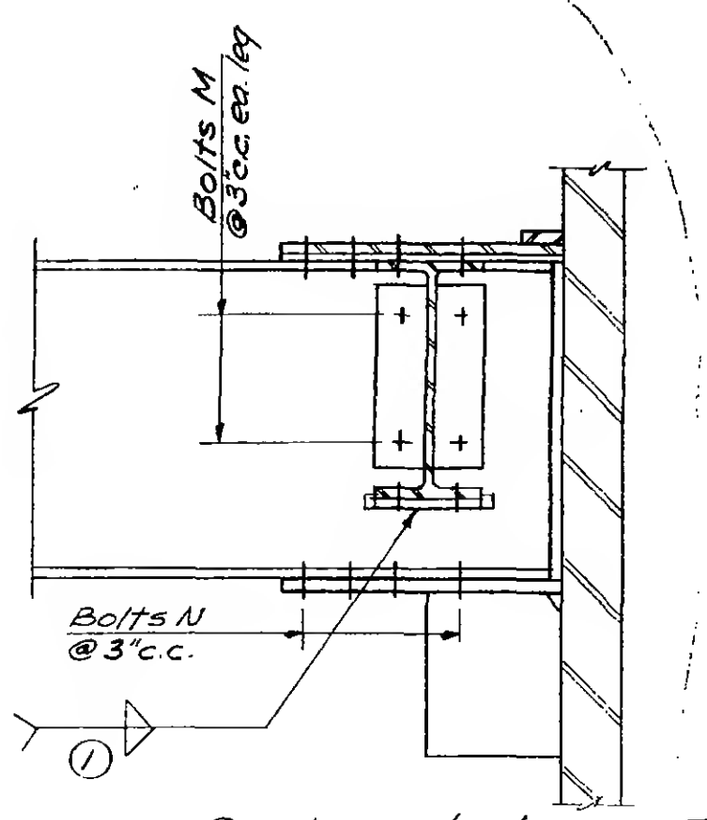

Section b-b

LICENSED PROFESSIONAL ENGINEER LESLIE E. ROBERTSON No. 34360 STATE OF NEW YORK

6-AB1-86

SKILLING - HELLE - CHRISTIANSEN - ROBERTSON Structural & Civil Engineers

PROJECT: THE WORLD TRADE CENTER

TITLE: SCHEDULE FOR DETAIL 279 A

DATE: 8-14-67

REVISIONS

	279 A
PLATES	
P	3/4"
Q	6"×3/4"
R	3/4"
S	3/4"
ANGLES	
S	4×3½×3/8×0'-8½"
DIMENSION	
A	1'-6"
BOLTS	
K	6-1 1/8" ϕ
L	10-1" ϕ
M	3-3/4" ϕ
N	10-1" ϕ
WELDS	
1	5/16"
2	3/8"
3	3/4"

LICENSED PROFESSIONAL ENGINEER
LESLIE E. ROBERTSON
No. 34360
UNIVERSITY OF THE STATE OF NEW YORK

6-AB1-86.1

WORTHINGTON, SKILLING, HELLE & JACKSON — Civil & Structural Engineers

PROJECT: THE WORLD TRADE CENTER | TITLE: CONNECTION DETAIL 280 A | DATE: 6-19-67

REVISIONS

8-14-67

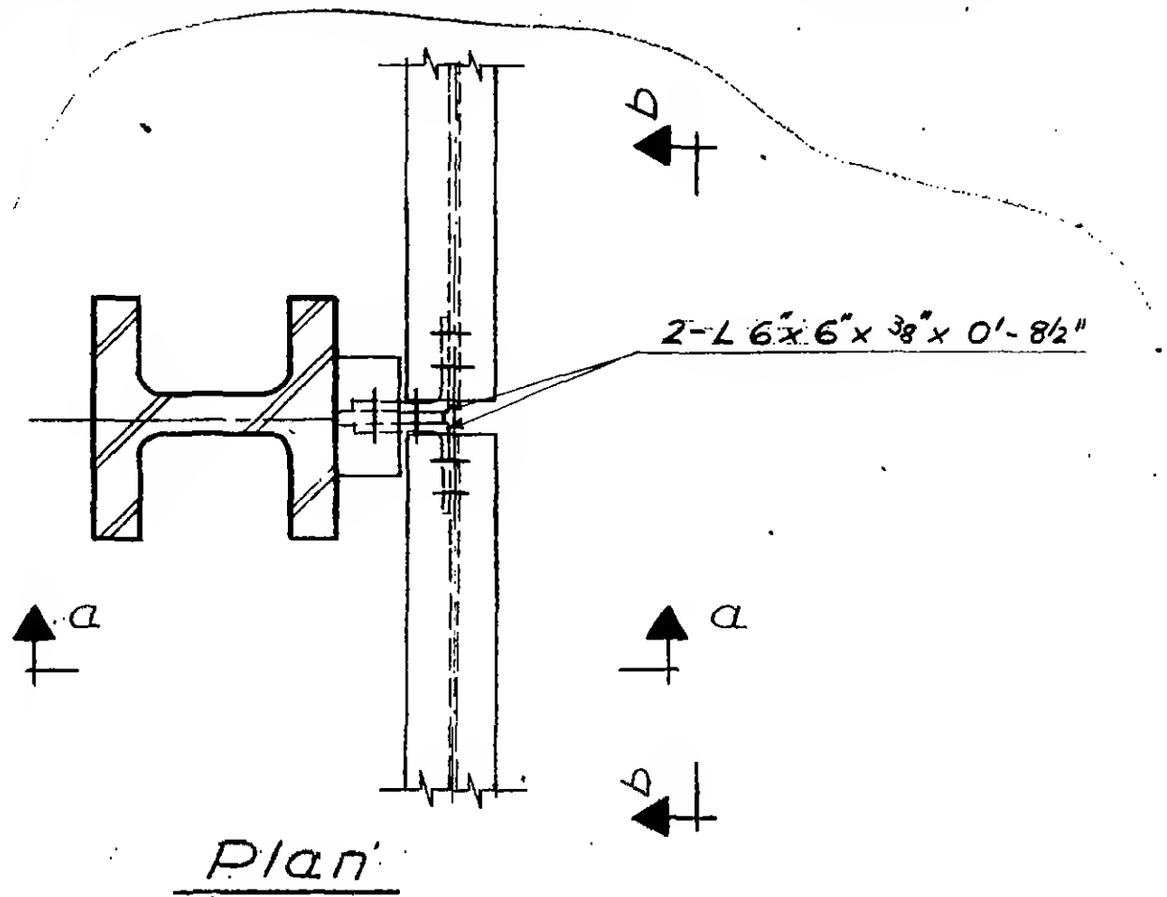

Plan

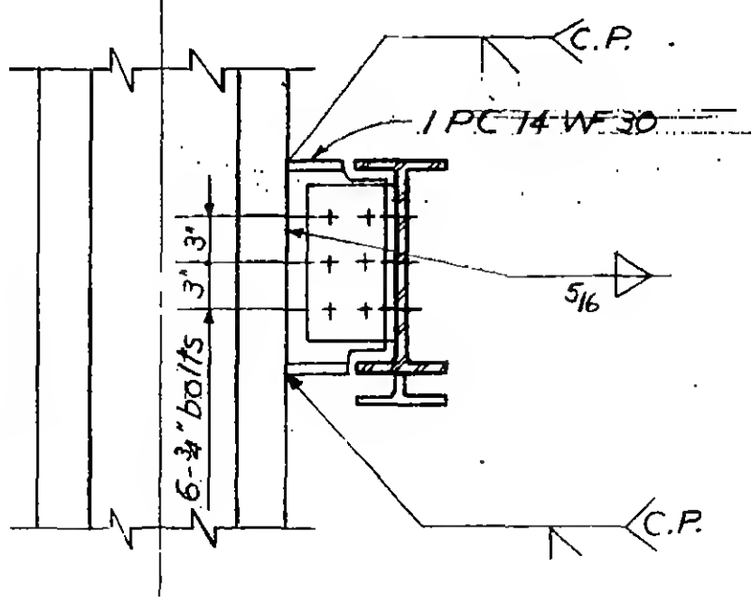

Section a-a

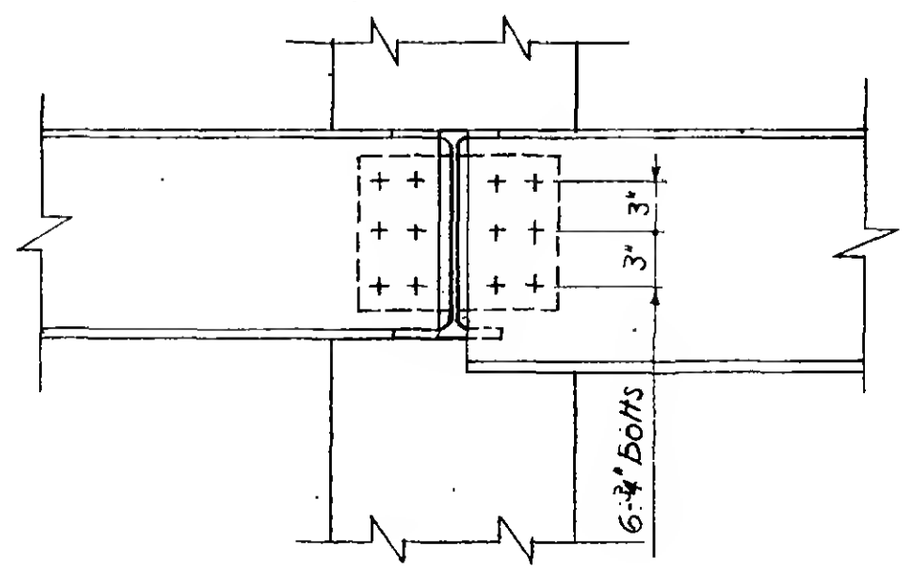

Section b-b

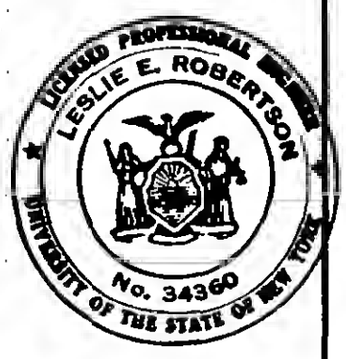

6-AB1-87

WORTHINGTON, SKILLING, HELLE & JACKSON — Civil & Structural Engineers

PROJECT: THE WORLD TRADE CENTER | TITLE: CONNECTION DETAIL 281A | DATE: 6-5-67

REVISIONS
10-2-67
2-21-68

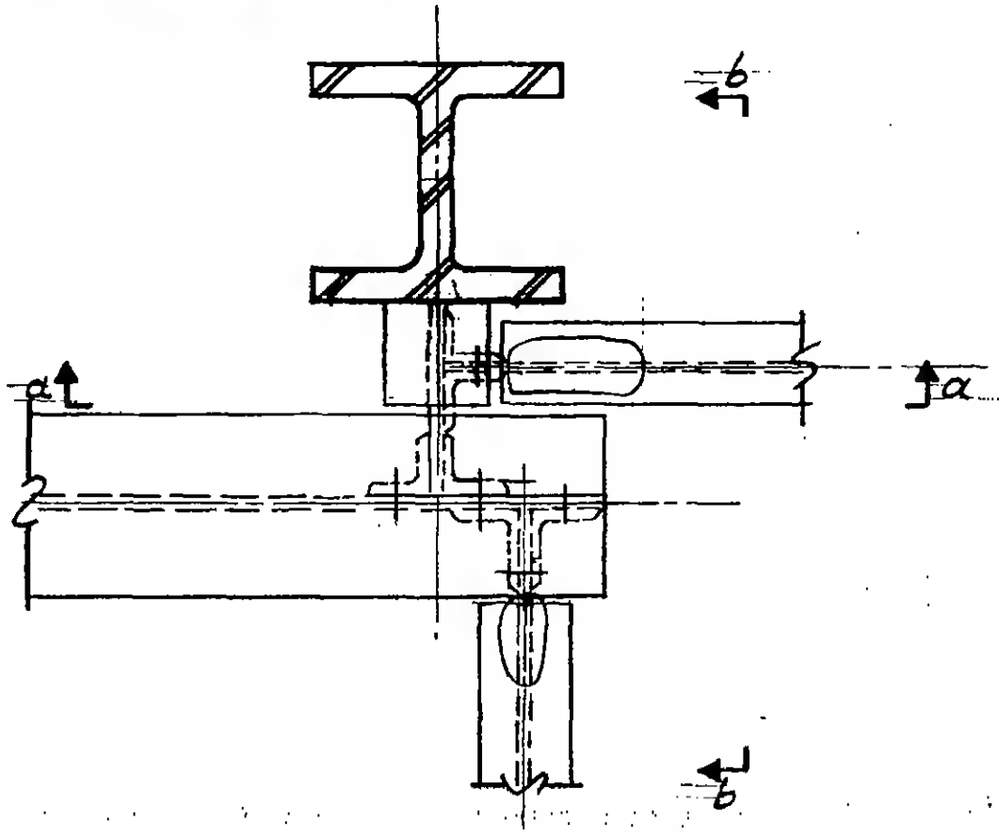

PLAN

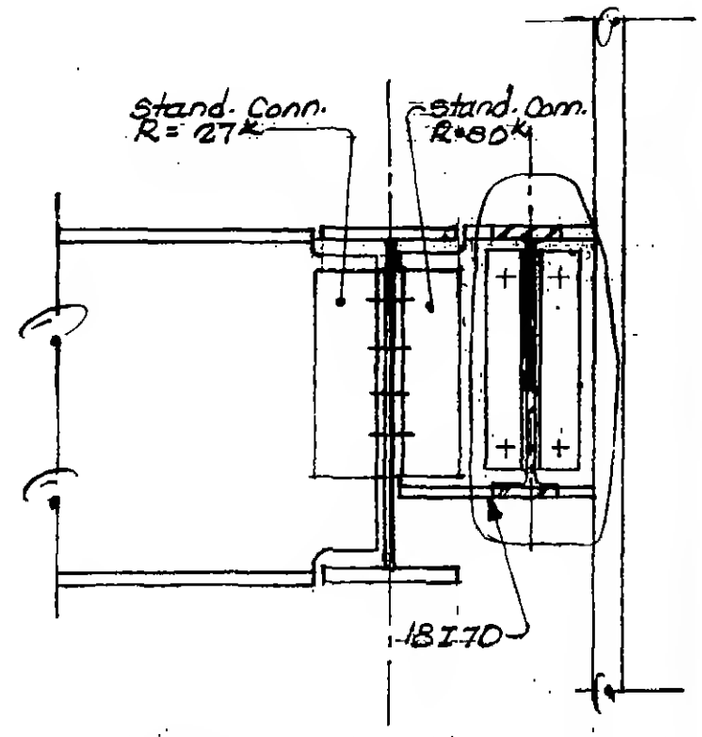

Section b-b

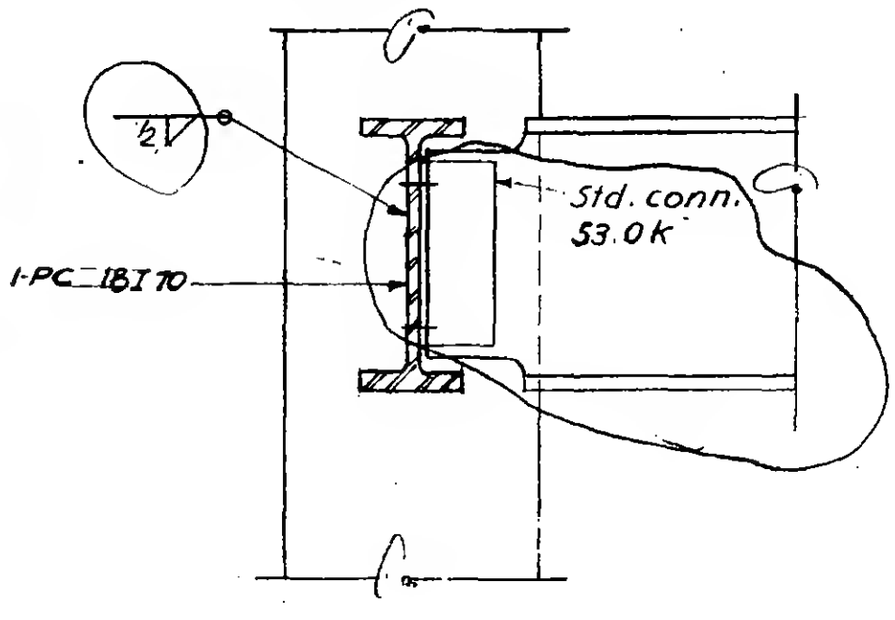

Section a-a

LICENSED PROFESSIONAL ENGINEER
LESLIE E. ROBERTSON
No. 34360
UNIVERSITY OF THE STATE OF NEW YORK

6-AB1-88

WORTHINGTON, SKILLING, HELLE & JACKSON — Civil & Structural Engineers

PROJECT: THE WORLD TRADE CENTER | TITLE: CONNECTION DETAIL 282 A, B, C, D | DATE: 5-1-67

REVISIONS
5-9-67
7-28-67
8-5-67
11-14-67
12-7-67

Note: Use Alt. detail for all location except where shop drawings are approved prior to 12-15-67

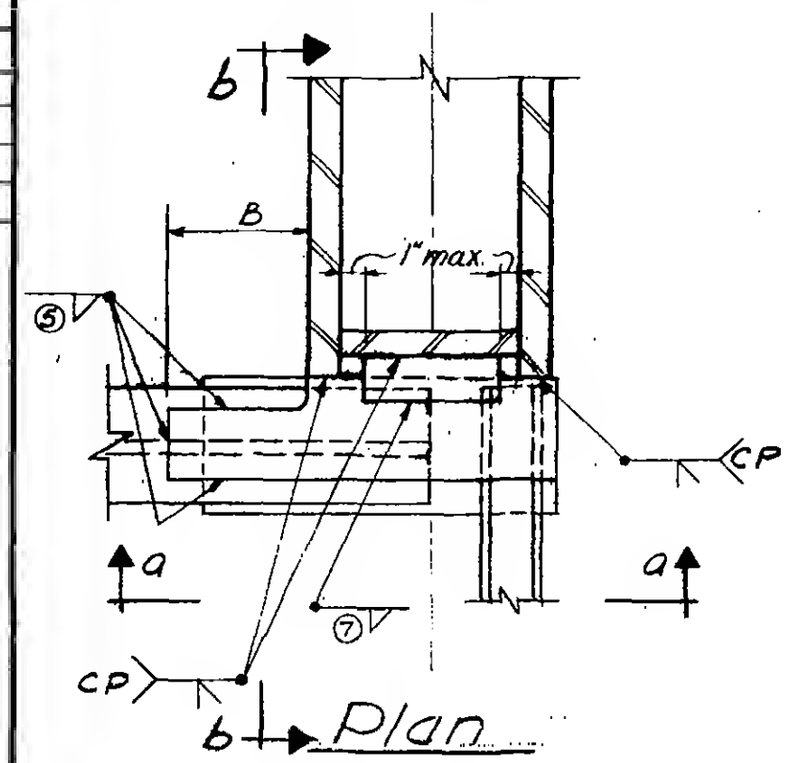

Plan

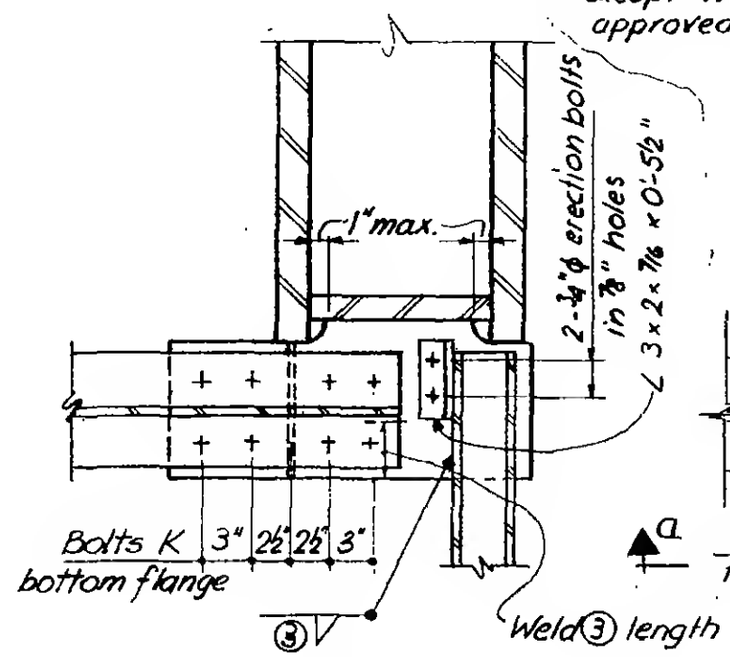

Plan

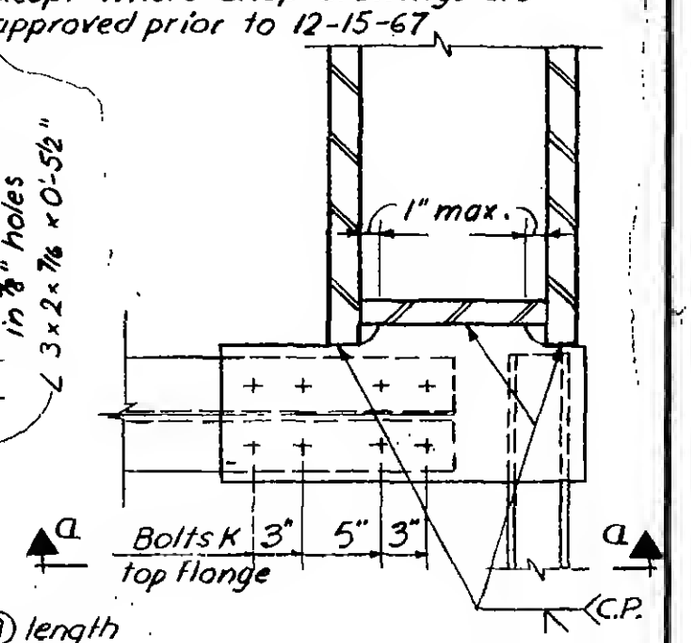

Plan Alt.

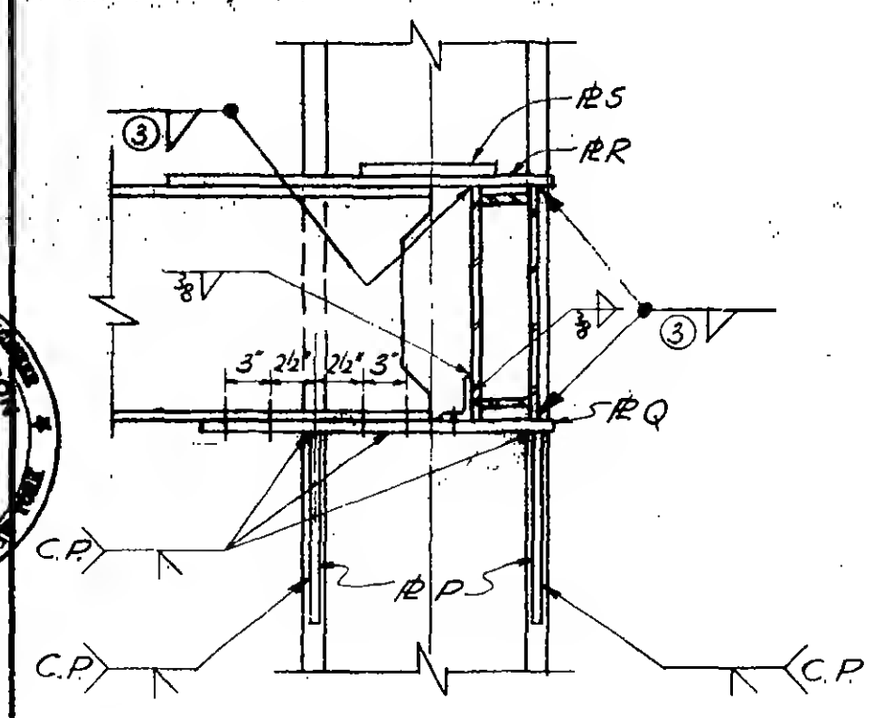

Section a-a

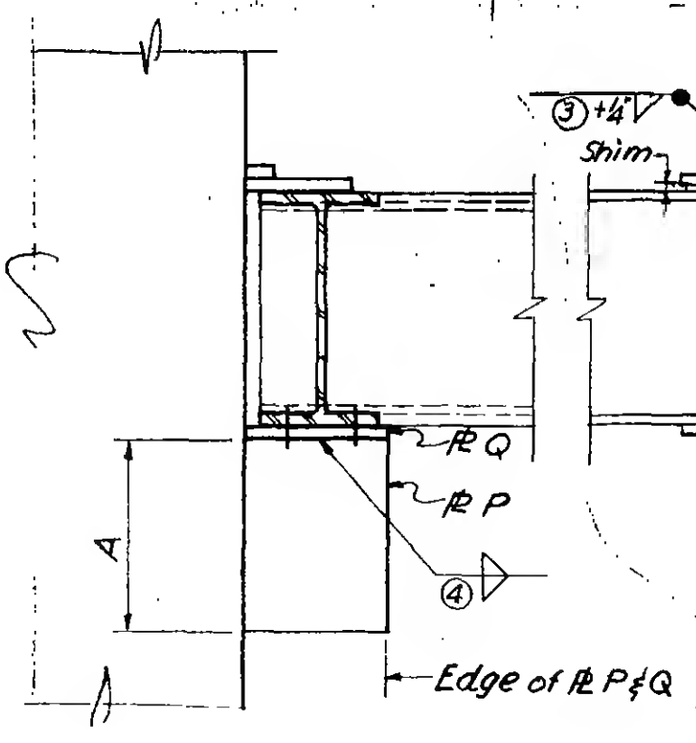

Section b-b

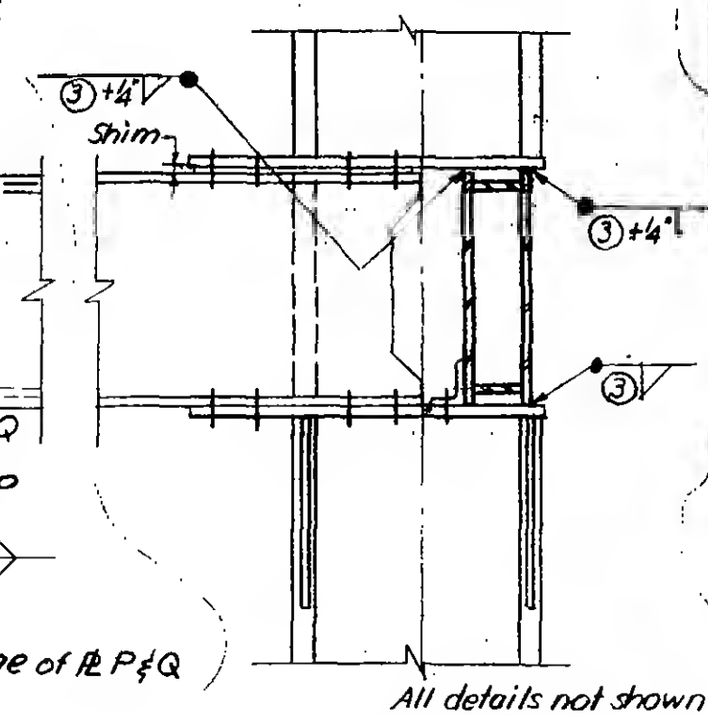

All details not shown see section a-a.

Section a-a Alt.

6-AB1-89

LICENSED PROFESSIONAL ENGINEER LESLIE E. ROBERTSON No. 34360 REGISTERED IN THE STATE OF NEW YORK

WORTHINGTON, SKILLING, HELLE & JACKSON — Civil & Structural Engineers

PROJECT: THE WORLD TRADE CENTER | TITLE: SCHEDULE FOR DETAIL 282 A, B, C, D | DATE: 7-28-68

REVISIONS

-5-67

	282 A	282 B	282 C, D			
PLATES						
P	7/16"	5/8"	5/8"			
Q	3/4"	7/8"	3/4"			
R	3/4"	7/8"	3/4"			
S	3" x 3/4"	3" x 7/8"	3/4"			
DIMENSIONS						
A	1'-3"	1'-3"	1'-3"			
B	0'-6"	0'-9"	0'-9"			
BOLTS						
K	8-1" φ	8-1 1/8" φ	8-1" φ			
WELDS						
③	9/16	9/16	1/2			
④	5/16	5/16	5/16			
⑤	1/2	5/8	1/2			
⑦	5/8	3/4	5/8			

LICENSED PROFESSIONAL ENGINEER
LESLIE E. ROBERTSON
No. 34360
UNIVERSITY OF THE STATE OF NEW YORK

6-AB1-89.1

WORTHINGTON, SKILLING, HELLE & JACKSON — Civil & Structural Engineers

PROJECT: THE WORLD TRADE CENTER | TITLE: CONNECTION DETAIL 283 A,B,S,T,Y,Z | DATE: 5-1-67

REVISIONS

7-5-67
9-15-67
2-9-68

6-AB1-90.5 for schedule 283 A,B
6-AB1-90.9 for schedule 283 S,T,Y
6-AB1-90.11 for schedule 283 Z

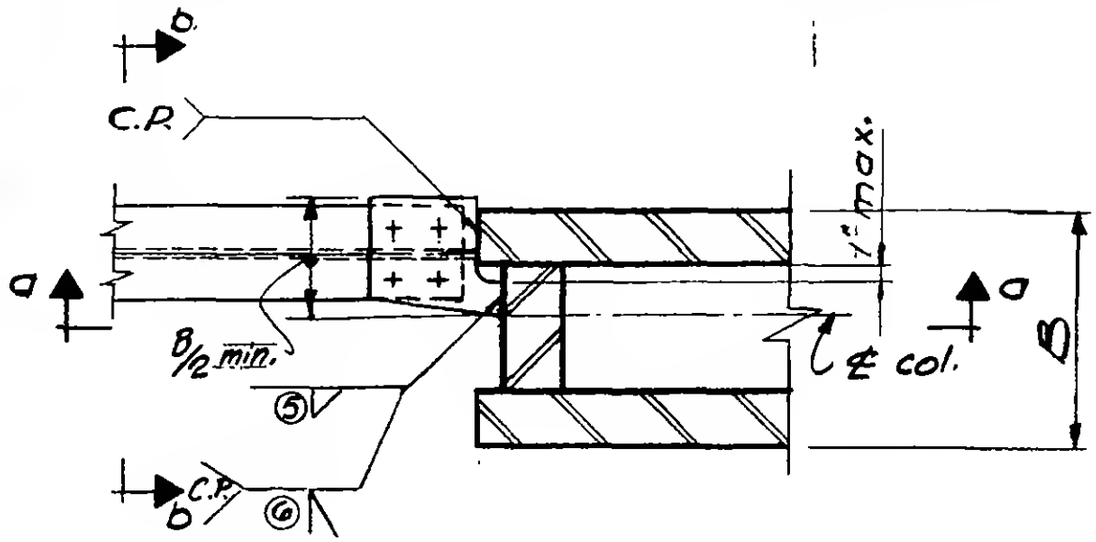

Plan

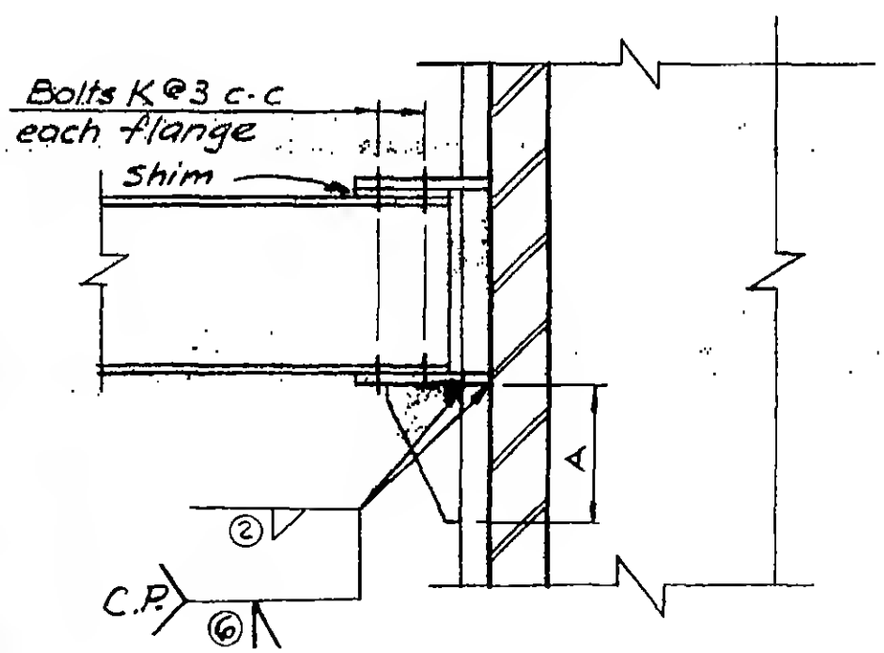

Section a-a

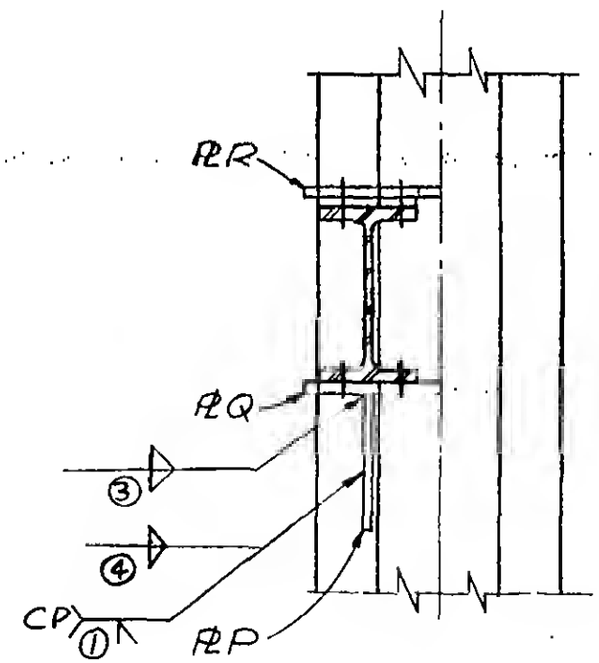

Section b-b

6-AB1-90

WORTHINGTON, SKILLING, HELLE & JACKSON — Civil & Structural Engineers

PROJECT: THE WORLD TRADE CENTER | TITLE: CONNECTION DETAIL 283 C ℄ L | DATE: 7-5-67

REVISIONS
7-28-67

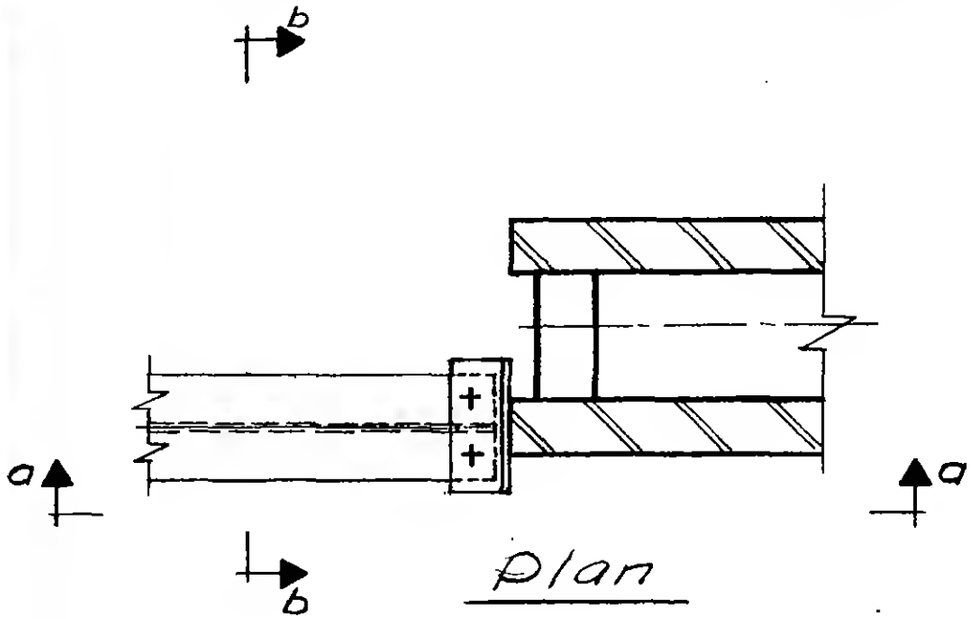

Plan

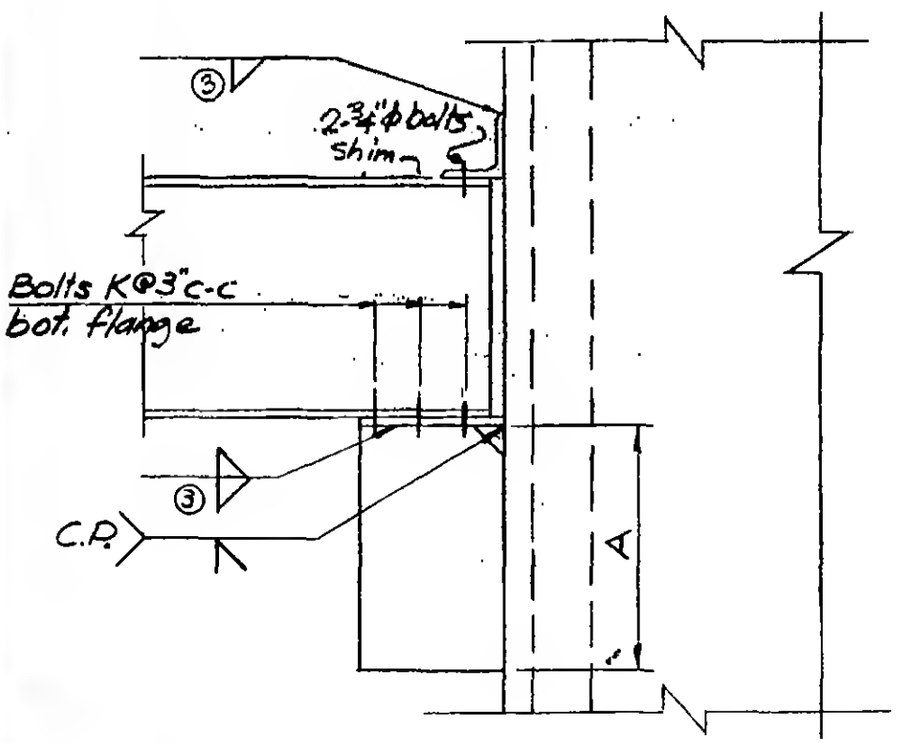

Section a-a

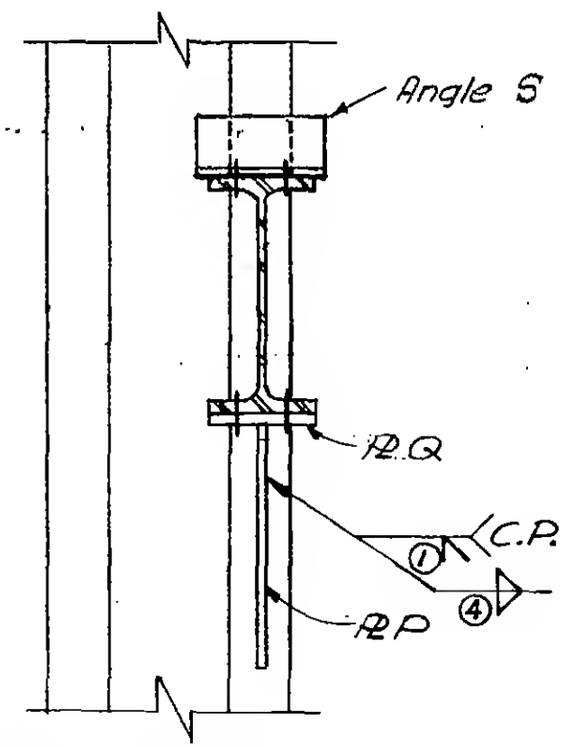

Section b-b

LICENSED PROFESSIONAL ENGINEER
LESLIE E. ROBERTSON
No. 34360
STATE OF NEW YORK

6-AB1-90.1

WORTHINGTON, SKILLING, HELLE & JACKSON — Civil & Structural Engineers

PROJECT: THE WORLD TRADE CENTER | TITLE: CONNECTION DETAIL 283 D&E | DATE: 7-5-67

REVISIONS

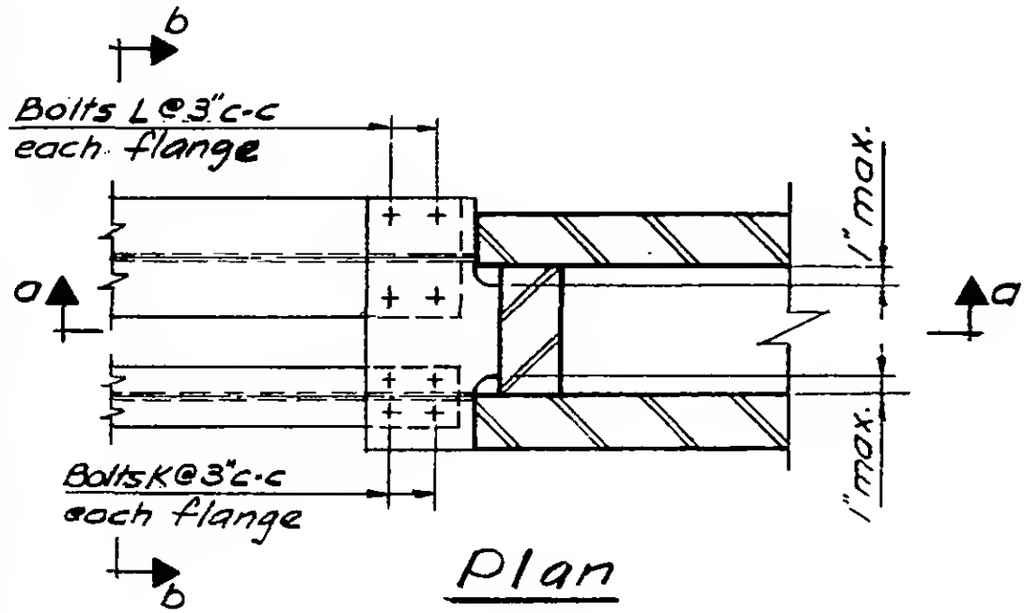

Plan

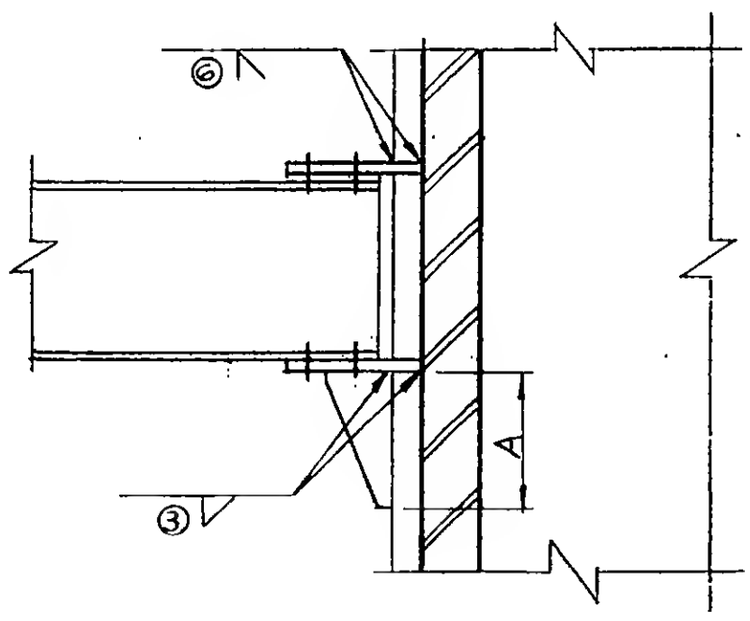

Section a-a

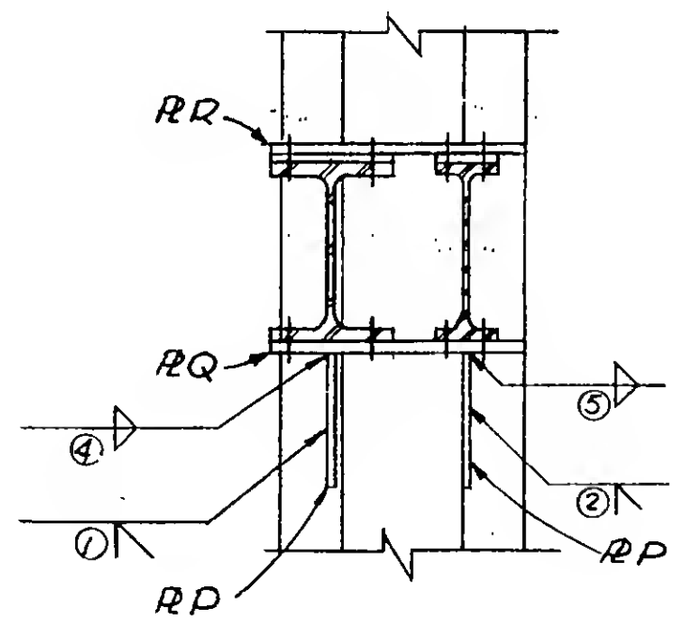

Section b-b

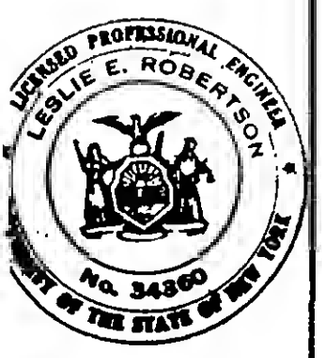

G-AB1-90.2

WORTHINGTON, SKILLING, HELLE & JACKSON — Civil & Structural Engineers

PROJECT: THE WORLD TRADE CENTER | TITLE: CONNECTION DETAIL 283 F | DATE: 7-5-67

REVISIONS

7-28-67

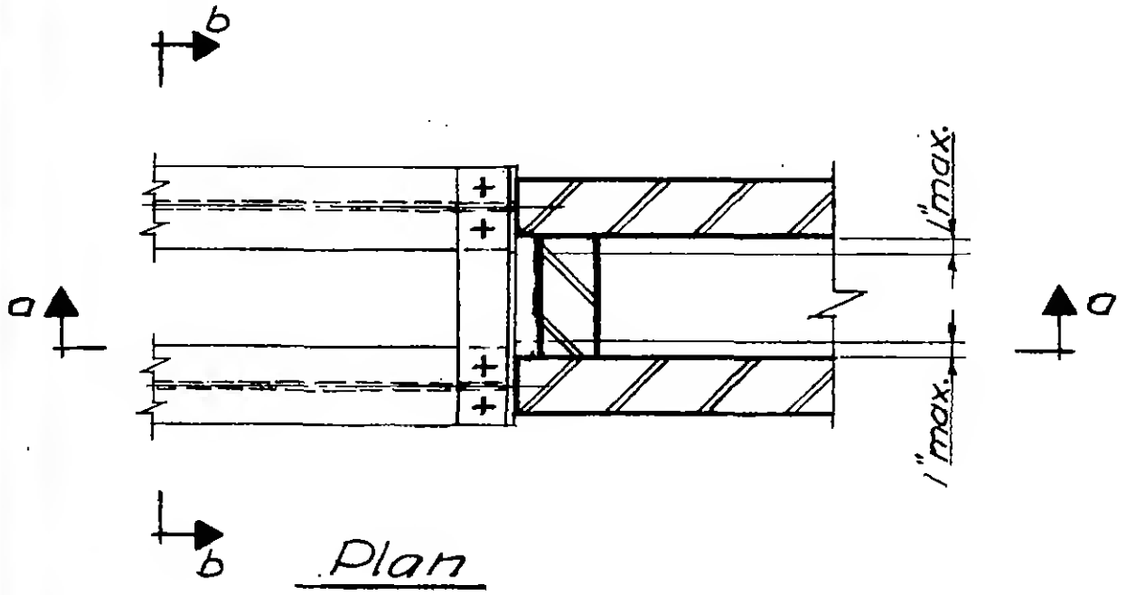

Plan

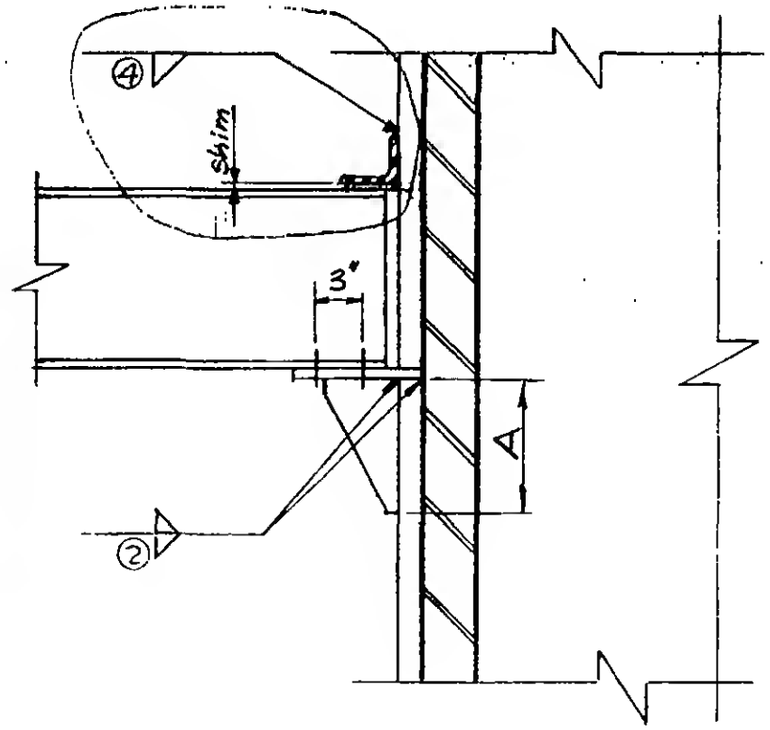

Section a-a

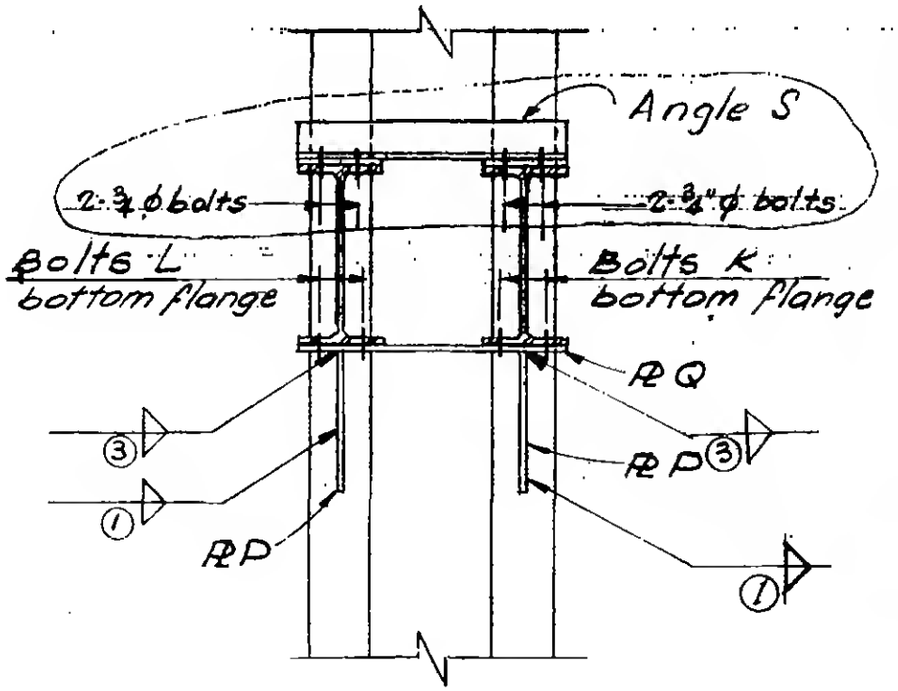

Section b-b

6-AB1-90.3

WORTHINGTON, SKILLING, HELLE & JACKSON — Civil & Structural Engineers

PROJECT: THE WORLD TRADE CENTER | TITLE: CONNECTION DETAIL 283 G, H & Q | DATE: 7-5-67

REVISIONS
7-28-67
9-15-67

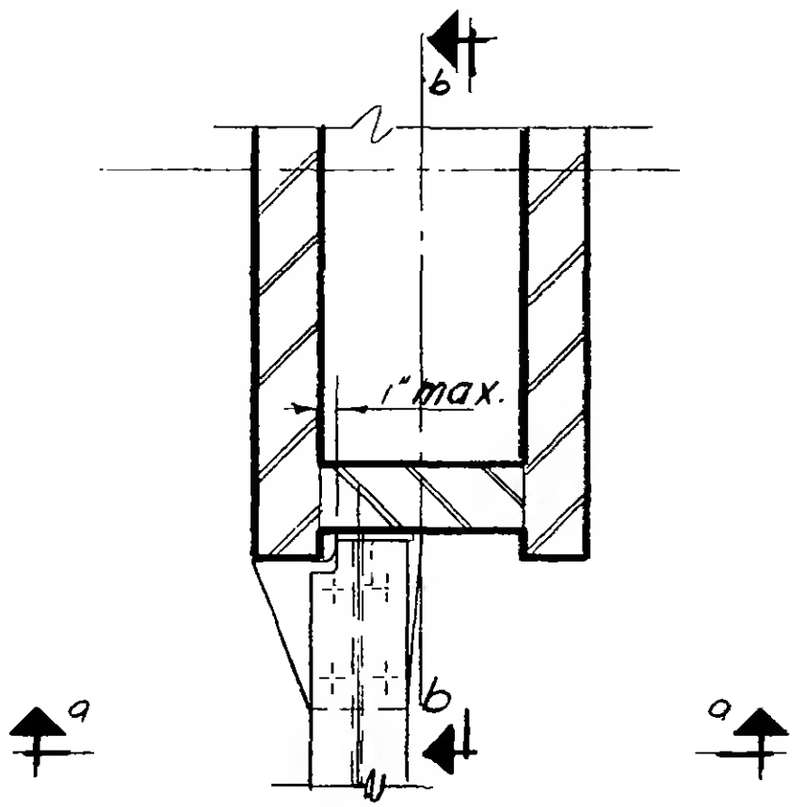

Plan
Detail 283 G&H

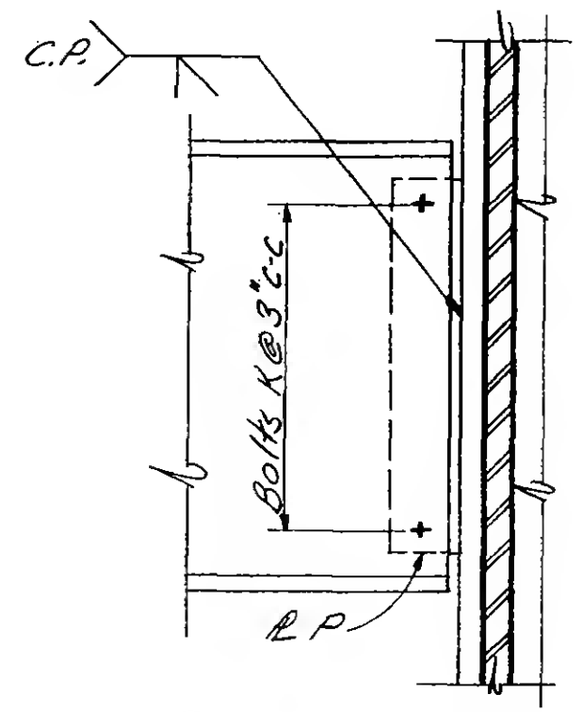

Section a-a

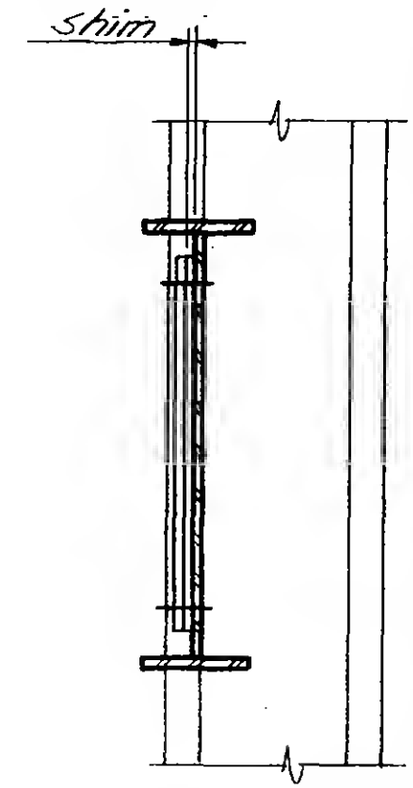

Section b-b

Detail 283Q

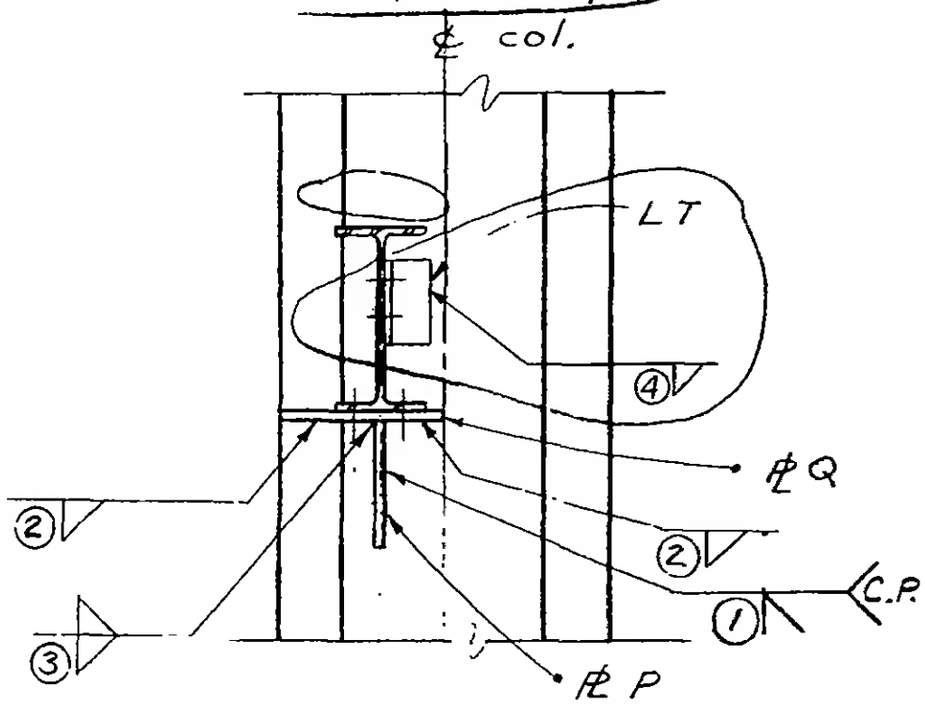

Section a-a

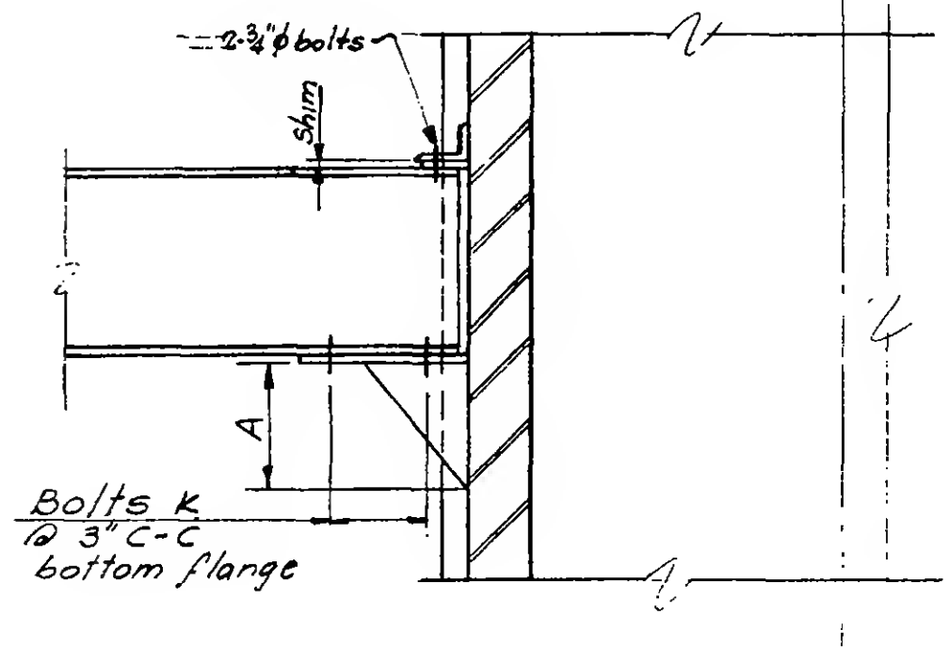

Section b-b

G-AB1-90.4

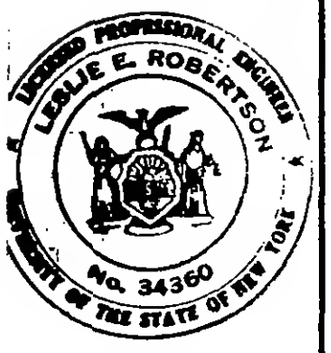

WORTHINGTON, SKILLING, HELLE & JACKSON — Civil & Structural Engineers

PROJECT: THE WORLD TRADE CENTER | TITLE: SCHEDULE FOR DETAIL 283 A-H | DATE: 7-5-67

REVISIONS
1-28-67

REF. DWGS.	G-AB1-90	G-AB1-90	G-AB1-90.1	G-AB1-90.2	G-AB1-90.3	G-AB1-90.4
	283 A	283 B	283C	283 D & E	283 F	283G & H
PLATES						
P	5" × 7/16"	7" × 7/16"	11" × 3/4"	4 1/2" × 7/16"	5" × 7/16"	5" × 7/16"
Q	7/16"	7/16"	11" × 3/4"	1/2"	11/16"	3/4"
R	7/16"	7/16"	—	1/2"	—	—
DIMENSIONS						
A	0'-9"	1'-6"	1'-4 1/2"	1'-0"	0'-9"	0'-9"
BOLTS						
K	4-3/4 φ (A325)	4-3/4 φ (A325)	6-1 1/8" φ (A325)	4-3/4" φ (A325)	4-3/4" φ (A325)	4-3/4 φ (A325)
L			—	4-1" φ (A325)	4-3/4 φ (A325)	—
WELDS						
①	C.P.	C.P.	C.P.	C.P.	7/16	C.P.
②	7/16	7/16	—	C.P.	1/2	7/16
③	5/16	5/16	5/16	1/2	5/16	5/16
④	—	—	1/4	5/16	1/4	1/4
⑤	7/16	7/16	—	5/16	—	—
⑥	—	—	—	C.P.	—	—
ANGLES						
S	—	—	4" × 3 1/2" × 5/16" × 0'-5 1/2"	—	4" × 3 1/2" × 5/16"	4" × 3 1/2" × 5/16" × 0'-5 1/2"

LICENSED PROFESSIONAL ENGINEER
LESLIE E. ROBERTSON
No. 34360
CITY OF THE STATE OF NEW YORK

6-AB1-90.5

WORTHINGTON, SKILLING, HELLE & JACKSON — Civil & Structural Engineers

PROJECT: THE WORLD TRADE CENTER | TITLE: CONNECTION DETAIL 283 I, J, K, M & N | DATE: 7-5-67

REVISIONS
7-28-67
8-5-67
5-6-68

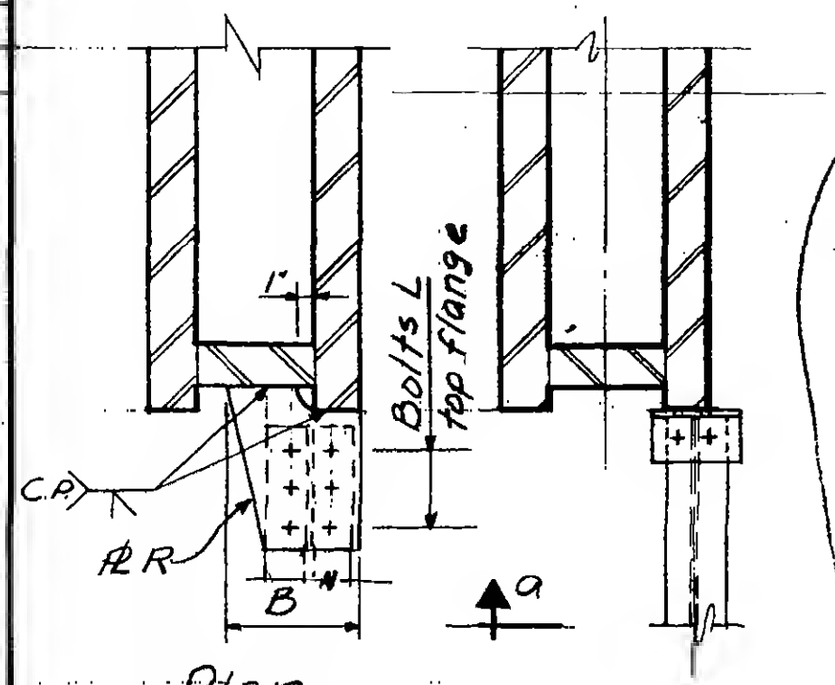

Plan
DETAIL 283 M&N
Bottom flange conn. same as Detail 283I

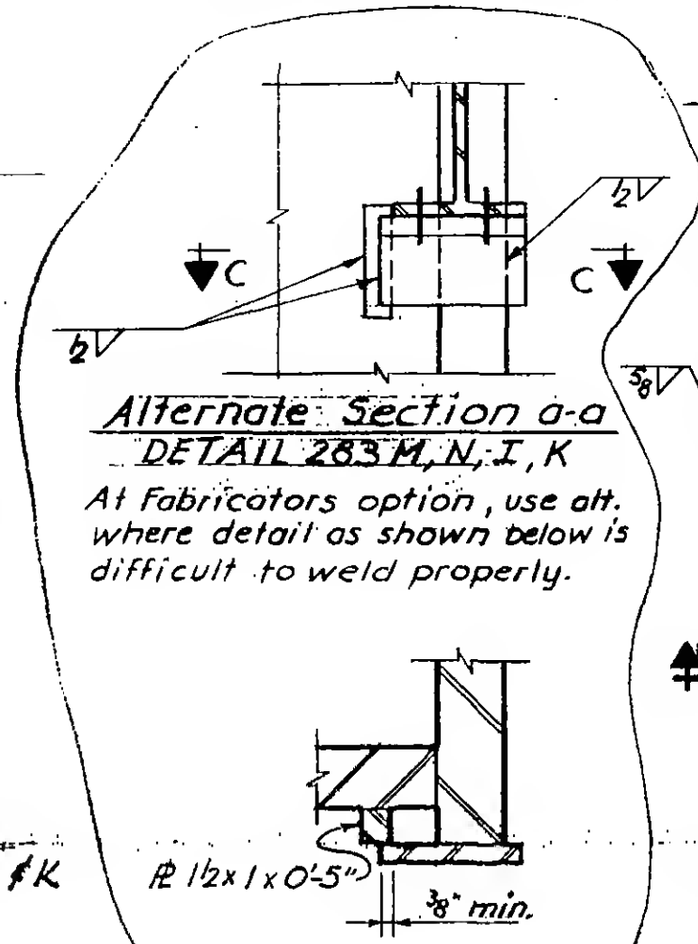

Alternate Section a-a
DETAIL 283 M, N, I, K
At Fabricators option, use alt. where detail as shown below is difficult to weld properly.

Section c-c

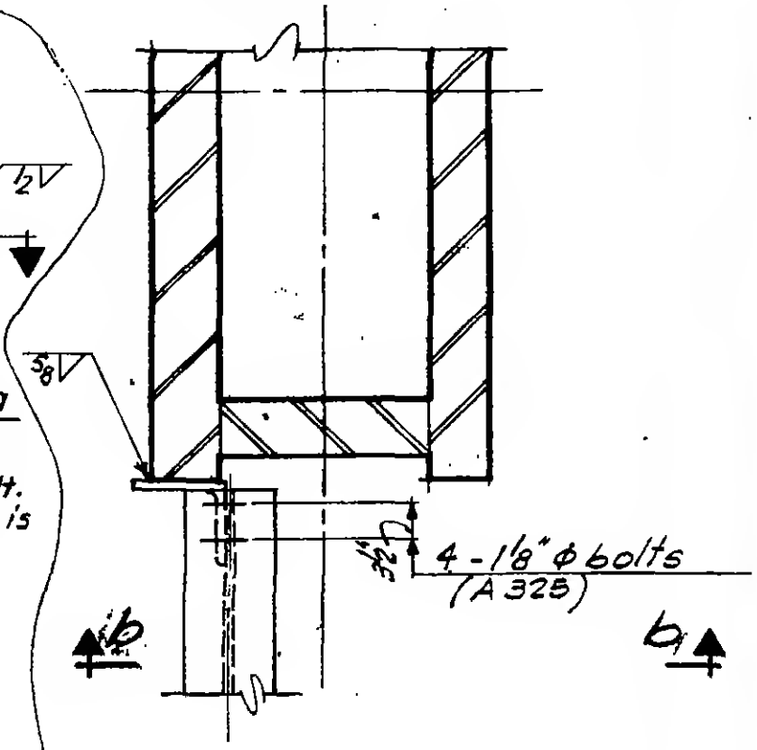

Plan
DETAIL 283 I & K

Plan
DETAIL 283 J

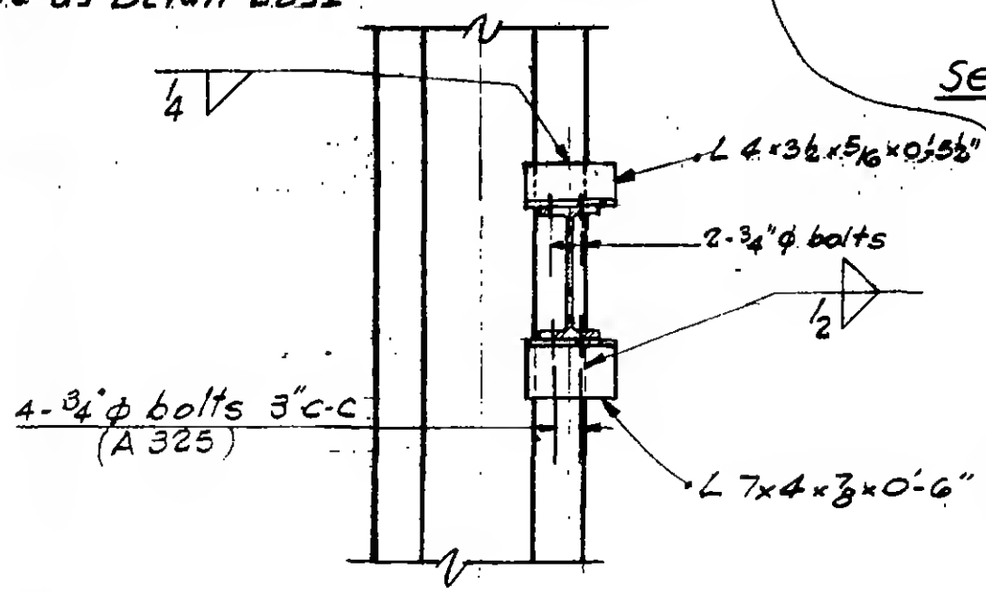

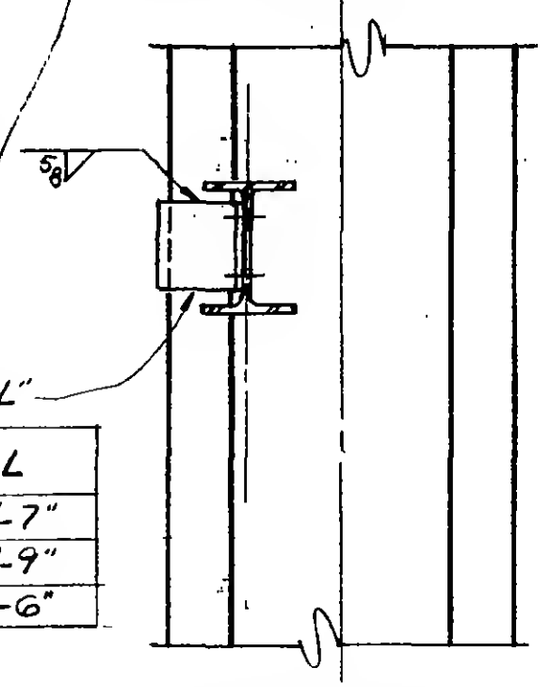

Beam size	L
10"	0'-7"
12"	0'-9"
8"	0'-6"

Section a-a

Section b-b

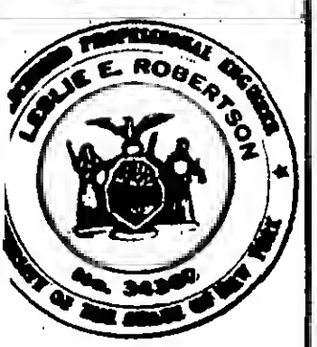

6-AB1-90.6

7

SKILLING - HELLE - CHRISTIANSEN - ROBERTSON Structural & Civil Engineers

PROJECT: THE WORLD TRADE CENTER | TITLE: SCHEDULE FOR DETAIL 283 L, M, N, P, Q & R | DATE: 7-28-67

REVISIONS
9-15-67
10-2-67

REF. DWG.	6-AB1-90.1	6-AB1-90.6	6-AB1-90.6	6-AB1-90.8	6-AB1-90.4	6-AB1-90.8
	283L	283M	283N	283 P	283 Q	283 R
PLATES						
P	6½"x 9/16"	—	—	5/8"	½"	3/8"
Q	9/16"	—	—	—	—	—
R	—	¾"	⅞"	—	—	—
DIMENSIONS						
A	1'-0"	—	—	—	—	—
B	—	0'-7"	0'-9"	—	—	—
BOLTS						
K	4-¾"φ	—	—	8-1"φ	8-¾"	3-1"φ
L	—	6-⅞"φ	6-1"φ	—	—	—
WELDS						
1	—	—	—	—	—	—
2	—	—	—	—	—	—
3	5/16	—	—	—	—	—
4	½	—	—	—	—	—
ANGLES						
5	4x3½x5/16x0'-5½"	—	—	—	—	—

6-AB1-90.7

SKILLING - HELLE - CHRISTIANSEN - ROBERTSON Structural & Civil Engineers

PROJECT THE WORLD TRADE CENTER | TITLE CONNECTION DETAIL 283 P, R (U & V) | DATE 9-15-67

REVISIONS

10-2-67

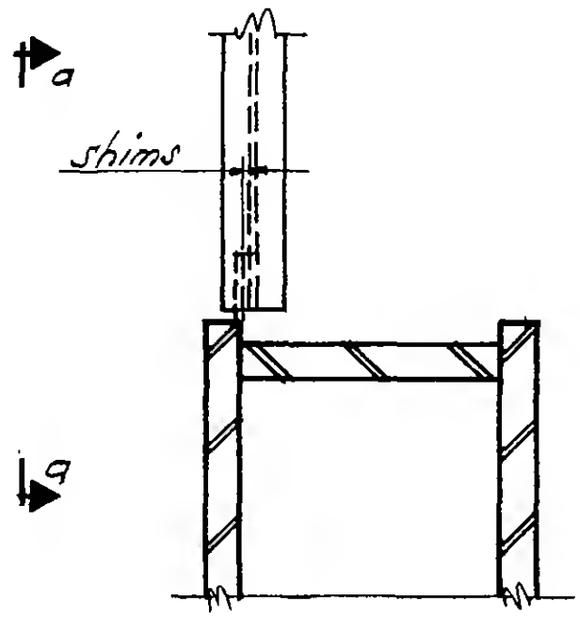

Plan

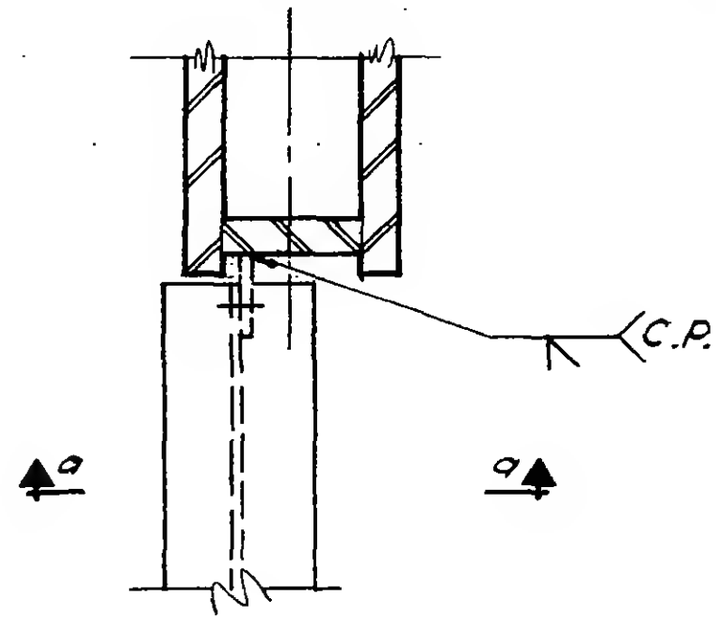

Plan

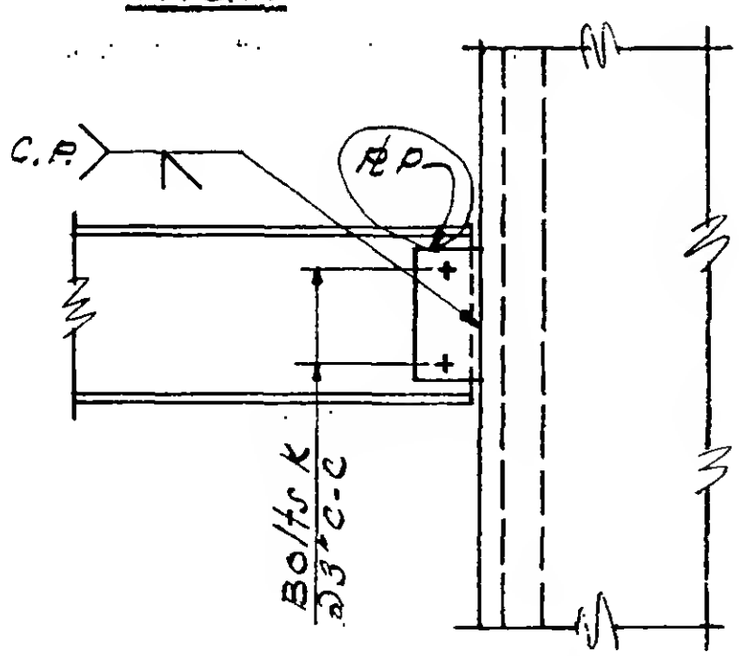

Section a-a

DETAIL 283 R & V

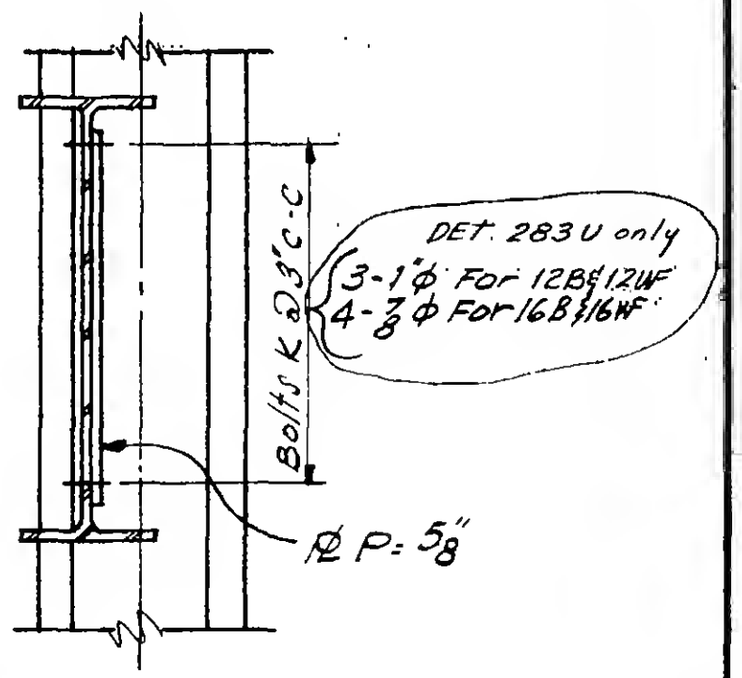

Section a-a

DETAIL 283 P & U

LICENSED PROFESSIONAL ENGINEER
LESLIE E. ROBERTSON
No. 34360
UNIVERSITY OF THE STATE OF NEW YORK

G-AB1-90.8

SKILLING - HELLE - CHRISTIANSEN - ROBERTSON Structural & Civil Engineers

PROJECT: THE WORLD TRADE CENTER | TITLE: SCHEDULE FOR DETAIL 283 S, T, U, V, W, Y | DATE: 9-15-67

REVISIONS
10-2-67
2-9-68

REF. DWG.	6-AB1-90	6-AB1-90	6-AB1-90.8	6-AB1-90.8	6-AB1-90.	6-AB1-90
	283 S	283 T	283 U	283 V	283 W	283 Y
PLATES						
P	6" x 1/2"	7" x 7/8"	3/8"	1/2"	5/8"	5" x 7/16"
Q	1/2"	7/8"	—	—	—	1/2
R	1/2"	5/8"	—	—	—	1/2
DIMENSION						
A	0'-10"	1'-5"	—	—	10"	0'-9"
B	1'-4"	1'-4"	—	—	—	—
BOLTS						
K	6-7/8"φ	8-7/8"φ	see DWG.	5-1"φ bolts	4-1"φ A325	8-3/4"φ
WELDS						
①	C.P.	C.P.	—	—	—	C.P.
②	—	—	—	—	—	—
③	5/16	5/16	—	—	—	5/16
④	—	—	—	—	—	—
⑤	—	—	—	—	—	—
⑥	C.P.	C.P.	—	—	—	C.P.

6-AB1-90.9

SKILLING - HELLE - CHRISTIANSEN - ROBERTSON Structural & Civil Engineers

PROJECT THE WORLD TRADE CENTER | TITLE CONNECTION DETAIL 283 W, X | DATE 10-2-67

REVISIONS

12-21-67

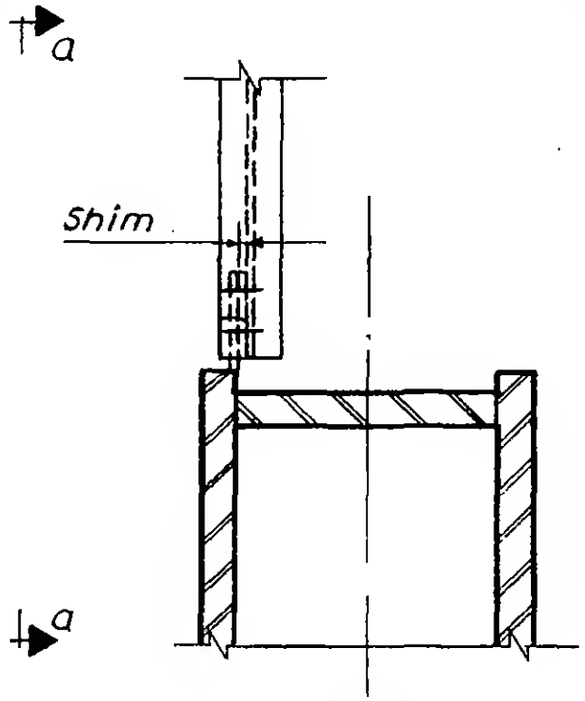

Plan

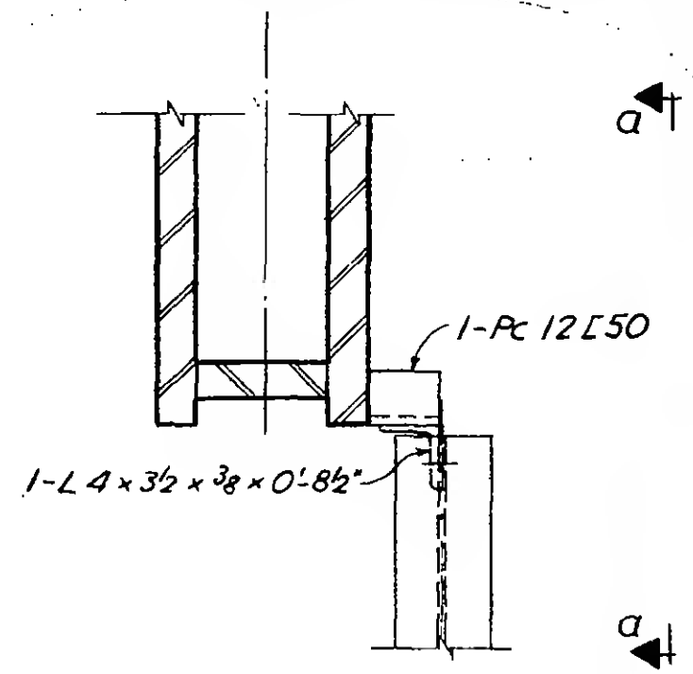

Plan

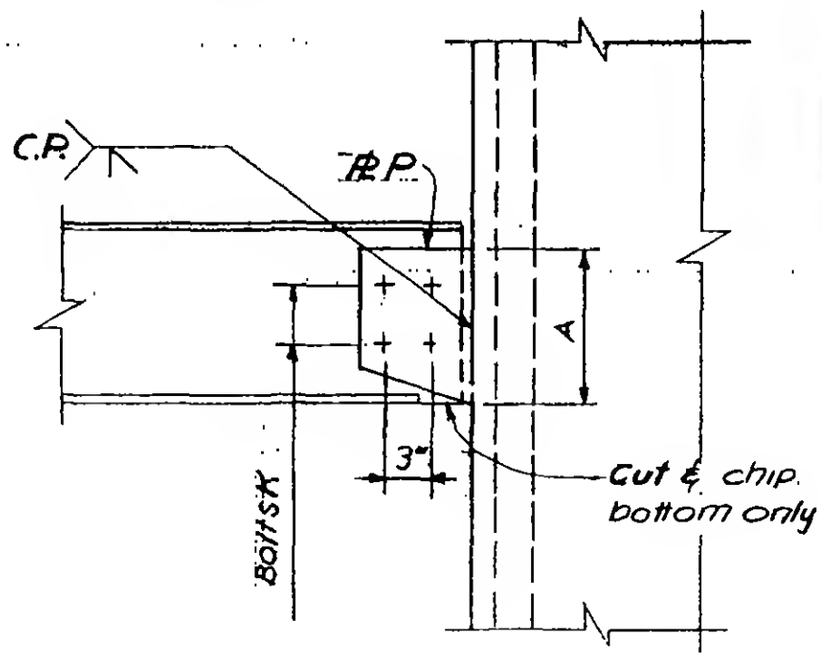

Section a-a

Detail 283 W

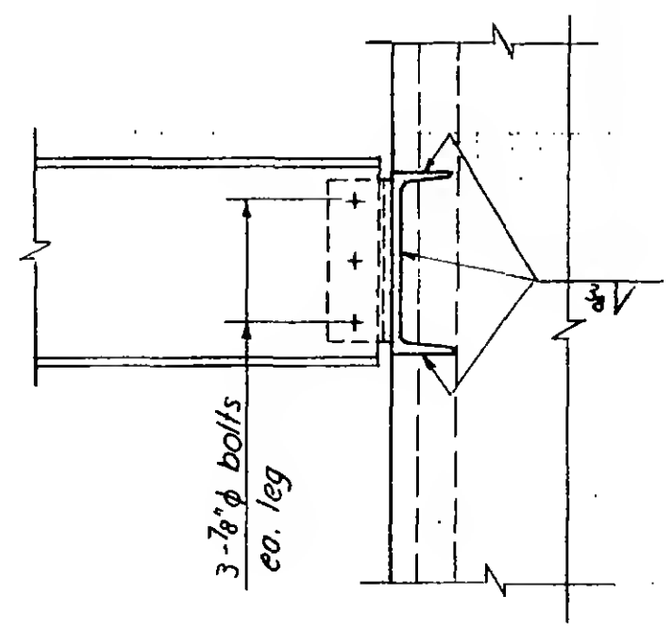

Detail 283 X

6-ABI-90.10

LICENSED PROFESSIONAL ENGINEER
LESLIE E. ROBERTSON
No. 34360
UNIVERSITY OF THE STATE OF NEW YORK

SKILLING - HELLE - CHRISTIANSEN - ROBERTSON Structural & Civil Engineers

PROJECT: THE WORLD TRADE CENTER | TITLE: SCHEDULE FOR DETAIL 283 Z | DATE: 2-9-68

REVISIONS

REF. DWGS.	6-AB1-90
	283 Z
PLATES	
P	7" × 7/8"
Q	7/8"
R	1/2
DIMENSION	
A	1'-2"
BOLTS	
K	4-3/4" ϕ
WELDS	
1	C.P.
2	—
3	5/16
4	—
5	—
6	C.P.

LICENSED PROFESSIONAL ENGINEER
LESLIE E. ROBERTSON
No. 34360
UNIVERSITY OF THE STATE OF NEW YORK

6-AB1-90.11

WORTHINGTON, SKILLING, HELLE & JACKSON — Civil & Structural Engineers

PROJECT: THE WORLD TRADE CENTER | TITLE: CONNECTION DETAIL 284 A | DATE: 6-5-67

REVISIONS
9-15-67
11-10-67

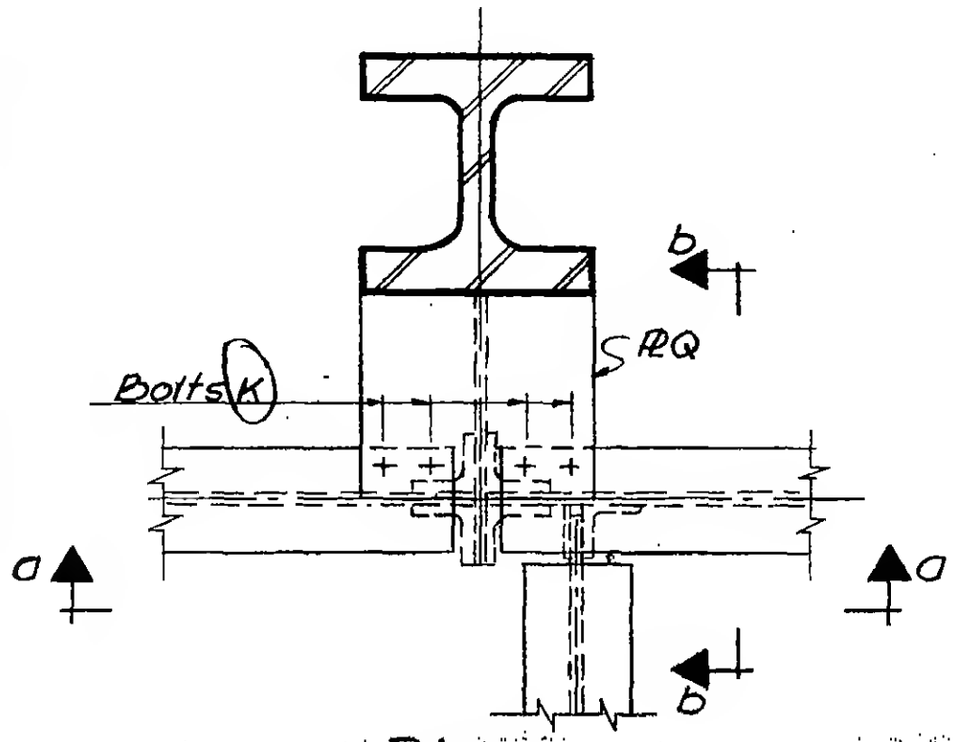

Plan

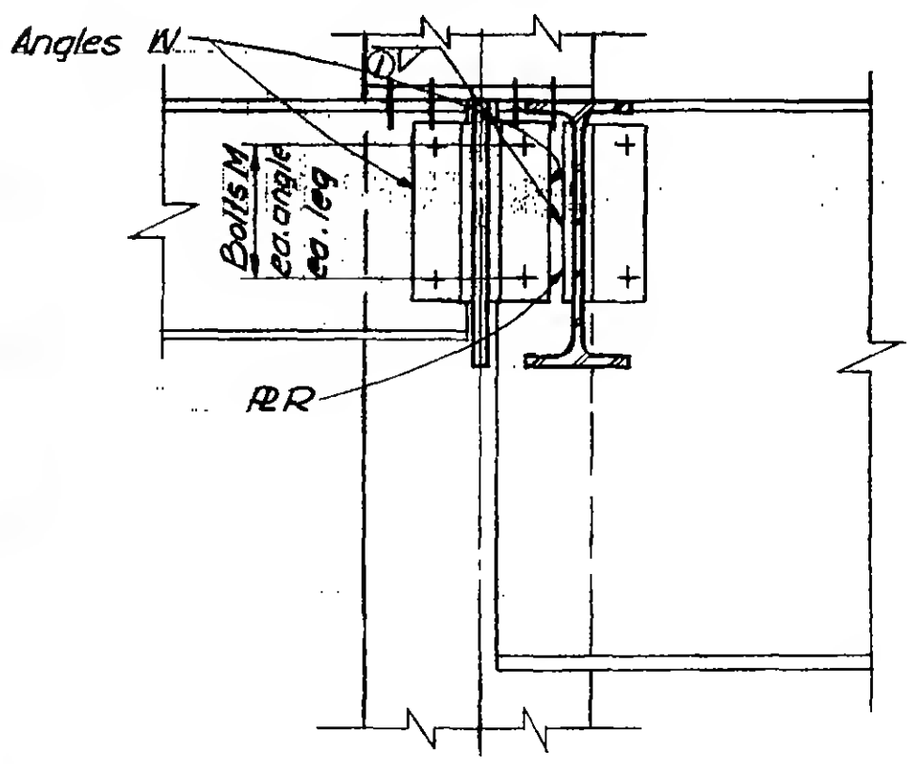

Section a-a

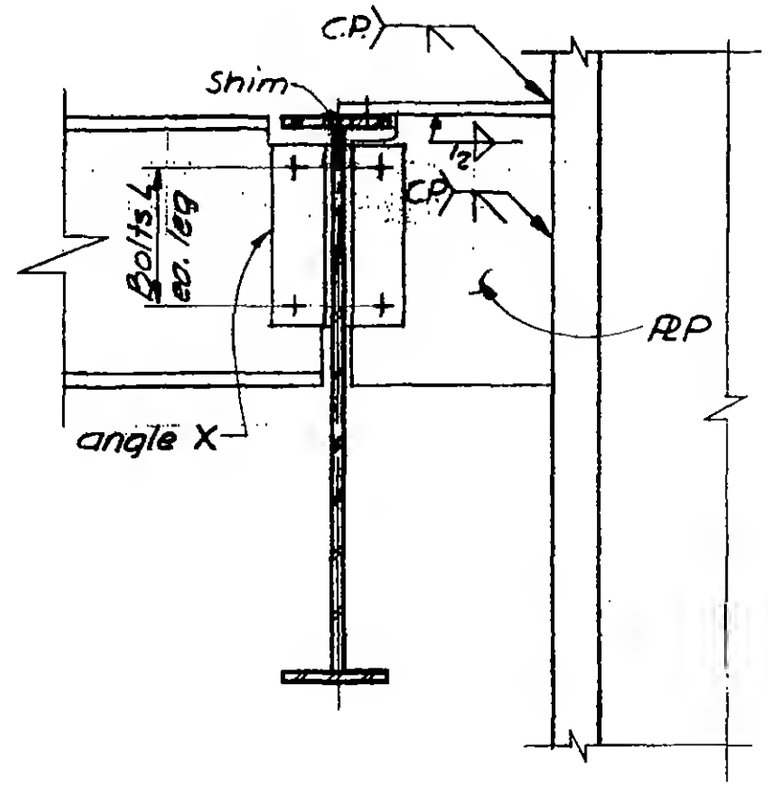

Section b-b

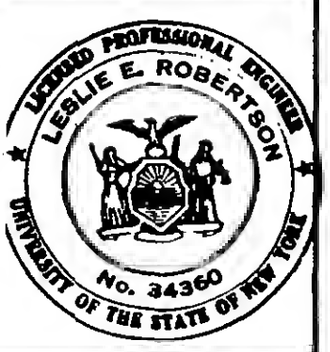

G-AB1-91

SKILLING - HELLE - CHRISTIANSEN - ROBERTSON Structural & Civil Engineers

PROJECT: THE WORLD TRADE CENTER TITLE: SCHEDULE FOR DETAIL 284A DATE: 9-15-67

REVISIONS
11-10-67

	284 A
PLATES	
P	1½"
Q	½"
R	⅜"
ANGLES	
W	4×3×⅜
X	4×3½×5/16
BOLTS	
K	4-¾"φ
L	4-¾"φ
M	4-⅞"φ
WELDS	
①	5/16

6-AB1-91.1

WORTHINGTON, SKILLING, HELLE & JACKSON — Civil & Structural Engineers

PROJECT: THE WORLD TRADE CENTER | TITLE: CONNECTION DETAIL 285 A | DATE: 5-22-67

REVISIONS
9-15-67
11-14-67

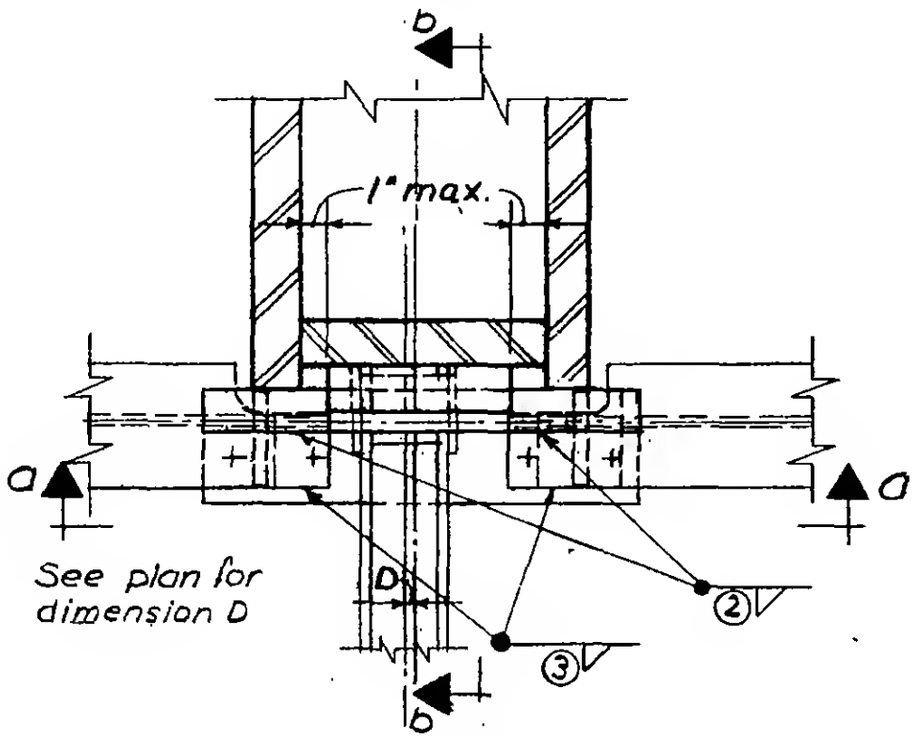

Plan

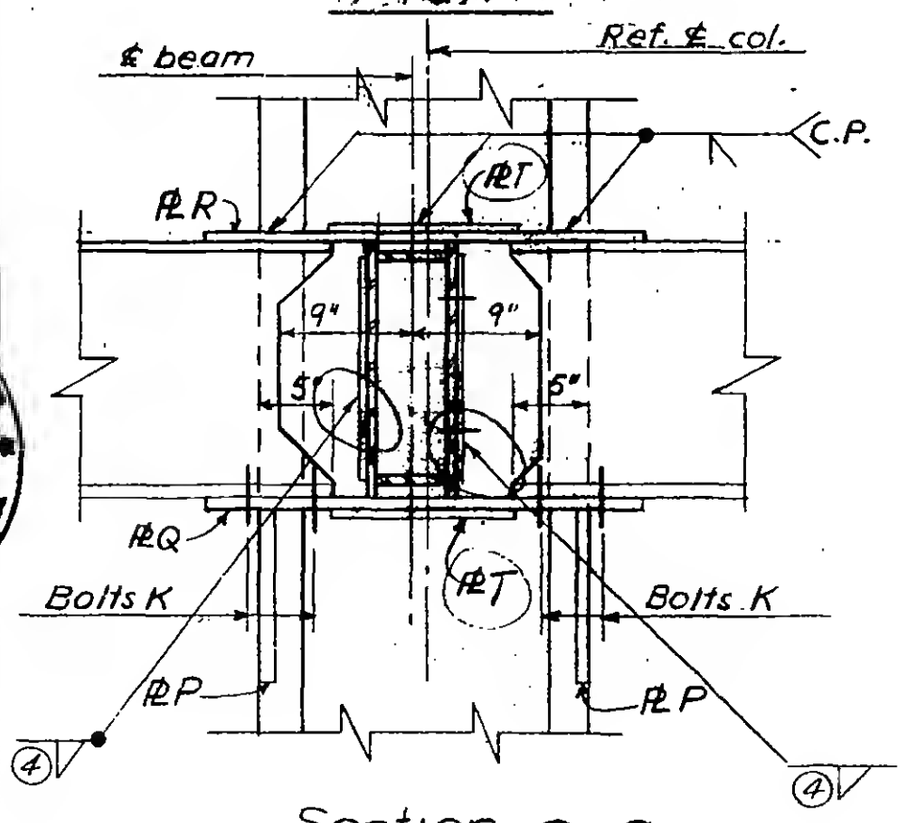

Section a-a

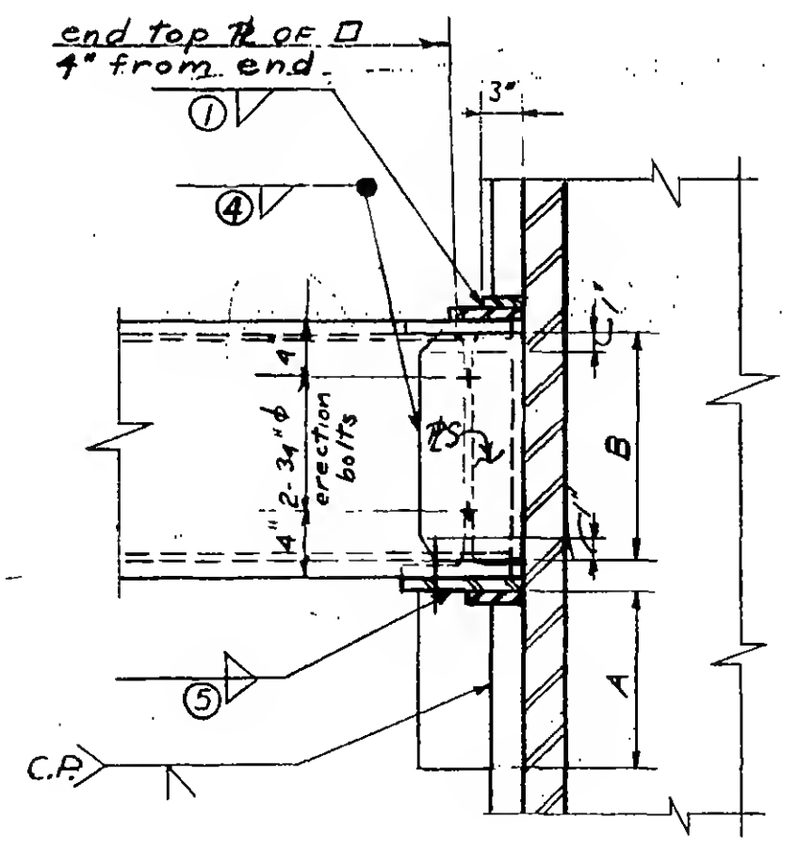

Section b-b

6-AB1-92

SKILLING - HELLE - CHRISTIANSEN - ROBERTSON Structural & Civil Engineers

PROJECT: THE WORLD TRADE CENTER | TITLE: SCHEDULE FOR DETAIL 285 A | DATE: 9-15-67

REVISIONS

11-14-67
12-21-67

	285 A
PLATES	
P	3/8"
Q	1/2"
R	1/2"
S	1/2"
T	1/2"
DIMENSIONS	
A	1'-0"
B	1'-2"
BOLTS	
K	2 - 3/4" ϕ
WELDS	
1	3/8
2	3/8
3	3/8
4	1/2
5	5/16

6-AB1-92.1

WORTHINGTON, SKILLING, HELLE & JACKSON — Civil & Structural Engineers

PROJECT: THE WORLD TRADE CENTER | TITLE: CONNECTION DETAIL 286 A | DATE: 5-22-67

REVISIONS
1-15-67
11-10-67

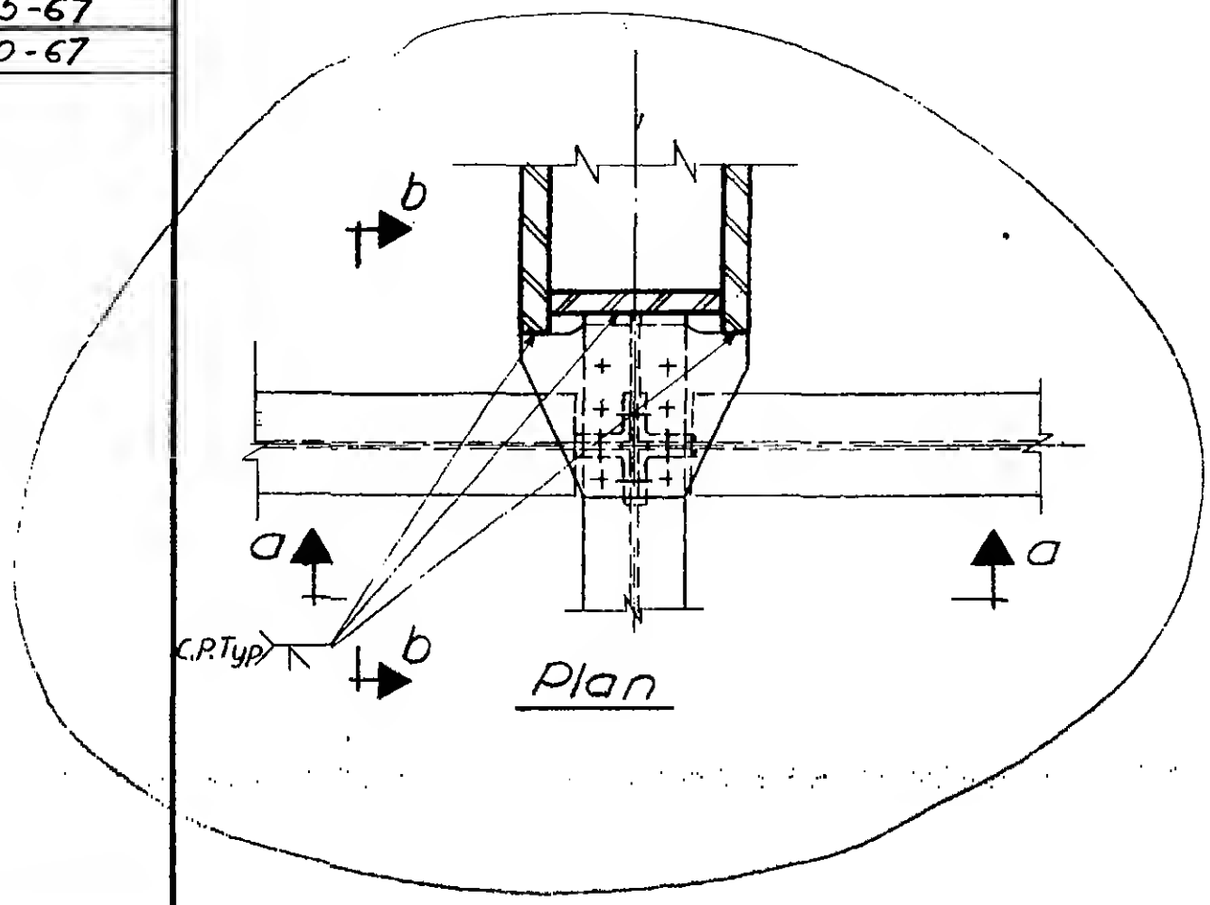

Plan

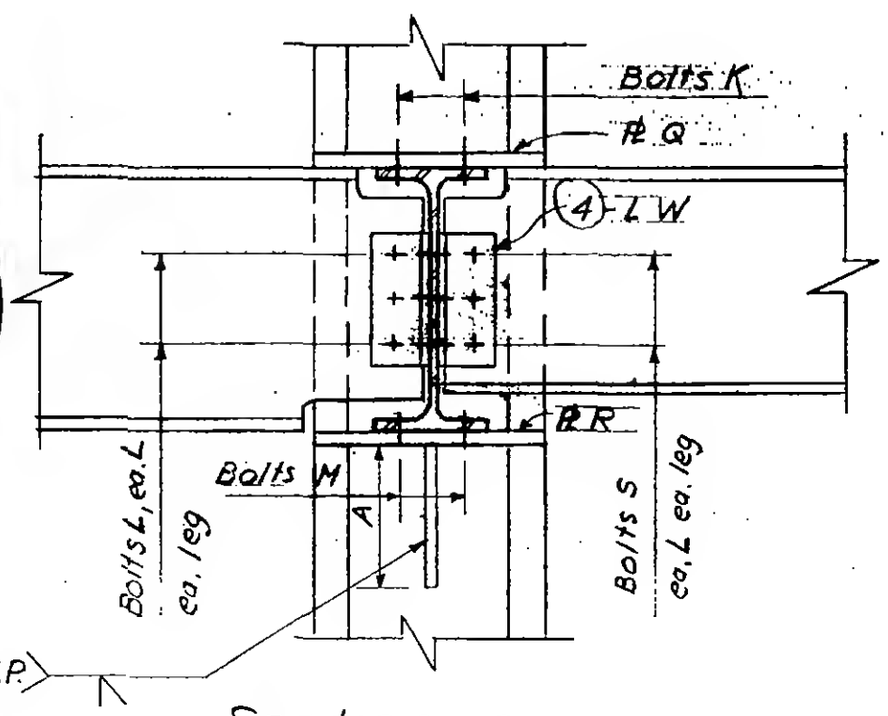

Section a-a

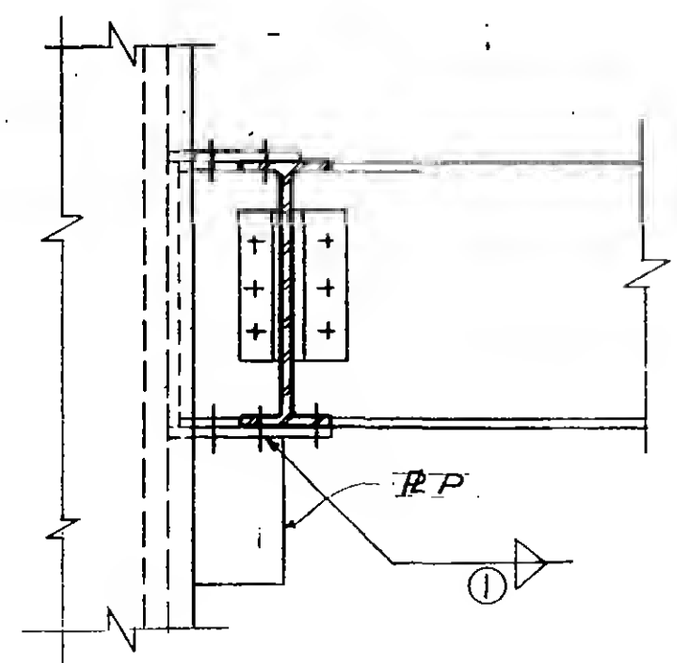

Section b-b

6-AB1-93

LICENSED PROFESSIONAL ENGINEER LESLIE E. ROBERTSON No. 34360 STATE OF NEW YORK

SKILLING - HELLE - CHRISTIANSEN - ROBERTSON Structural & Civil Engineers

PROJECT THE WORLD TRADE CENTER | TITLE SCHEDULE FOR DETAIL 286A, B | DATE 9-15-67

REVISIONS
10-2-67
11-10-67

	286A	286B
PLATES		
P	6" x 3/4"	10 x 1"
Q	1/2"	3/4"
R	7/8"	—
ANGLES		
W	4 x 3 1/2 x 5/16	—
X	4 x 4 x 5/16	—
BOLTS		
K	6 - 3/4" ϕ	6 - 7/8" ϕ
L	3 - 3/4" ϕ	2 - 7/8" ϕ
M	6 - 3/4" ϕ	—
DIMENSIONS		
A	1'-2"	1'-2"
WELDS		
1	5/16	5/16

LICENSED PROFESSIONAL ENGINEER
LESLIE E. ROBERTSON
No. 34360
UNIVERSITY OF THE STATE OF NEW YORK

6-AB1-93.1

SKILLING - HELLE - CHRISTIANSEN - ROBERTSON Structural & Civil Engineers

PROJECT THE WORLD TRADE CENTER | TITLE CONNECTION DETAIL 286 B | DATE 10-2-67

REVISIONS

12-21-67

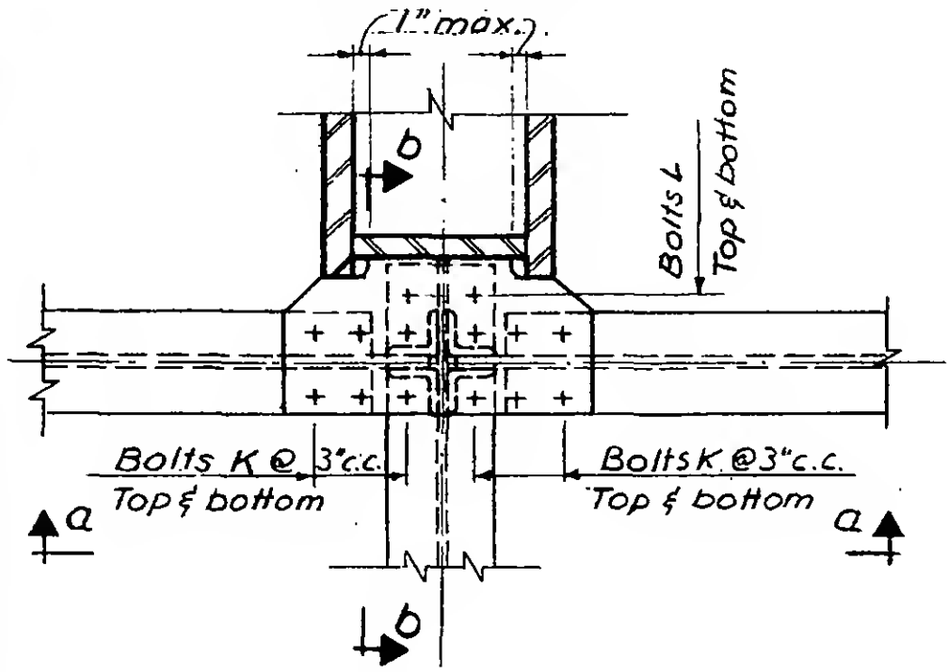

Plan

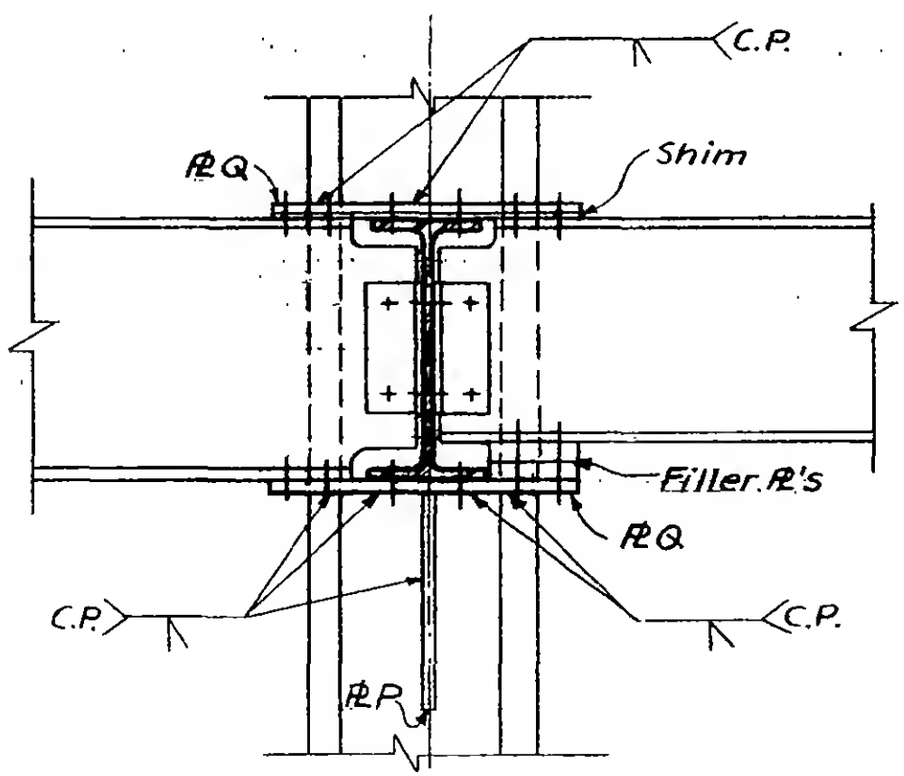

Section a-a

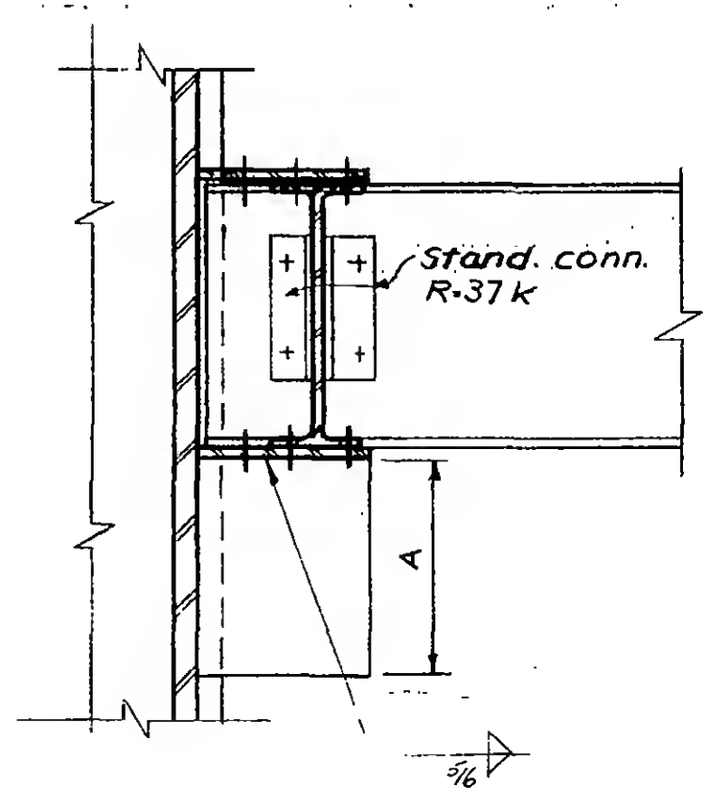

Section b-b

6-AB1-93.2

WORTHINGTON, SKILLING, HELLE & JACKSON — Civil & Structural Engineers

PROJECT: THE WORLD TRADE CENTER | TITLE: CONNECTION DETAIL 287 A&B | DATE: 5-9-67

REVISIONS

6-30-67
7-28-67

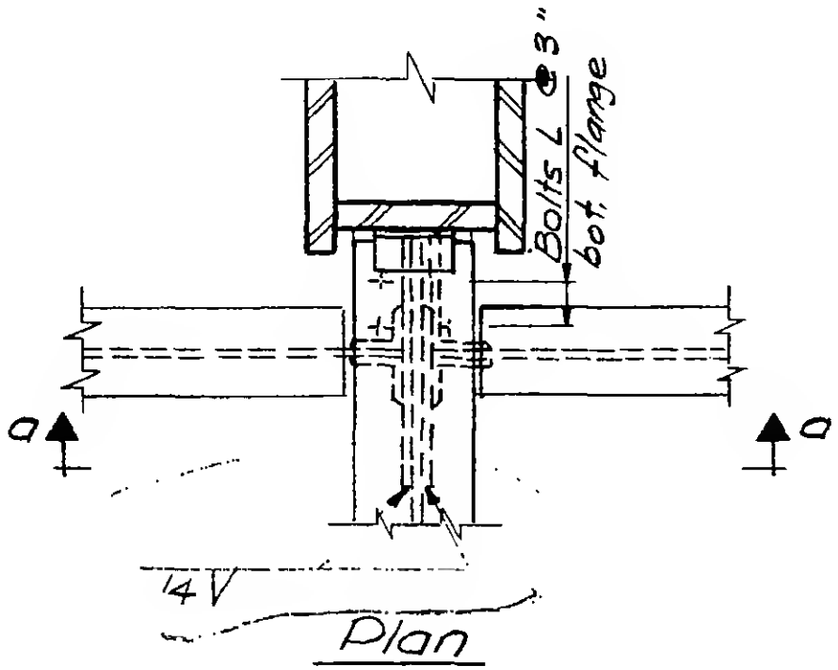

Plan

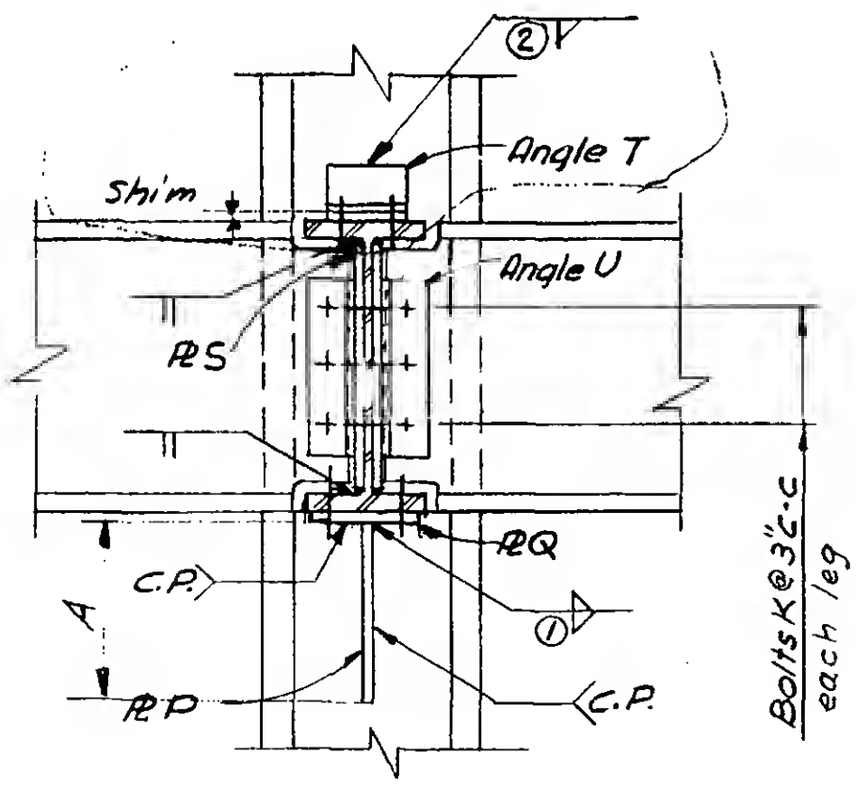

Section a-a

LICENSED PROFESSIONAL ENGINEER
LESLIE E. ROBERTSON
No. 34360
UNIVERSITY OF THE STATE OF NEW YORK

6-AB1-94

WORTHINGTON, SKILLING, HELLE & JACKSON, Civil & Structural Engineers

PROJECT THE WORLD TRADE CENTER | TITLE SCHEDULE FOR DETAIL 287 A, B | DATE 6-30-67

REVISIONS

7-28-67

	287 A	287 B
PLATES		
P	7½" × 15/16"	7" × 11/16"
Q	7½" × 15/16"	8" × 34"
S	2 PL ¼ × 1'-9"	2 PL 3/16 × 1'-6"
ANGLES		
T	4 × 4 × ¼ × 0'-8"	4 × 4 × ¼ × 0'-6"
U	4L-4 × 3½ × 7/16 × 0'-8½	4L-4 × 3½ × 7/16 × 0'-8½
DIMENSIONS		
A	1'-3"	1'-3"
BOLTS		
K	3-1" φ (A 325)	3-1" φ (A 325)
L	4-¾ φ (A 325)	4-¾ φ (A 325)
WELDS		
①	5/16	5/16
②	¼	¼

LICENSED PROFESSIONAL ENGINEER LESLIE E. ROBERTSON No. 34360 UNIVERSITY OF THE STATE OF NEW YORK

6-ABI-94.1

WORTHINGTON, SKILLING, HELLE & JACKSON — Civil & Structural Engineers

PROJECT: THE WORLD TRADE CENTER | TITLE: CONNECTION DETAIL 287 ~~C, D, E, F~~ G, H | DATE: 6-30-67

REVISIONS
7-28-67
8-5-67

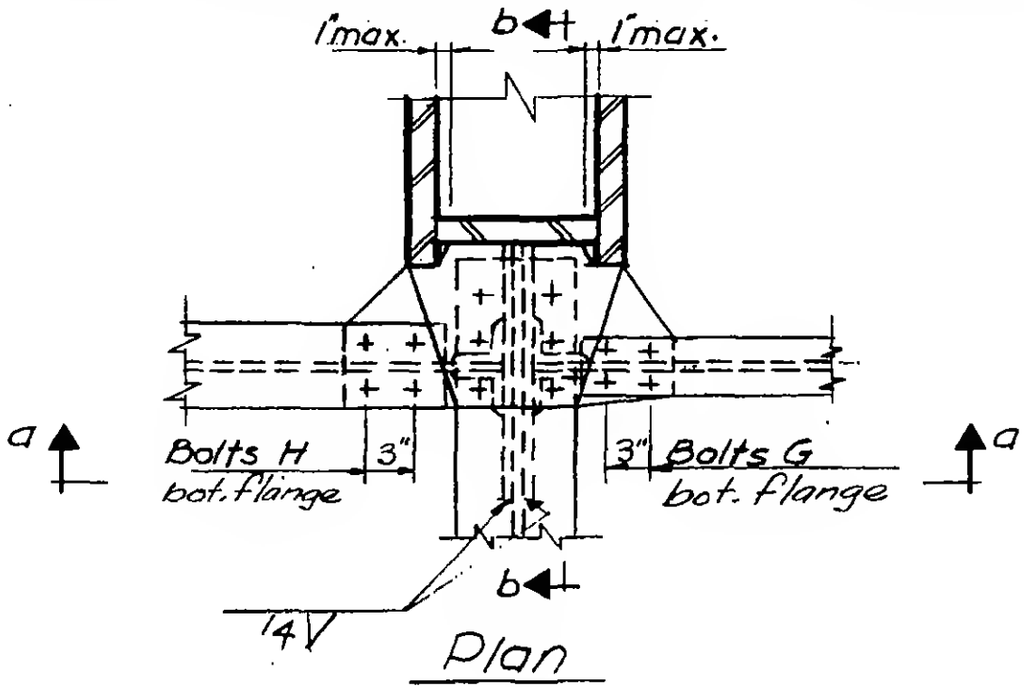

Plan

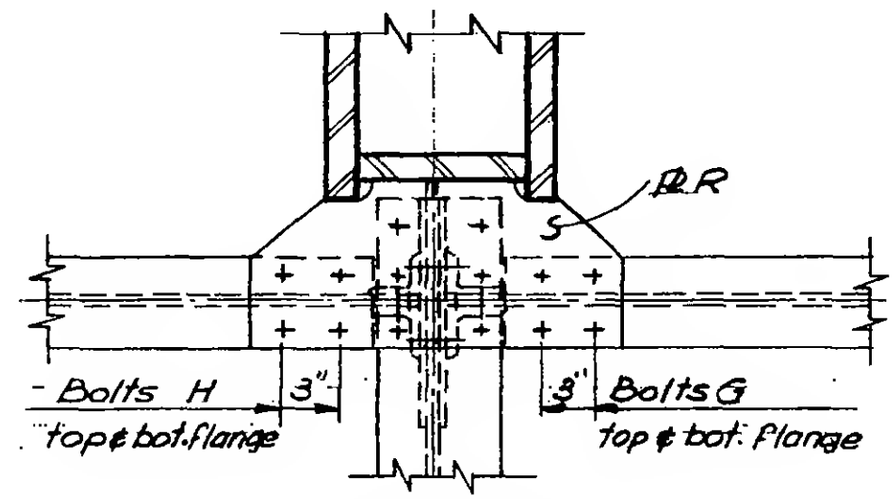

Plan
detail 287 G & H only

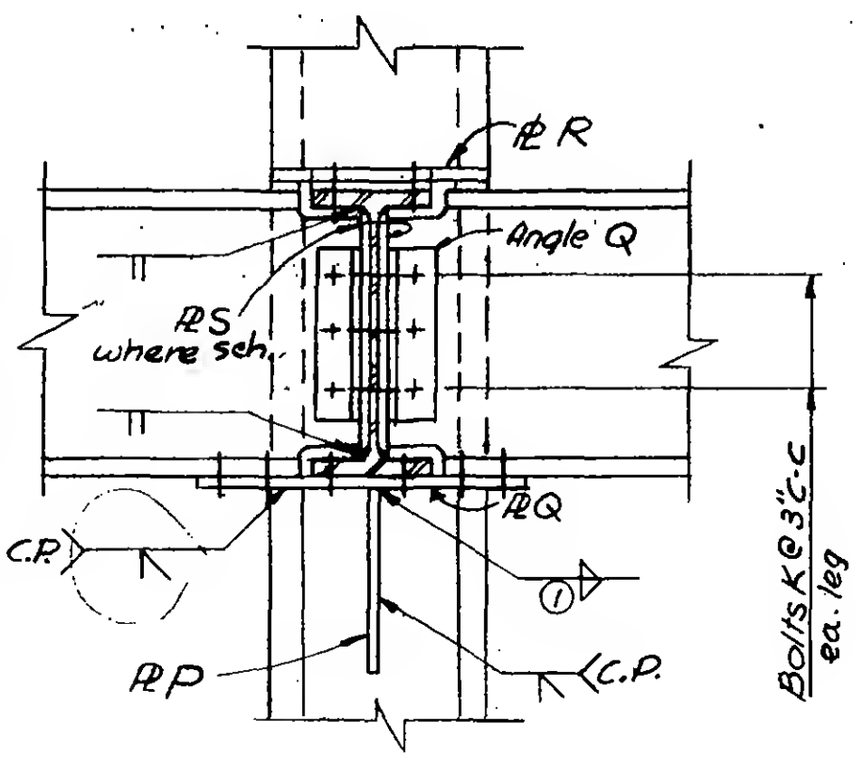

Section a-a

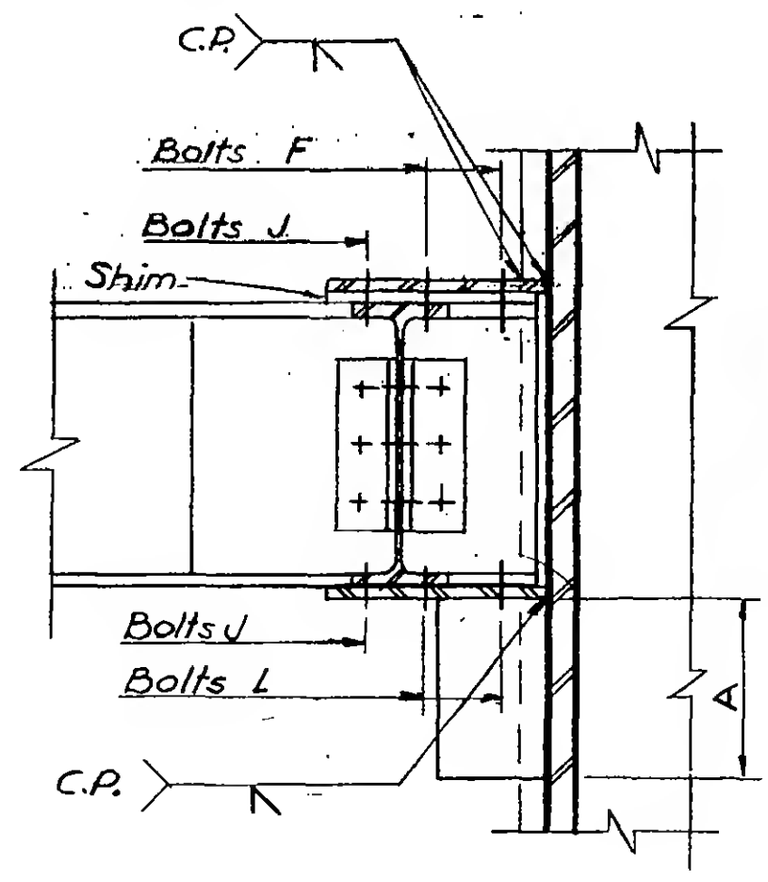

Section b-b

6-AB1-94.2

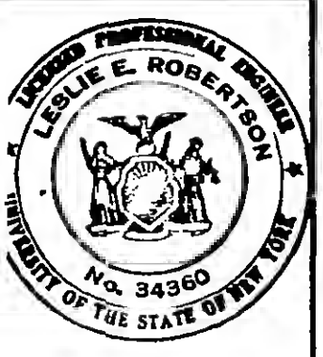

SKILLING - HELLE - CHRISTIANSEN - ROBERTSON Structural & Civil Engineers

PROJECT: THE WORLD TRADE CENTER | TITLE: SCHEDULE FOR DETAIL 287 C, D, E, F, G, H | DATE: 6-30-67

REVISIONS
7-28-67
8-5-67
1-24-68

	287 C	287 D	287 E	287 F	287 G	287 H
PLATES						
P	8" x 7/8"	7" x 1/2"	6" x 5/8"	6" x 3/4"	6" x 3/4"	8" x 7/8"
Q	7/8"	1/2"	5/8"	3/4"	3/4"	7/8"
R	5/8"	1/2"	5/8"	3/4"	3/4"	3/4"
S	2 PL - 3/16" x 1'-6"	—	—	—	—	—
ANGLES						
Q	4L - 4 x 3 1/2 x 7/16 x 0'-8 1/2"	4L - 4 x 3 1/2 x 5/16 x 0'-8 1/2"	4 x 3 1/2 x 5/16	4 x 3 1/2 x 5/16	4 x 3 1/2 x 5/16	4 x 3 1/2 x 5/16
DIMENSIONS						
A	1'-3"	1'-3"	1'-0"	1'-4"	1'-2"	1'-2"
BOLTS						
F	4 - 1 1/8" φ (A325) @ 3 3/4"	6 - 1 1/8" φ (A325) @ 3"	4 - 3/4" φ	4 - 1" φ	4 - 3/4" φ	4 - 3/4" φ
G	4 - 3/4" φ (A325)	4 - 3/4" φ (A325)	4 - 3/4" φ	4 - 7/8" φ	4 - 1 1/8" φ	4 - 3/4" φ
H	4 - 3/4" φ (A325)	4 - 3/4" φ (A325)	4 - 3/4" φ	4 - 7/8" φ	4 - 1 1/8" φ	4 - 3/4" φ
J	2 - 1 1/8" φ (A325)	—	2 - 3/4" φ	2 - 1" φ	2 - 3/4" φ	2 - 3/4" φ
K	3 - 1" φ (A325)	3 - 3/4" φ (A325)	3 - 3/4" φ	3 - 3/4" φ	3 - 1" φ	3 - 1" φ
L	4 - 1 1/8" φ (A325) @ 3 3/4"	6 - 1 1/8" φ (A325) @ 3"	4 - 3/4" φ	4 - 1" φ	4 - 3/4" φ	4 - 3/4" φ
WELDS						
①	5/16	5/16	5/16	3/8	3/8	3/8

LICENSED PROFESSIONAL ENGINEER LESLIE E. ROBERTSON No. 34360 UNIVERSITY OF THE STATE OF NEW YORK

6-AB1-94.3

WORTHINGTON, SKILLING, HELLE & JACKSON — Civil & Structural Engineers

PROJECT: THE WORLD TRADE CENTER | TITLE: CONNECTION DETAIL 288 A | DATE: 5-22-67

REVISIONS

10-2-67

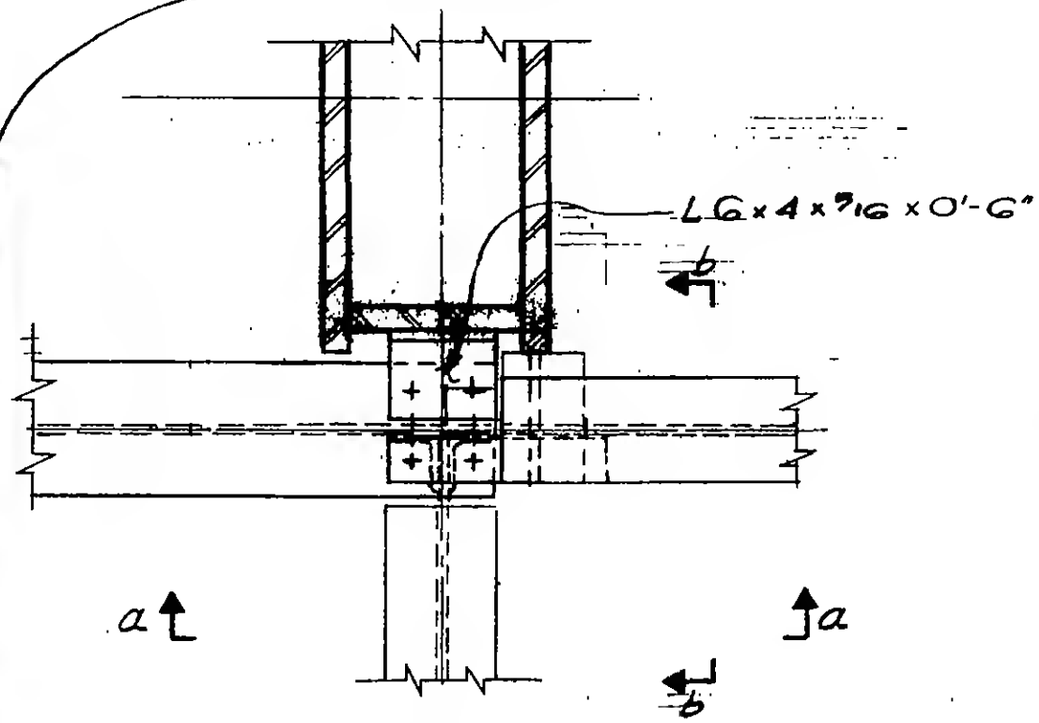

Plan

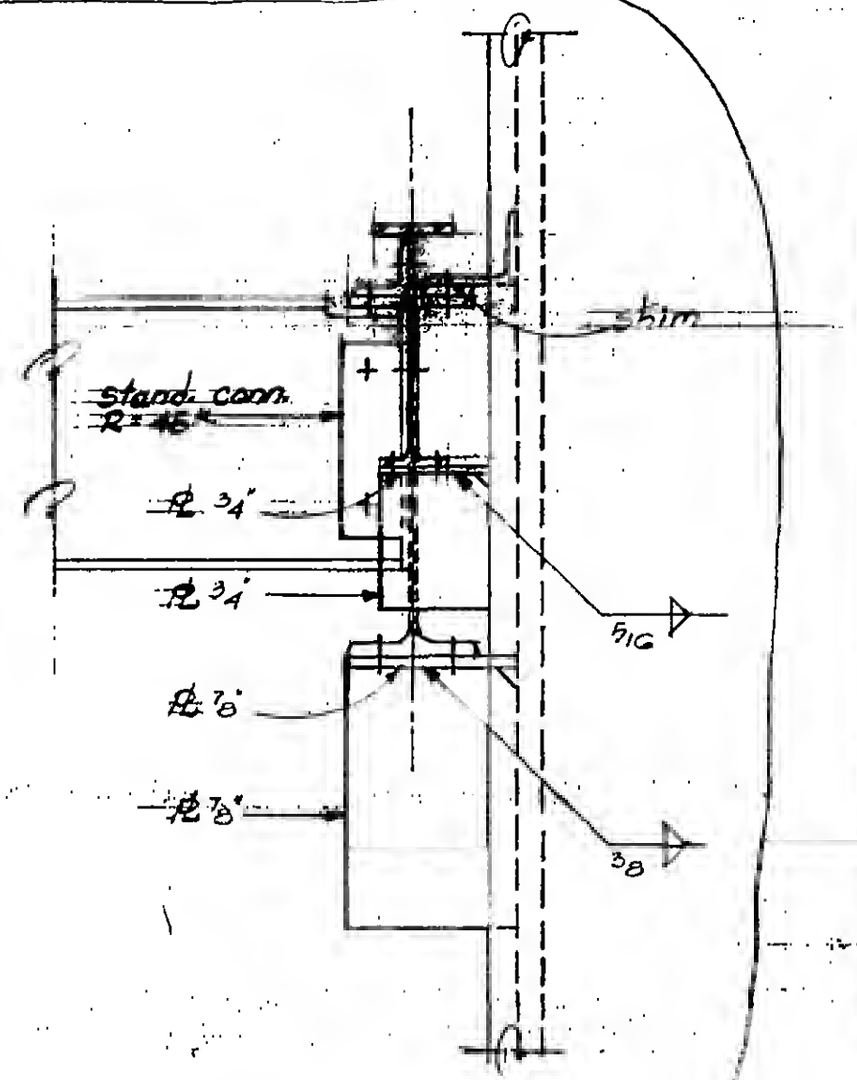

Section b-b

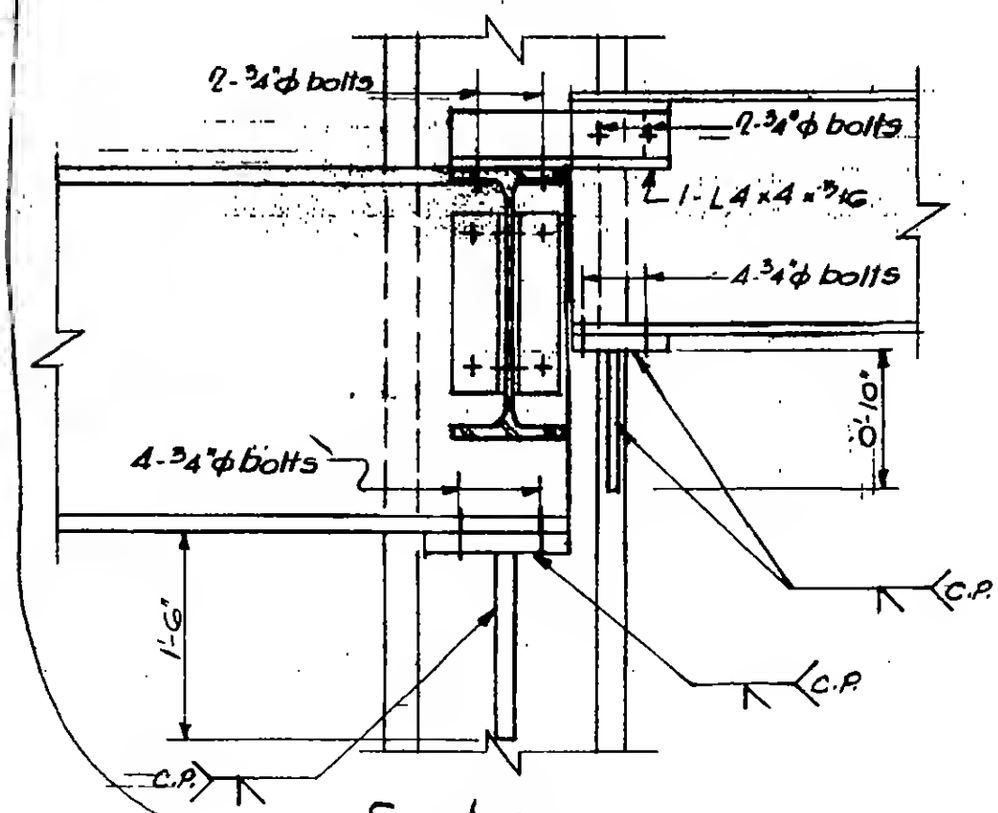

Section a-a

LICENSED PROFESSIONAL ENGINEER
LESLIE E. ROBERTSON
No. 34360
UNIVERSITY OF THE STATE OF NEW YORK

6-AB1-95

WORTHINGTON, SKILLING, HELLE & JACKSON — Civil & Structural Engineers

PROJECT: WORLD TRADE CENTER | TITLE: CONNECTION DETAIL 289 | DATE: 7/20/67

REVISIONS

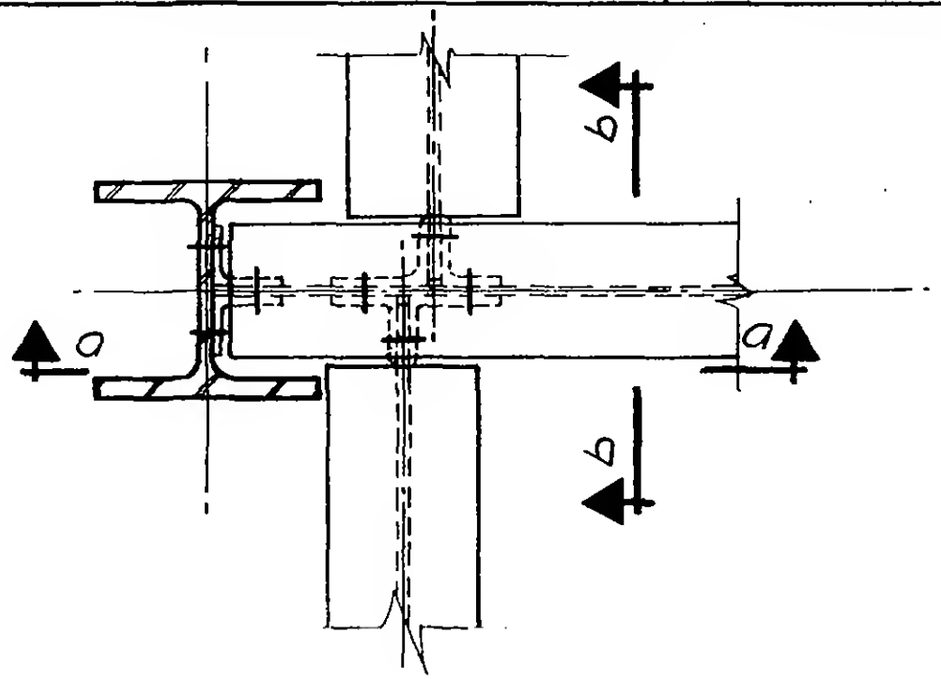

PLAN

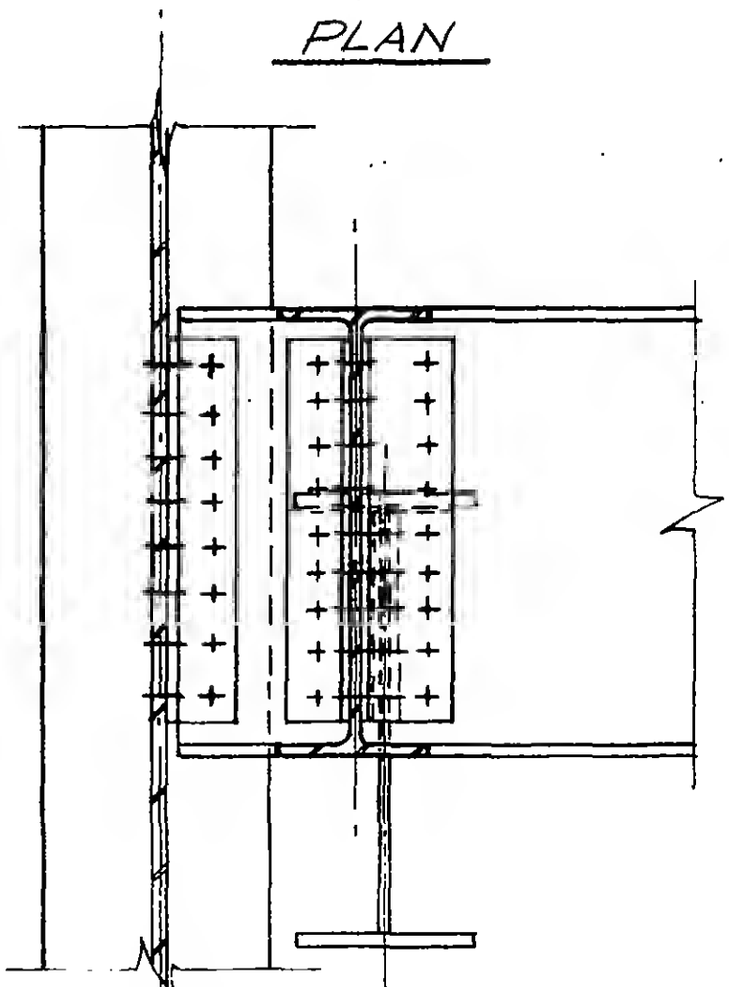

SECTION a-a

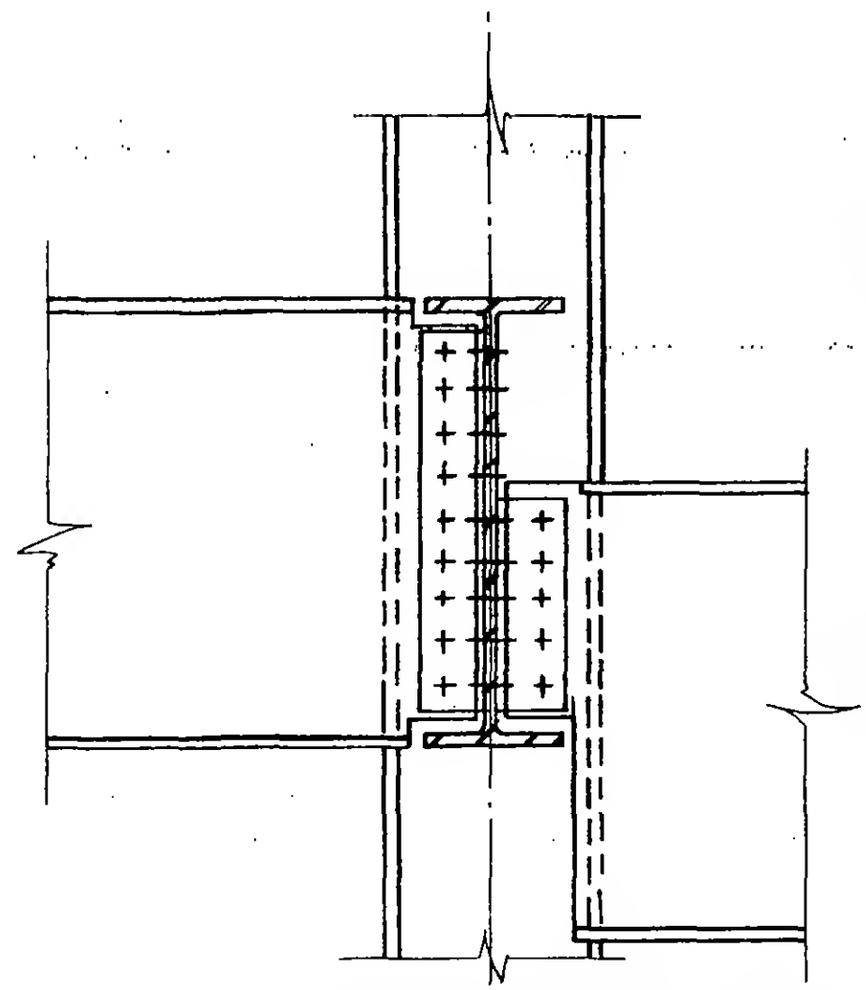

SECTION b-b

G-AB1-96

LESLIE E. ROBERTSON
No. 34360
LICENSED PROFESSIONAL ENGINEER
UNIVERSITY OF THE STATE OF NEW YORK

WORTHINGTON, SKILLING, HELLE & JACKSON — Civil & Structural Engineers

PROJECT: THE WORLD TRADE CENTER | TITLE: CONNECTION DETAIL 290A | DATE: 6-30-67

REVISIONS

10-5-67

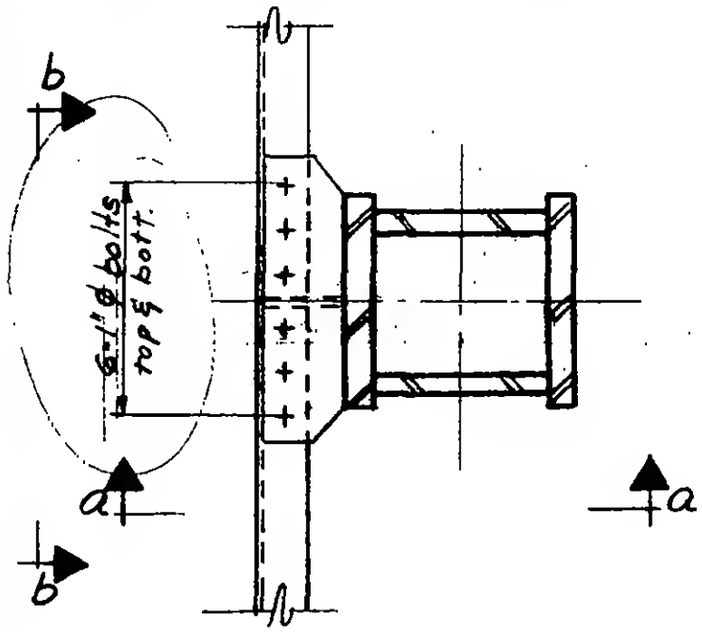

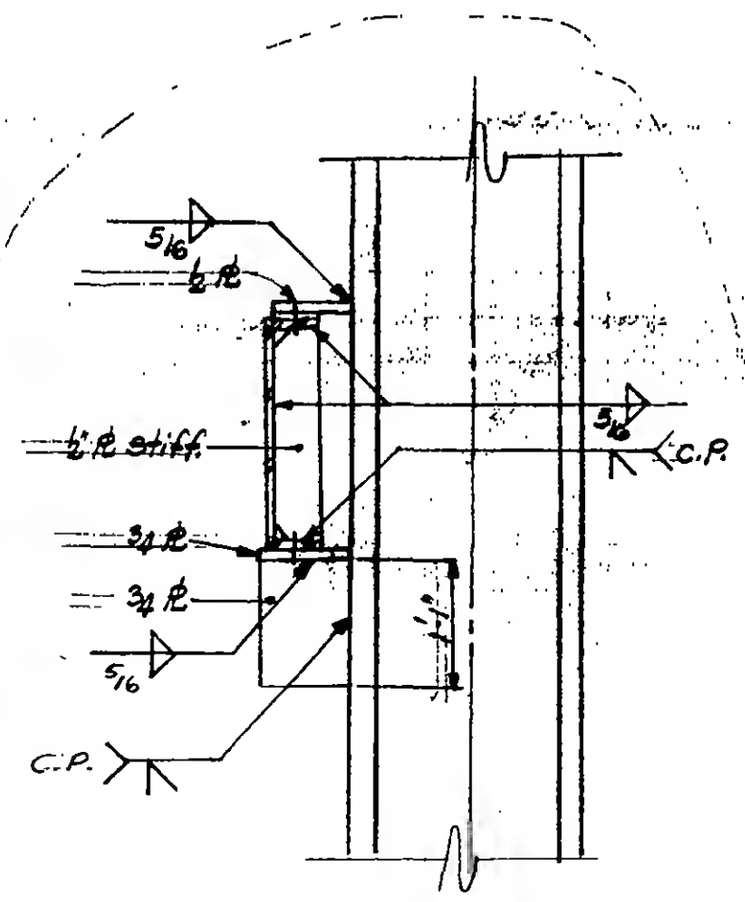

SECTION a-a

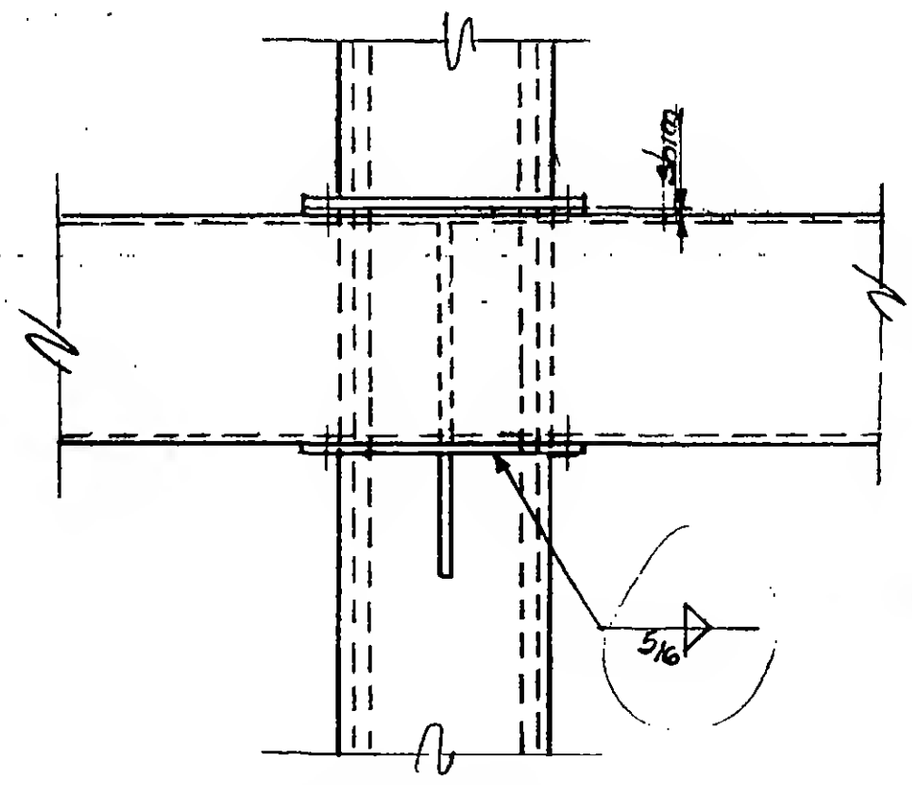

SECTION b-b

LICENSED PROFESSIONAL ENGINEER
LESLIE E. ROBERTSON
No. 34960
UNIVERSITY OF THE STATE OF NEW YORK

G-ABI-97

WORTHINGTON, SKILLING, HELLE & JACKSON — Civil & Structural Engineers

PROJECT: THE WORLD TRADE CENTER | TITLE: CONNECTION DETAIL 29-A | DATE: 6-5-68

REVISIONS

10-2-67

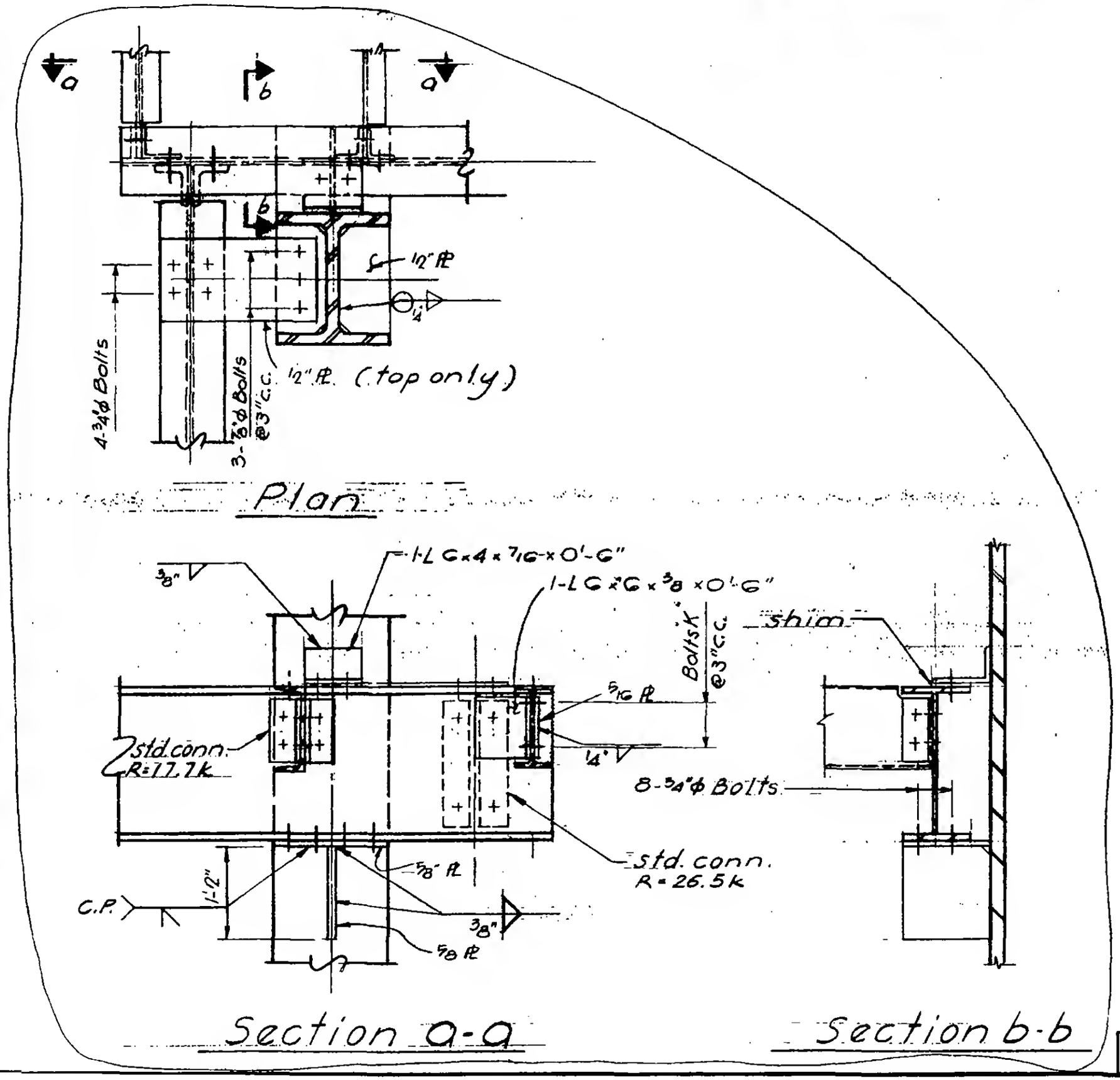

LICENSED PROFESSIONAL ENGINEER LESLIE E. ROBERTSON No. 34360 UNIVERSITY OF THE STATE OF NEW YORK

6-ABI-98

SKILLING - HELLE - CHRISTIANSEN - ROBERTSON — Structural & Civil Engineers

PROJECT: THE WORLD TRADE CENTER | TITLE: CONNECTION DETAIL 2 [illegible] | DATE: 9-15-67

REVISIONS

11-10-67

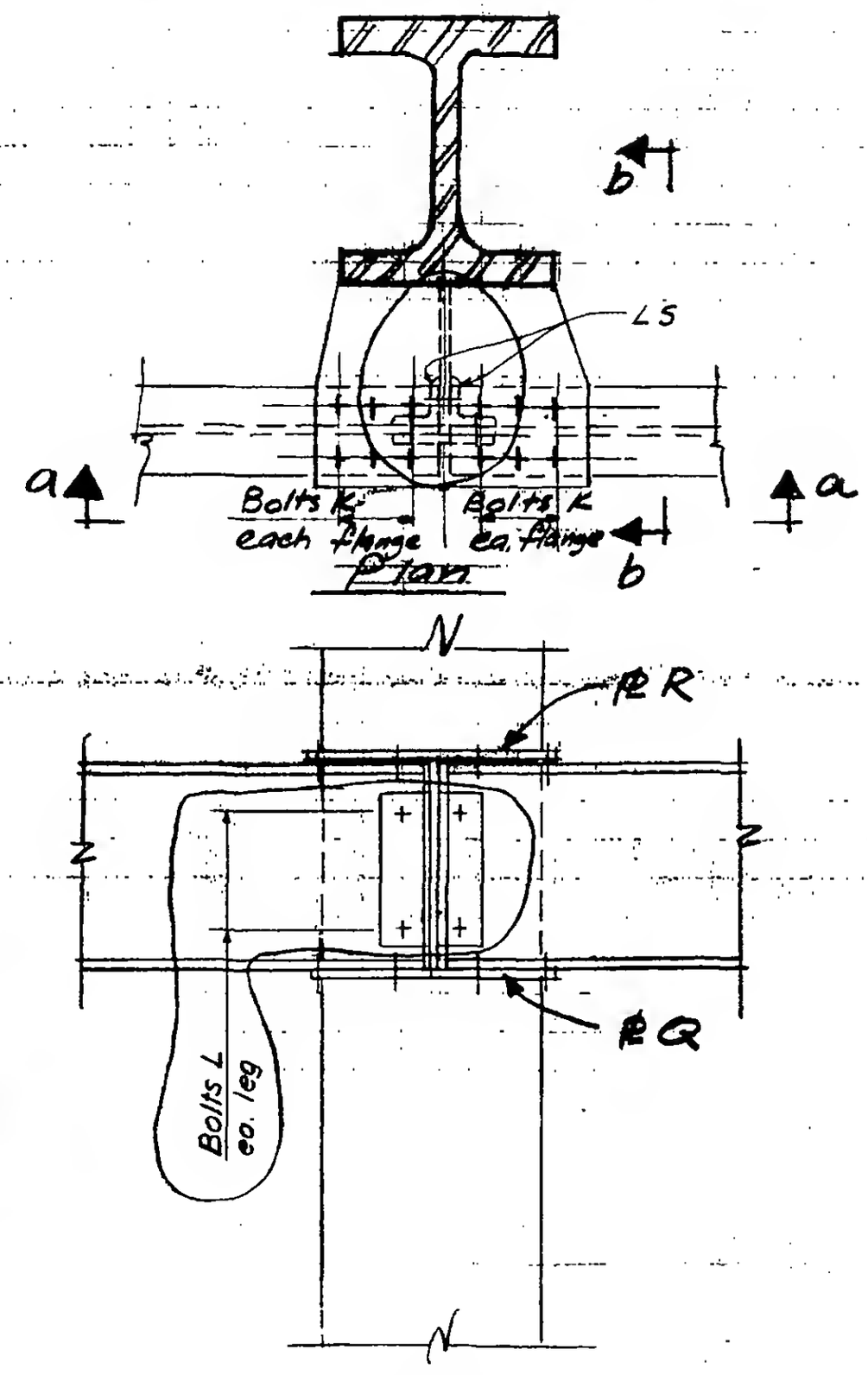

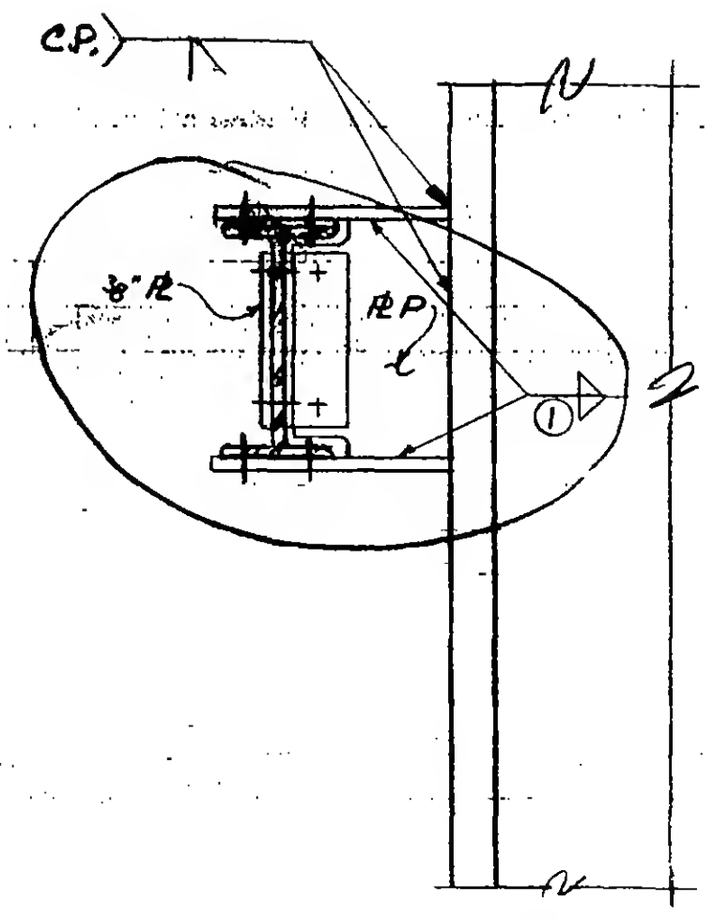

6-AB1-99

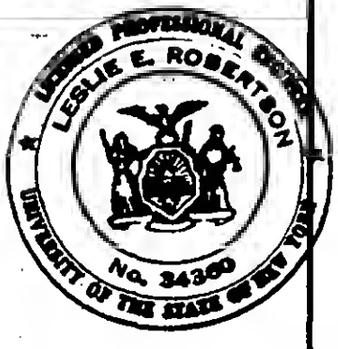

SKILLING - HELLE - CHRISTIANSEN - ROBERTSON Structural & Civil Engineers

PROJECT THE WORLD TRADE CENTER TITLE SCHEDULE FOR DETAIL 292 A DATE 9-15-67

REVISIONS

11-10-67

	292A
PLATE	
P	1"
Q	3/4"
R	5/8"
ANGLE	
S	4 x 3½ x 5/16
BOLT	
K	6-3/8" ϕ
L	4-3/4" ϕ
WELD	
①	3/8

LICENSED PROFESSIONAL ENGINEER
LESLIE E. ROBERTSON
No. 34360
UNIVERSITY OF THE STATE OF NEW YORK

6-AB1-99.1

SKILLING - HELLE - CHRISTIANSEN - ROBERTSON — Structural & Civil Engineers

PROJECT: THE WORLD TRADE CENTER | TITLE: CONNECTION DETAIL 292 C | DATE: 10-2-67

REVISIONS
11-17-67

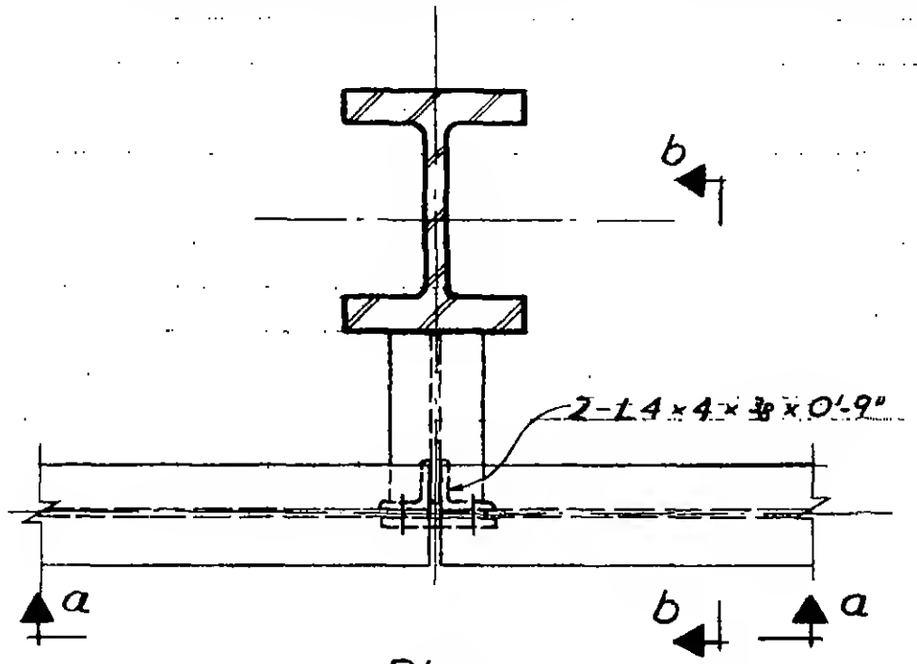

Plan

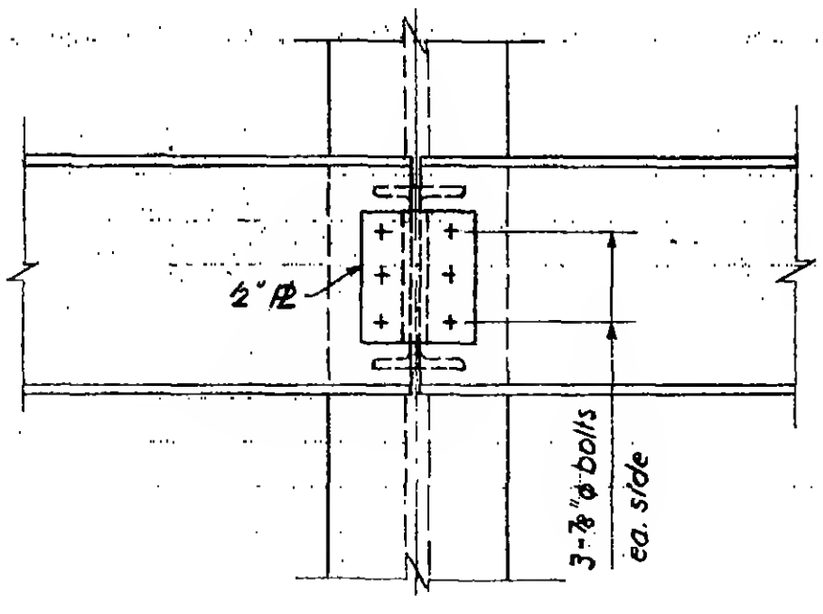

Section a-a

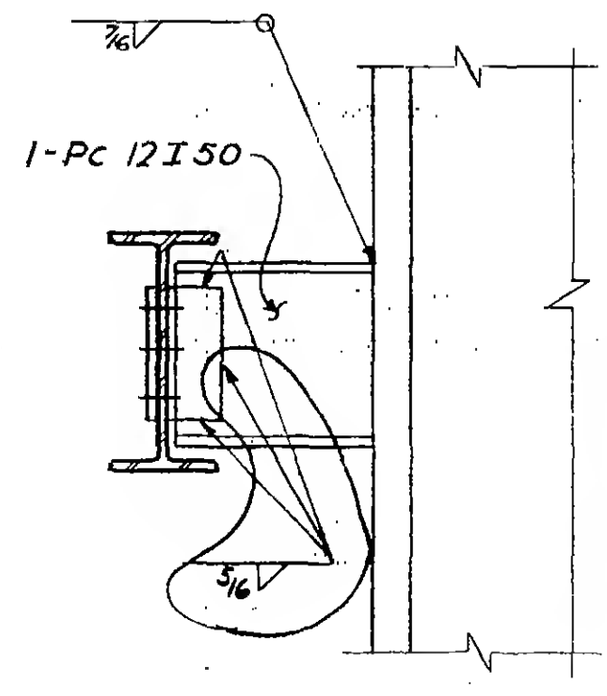

Section b-b

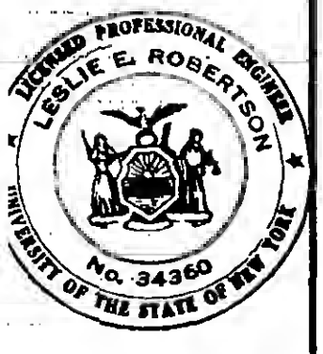

6-AB1-99.2

SKILLING - HELLE - CHRISTIANSEN - ROBERTSON — Structural & Civil Engineers

PROJECT: THE WORLD TRADE CENTER | TITLE: CONNECTION DETAIL 299 B | DATE: 10-5-67

REVISIONS

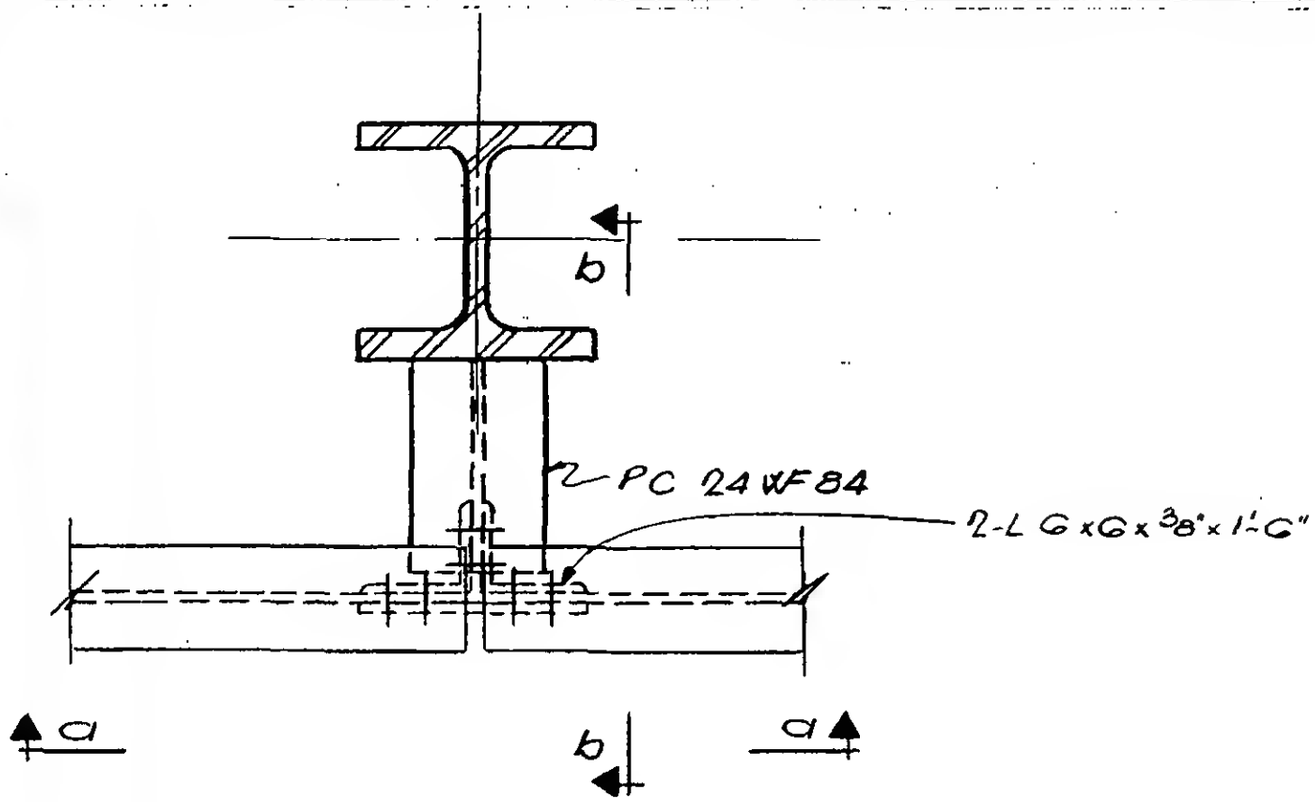

Plan

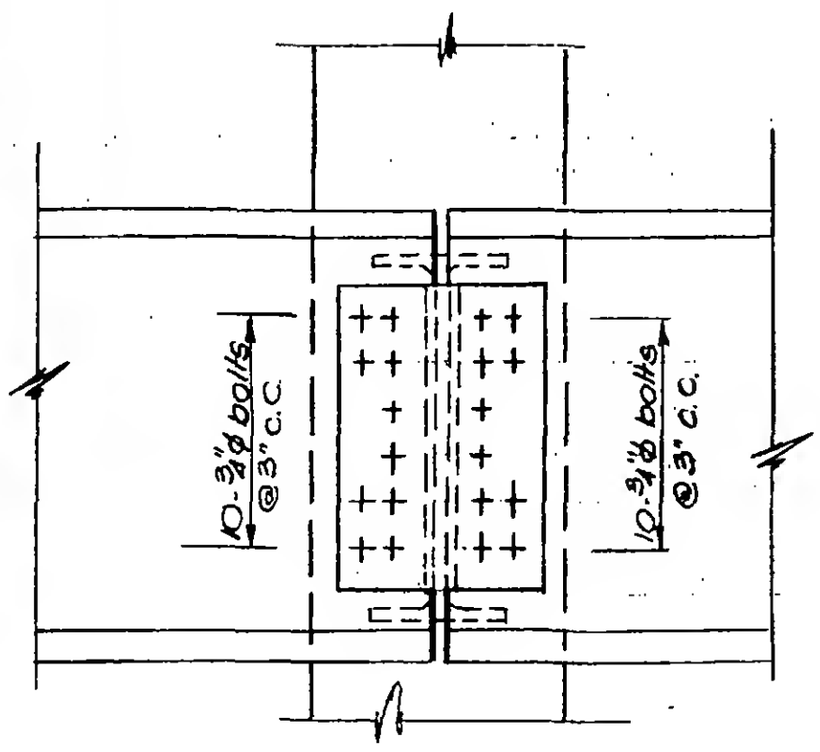

Section a-a.

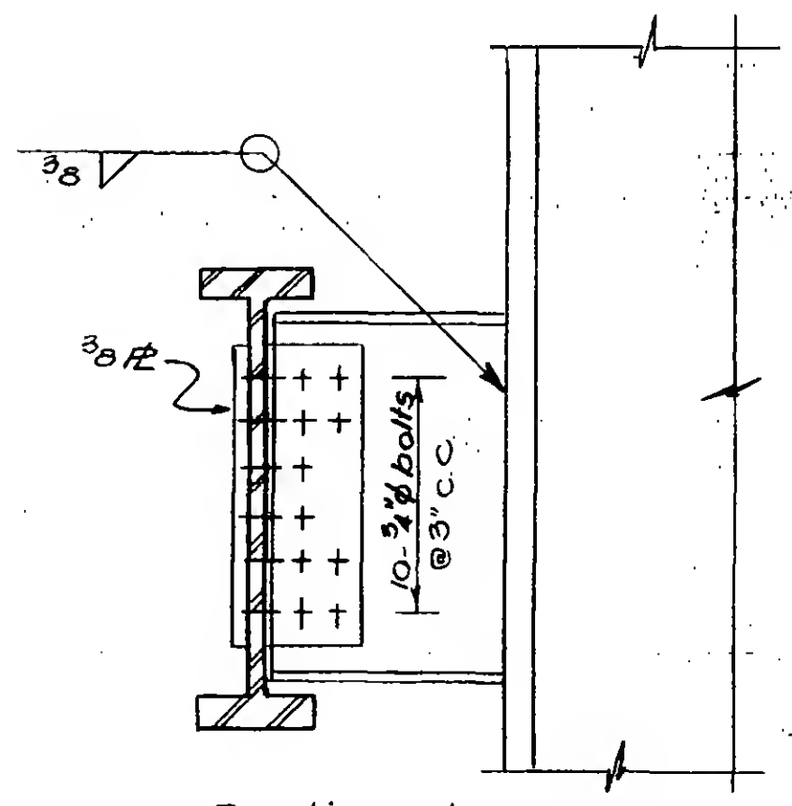

Section b-b

LICENSED PROFESSIONAL ENGINEER LESLIE E. ROBERTSON No. 34240 STATE OF NEW YORK

G-ABT-99.3

SKILLING - HELLE - CHRISTIANSEN - ROBERTSON — Structural & Civil Engineers

PROJECT THE WORLD TRADE CENTER — THE CONNECTION DETAIL 295 A — DATE 6-30-67

REVISIONS

10-5-67

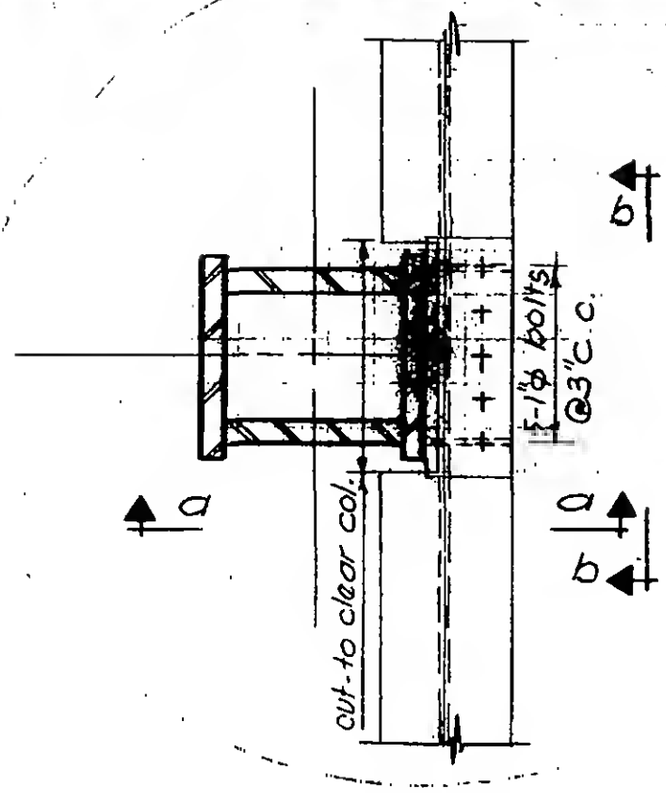

Plan

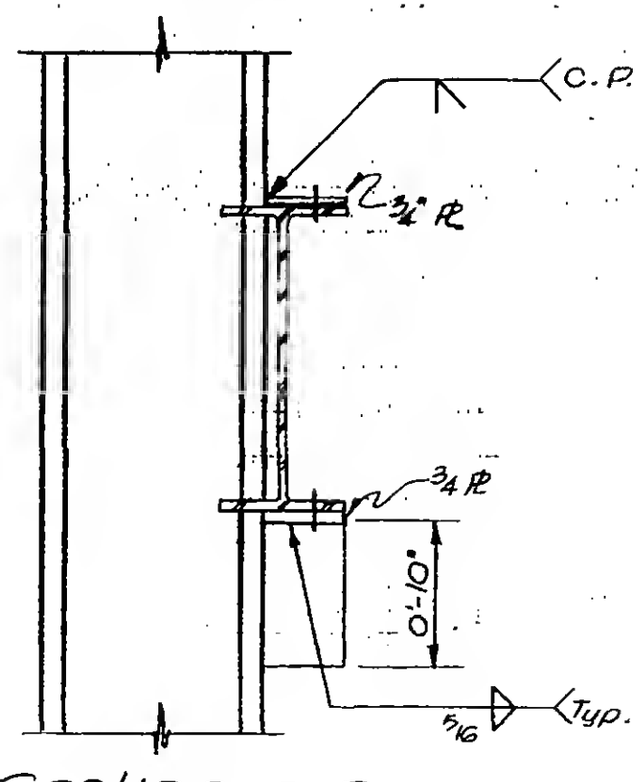

Section a-a

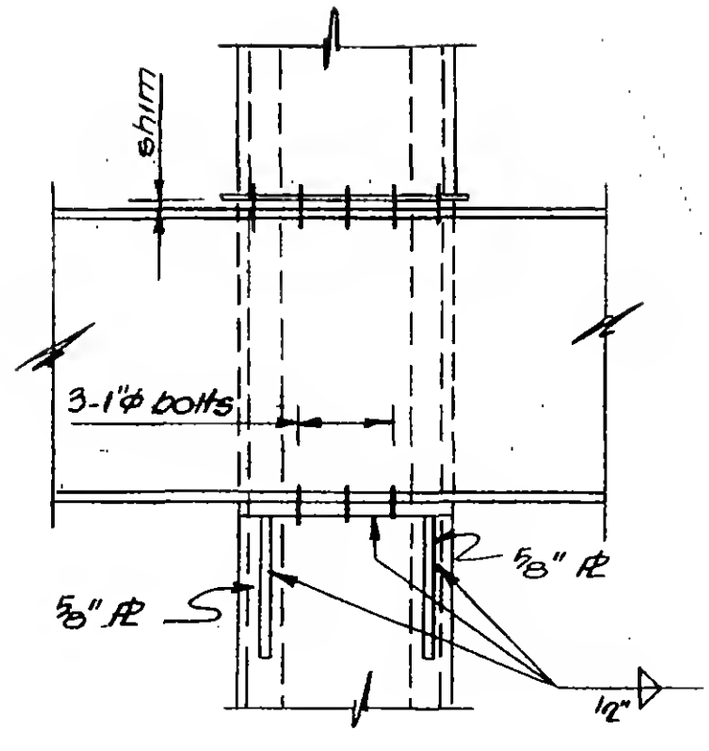

Section b-b

6-AB1-100

LEONE E. ROBERTSON
No. 34360
UNIVERSITY OF THE STATE OF NEW YORK

WORTHINGTON, SKILLING, HELLE & JACKSON — Civil & Structural Engineers

PROJECT: THE WORLD TRADE CENTER | TITLE: CONNECTION DETAIL 294 A | DATE: 6-12-67

REVISIONS

7-28-67

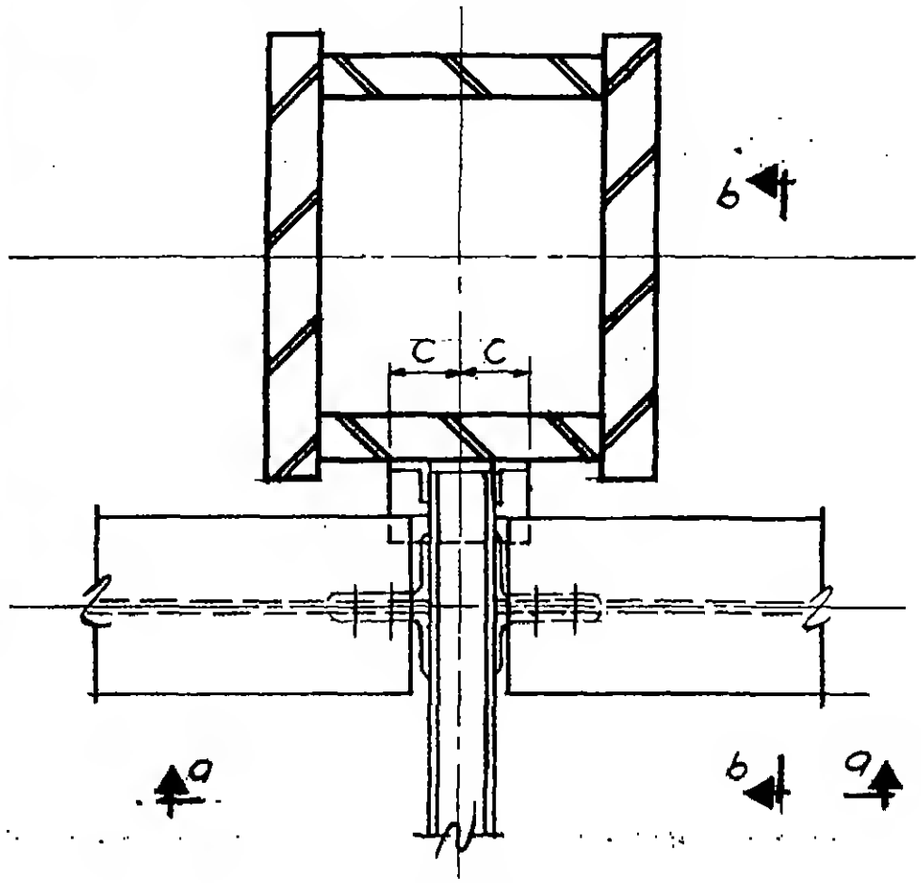

PLAN

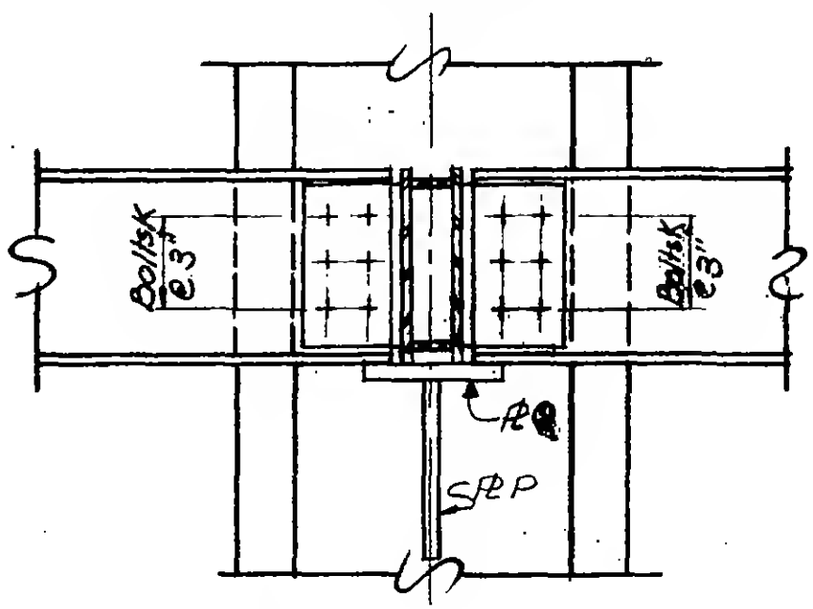

Section a-a

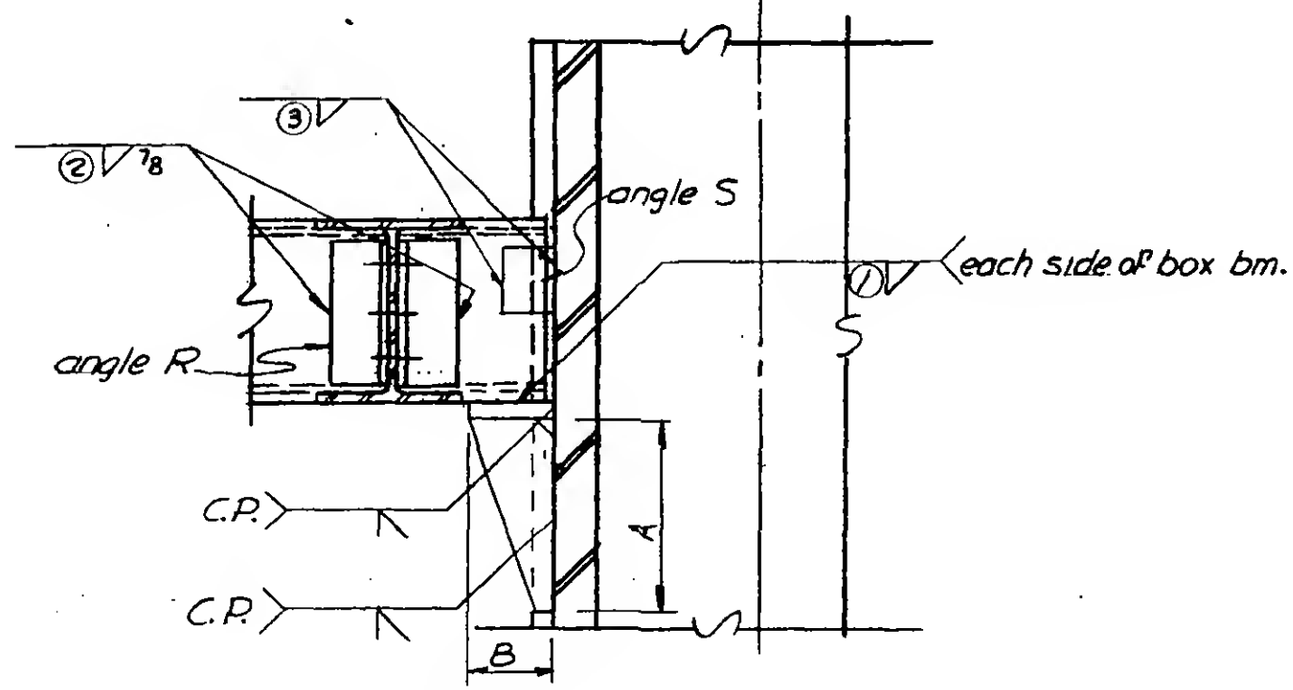

Section b-b

6-AB1-101

WORTHINGTON, SKILLING, HELLE & JACKSON — Civil & Structural Engineers

PROJECT: THE WORLD TRADE CENTER | TITLE: SCHEDULE FOR DETAIL 294 A | DATE: 7-28-67

REVISIONS

	294 A	294 D				
PLATES						
P	1"	1"				
Q	1"	1/2"				
ANGLES						
R	2-6"x4"x1"x0'-9 3/4"					
S	2-4"x4"x5/16"x0'-6"					
DIMENSIONS						
A	1'-8"					
B	0'-6"					
C	0'-7"					
BOLTS						
K	6-7/8"φ					
WELDS						
1	9/16"					
2	7/8"					
3	5/16"					

LICENSED PROFESSIONAL ENGINEER
LESLIE E. ROBERTSON
No. 34360
UNIVERSITY OF THE STATE OF NEW YORK

6-AB1-101.1

WORTHINGTON, SKILLING, HELLE & JACKSON — Civil & Structural Engineers

PROJECT: THE WORLD TRADE CENTER | TITLE: CONNECTION DETAIL 294 B, C | DATE: 8-14-67

REVISIONS

11-14-67

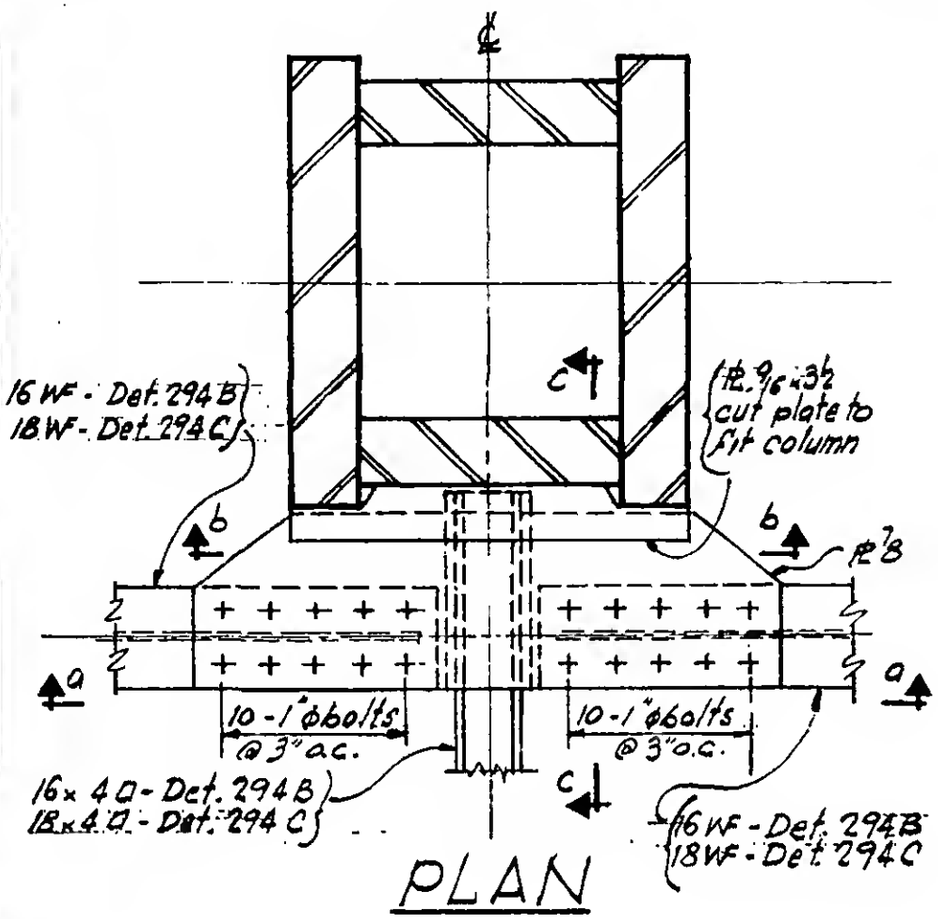

PLAN

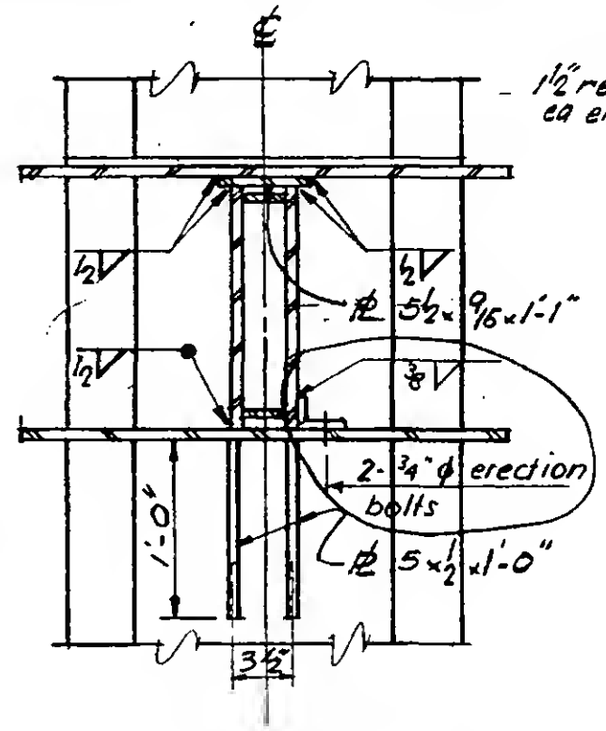

Section b-b

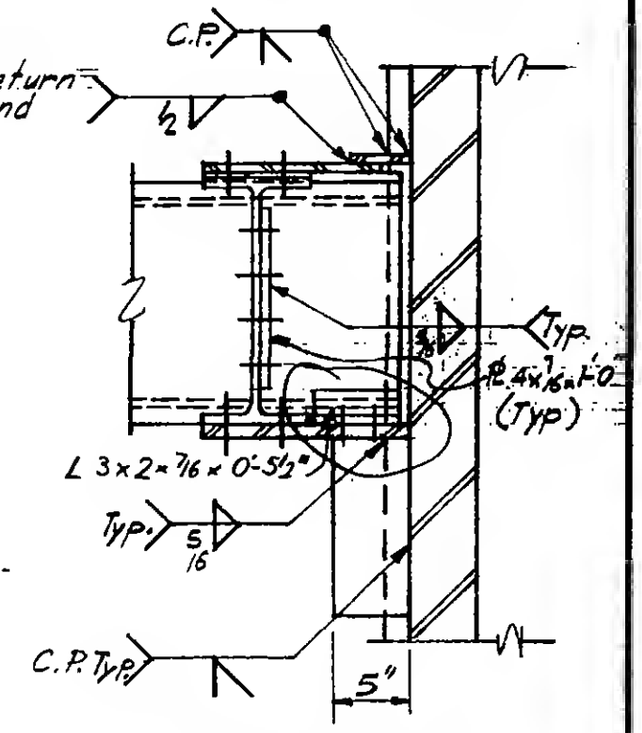

Section c-c

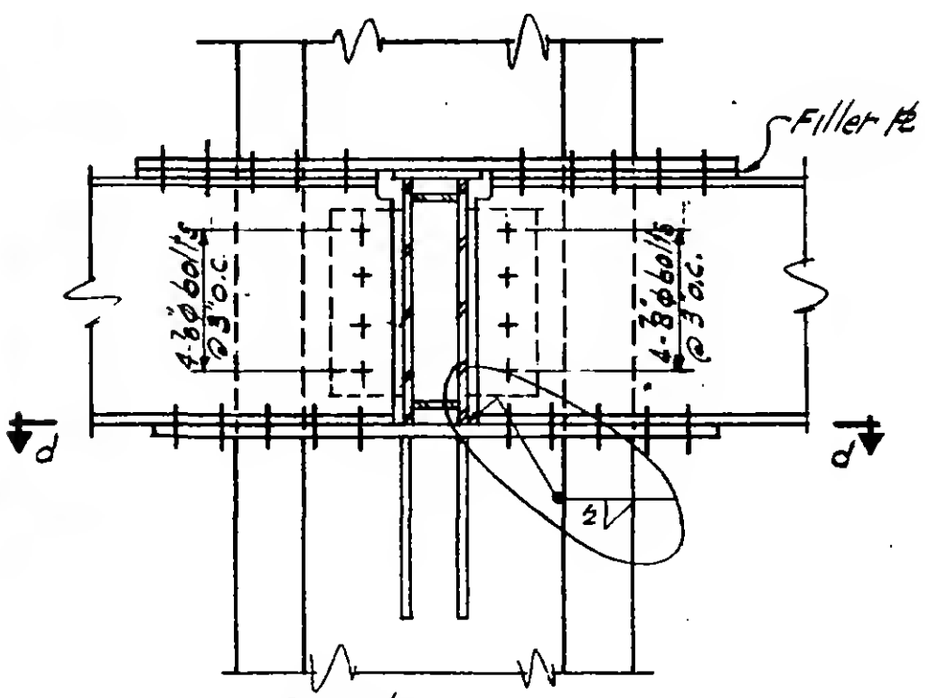

Section a-a

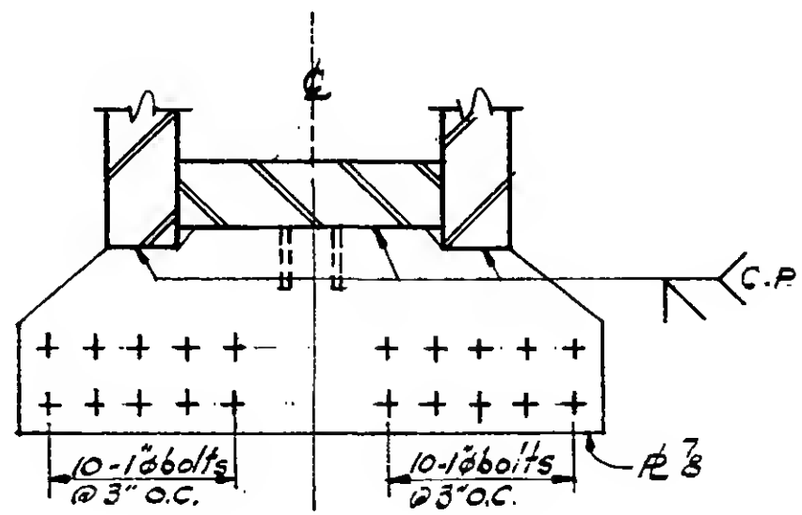

Section d-d

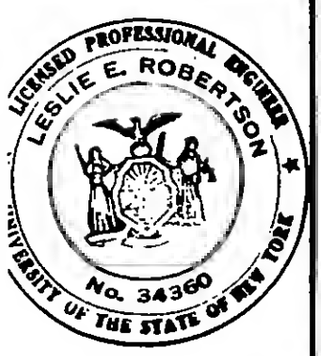

6-AB1-101.2

SKILLING - HELLE - CHRISTIANSEN - ROBERTSON — Structural & Civil Engineers

PROJECT: THE WORLD TRADE CENTER | TITLE: CONNECTION DETAIL 294 D | DATE: 9-15-67

REVISIONS

10-2-67
11-14-67

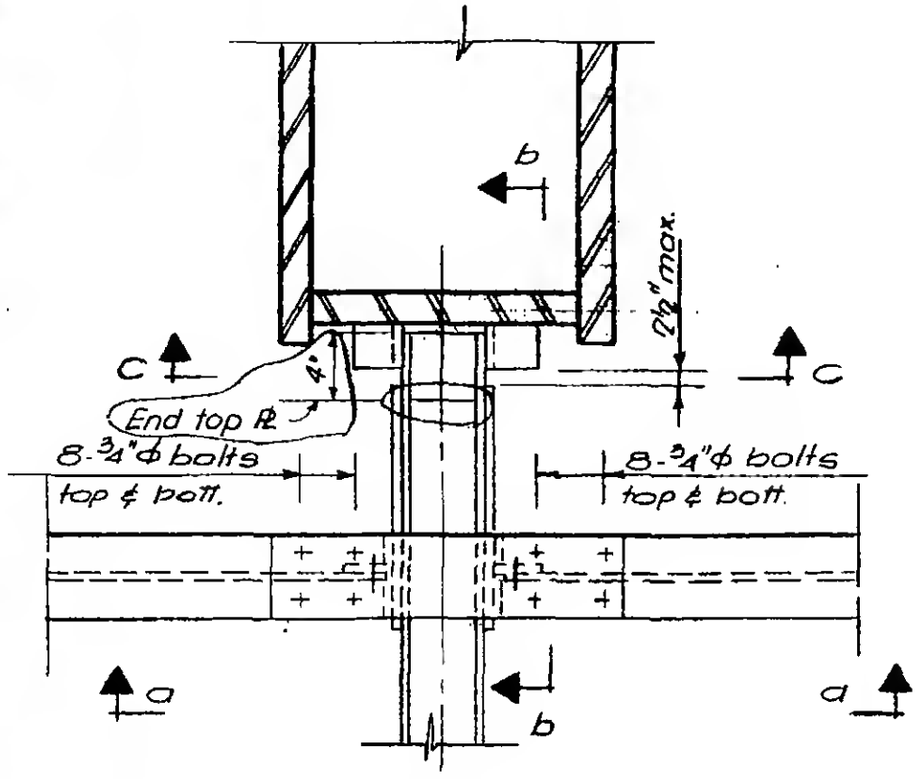

Plan

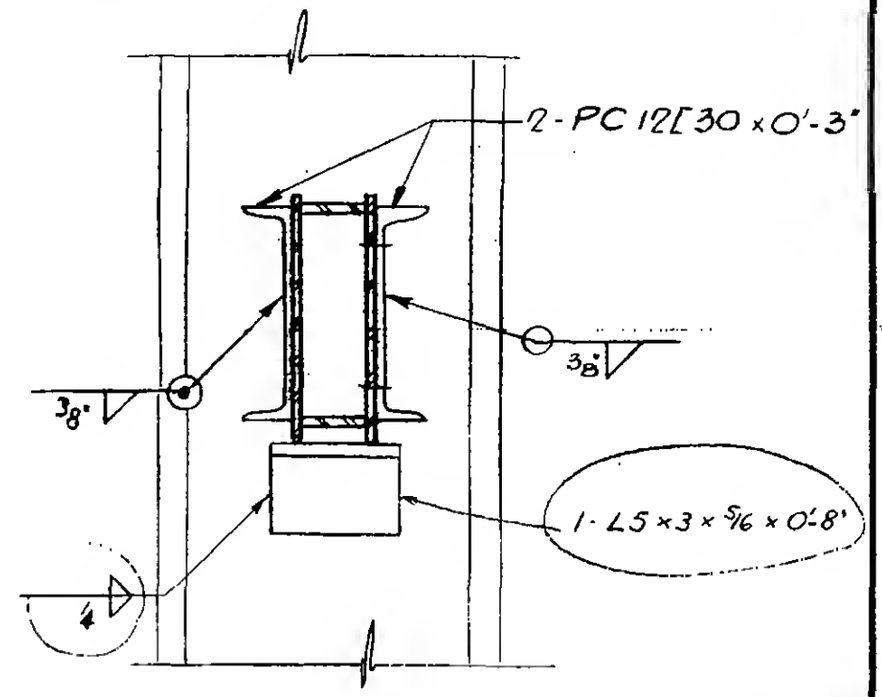

Section c-c

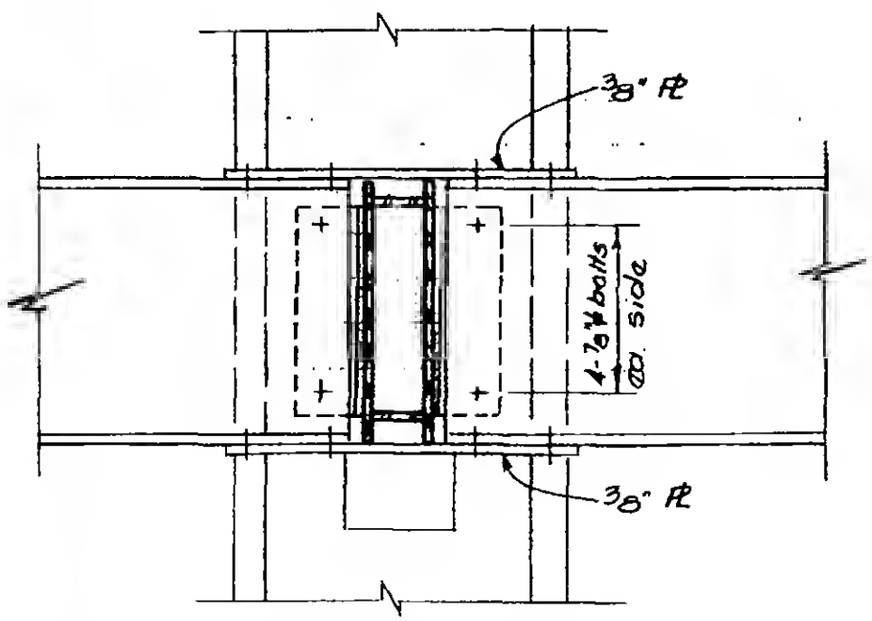

Section a-a

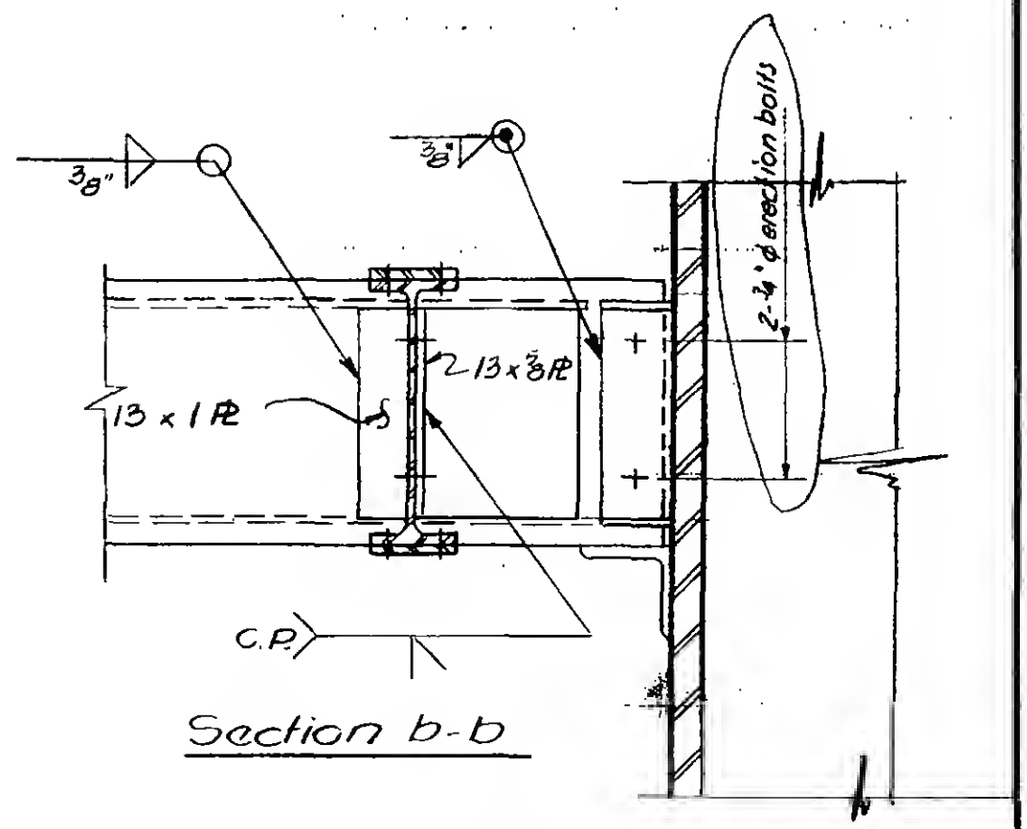

Section b-b

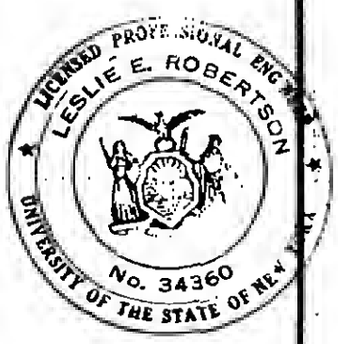

G-AB1-101.3

WORTHINGTON, SKILLING, HELLE & JACKSON — Civil & Structural Engineers

PROJECT: THE WORLD TRADE CENTER | TITLE: CONNECTION DETAIL 295 A, D | DATE: 6-5-67

REVISIONS

10-2-67

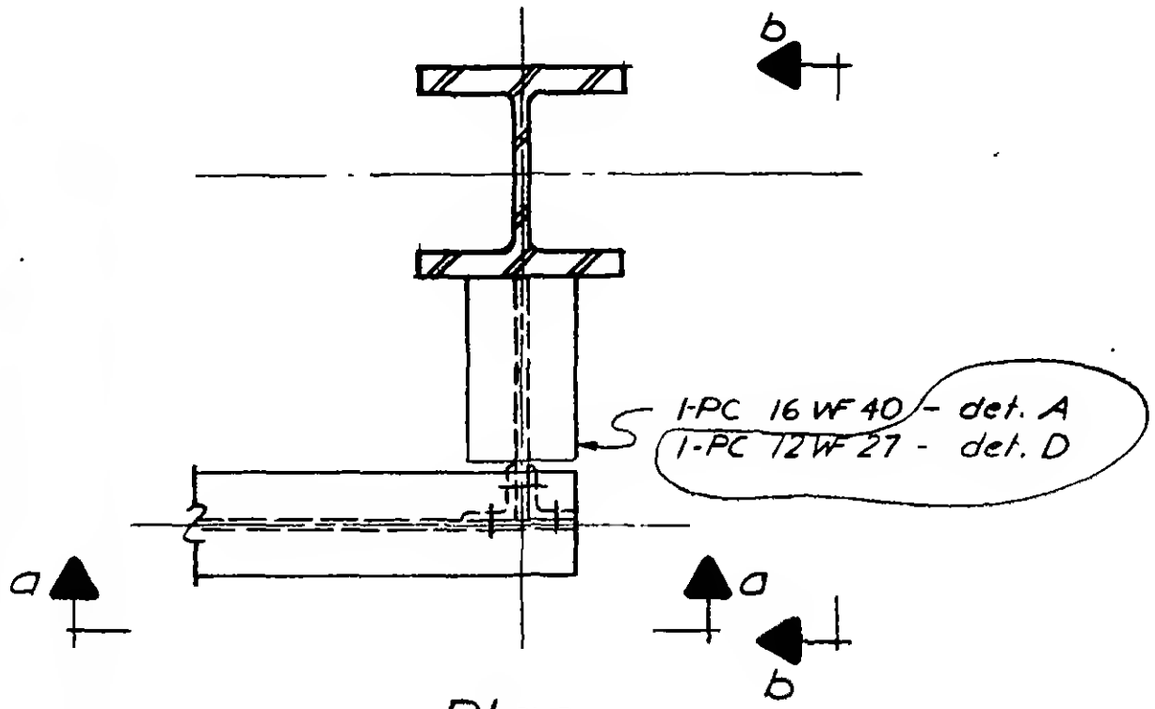

Plan

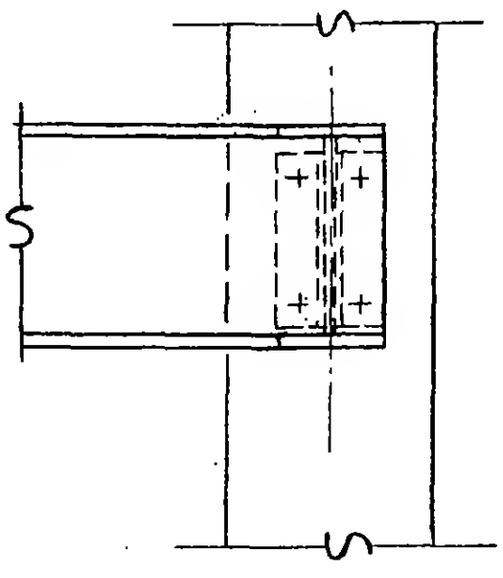

Section a-a

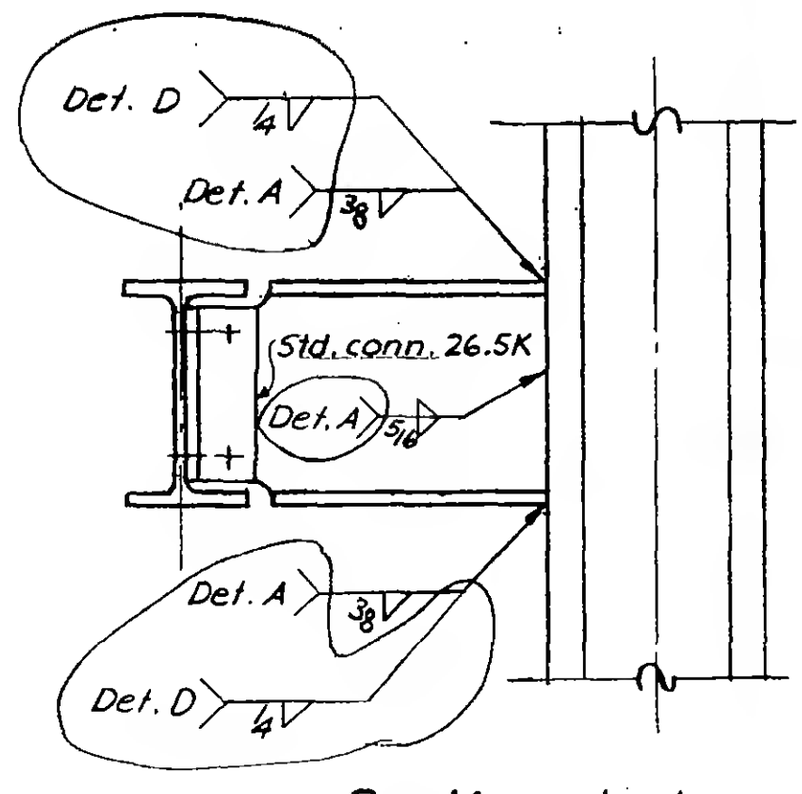

Section b-b

6-AB1-102

SKILLING - HELLE - CHRISTIANSEN - ROBERTSON Structural & Civil Engineers

PROJECT: THE WORLD TRADE CENTER | TITLE: CONNECTION DETAIL 295 F,G | DATE: 12-21-67

REVISIONS

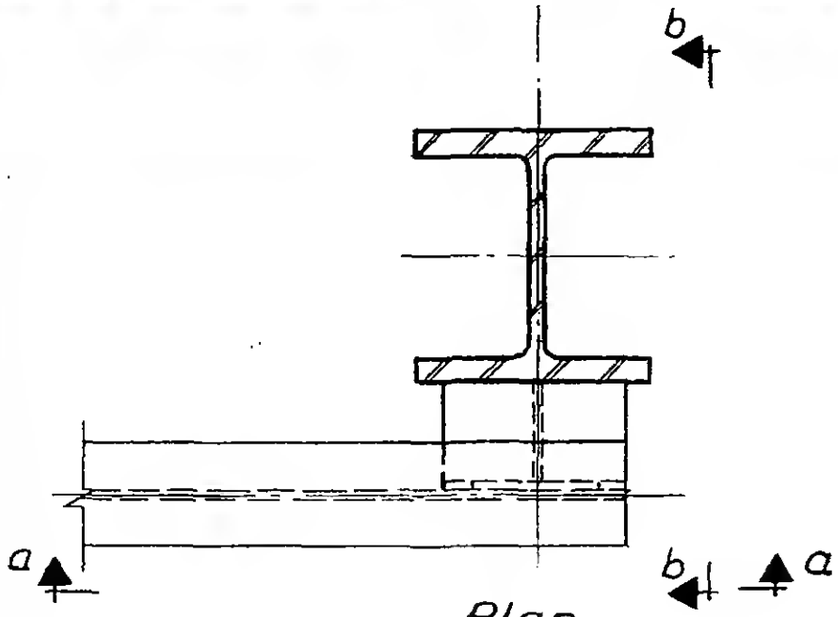

Plan

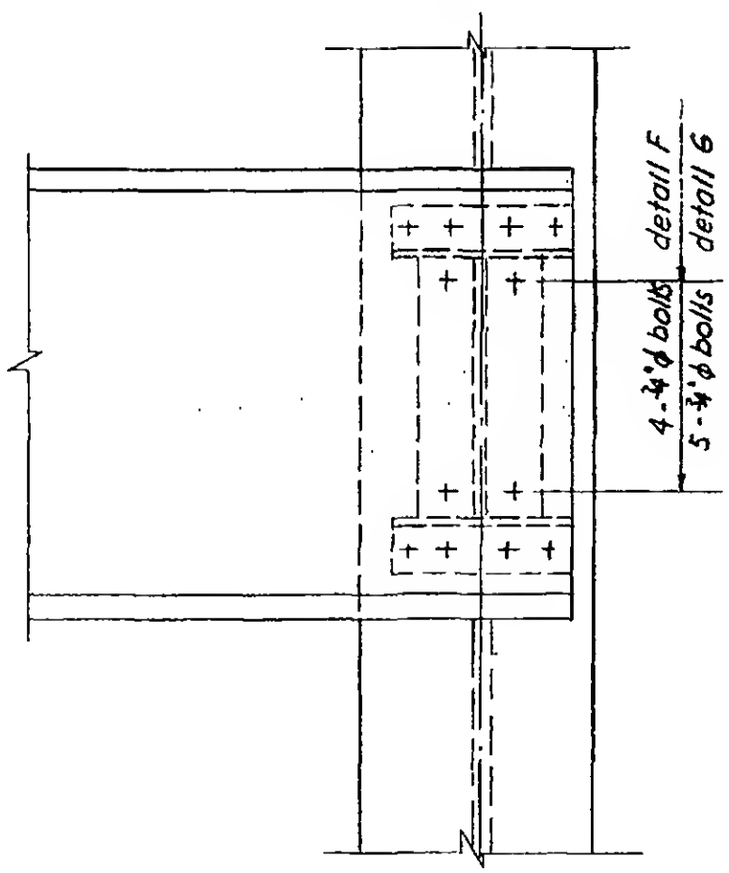

Section a-a

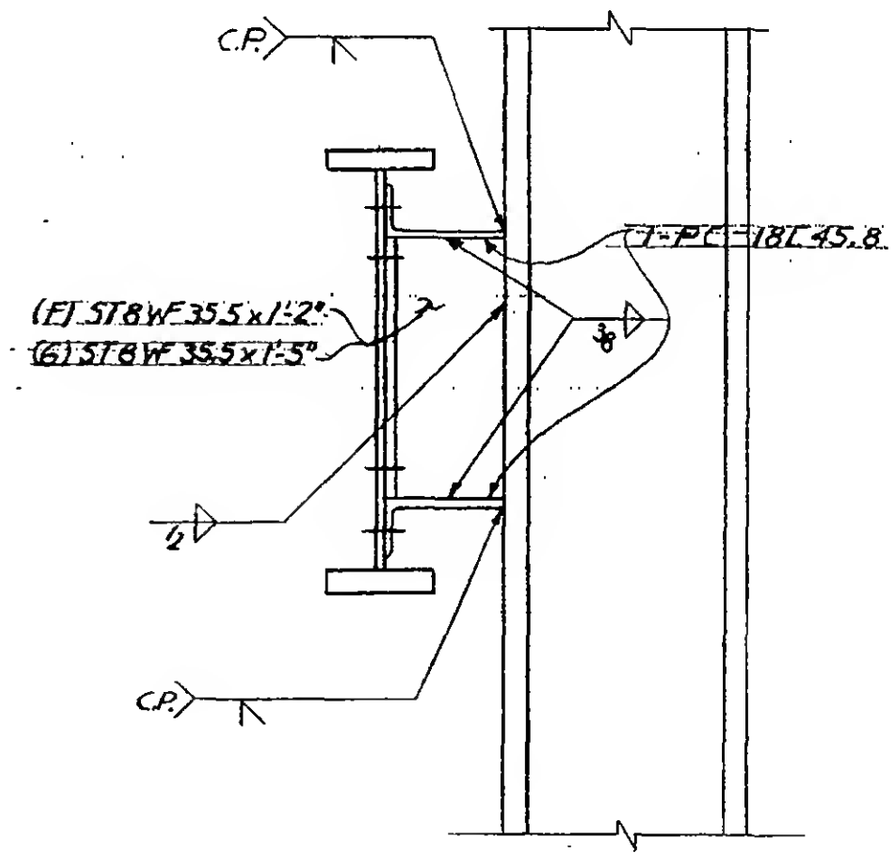

Section b-b

6-ABI-102.1

WORTHINGTON, SKILLING, HELLE & JACKSON — Civil & Structural Engineers

PROJECT: THE WORLD TRADE CENTER | TITLE: CONNECTION DETAIL 296 A, B, C, H | DATE: 5-9-67

REVISIONS
7-28-67
9-15-67
11-14-67
12-21-67

Schedule			
	Plate P	Welds ①	Welds ②
296 A	6 × 5/16 × 1'-2"	1/4	5/16
296 B	6 × 5/16 × 1'-2"	1/4	5/16
296 C	6 × 5/16 × 1'-2"	1/4	5/16
296 H	6 × 5/8 × 1'-2"	1/2	9/16

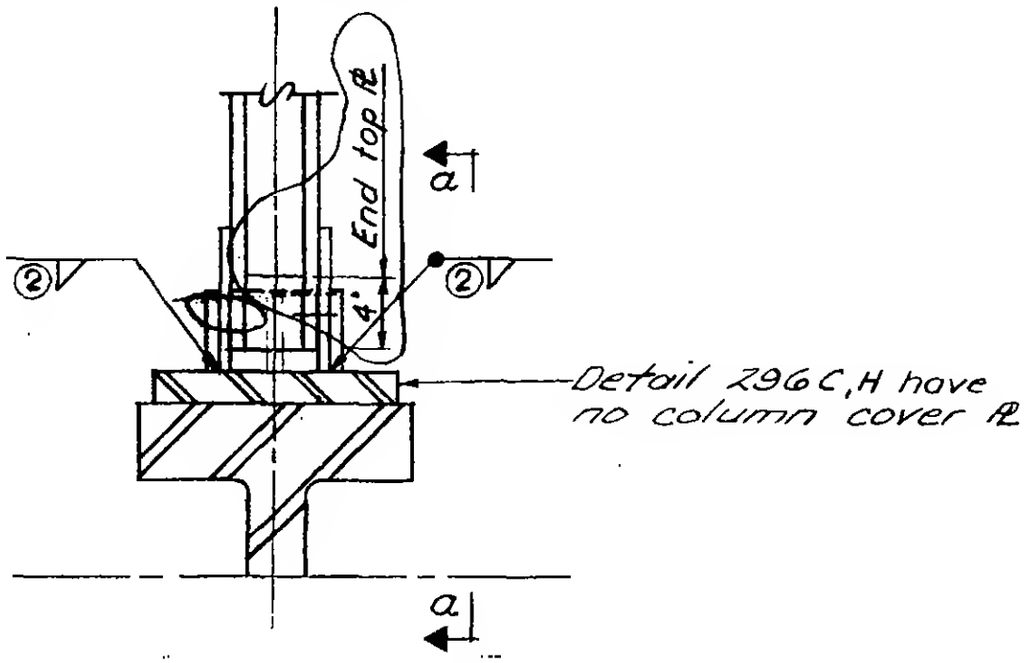

Plan

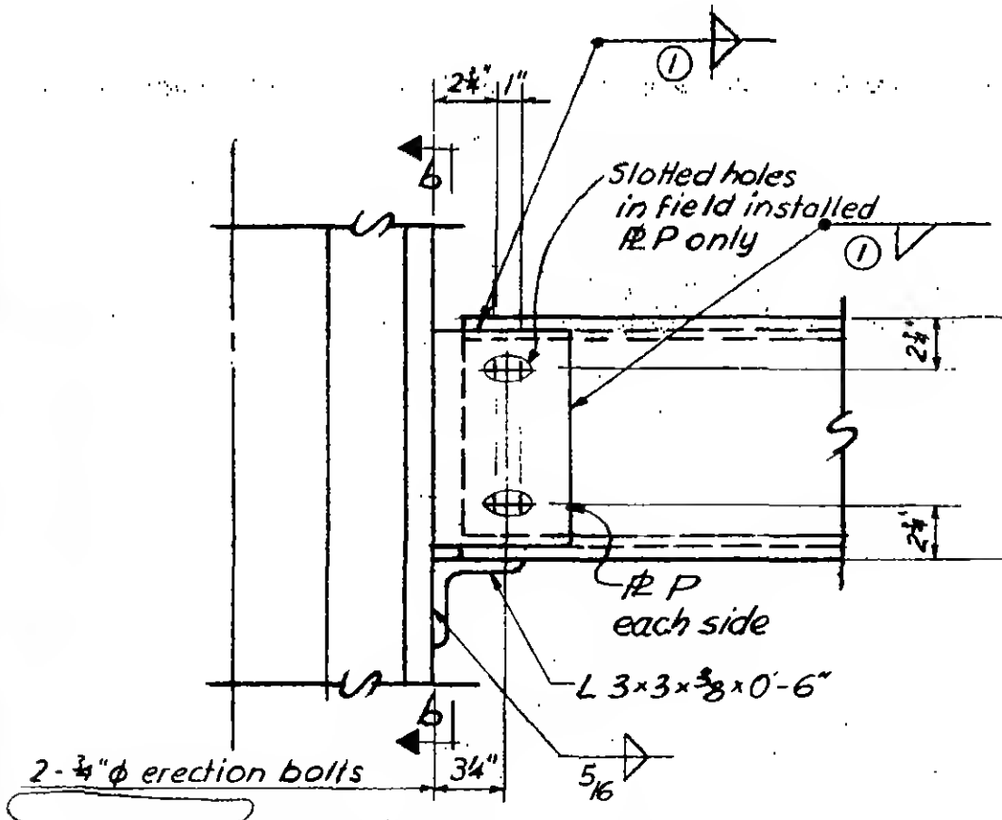

Section a-a

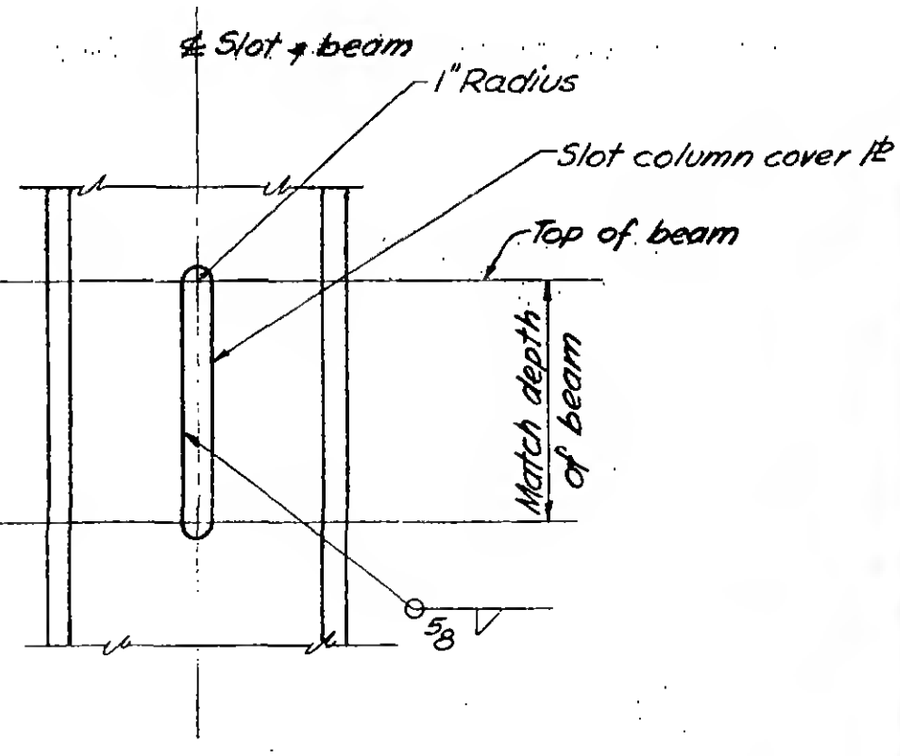

Section b-b

Detail 296 B only

6-ABI-103

SKILLING - HELLE - CHRISTIANSEN - ROBERTSON Structural & Civil Engineers

PROJECT THE WORLD TRADE CENTER | TITLE CONNECTION DETAIL 296 D | DATE 10-5-67

REVISIONS

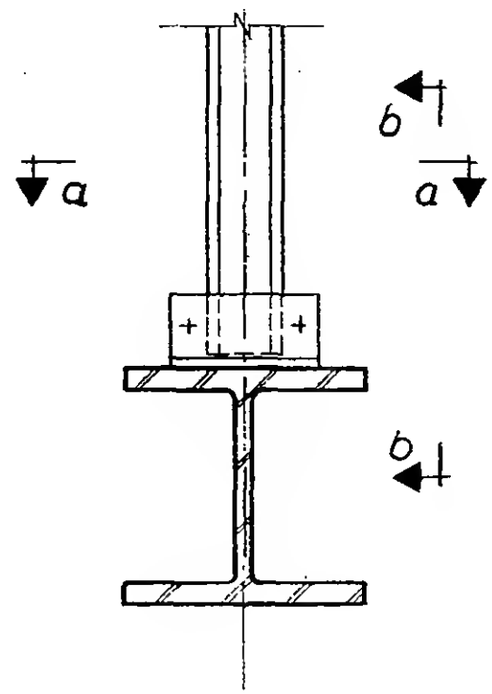

Plan

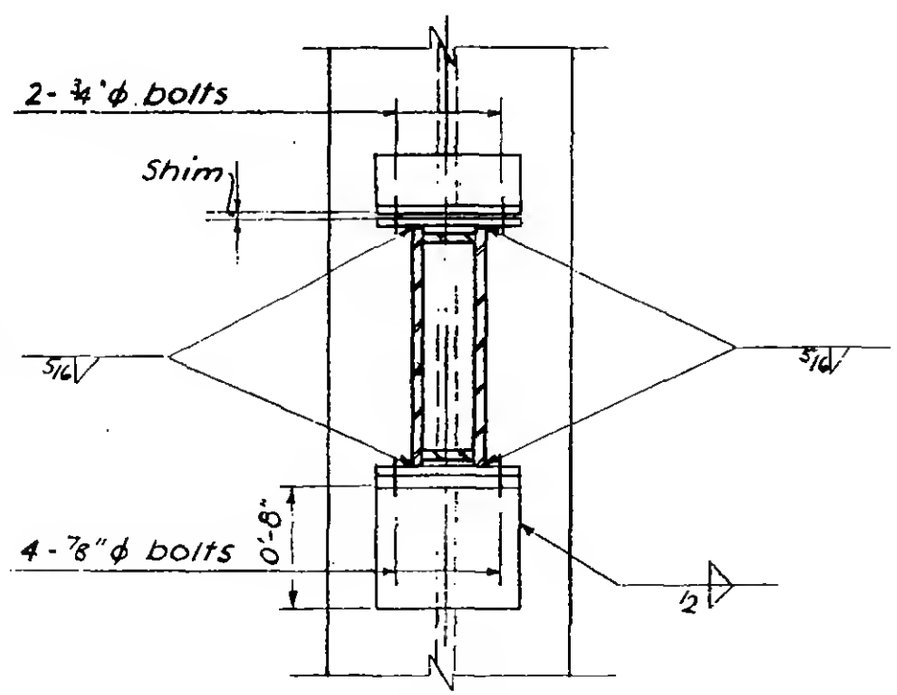

Section a-a

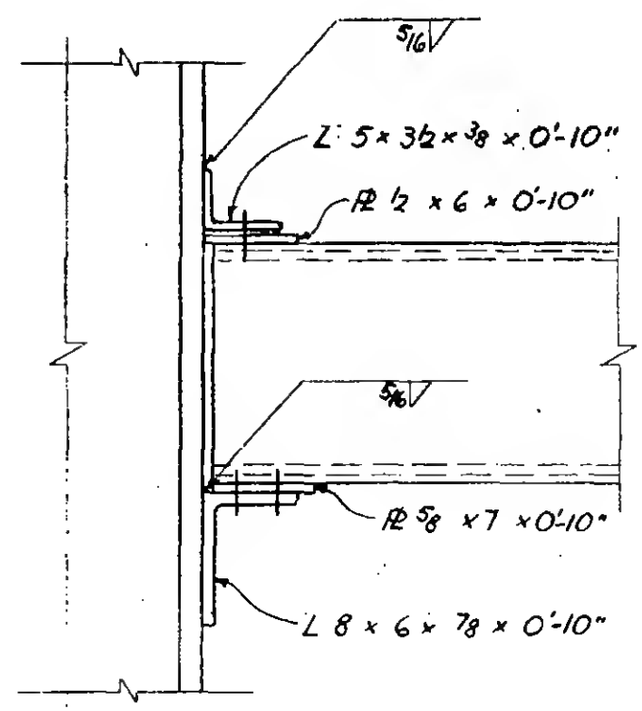

Section b-b

6-AB1-103.1

LICENSED PROFESSIONAL ENGINEER LESLIE E. ROBERTSON No. 34360 UNIVERSITY OF THE STATE OF NEW YORK

SKILLING - HELLE - CHRISTIANSEN - ROBERTSON Structural & Civil Engineers

PROJECT THE WORLD TRADE CENTER | TITLE CONNECTION DETAIL 296 I | DATE 12-21-67

REVISIONS

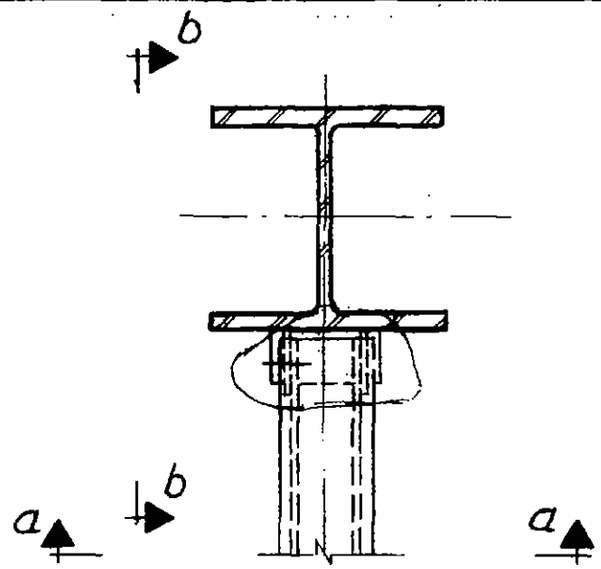

Plan

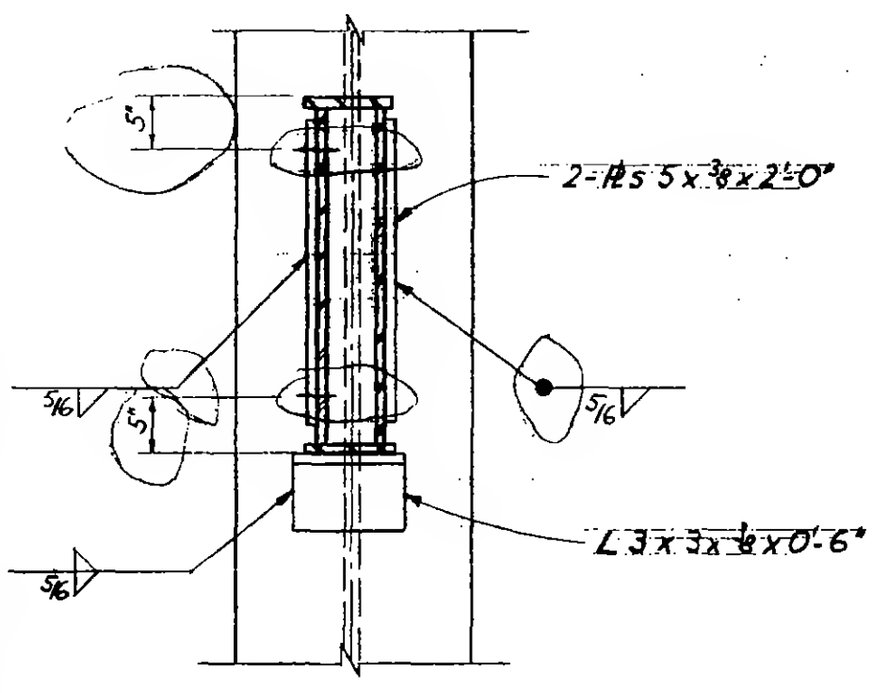

Section a-a

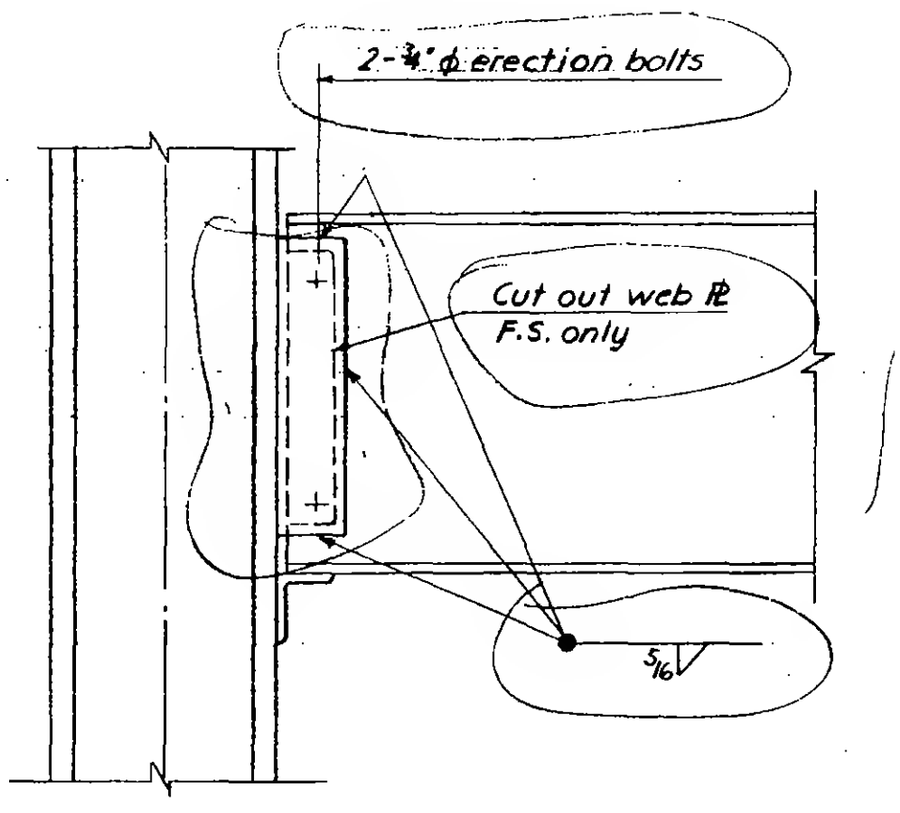

Section b-b

LICENSED PROFESSIONAL ENGINEER LESLIE E. ROBERTSON NO 32050 STATE OF NEW YORK

6-ABI-103.2

WORTHINGTON, SKILLING, HELLE & JACKSON — Civil & Structural Engineers

PROJECT: THE WORLD TRADE CENTER | TITLE: CONNECTION DETAIL 297 | DATE: 7/20/67

REVISIONS

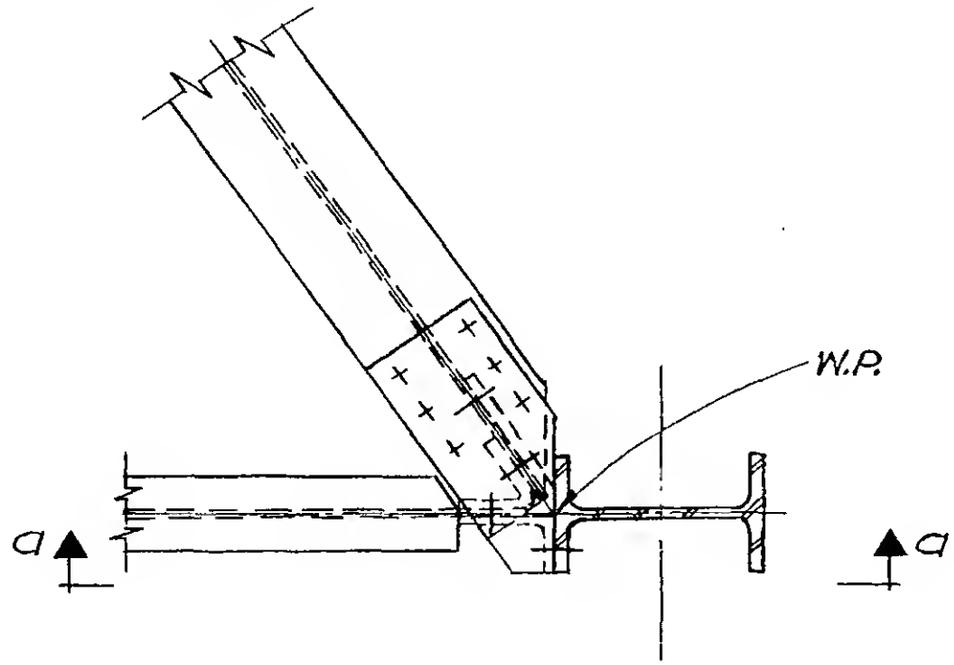

PLAN

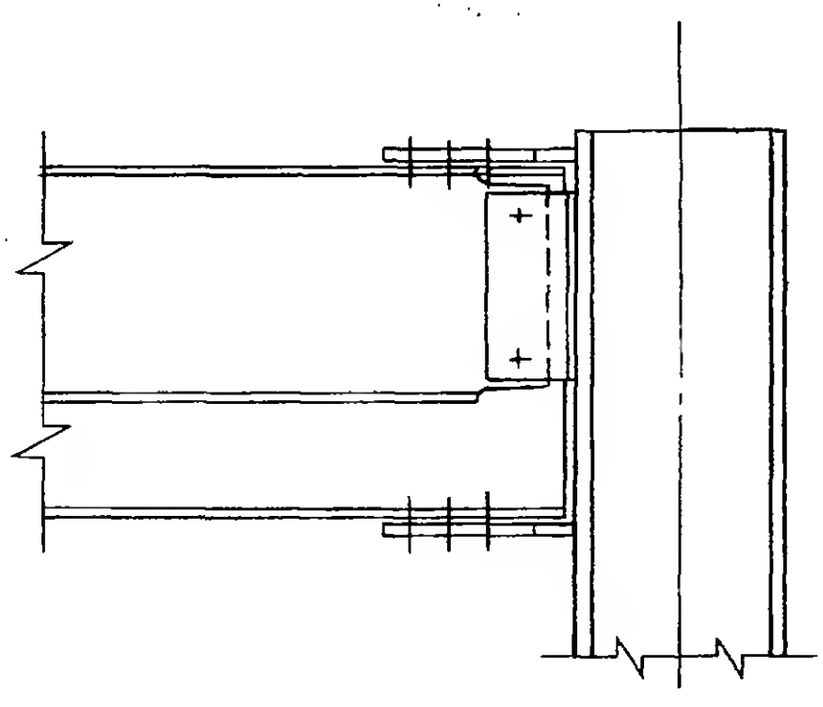

Section a-a

LICENSED PROFESSIONAL ENGINEER
LESLIE E. ROBERTSON
No. 34360
UNIVERSITY OF THE STATE OF NEW YORK

6-AB1-104

WORTHINGTON, SKILLING, HELLE & JACKSON — Civil & Structural Engineers

PROJECT	TITLE	DATE
THE WORLD TRADE CENTER	CONNECTION DETAIL 299	7/20/67

REVISIONS

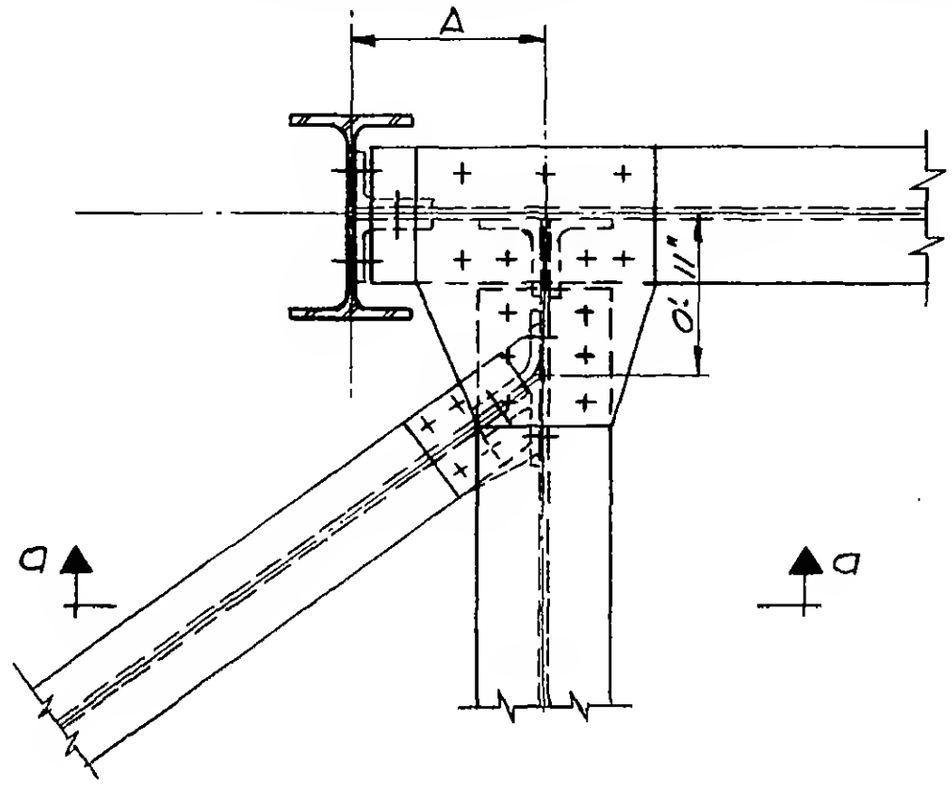

PLAN

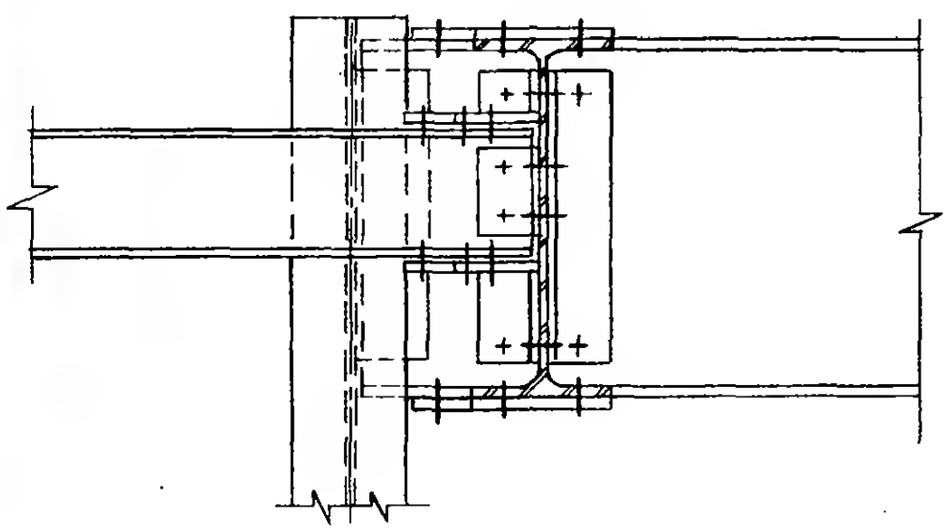

Section a-a

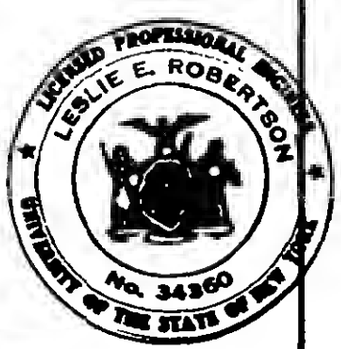

6-AB1-106

WORTHINGTON, SKILLING, HELLE & JACKSON — Civil & Structural Engineers

PROJECT: THE WORLD TRADE CENTER | TITLE: CONNECTION DETAIL 300 | DATE: 7/20/61

REVISIONS

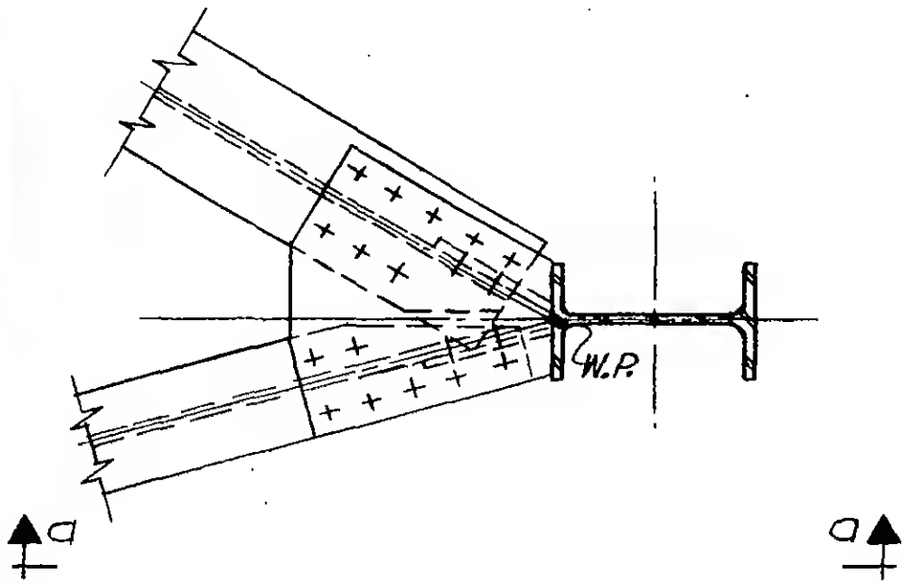

PLAN

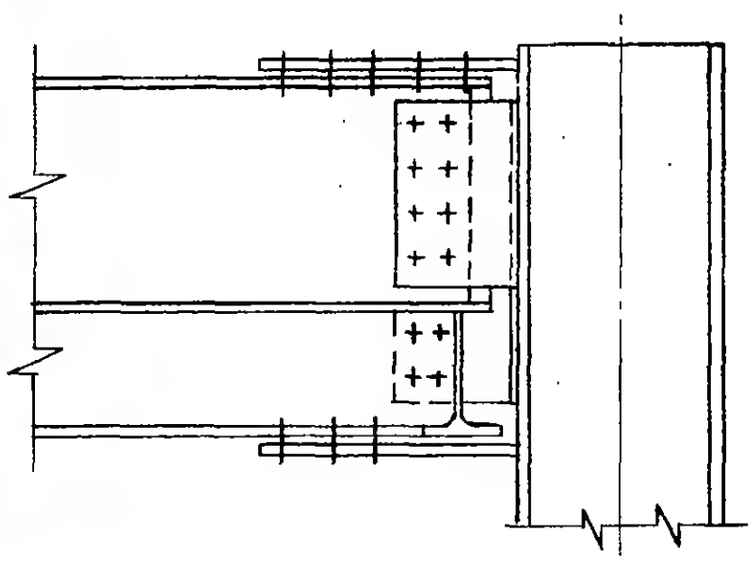

Section a-a

6-AB1-107

SKILLING - HELLE - CHRISTIANSEN - ROBERTSON — Structural & Civil Engineers

PROJECT: THE WORLD TRADE CENTER | TITLE: CONNECTION DETAIL 301 A,B,C | DATE: 6-5-67

REVISIONS

8-14-67

9-15-67

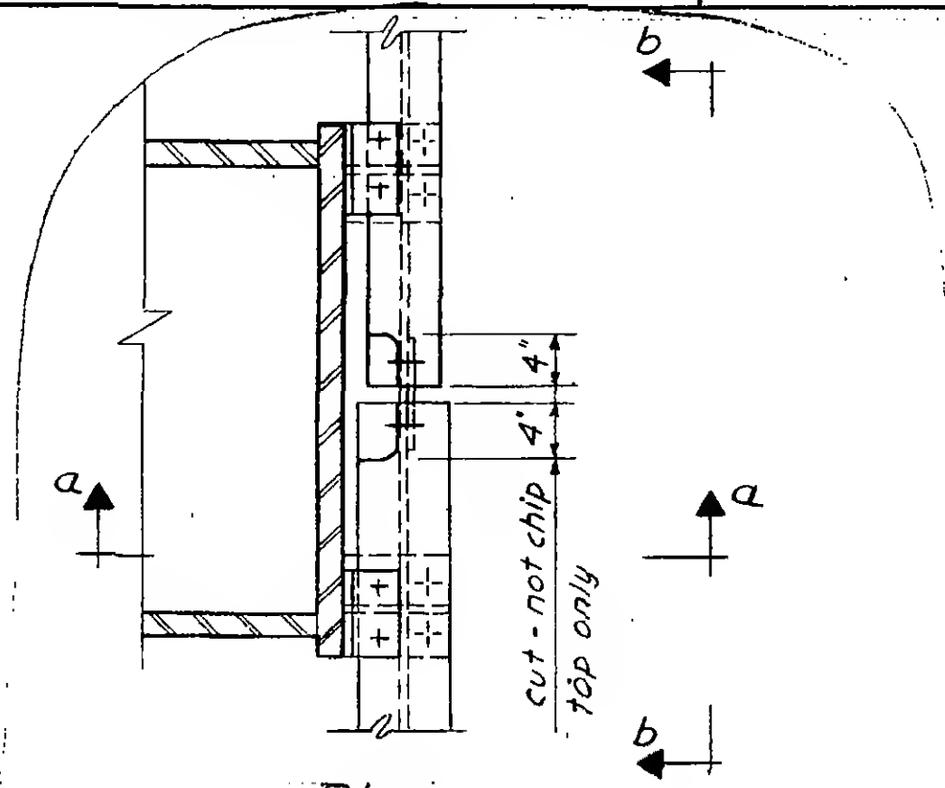

Plan

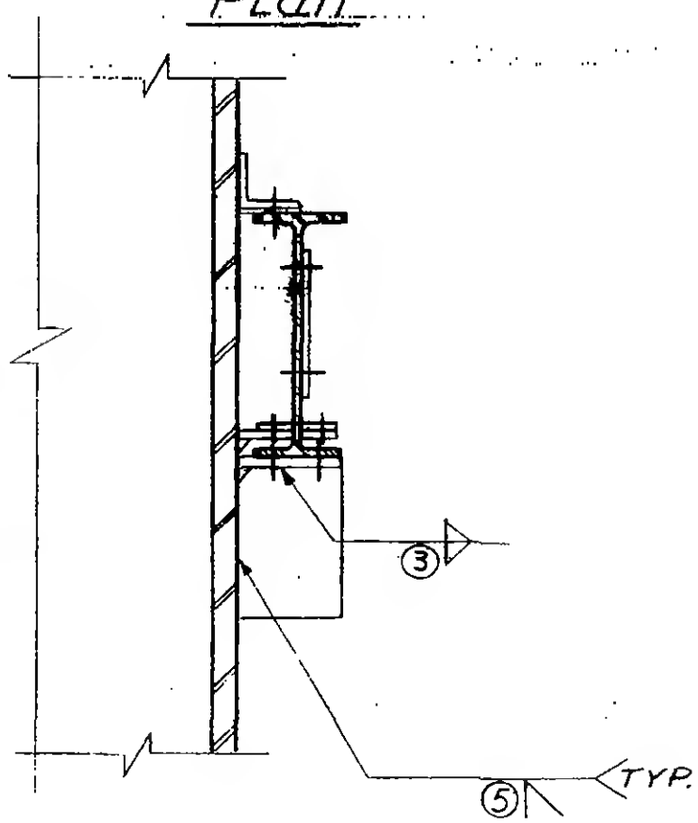

Section a-a

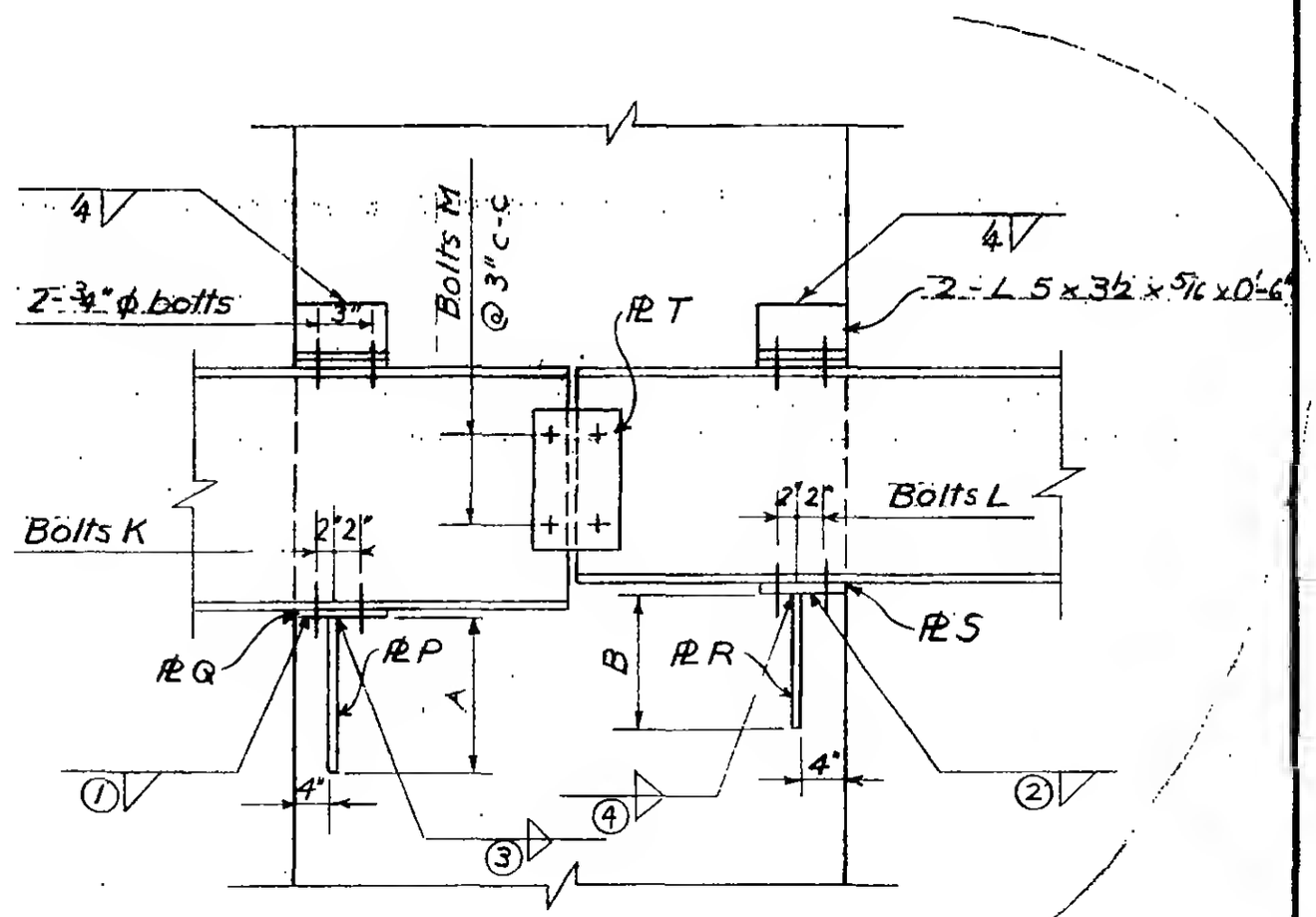

Section b-b

6-AB1-108

SKILLING - HELLE - CHRISTIANSEN - ROBERTSON Structural & Civil Engineers

PROJECT: THE WORLD TRADE CENTER

TITLE: SCHEDULE FOR DETAIL 301 A, B, C

DATE: 8-14-67

REVISIONS

9-15-67

	301 A	301 B,C
PLATES		
P	½"	½"
Q	½"	½"
R	½"	½"
S	½"	½"
T	⅜"	⅜"
DIMENSIONS		
A	1'-0"	1'-0"
B	1'-0"	1'-0"
BOLTS		
K	4 - ¾" φ	4 - ¾" φ
L	4 - ¾" φ	4 - ¾" φ
M	3 - ¾" φ	3'-1" φ
WELDS		
1	½	½
2	½	½
3	5/16	5/16
4	5/16	5/16
5	C.P.	C.P.

LICENSED PROFESSIONAL ENGINEER
LESLIE E. ROBERTSON
No. 34360
UNIVERSITY OF THE STATE OF NEW YORK

6-AB1-108.1

SKILLING - HELLE - CHRISTIANSEN - ROBERTSON Structural & Civil Engineers

PROJECT THE WORLD TRADE CENTER | TITLE CONNECTION DETAIL 301D | DATE 1-24-68

REVISIONS

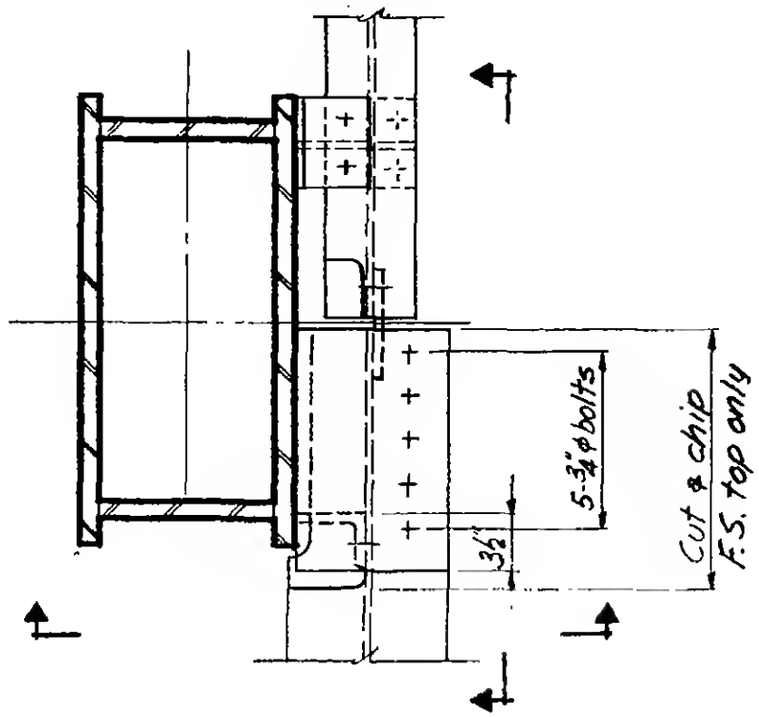

Plan

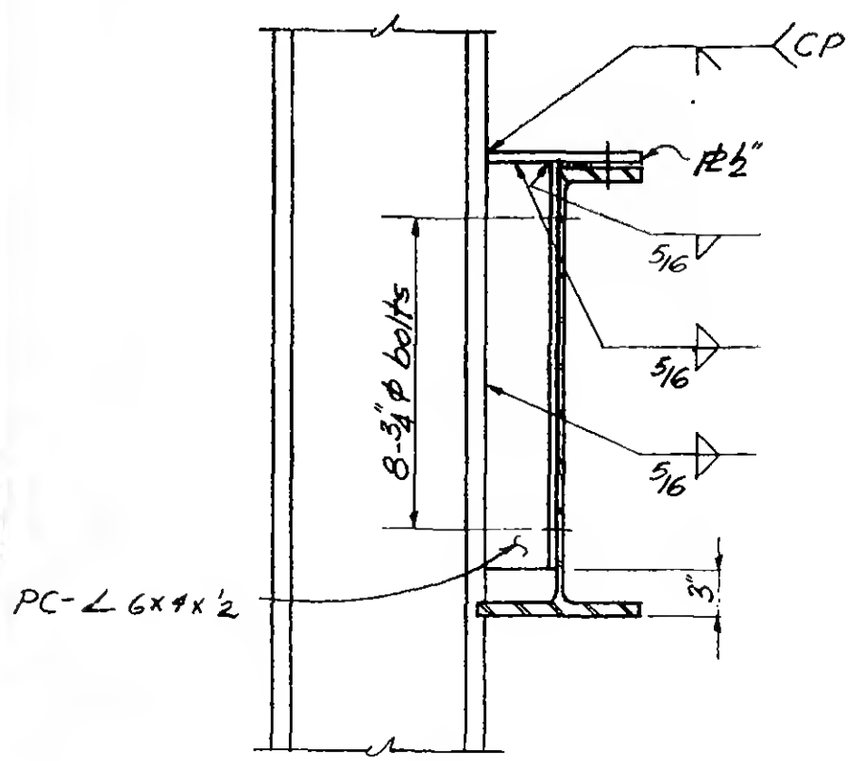

Section a-a

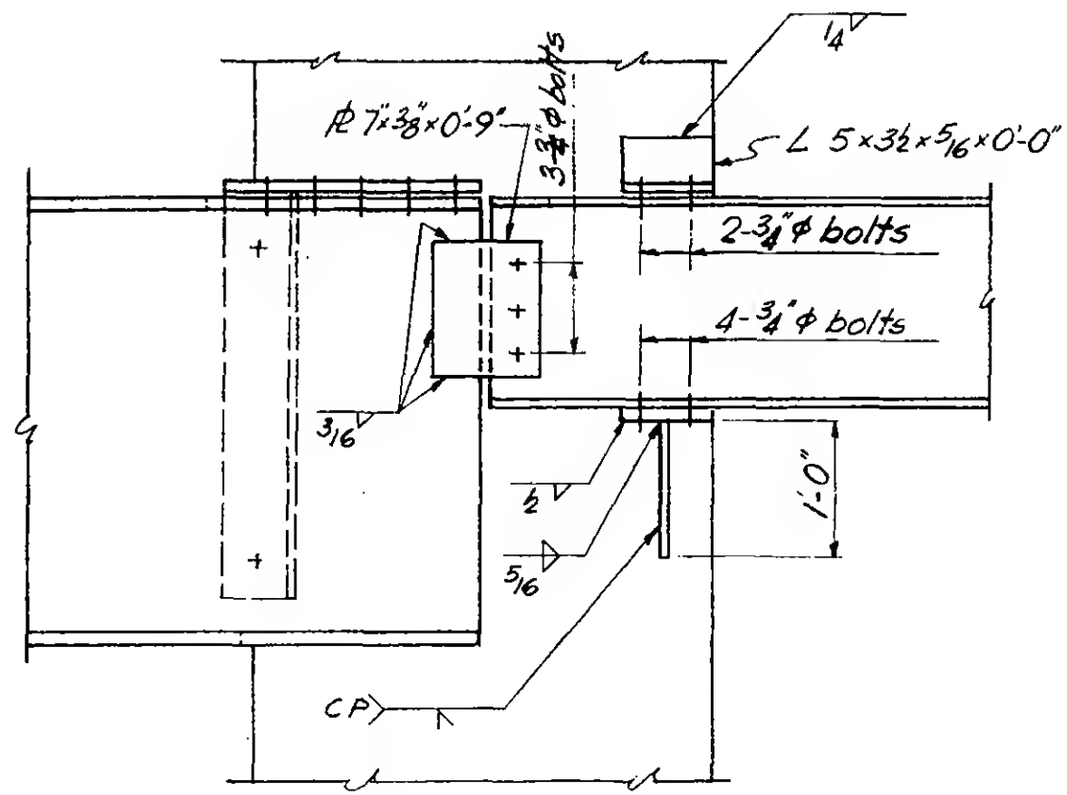

Section b-b

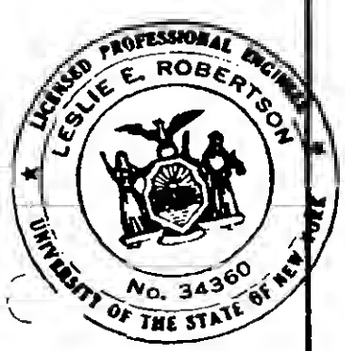

6-AB1-108.2

SKILLING - HELLE - CHRISTIANSEN - ROBERTSON Structural & Civil Engineers

PROJECT: THE WORLD TRADE CENTER | TITLE: CONNECTION DETAIL 302 A | DATE: 6-5-67

REVISIONS

7-20-67
10-5-67

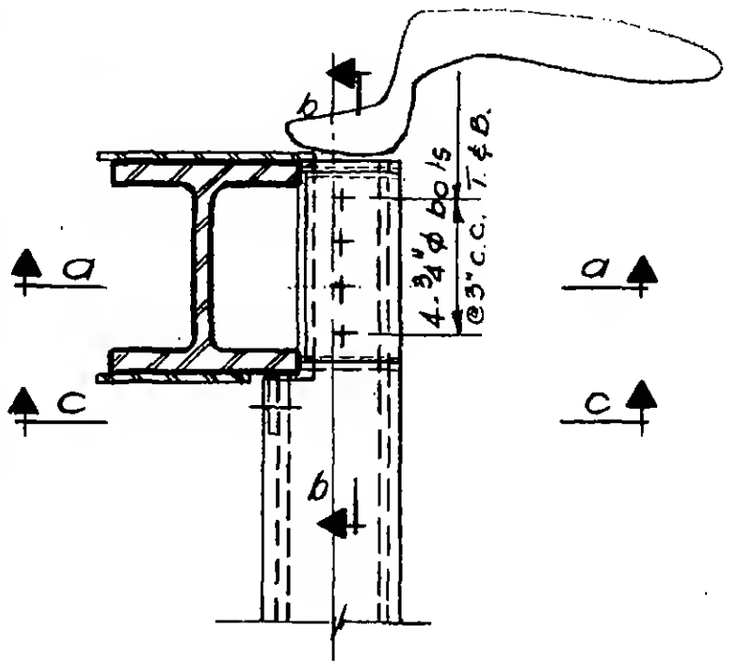

Plan

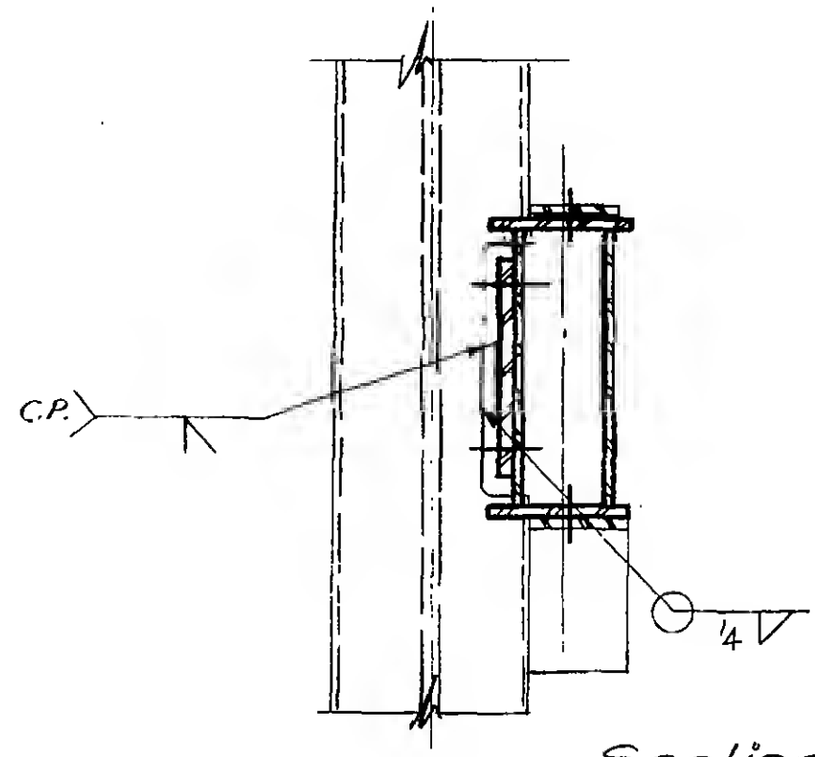

Section c-c

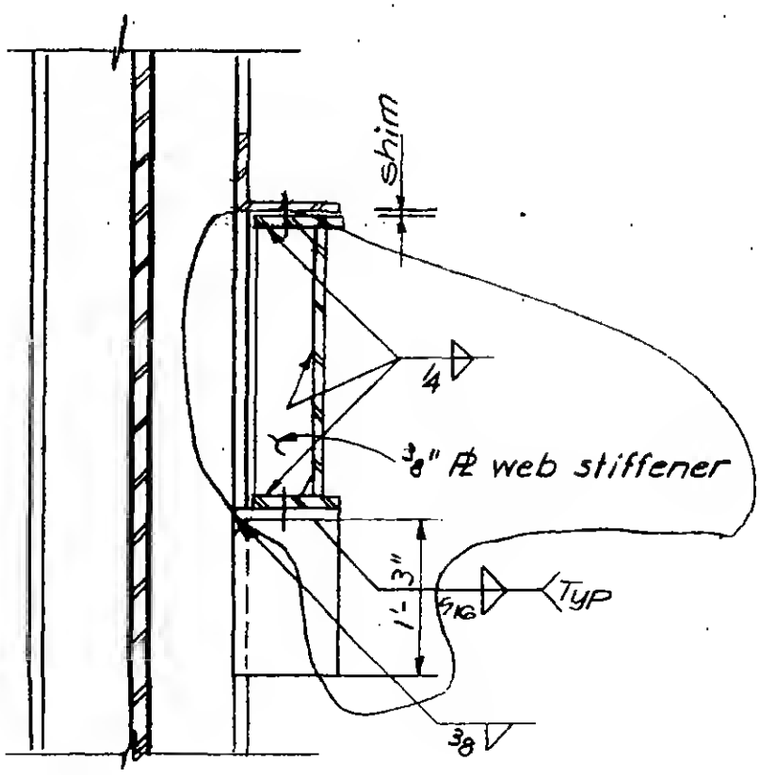

Section a-a.

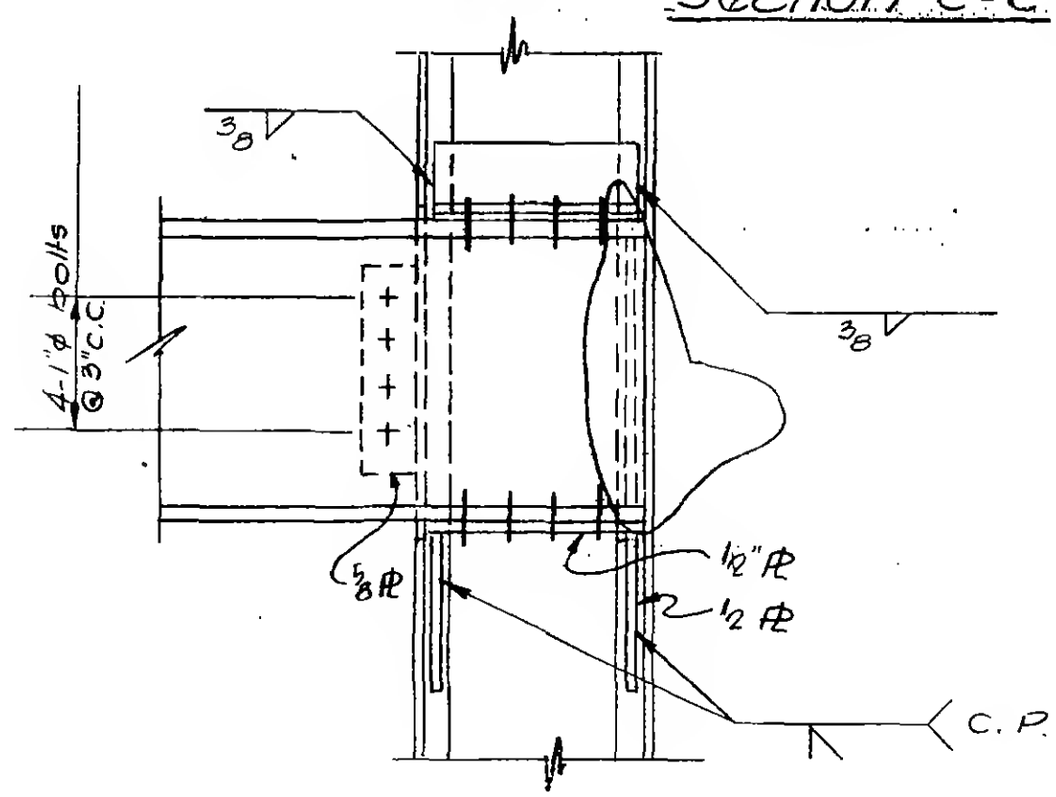

Section b-b

6-AB1-109

WORTHINGTON, SKILLING, HELLE & JACKSON — Civil & Structural Engineers

PROJECT	TITLE	DATE
THE WORLD TRADE CENTER	CONNECTION DETAIL 303 A,B	6-5-67

REVISIONS

7-28-67
9-15-67
11-10-67

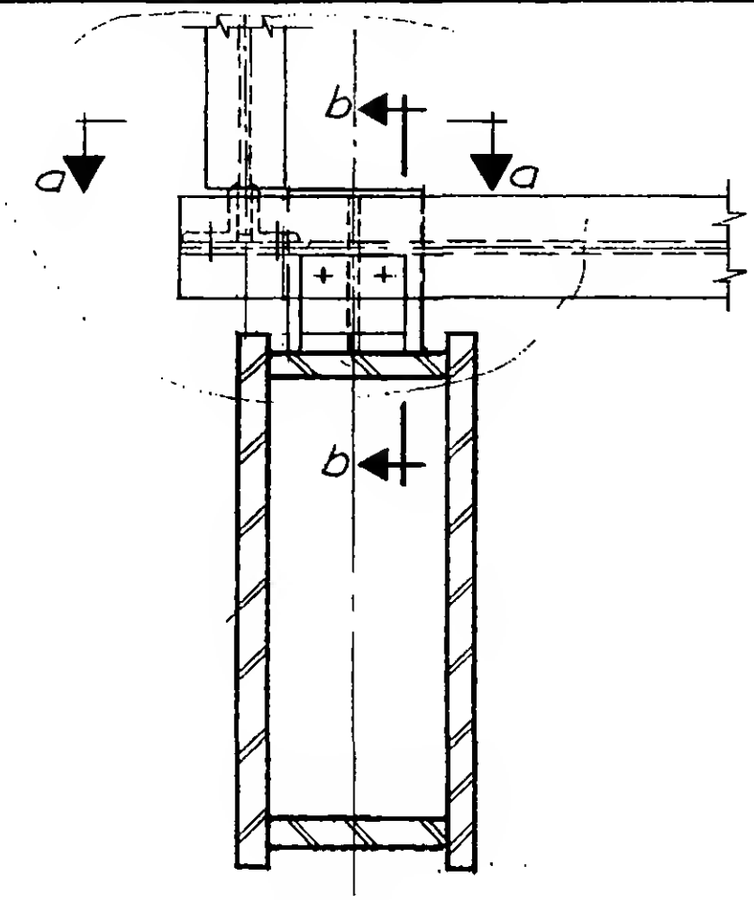

Plan

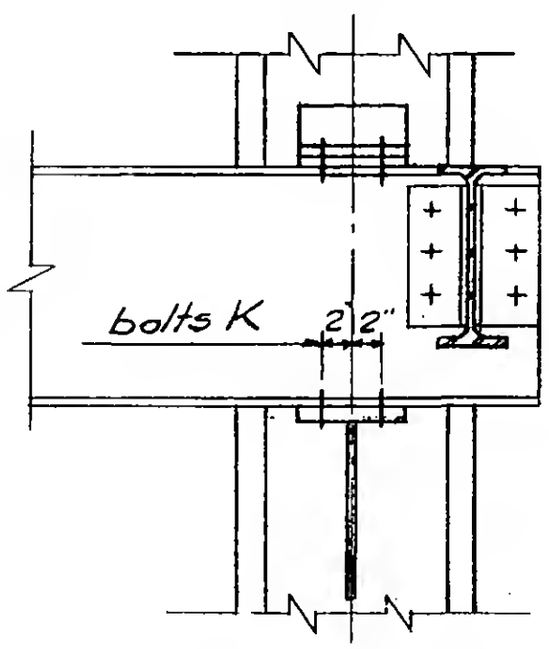

Section a-a

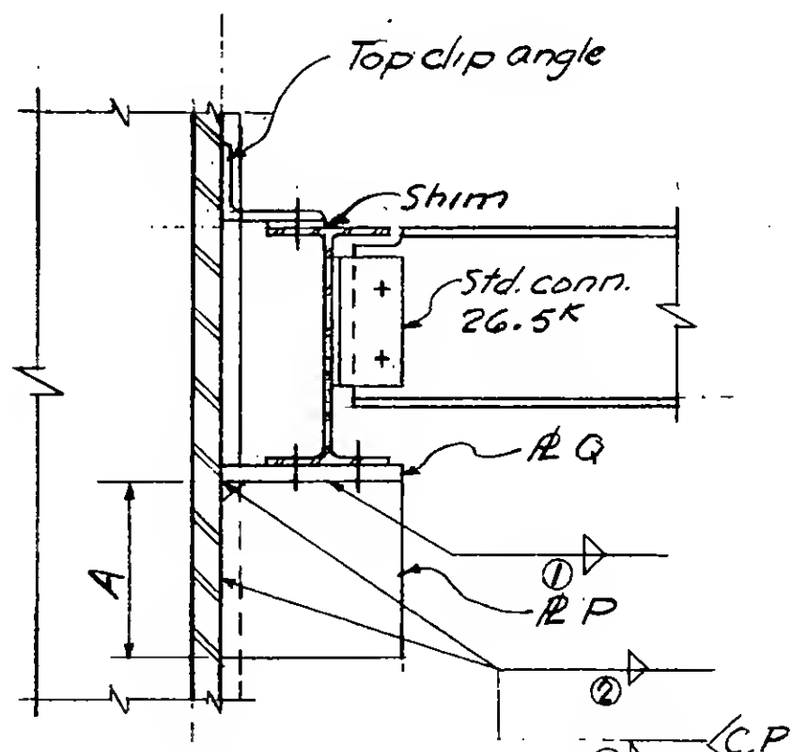

Section b-b

LICENSED PROFESSIONAL ENGINEER
LESLIE E. ROBERTSON
No. 34360
UNIVERSITY OF THE STATE OF NEW YORK

6-AB1-110

WORTHINGTON, SKILLING, HELLE & JACKSON — Civil & Structural Engineers

PROJECT	TITLE	DATE
THE WORLD TRADE CENTER	CONNECTION DETAIL 303 A,B	6-5-67

REVISIONS

-28-67
9-15-67
11-10-67
12-8-67

Use Alt. for beam no. 2186 on Secondary Level above floor 33 Tower A at col. 601

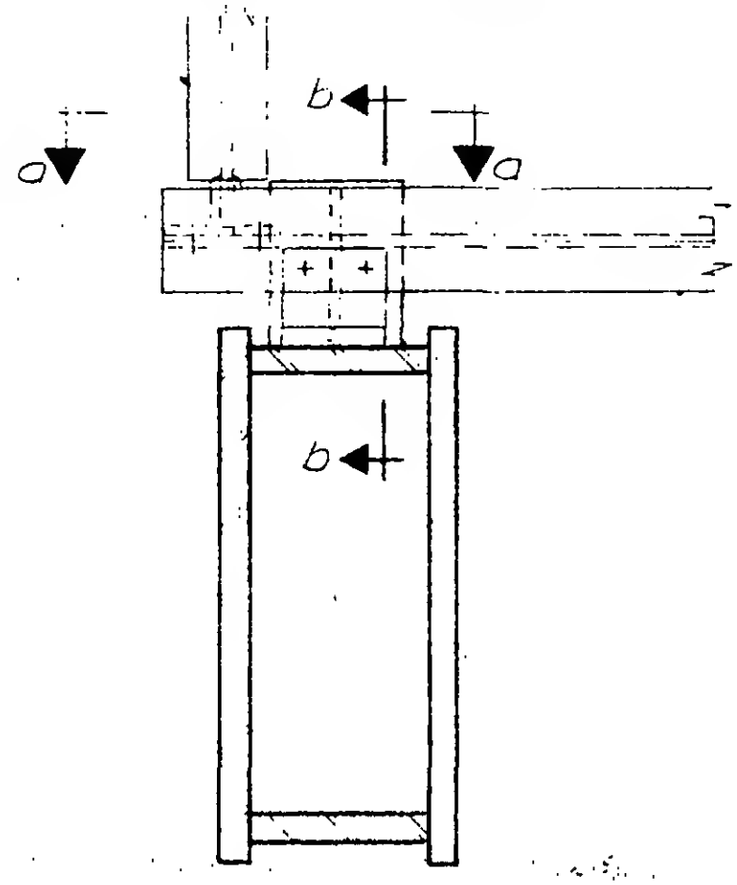

Plan

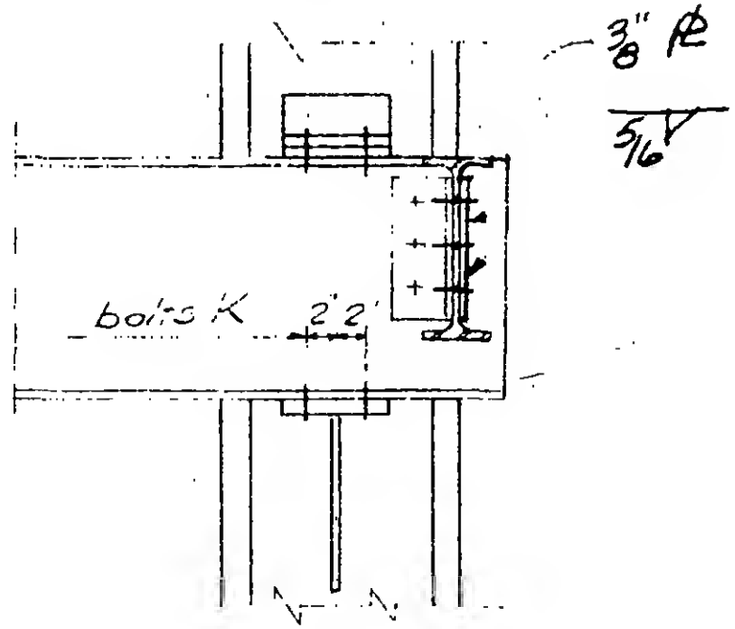

Section a-a

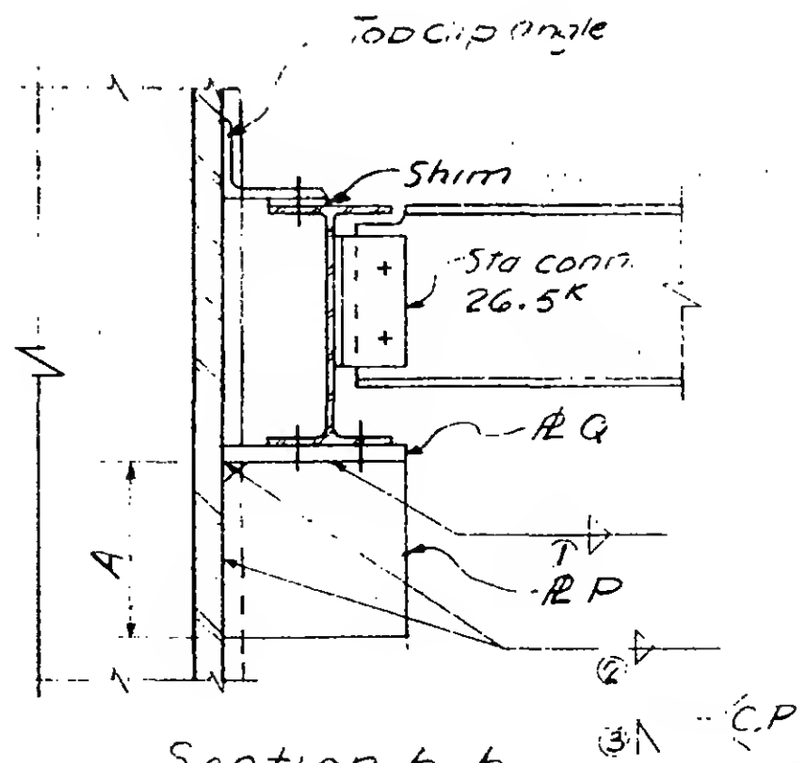

Section b-b

6-AB1-110 Alt.

LICENSED PROFESSIONAL ENGINEER
LESLIE E. ROBERTSON
No. 34360
UNIVERSITY OF THE STATE OF NEW YORK

SKILLING - HELLE - CHRISTIANSEN - ROBERTSON Structural & Civil Engineers

PROJECT THE WORLD TRADE CENTER | TITLE SCHEDULE FOR DETAIL 303 A, B | DATE 9-15-67

REVISIONS

	303A	303B				
PLATES						
P	1/2"	5/8"				
Q	1/2"	5/8"				
DIMENSIONS						
A	1'-0"	1'-0"				
BOLTS						
K	4-3/4"φ	4-3/4"φ				
WELDS						
①	3/8	5/16				
②	3/8	—				
③	—	C.P.				

6-AB1-110.1

SKILLING - HELLE - CHRISTIANSEN - ROBERTSON Structural & Civil Engineers

PROJECT THE WORLD TRADE CENTER | TITLE CONNECTION DETAIL 303 D | DATE 1-24-68

REVISIONS

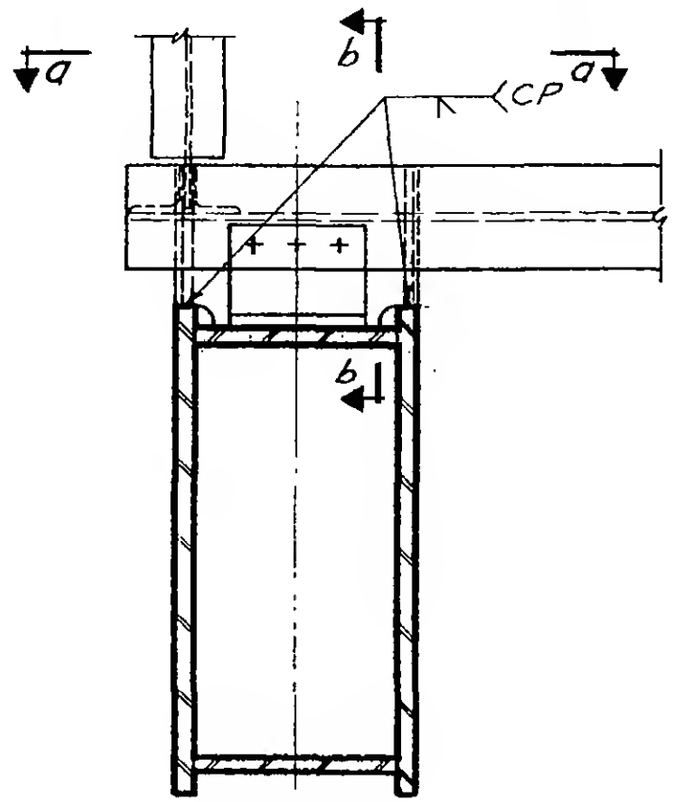

Plan

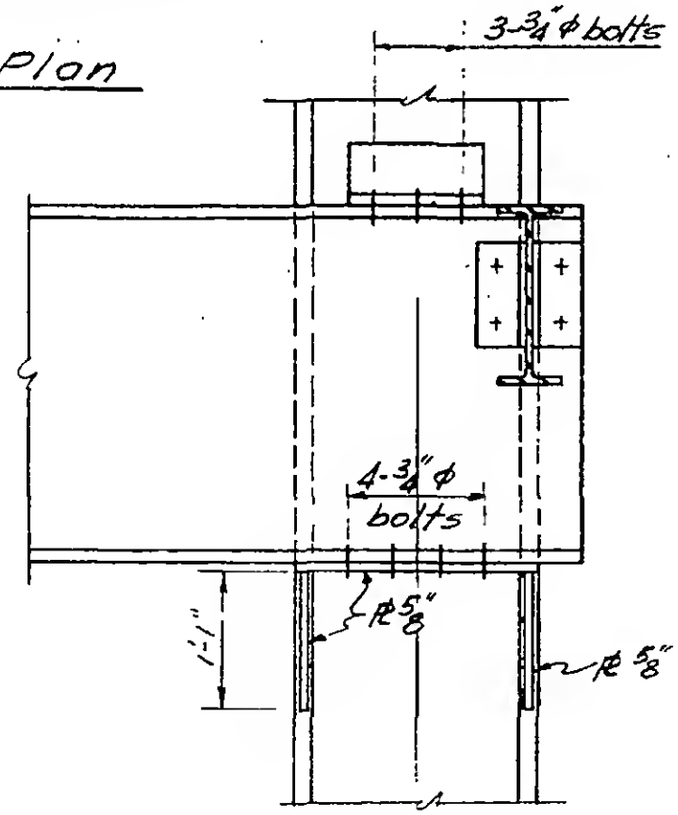

Section a-a

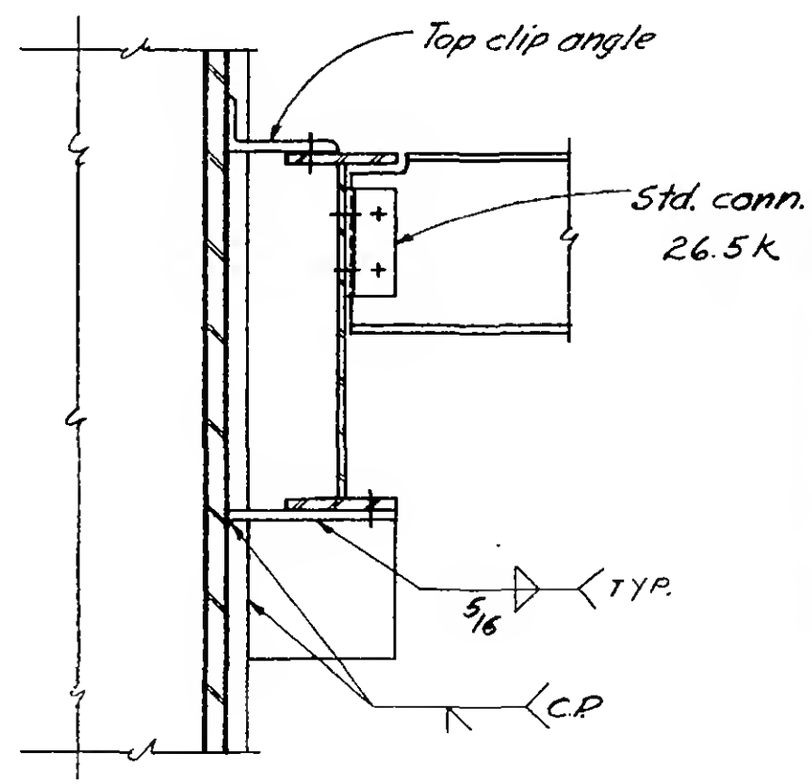

Section b-b

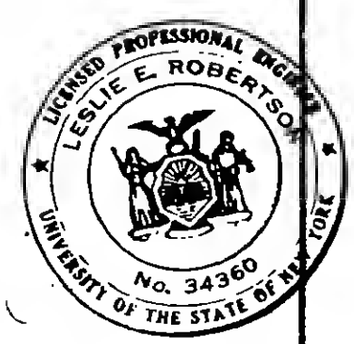

G-AB1-110.2

WORTHINGTON, SKILLING, HELLE & JACKSON — Civil & Structural Engineers

PROJECT: THE WORLD TRADE CENTER | TITLE: CONNECTION DETAIL, 304A | DATE: 6-5-67

REVISIONS
9-15-67
11-10-67
11-14-67

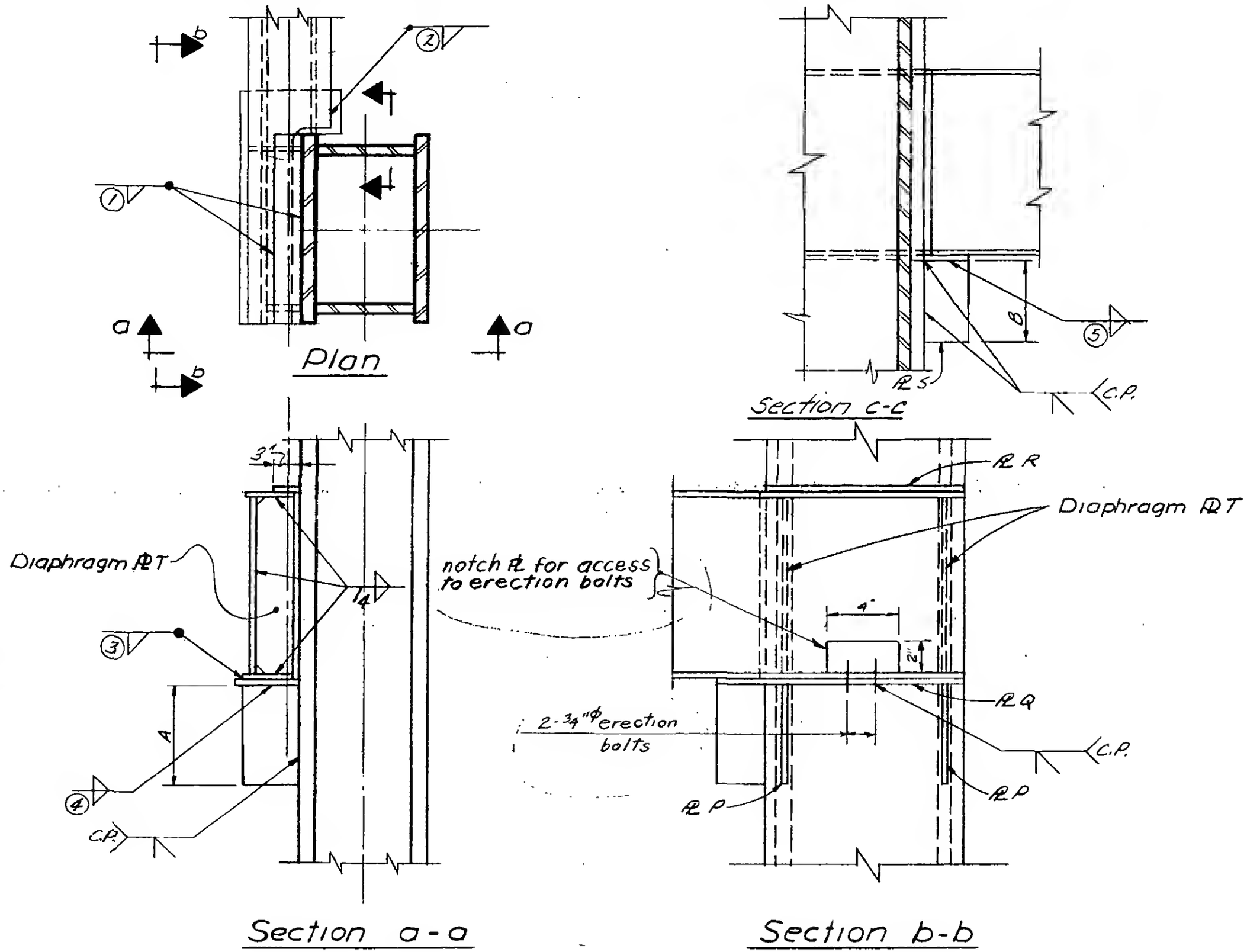

LICENSED PROFESSIONAL ENGINEER
LESLIE E. ROBERTSON
No. 34360
UNIVERSITY OF THE STATE OF NEW YORK

6-AB1-111

SKILLING - HELLE - CHRISTIANSEN - ROBERTSON Structural & Civil Engineers

PROJECT THE WORLD TRADE CENTER | TITLE SCHEDULE FOR DETAIL 304A | DATE 9-15-67

REVISIONS

11-10-67

	304A					
PLATE						
P	1/2"					
Q	1/2"					
R	3/8"					
S	5"x5/8"					
T	3/8					
DIMENSION						
A	0'-10"					
B	0'-10"					
WELD						
1	5/16					
2	5/16					
3	5/16					
4	5/16					
5	5/16					

6-AB1-111.1

WORTHINGTON, SKILLING, HELLE & JACKSON — Civil & Structural Engineers

PROJECT: WORLD TRADE CENTER | TITLE: CONNECTION DETAIL 305 | DATE: 7/20/67

REVISIONS

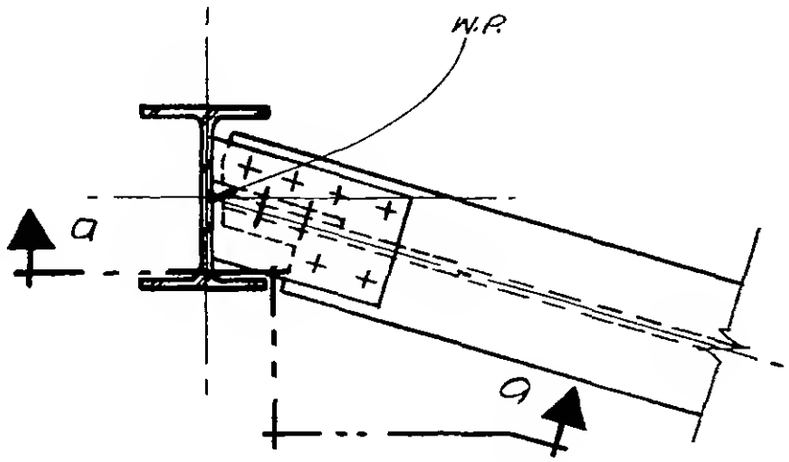

PLAN

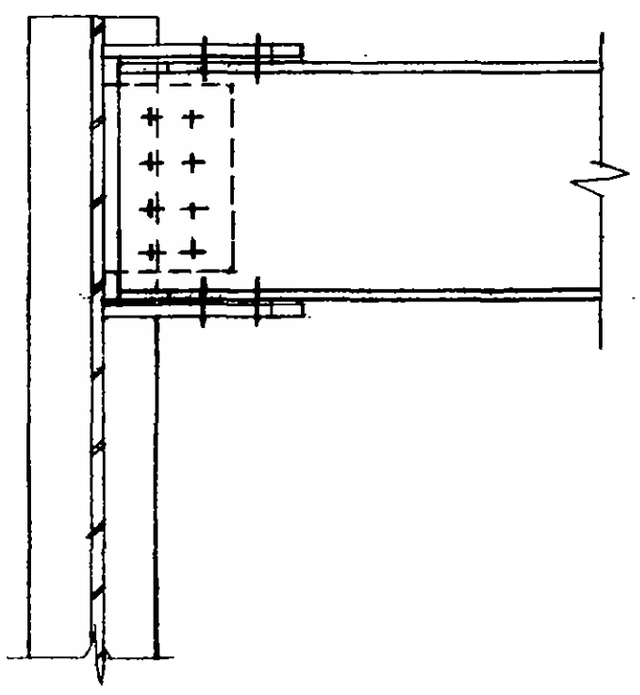

SECTION: a-a

LICENSED PROFESSIONAL ENGINEER
LESLIE E. ROBERTSON
No. 34360
UNIVERSITY OF THE STATE OF NEW YORK

6-AB1-112

SKILLING - HELLE - CHRISTIANSEN - ROBERTSON Structural & Civil Engineers

PROJECT THE WORLD TRADE CENTER | TITLE CONNECTION DETAIL 306 A,B,C | DATE 6-5-67

REVISIONS

9-15-67
10-2-67
11-10-67

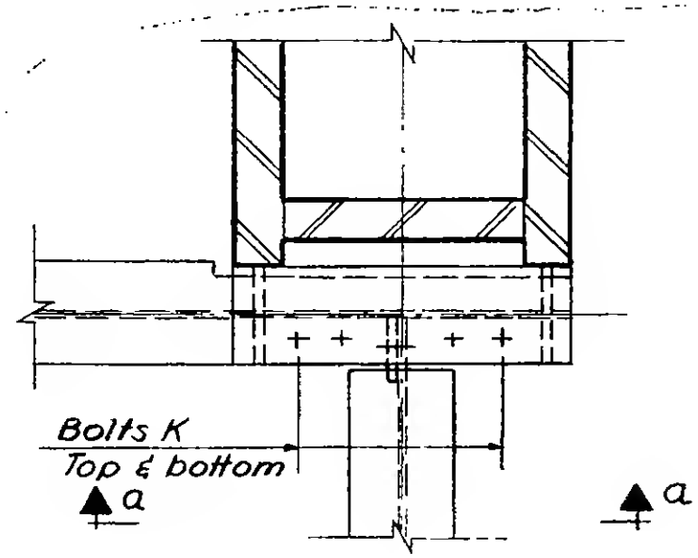

Plan
Detail 306 A

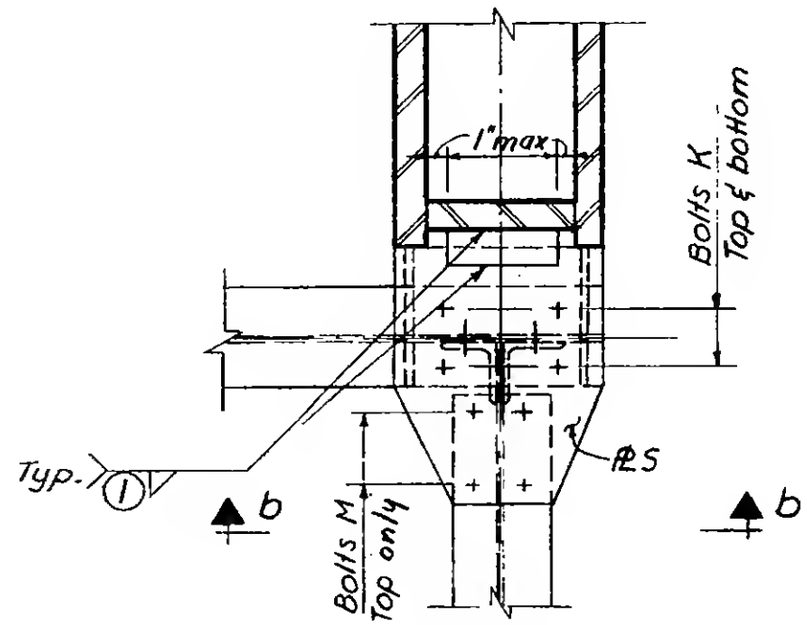

Plan
Detail 306 B & C

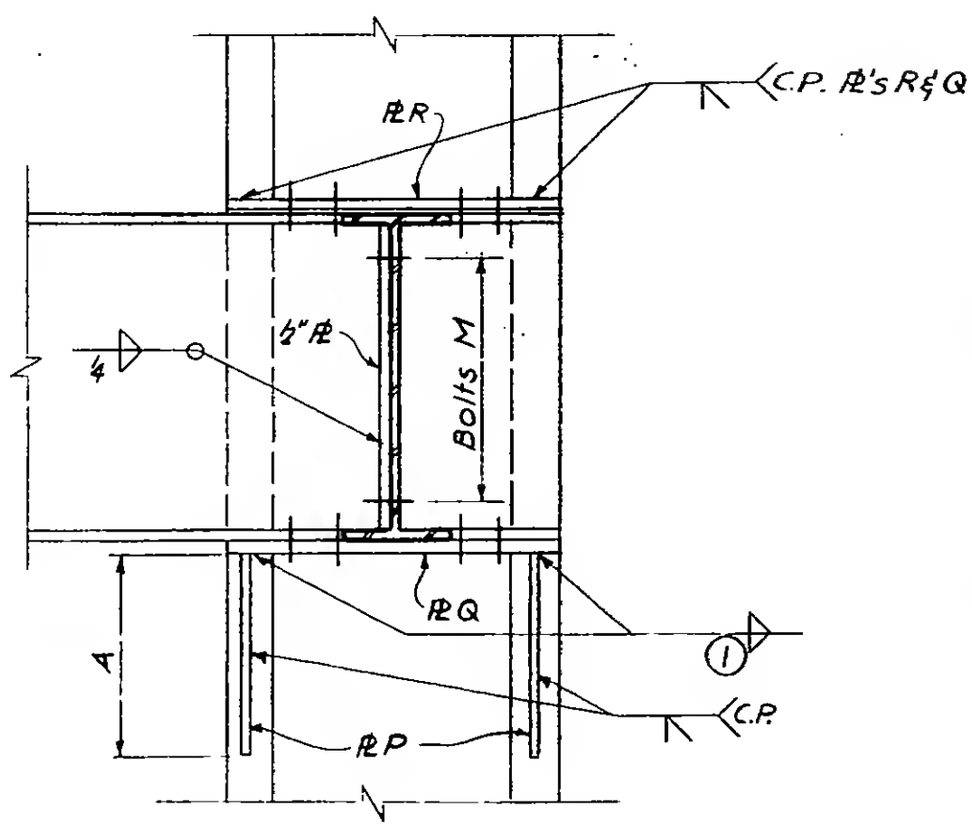

Section a-a

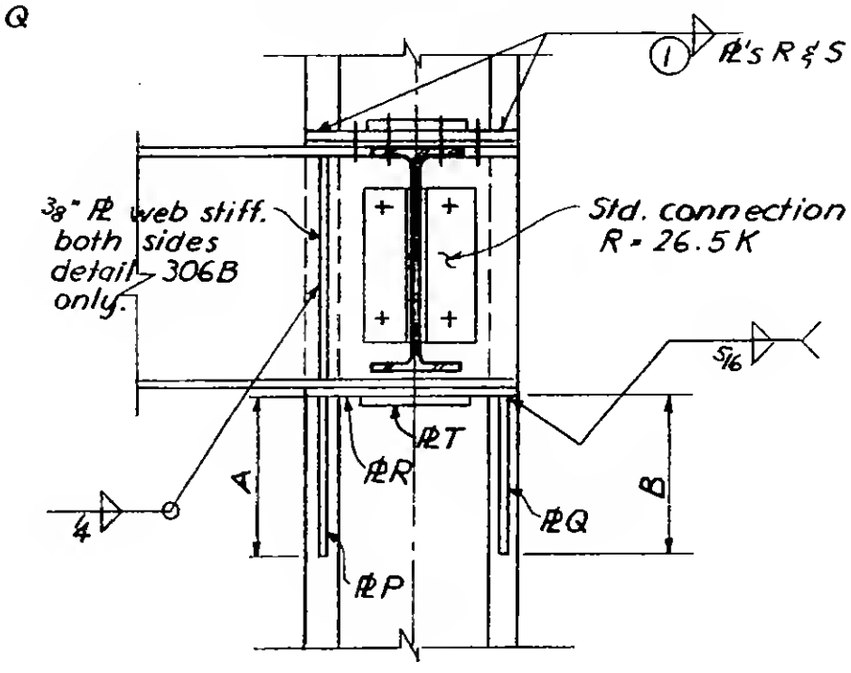

Section b-b

6-ABI-113

SKILLING - HELLE - CHRISTIANSEN - ROBERTSON Structural & Civil Engineers

PROJECT: THE WORLD TRADE CENTER | TITLE: SCHEDULE FOR DETAIL 306 A, B, C, D | DATE: 9-15-67

REVISIONS
10-2-67
10-31-67
11-10-67

REF. DWG.	6-ABI-113	6-ABI-113	6-ABI-113	6-ABI-113.2		
	306 A	306 B	306 C	306 D		
PLATES				See dwg.		
P	3/4"	3/4"	1/2"			
Q	3/4"	—	1/2"			
R	1/2"	3/4"	1/2"			
S	—	1/2"	1/2"			
T	—	3/8"	3/8"			
DIMENSIONS						
A	1'-0"	1'-2"	1'-0"			
B	—	—	1'-0"			
BOLTS						
K	4 - 7/8" ϕ	4 - 3/4" ϕ	4 - 3/4" ϕ			
L	—	—	—			
M	8 - 3/4" ϕ	4 - 7/8" ϕ	4 - 7/8" ϕ			
WELDS						
1	5/16	1/4	1/4			

6-ABI-113.1

SKILLING - HELLE - CHRISTIANSEN - ROBERTSON Structural & Civil Engineers

PROJECT	TITLE	DATE
THE WORLD TRADE CENTER	CONNECTION DETAIL 306D	11-10-67

REVISIONS

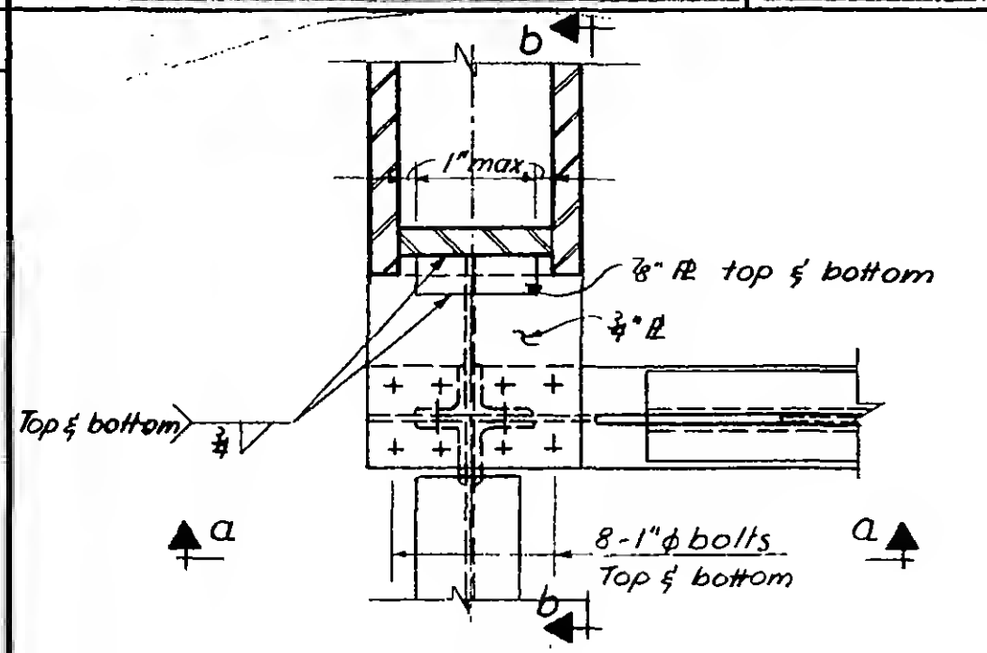

Plan

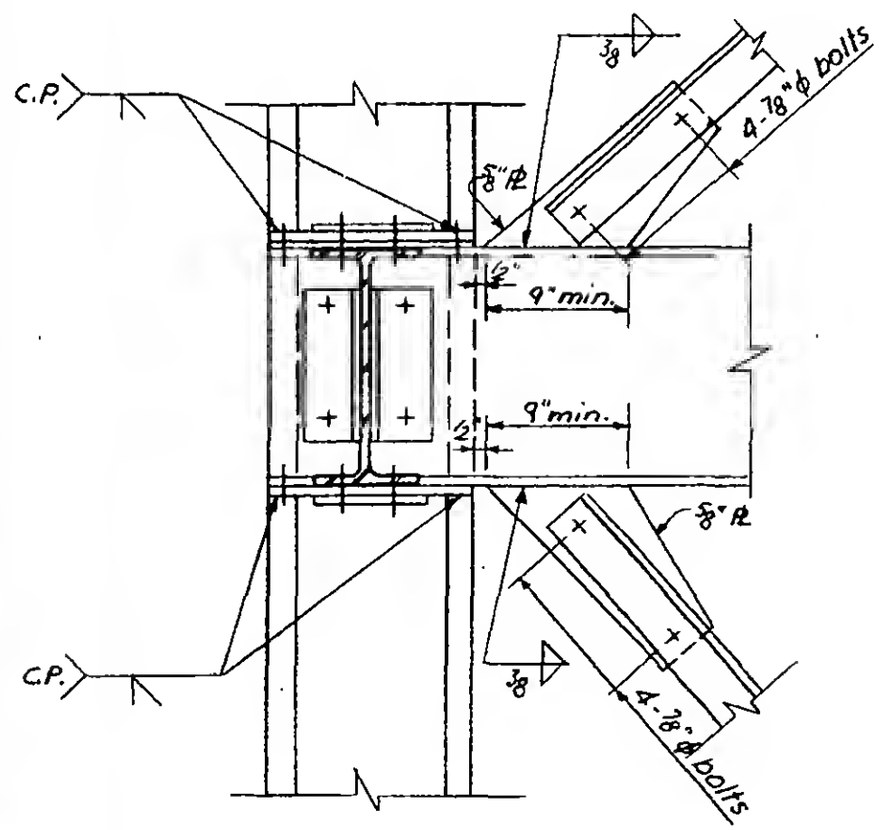

Section a-a

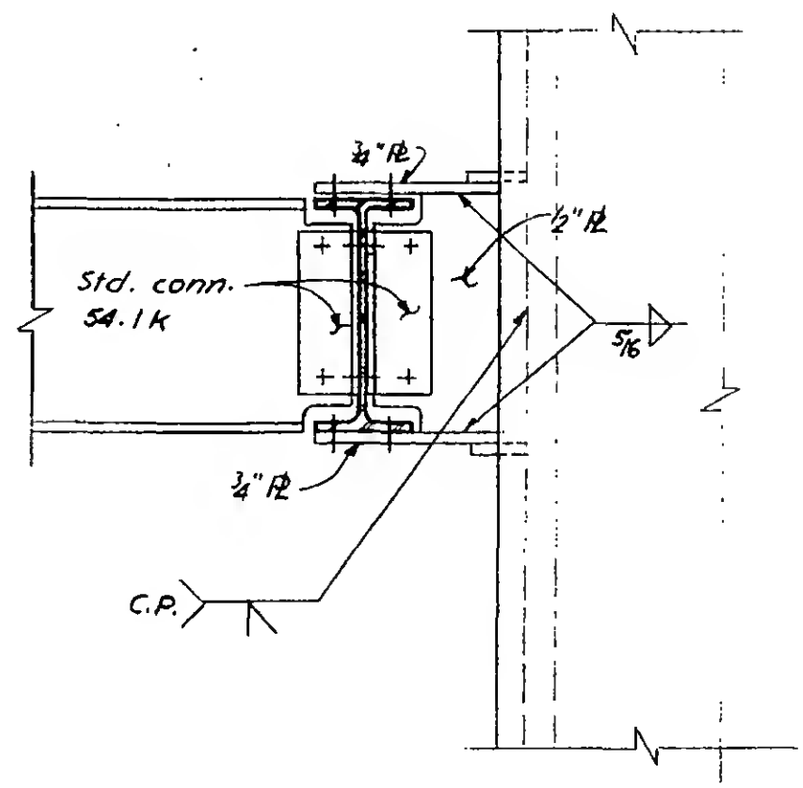

Section b-b

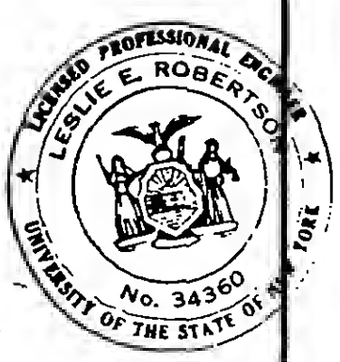

6-ABI-113.2

WORTHINGTON, SKILLING, HELLE & JACKSON — Civil & Structural Engineers

PROJECT	TITLE	DATE
THE WORLD TRADE CENTER	CONNECTION DETAIL 307 A,B	5-9-67

REVISIONS

7-5-67
7-28-67

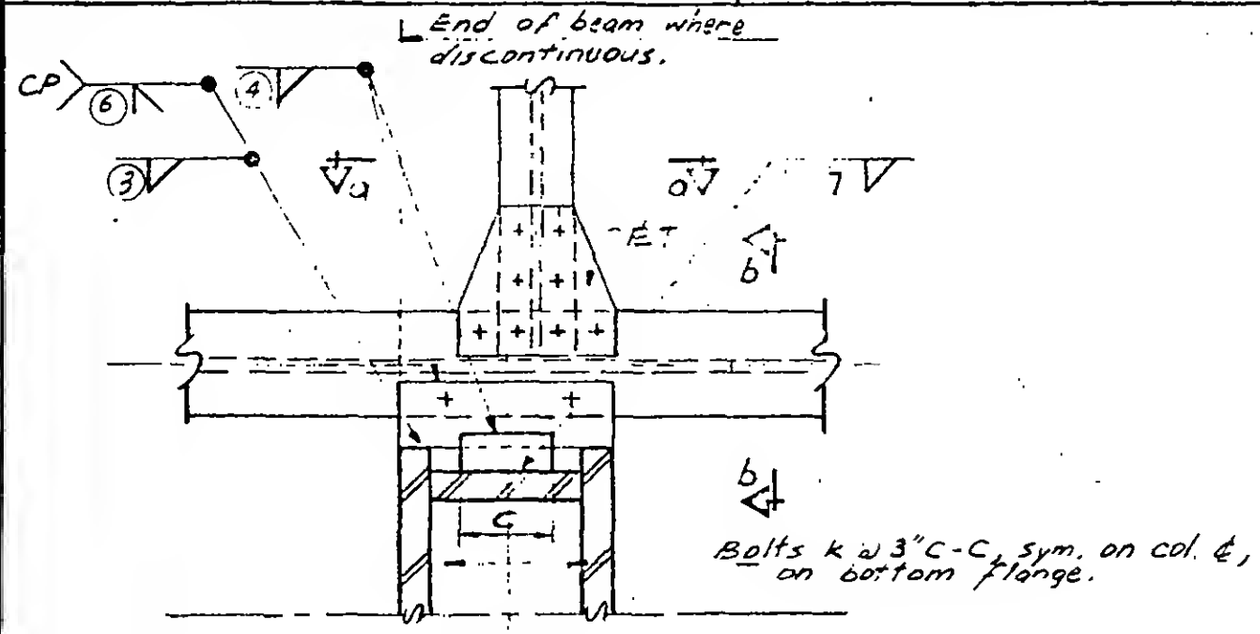

Plan

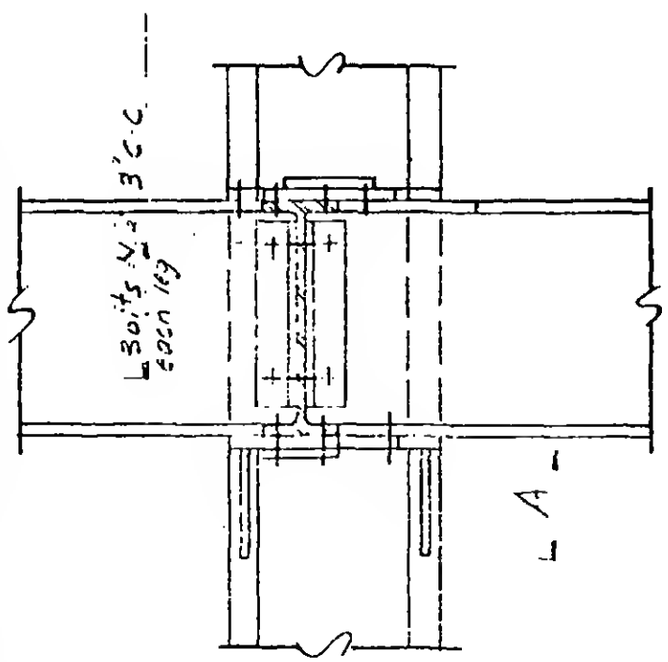

Section a-a

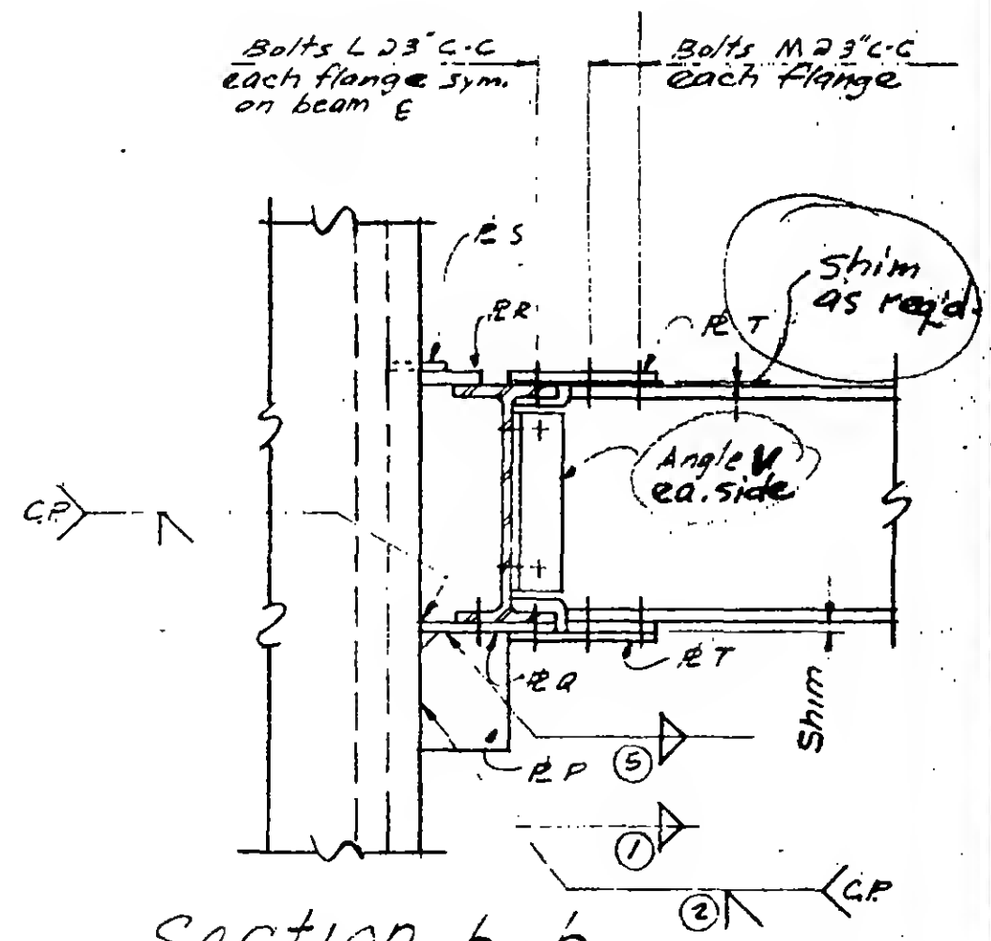

Section b-b

6-AB1-114

WORTHINGTON, SKILLING, HELLE & JACKSON — Civil & Structural Engineers

PROJECT: THE WORLD TRADE CENTER | TITLE: SCHEDULE FOR DETAIL 307 A-G | DATE: 7-25-67

REVISIONS
-28-67
8-5-67

REF. DWG.	G-AB1-114	G-AB1-114	G-AB1-114.2	G-AB1-114.2	G-AB1-114.2	G-AB1-114.2
	307 A	307 B	307 C	307 D	307 E	307 F, G
PLATES						
P	3/4"	2 1/4" x 1/2"	5/8"	5/8"	5/8"	1/2"
Q	3/4	7" x 1"	5/8"	5/8"	5/8"	1"
R	5/16	1 1/2" x 5/8"	5/16"	5/16"	5/16"	1"
S	—	2 1/4" x 3/8"	5/16	5/16"	—	—
T	—	3/8"	—	—	—	—
U	—	—	5/16"	5/16"	—	—
ANGLES						
V	4 x 3 1/2 x 5/16 x 0'-9"	4 x 3 1/2 x 5/16 x 0'-9"	4 x 3 1/2 x 5/16	4 x 3 1/2 x 5/16	4 x 3 1/2 x 5/16	4 x 3 1/2 x 5/16
DIMENSIONS						
A	1'-0"	1'-4"	1'-2"	1'-2"	1'-4"	1'-2
C	—	0'-8"	—	—	—	—
BOLTS						
K	4-3/4"φ(A325)	—	—	—	—	—
L	—	6-1 1/8"φ(A325)	8-3/4"φ	8-3/4"φ	2-3/4"φ	12-1"φ
M	—	6-1 1/8"φ(A325)	4-7/8"φ	4-7/8"φ	—	4-7/8"φ
N	3-3/4"φ(A325)	3-3/4"φ(A325)	3-3/4"φ	3-3/4"φ	3-3/4"φ	3-3/4"φ
WELDS						
①	—	—	5/16	5/16	—	—
②	C.P.	C.P.	5/16	5/16	—	—
③	—	3/8	5/16	5/16	—	—
④	5/16	—	5/16	5/16	5/16	5/16
⑤	5/16	3/8	5/16	5/16	—	—
⑥	C.P.	C.P	—	—	—	—
⑦	1/2	1/2	—	—	—	—

G-AB1-114.1

WORTHINGTON, SKILLING, HELLE & JACKSON • Civil & Structural Engineers

PROJECT: THE WORLD TRADE CENTER | TITLE: CONNECTION DETAIL 307 C, D, E, F, G, H & I | DATE: 7-28-67

REVISIONS
8-5-67
9-15-67
11-10-67

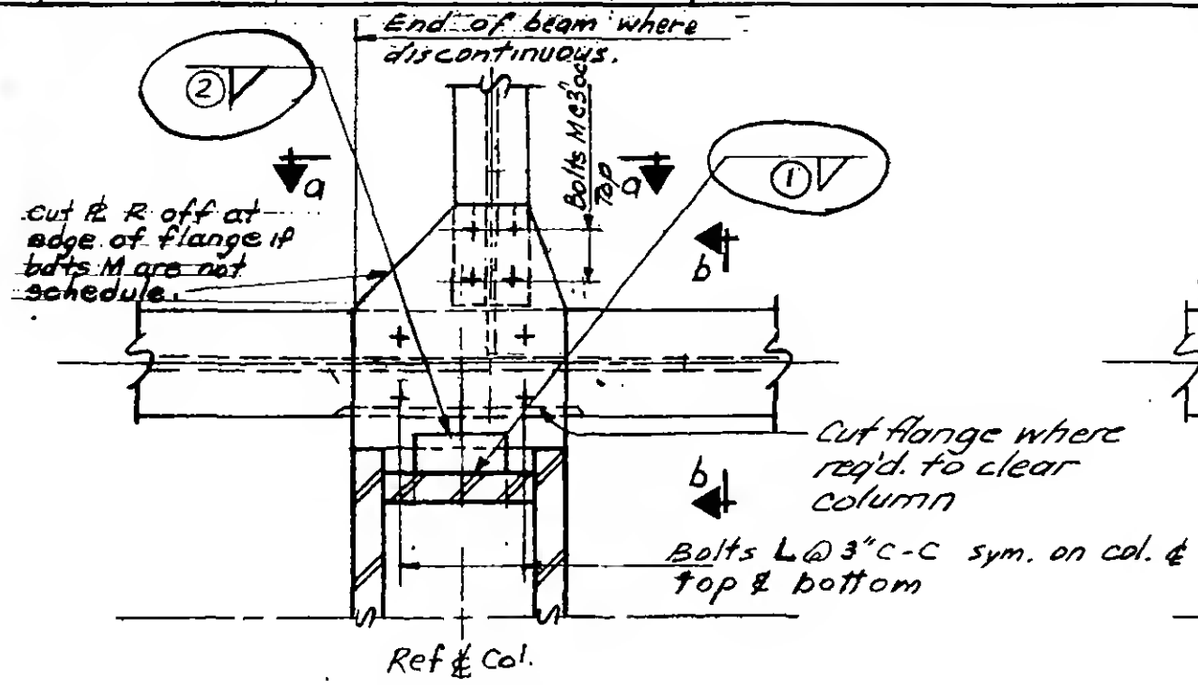

Plan

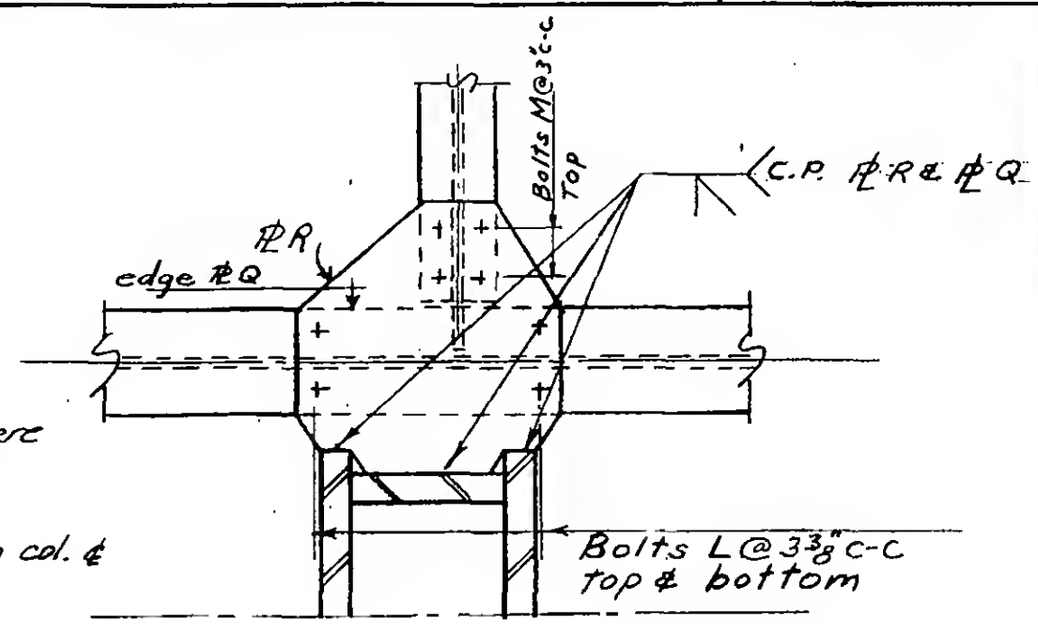

Plan Detail F, G & H only

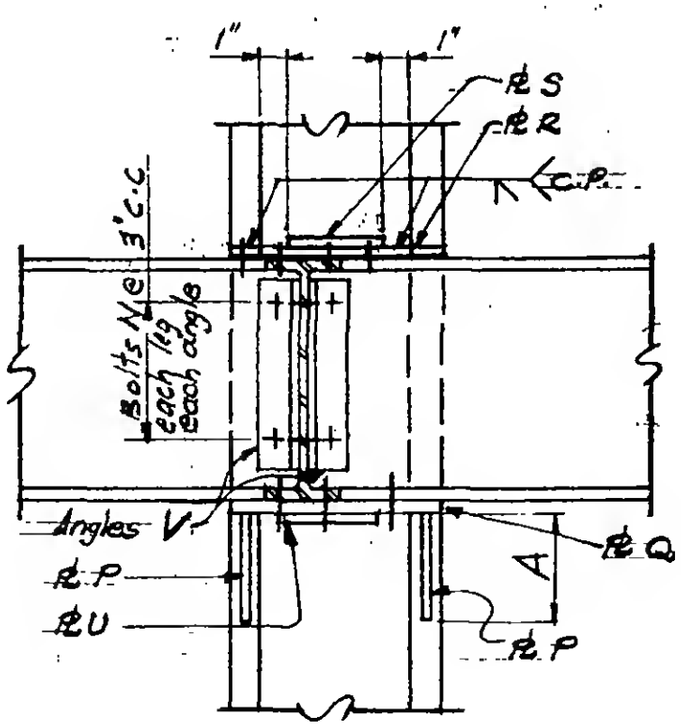

Section a-a

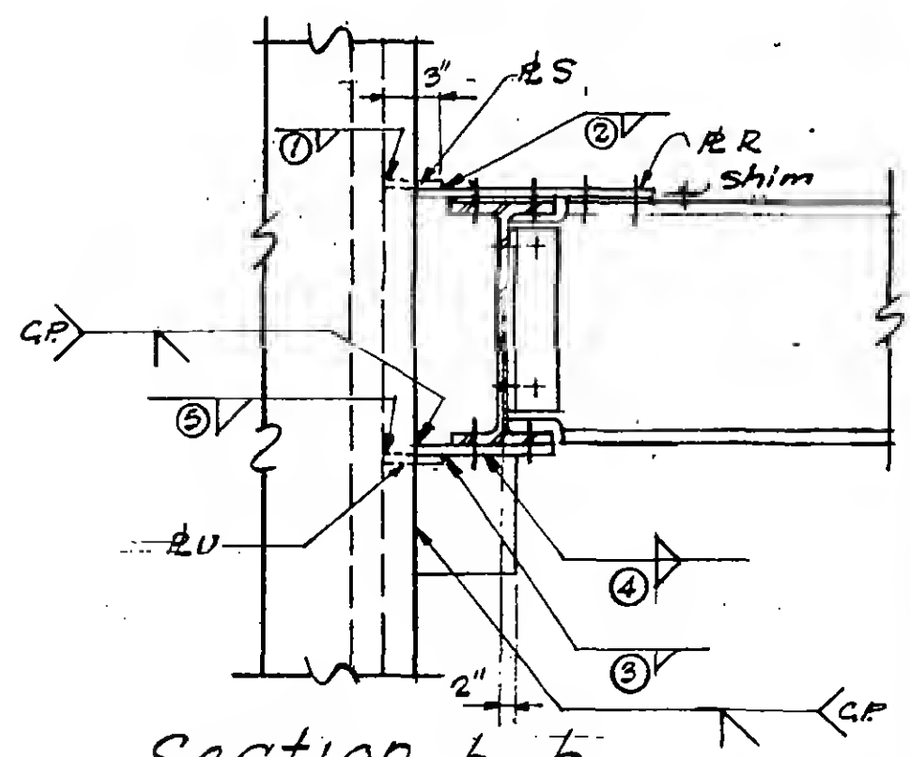

Section b-b

6-AB1-114.2

SKILLING - HELLE - CHRISTIANSEN - ROBERTSON Structural & Civil Engineers

PROJECT THE WORLD TRADE CENTER | TITLE SCHEDULE FOR DETAIL 307H & I | DATE 8-5-67

REVISIONS
9-15-67
11-10-67

	307H	307I
PLATES		
P	1/2"	1/2"
Q	1"	1/2"
R	1"	1/2"
S	—	3/8"
T	—	—
U	—	3/8"
ANGLES		
V	4x3 1/2x5/16	4x3 1/2x5/16
DIMENSIONS		
A	1'-2"	0'-10"
C	—	—
BOLTS		
K	—	—
L	12-1"ϕ	7-3/4"ϕ (one row)
M	4-7/8"ϕ	4-7/8"ϕ
N	3-1"ϕ	3-3/4"ϕ
WELDS		
1	—	5/16
2	—	5/16
3	—	5/16
4	5/16	—
5	—	5/16
6	—	—
7	—	—

6-AB1-114.3

SKILLING - HELLE - CHRISTIANSEN - ROBERTSON Structural & Civil Engineers

PROJECT THE WORLD TRADE CENTER | TITLE CONNECTION DETAIL 307 J | DATE 12-21-67

REVISIONS

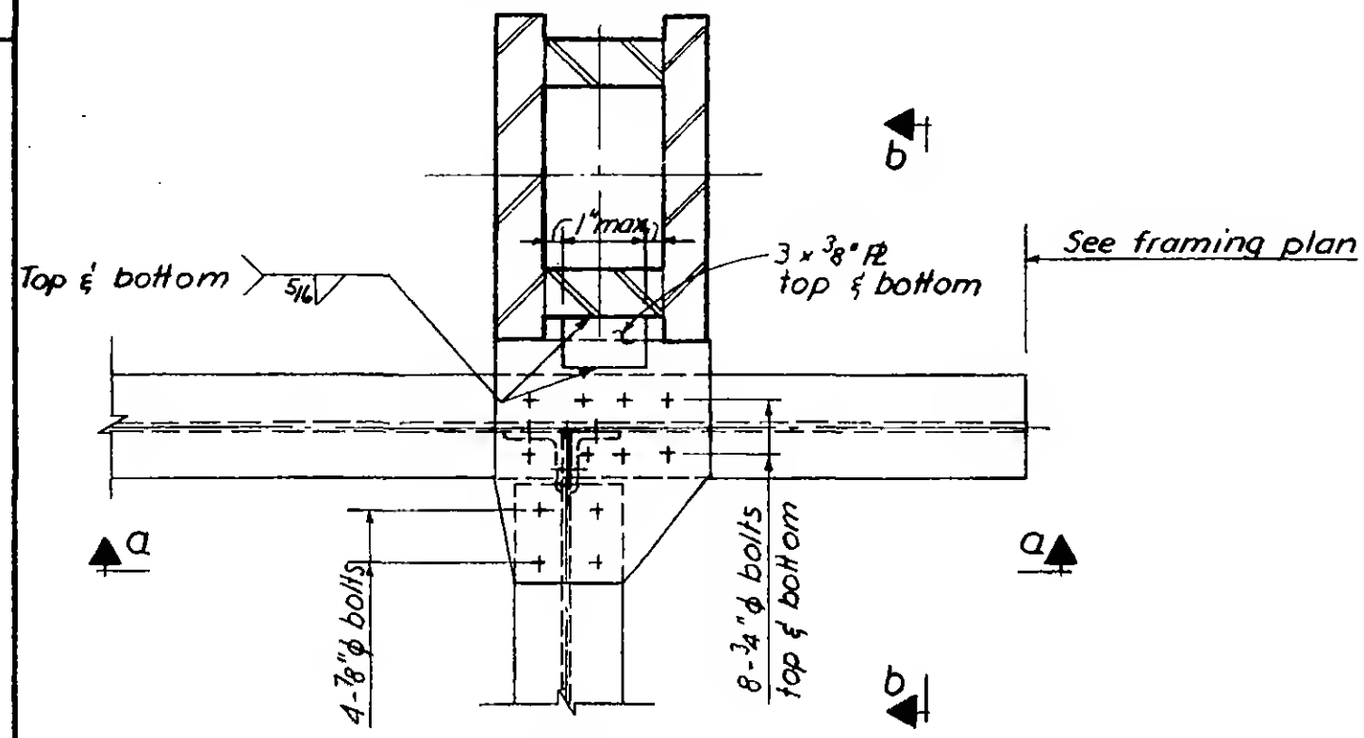

Plan

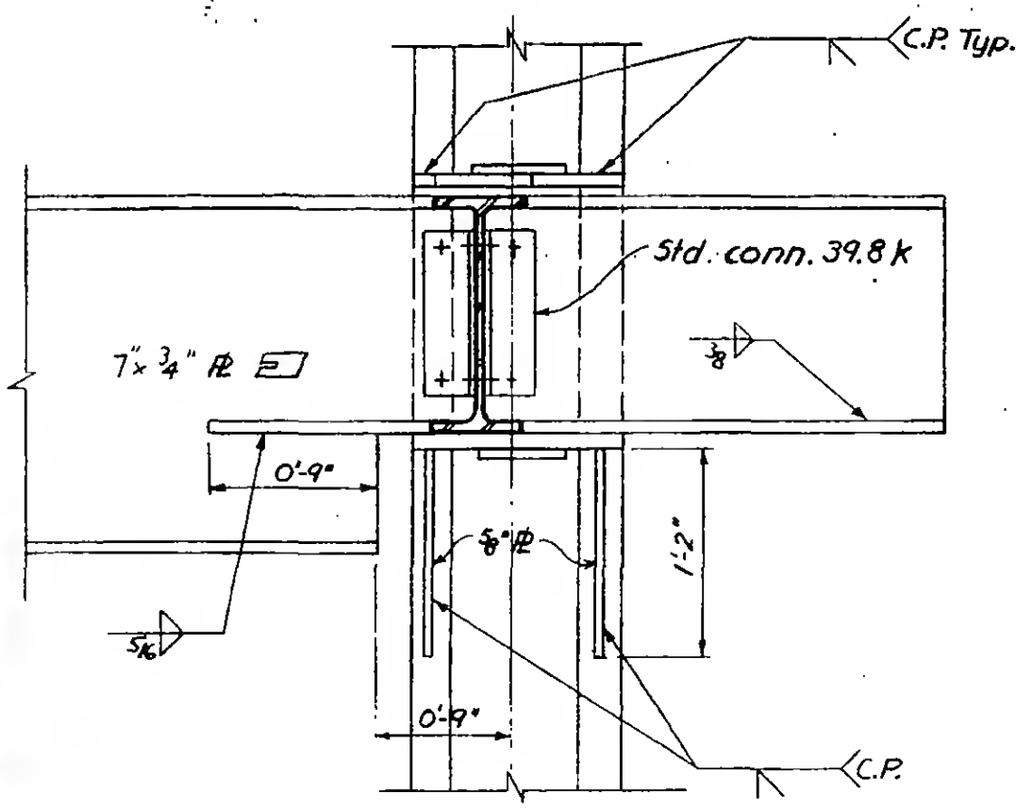

Section a-a

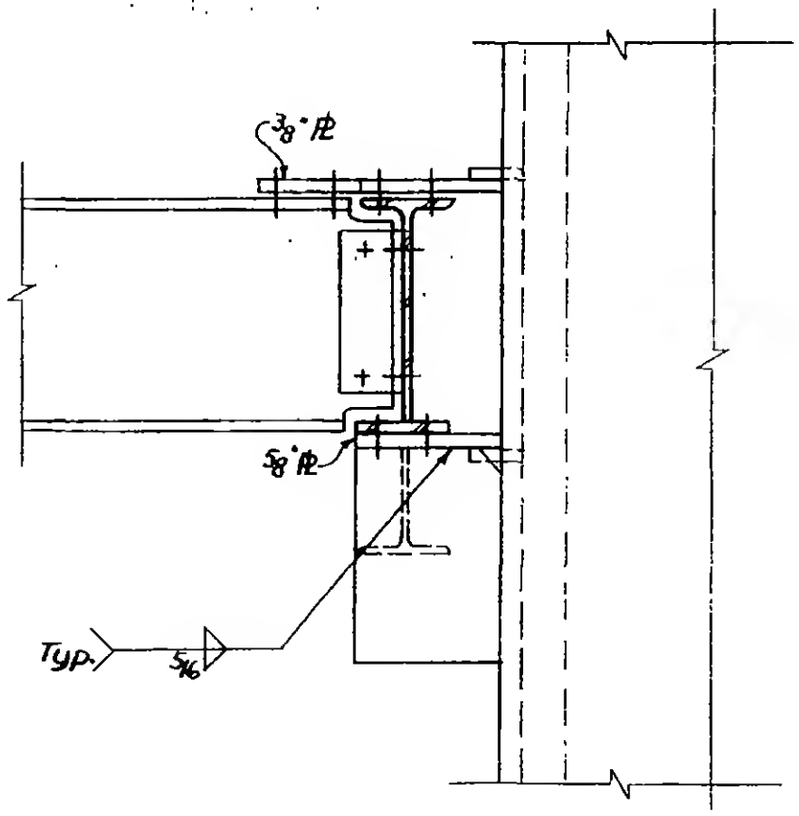

Section b-b

6-ABI-114.4

LICENSED PROFESSIONAL ENGINEER LESLIE E. ROBERTSON No. 34360 UNIVERSITY OF THE STATE OF NEW YORK

SKILLING - HELLE - CHRISTIANSEN - ROBERTSON Structural & Civil Engineers

PROJECT: THE WORLD TRADE CENTER | TITLE: CONNECTION DETAIL 308 A | DATE: 6-5-67

REVISIONS
9-15-67
11-10-67

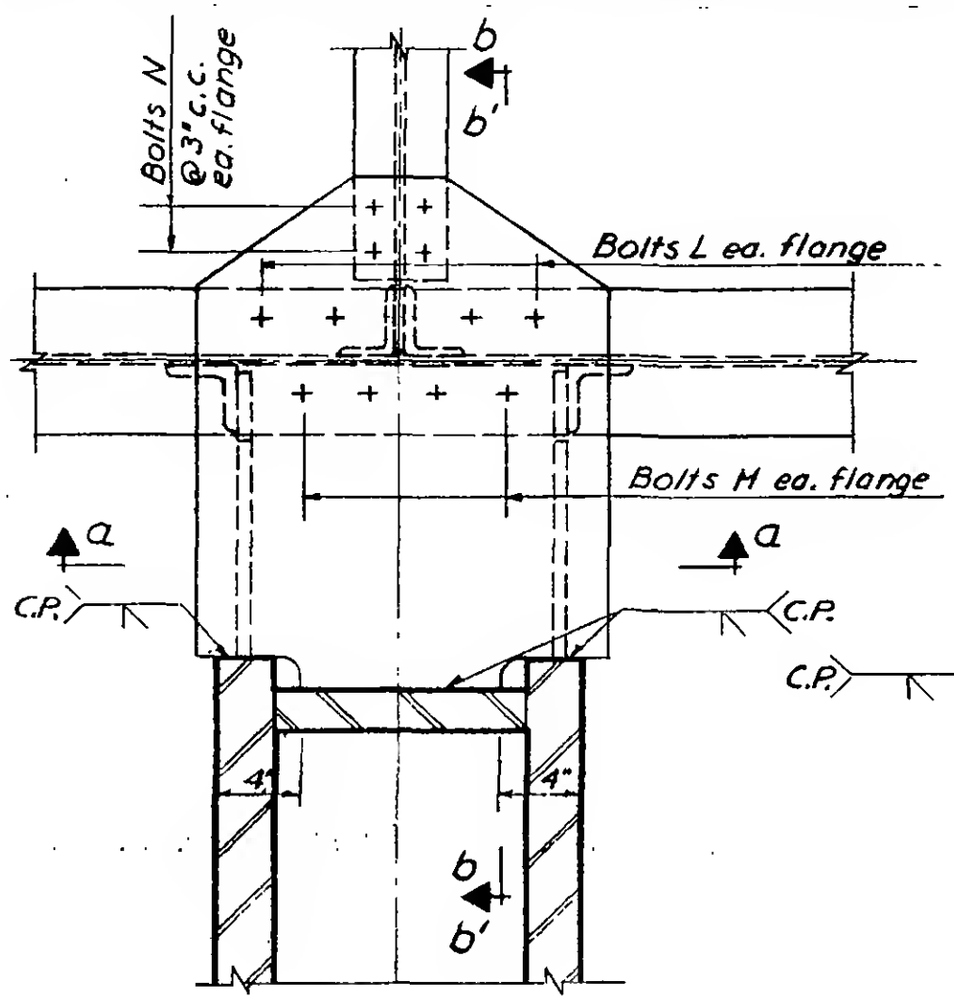

Plan

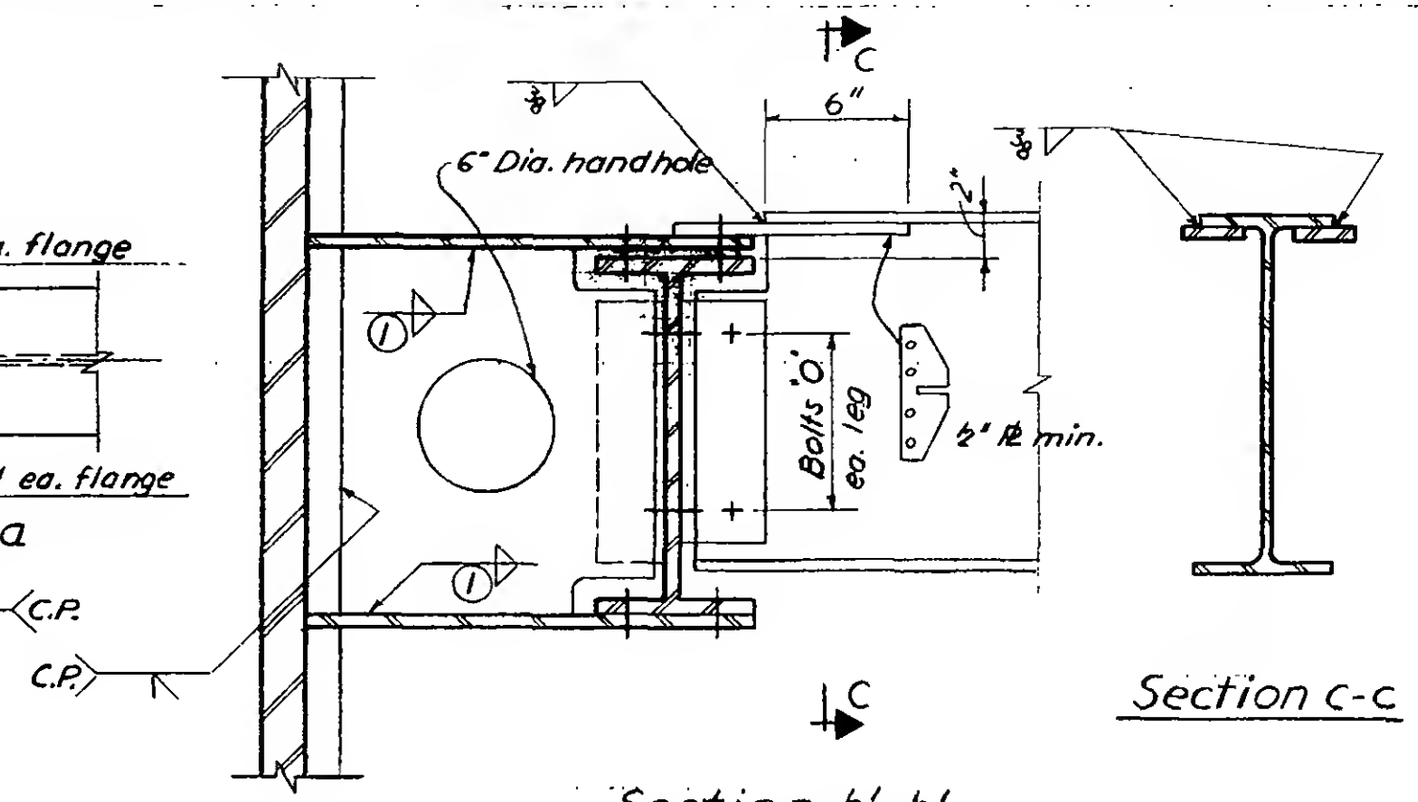

Section c-c

Section b'-b'
for beams at different elevations

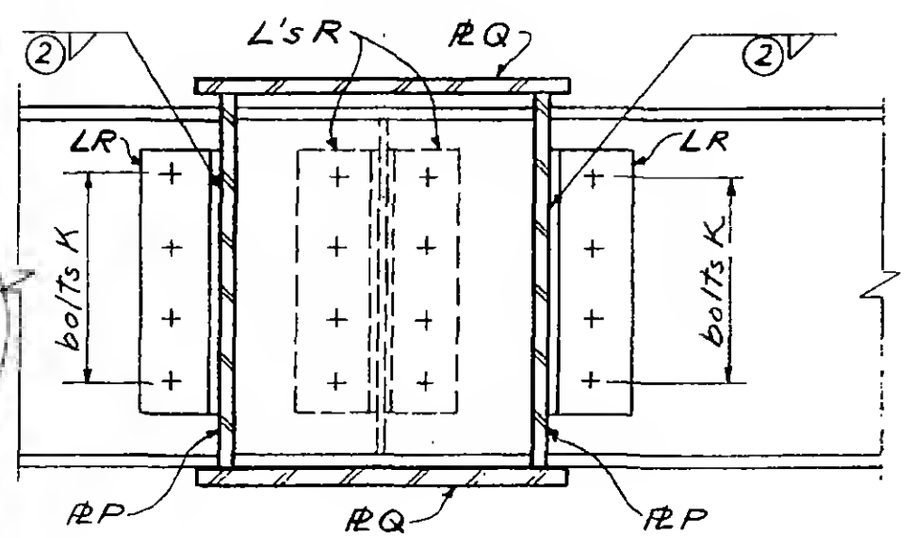

Section a-a

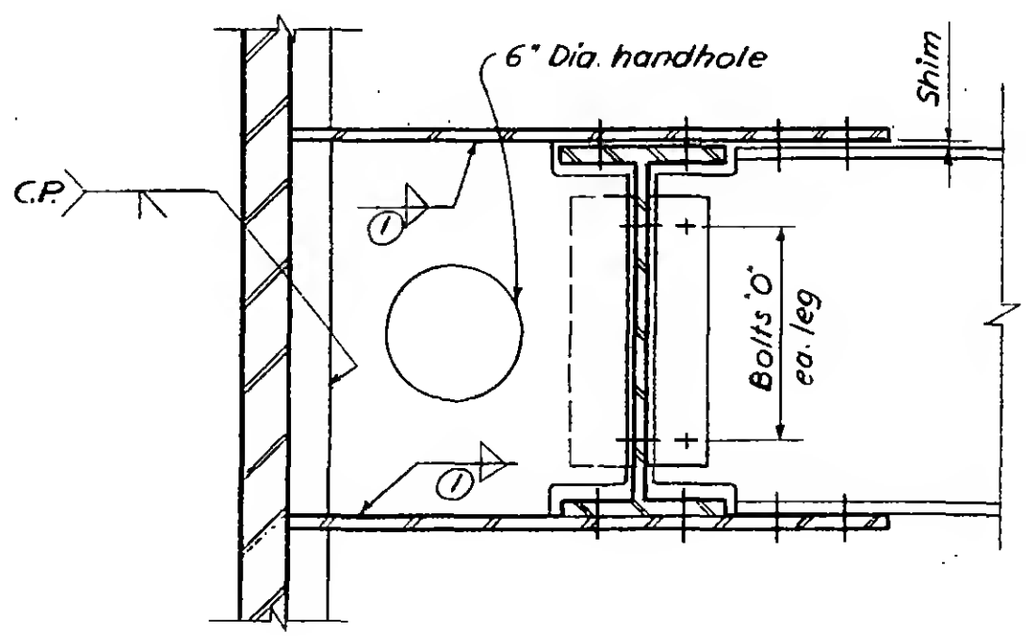

Section b-b
Beams at same elevation

LICENSED PROFESSIONAL ENGINEER
LESLIE E. ROBERTSON
No. 34360
UNIVERSITY OF THE STATE OF NEW YORK

6-ABI-115

SKILLING - HELLE - CHRISTIANSEN - ROBERTSON Structural & Civil Engineers

PROJECT THE WORLD TRADE CENTER TITLE SCHEDULE FOR DETAIL 308A DATE 9-15-67

REVISIONS

	308 A
PLATES	
P	3/4"
Q	5/8"
ANGLES	
R	4×3 1/2×3/8×0'-11 1/2"
BOLTS	
K	4-7/8"Φ
L	5-1 1/8"Φ (A-490)
M	4-1 1/8"Φ (A490)
N	4-3/4"Φ
"O"	4-3/4"Φ
WELDS	
①	5/16
②	5/16

LICENSED PROFESSIONAL ENGINEER
LESLIE E. ROBERTSON
No. 34360
UNIVERSITY OF THE STATE OF NEW YORK

6-AB1-115.1

WORTHINGTON, SKILLING, HELLE & JACKSON — Civil & Structural Engineers

PROJECT: THE WORLD TRADE CENTER | TITLE: CONNECTION DETAIL 309 A | DATE: 6-5-67

REVISIONS: 9-15-67

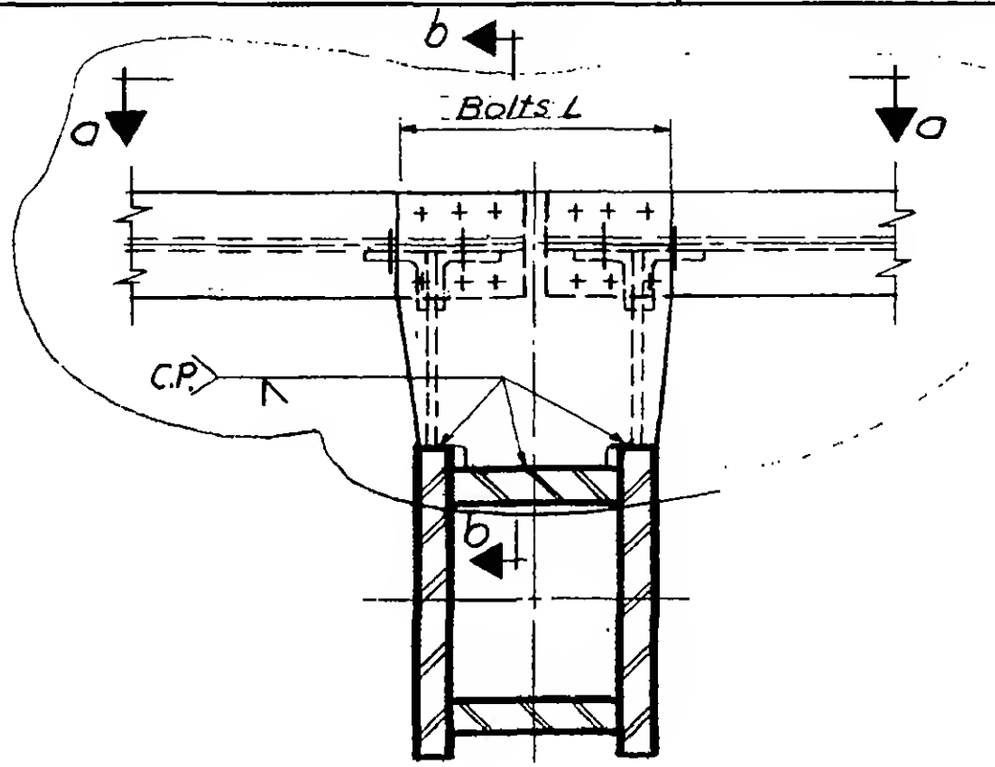

Plan

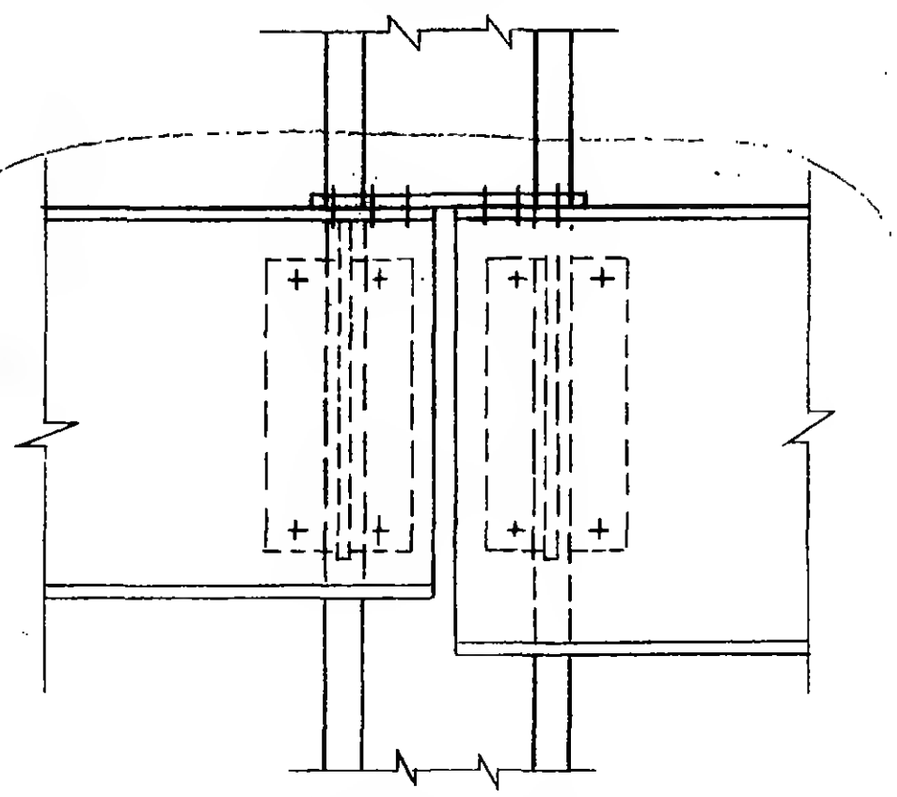

Section a-a

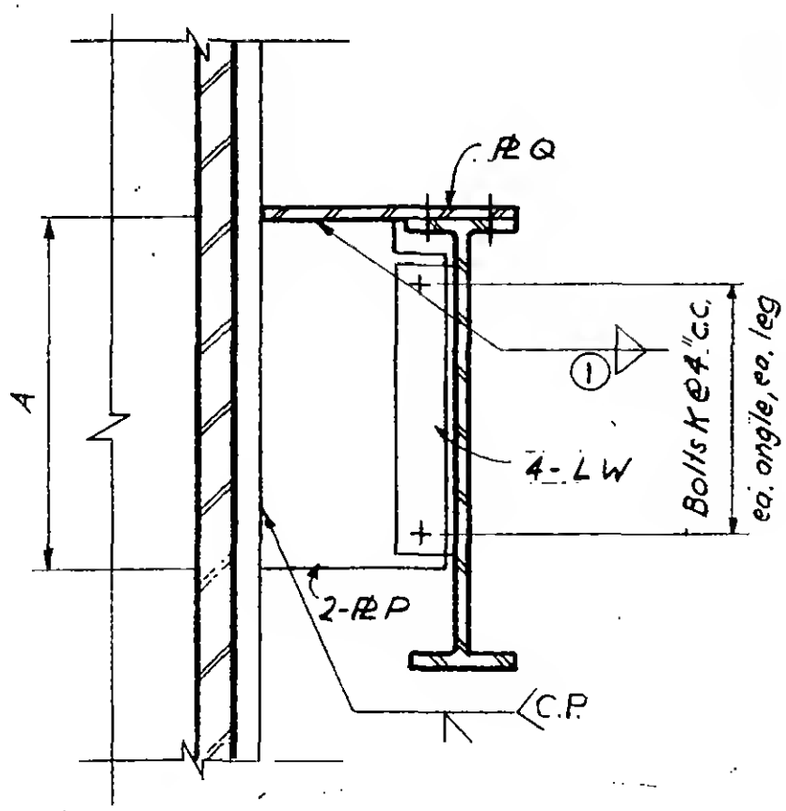

Section b-b

LICENSED PROFESSIONAL ENGINEER LESLIE E. ROBERTSON No. 34360 UNIVERSITY OF THE STATE OF NEW YORK

6-AB1-116

SKILLING - HELLE - CHRISTIANSEN - ROBERTSON Structural & Civil Engineers

PROJECT THE WORLD TRADE CENTER | TITLE SCHEDULE FOR DETAIL 309A | DATE 9-15-67

REVISIONS

	309A
PLATES	
P	3/4"
Q	1"
ANGLES	
W	4 x 3 1/2 x 5/16
BOLTS	
K	4 - 3/4" Φ
L	12 - 1 1/8" Φ (A490)
DIMENSIONS	
A	1'-8"
WELDS	
①	3/8"

LICENSED PROFESSIONAL ENGINEER LESLIE E. ROBERTSON No. 34360 UNIVERSITY OF THE STATE OF NEW YORK

6-AB1-116.1

WORTHINGTON, SKILLING, HELLE & JACKSON — Civil & Structural Engineers

PROJECT: THE WORLD TRADE CENTER | TITLE: CONNECTION DETAIL 310 A | DATE: 5-1-67

REVISIONS

6-30-67
7-28-67

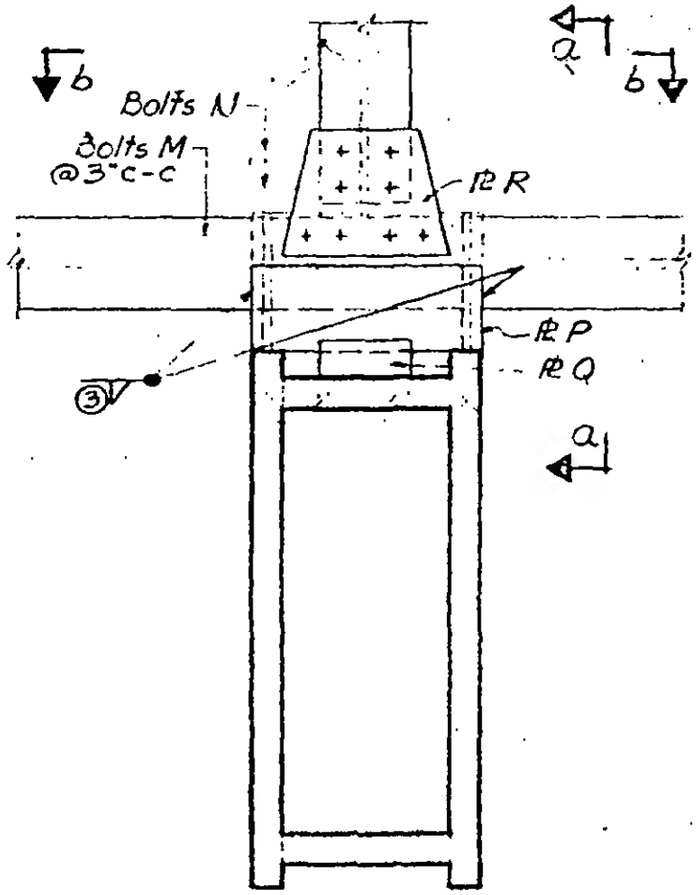

PLAN

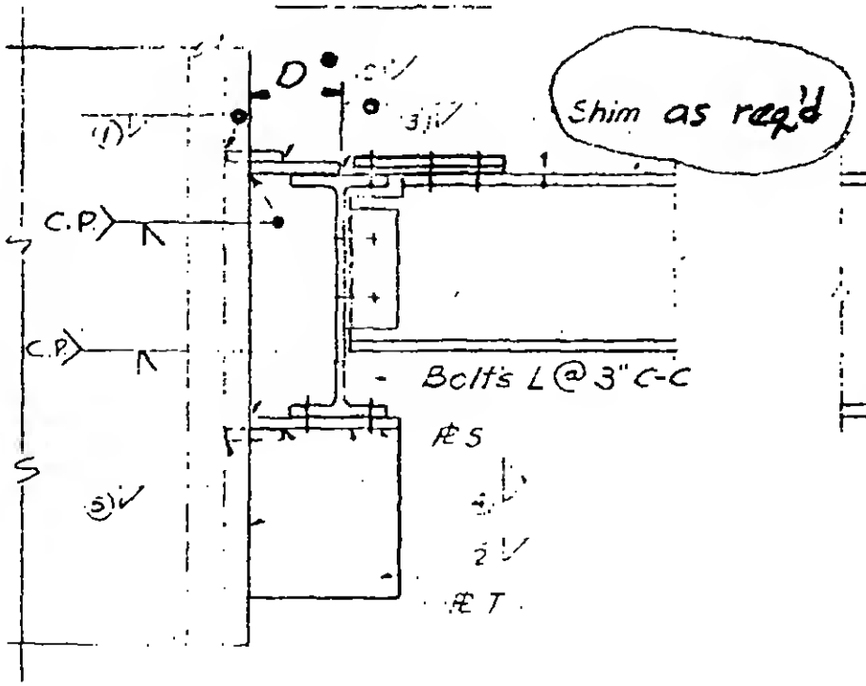

SECTION a-a

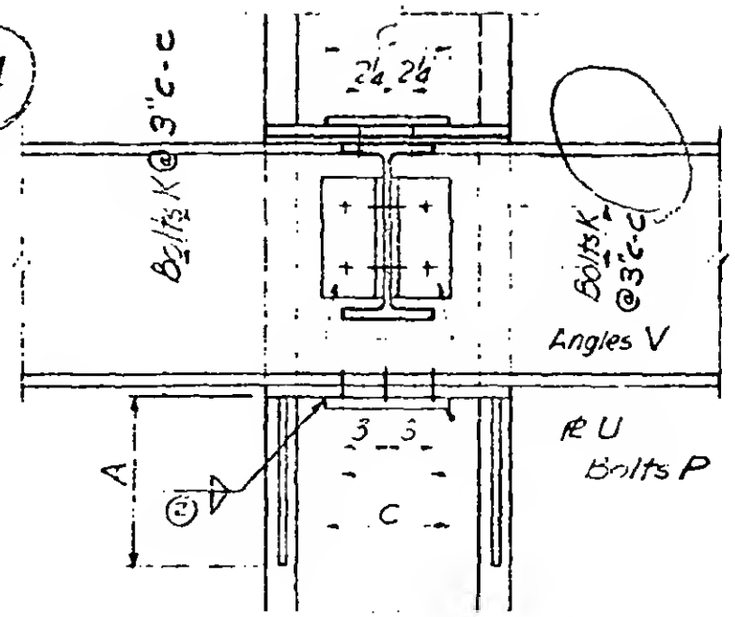

SECTION b-b

6-AB1-117

LICENSED PROFESSIONAL ENGINEER
LESLIE E. ROBERTSON
No. 34360
UNIVERSITY OF THE STATE OF NEW YORK

SKILLING - HELLE - CHRISTIANSEN - ROBERTSON Structural & Civil Engineers

PROJECT THE WORLD TRADE CENTER | TITLE SCHEDULE FOR DETAIL 310 A - F | DATE 6-30-67

REVISIONS
7-28-67
10-2-67
12-21-67

REF. DWGS.	6-ABI-117	6-ABI-117.2	6-ABI-117.2	6-ABI-117.2	6-ABI-117.2	6-ABI-117.2
	310 A	310 B	310 C	310 D	310 E	310 F
PLATES						
P	8" x 3/4" x 1'-2"	—	—	—	—	—
Q	4" x 1/2" x 0'-8"	5/16"	1/2"	—	1/2"	3/4"
R	1/2"	5/16"	3/8"	5/16"	5/8"	1"
S	12 1/2" x 3/4" x 1'-2"	5/8"	3/4"	3/4"	5/8"	5/8"
T	12 1/2" x 5/8"	8" x 5/8"	8" x 3/4"	8" x 3/4"	8" x 5/8"	8" x 1/2"
U	4" x 1/2" x 0'-8"	5/16"	3/8"	—	1/2"	1/2"
ANGLES						
V	4 x 3 1/2 x 5/16 x 0'-8 1/2"	4 x 3 1/2 x 5/16	4 x 3 1/2 x 5/16	4 x 3 1/2 x 5/16	4 x 3 1/2 x 5/16	4 x 3 1/2 x 5/16
DIMENSIONS						
A	12"	1'-2"	1'-2"	1'-2"	1'-4"	1'-2"
C	8"	—	—	—	—	—
D	8"	—	—	—	—	—
BOLTS						
K	2 - 3/4" ϕ (A325)	3 - 3/4" ϕ	3 - 3/4" ϕ	3 - 3/4" ϕ	3 - 3/4" ϕ	3 - 3/4" ϕ
L	2 - 3/4" ϕ (A325)	3 - 3/4" ϕ	3 - 3/4" ϕ	3 - 3/4" ϕ	3 - 3/4" ϕ	3 - 3/4" ϕ
M	4 - 7/8" ϕ (A325)	—	—	—	—	—
N	4 - 7/8" ϕ (A325)	4 - 7/8" ϕ	6 - 7/8" ϕ	—	4 - 3/4" ϕ	4 - 1" ϕ
P	6 - 3/4" ϕ (A325)	8 - 3/4" ϕ	8 - 3/4" ϕ	4 - 3/4" ϕ	4 - 3/4" ϕ	4 - 3/4" ϕ
WELDS						
1	1/2	5/16	1/2	—	7/16	11/16
2	7/16	5/16	1/2	—	7/16	11/16
3	3/8	5/16	5/16	—	7/16	5/16
4	1/2	5/16	5/16	5/16	3/8	3/8
5	1/2	5/16	3/8	—	7/16	5/16

LICENSED PROFESSIONAL ENGINEER LESLIE E. ROBERTSON No. 34360 UNIVERSITY OF THE STATE OF NEW YORK

6-ABI-117.1

WORTHINGTON, SKILLING, HELLE & JACKSON — Civil & Structural Engineers

PROJECT: THE WORLD TRADE CENTER | TITLE: CONNECTION DETAIL 310 B, C, D, E, F, G, I | DATE: 7-28-67

REVISIONS

10-2-67
2-9-68

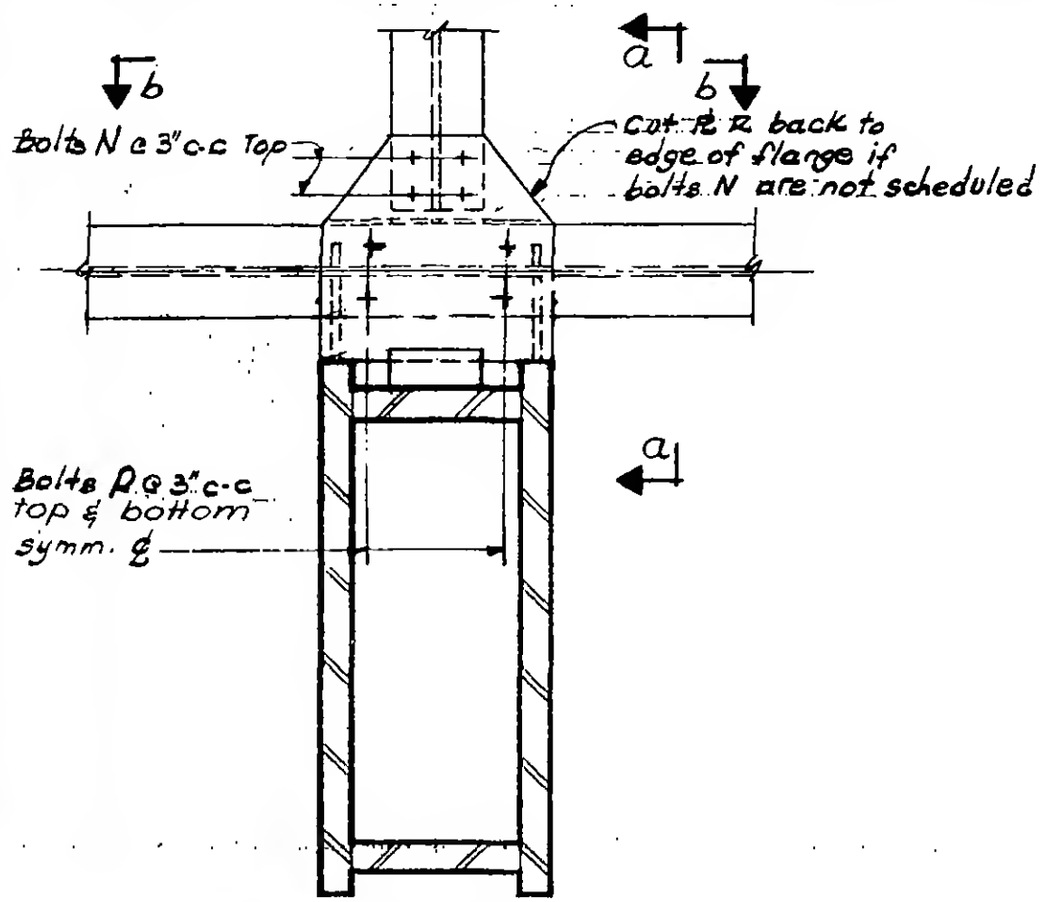

PLAN

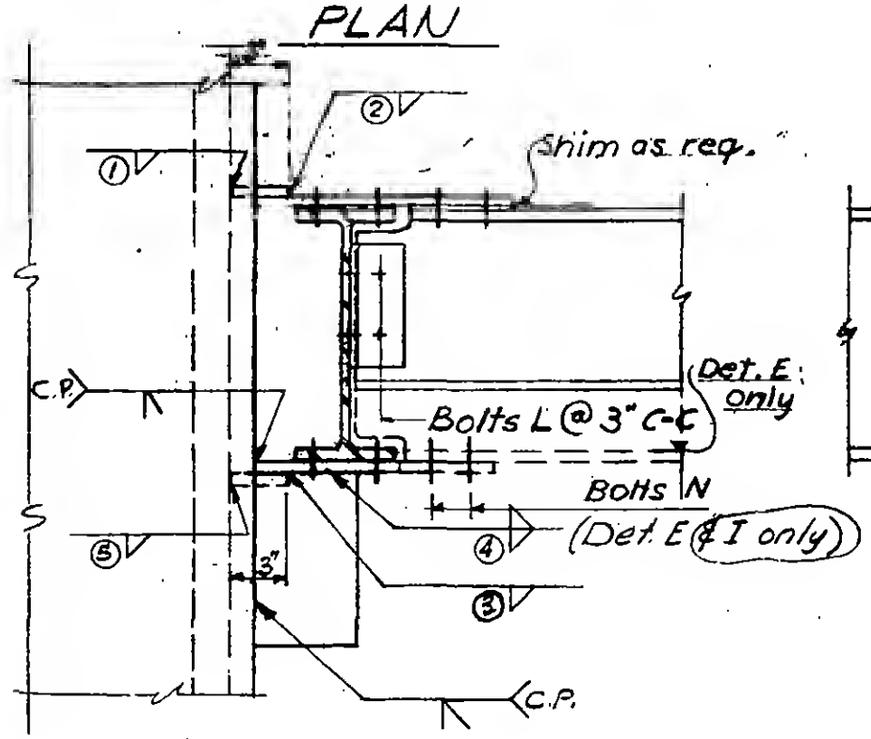

SECTION a-a

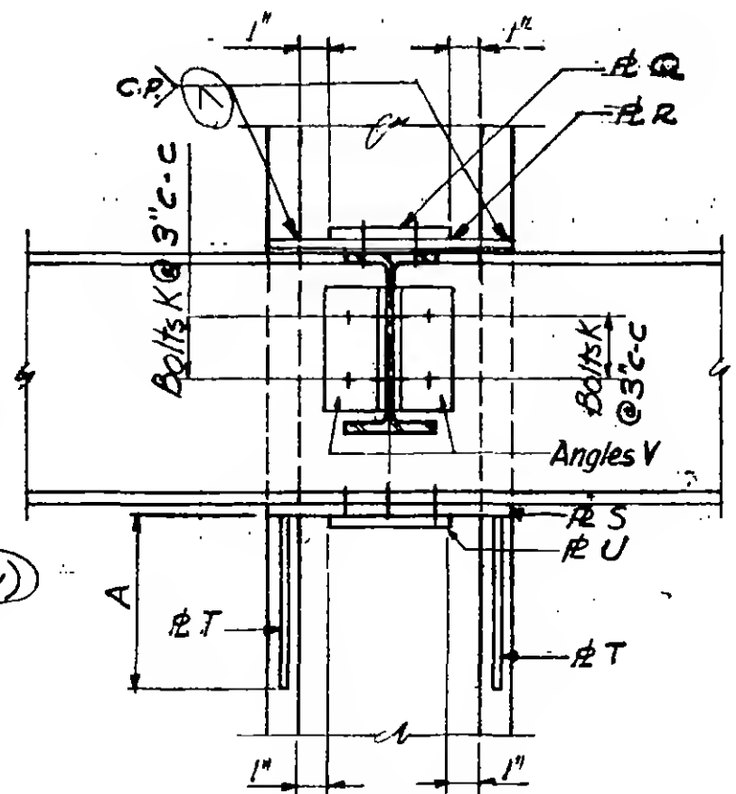

SECTION b-b

6-AB1-1172

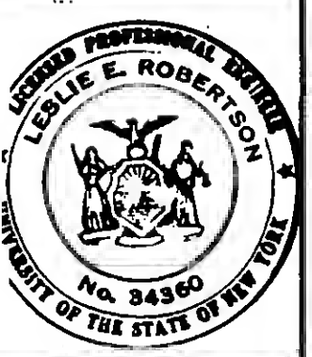

WORTHINGTON SKILLING HELLE & JACKSON — Civil & Structural Engineers

PROJECT: THE WORLD TRADE CENTER | TITLE: CONNECTION DETAIL 310 B, C, D, E, F, G | DATE: 7-28-67

VISIONS

10-8-67

12-8-67

Use alt. for
beam no. 857
Col. 906 elev. 284'
& beam no. 1811
Col. 904 elev. 284

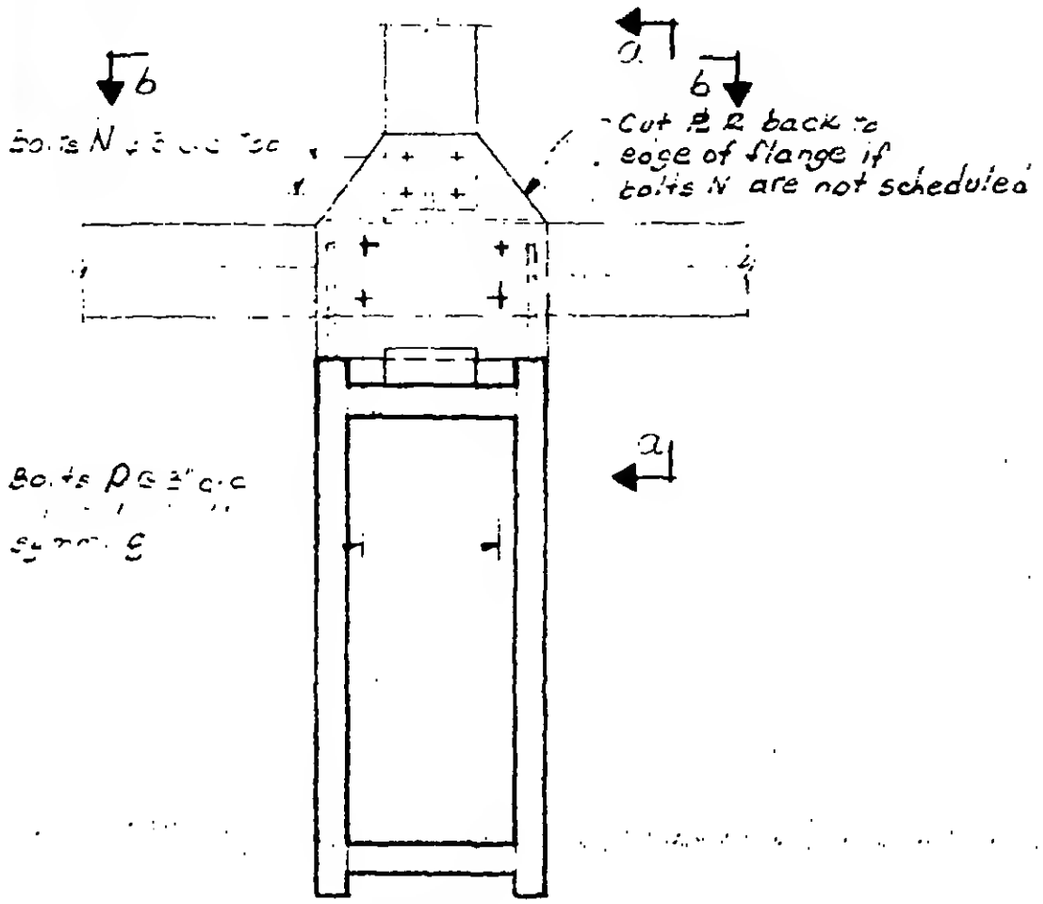

PLAN

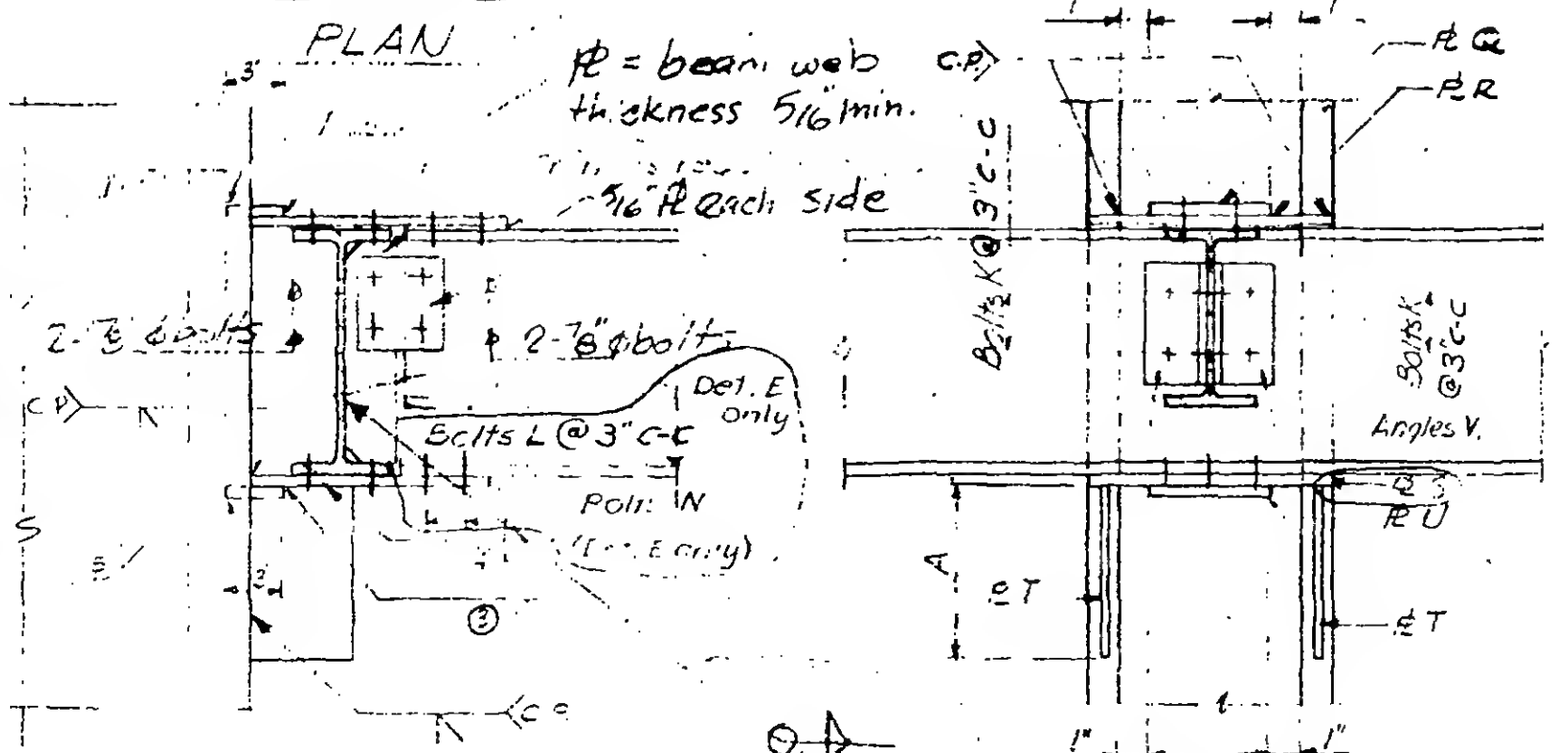

SECTION a-a

SECTION b-b

Alternate
E-ABI-1172

REGISTERED PROFESSIONAL ENGINEER
LESLIE E. ROBERTSON
No. 34360
STATE OF NEW YORK

SKILLING - HELLE - CHRISTIANSEN - ROBERTSON Structural & Civil Engineers

PROJECT: THE WORLD TRADE CENTER | TITLE: SCHEDULE FOR DETAIL 3106 I | DATE: 10-2-67

REVISIONS

2-9-68

REF. DWGS.	6-ABI-117.2	6-ABI-117.2				
	3106	3101				
PLATES						
P	—	—				
Q	3/8	3/8				
R	5/8"	1"				
S	1/2"	1"				
T	1/2"	7/8"				
U	—	3/8"				
ANGLES						
V	4 - 3 1/2 x 5/16	4 x 3 1/2 x 3/8				
DIMENSIONS						
A	1'-2"	1'-2"				
BOLTS						
K	3 - 3/4" ϕ	3 - 7/8" ϕ				
L	3 - 3/4" ϕ	3 - 7/8" ϕ				
M	—	—				
N	4 - 7/8" ϕ	8 - 7/8" ϕ				
P	4 - 3/4" ϕ	8 - 7/8" ϕ				
WELDS						
1	5/16	3/8				
2	5/16	3/8				
3	—	3/8				
4	3/8	5/16				
5	—	3/8				

LICENSED PROFESSIONAL ENGINEER LESLIE E. ROBERTSON No. 34360 UNIVERSITY OF THE STATE OF NEW YORK

6-ABI-117.3

SKILLING - HELLE - CHRISTIANSEN - ROBERTSON Structural & Civil Engineers

PROJECT THE WORLD TRADE CENTER | TITLE CONNECTION DETAIL 310 J | DATE 4-17-68

REVISIONS

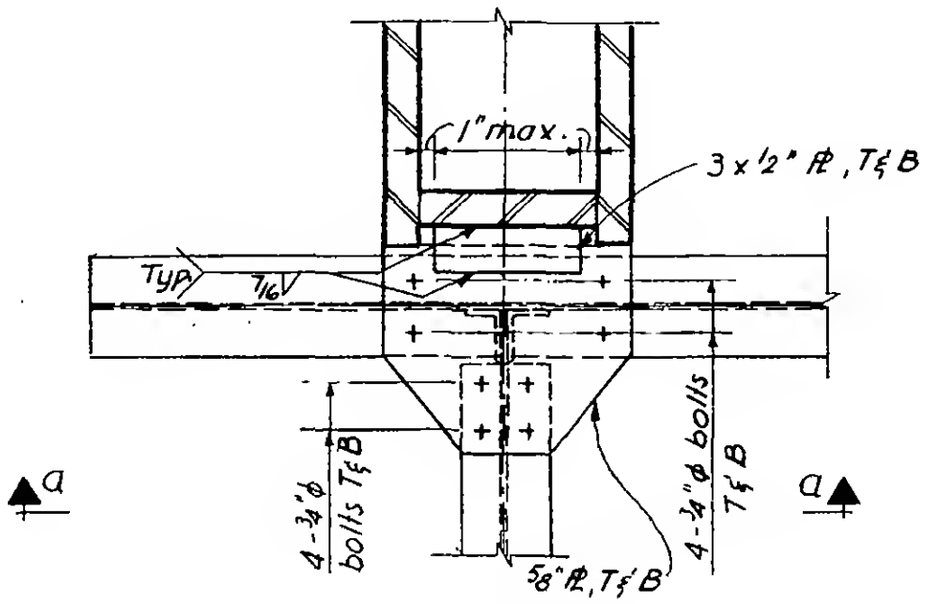

Plan

Wherever suitable reuse previously scheduled (Detail 310E) plates and bolts.

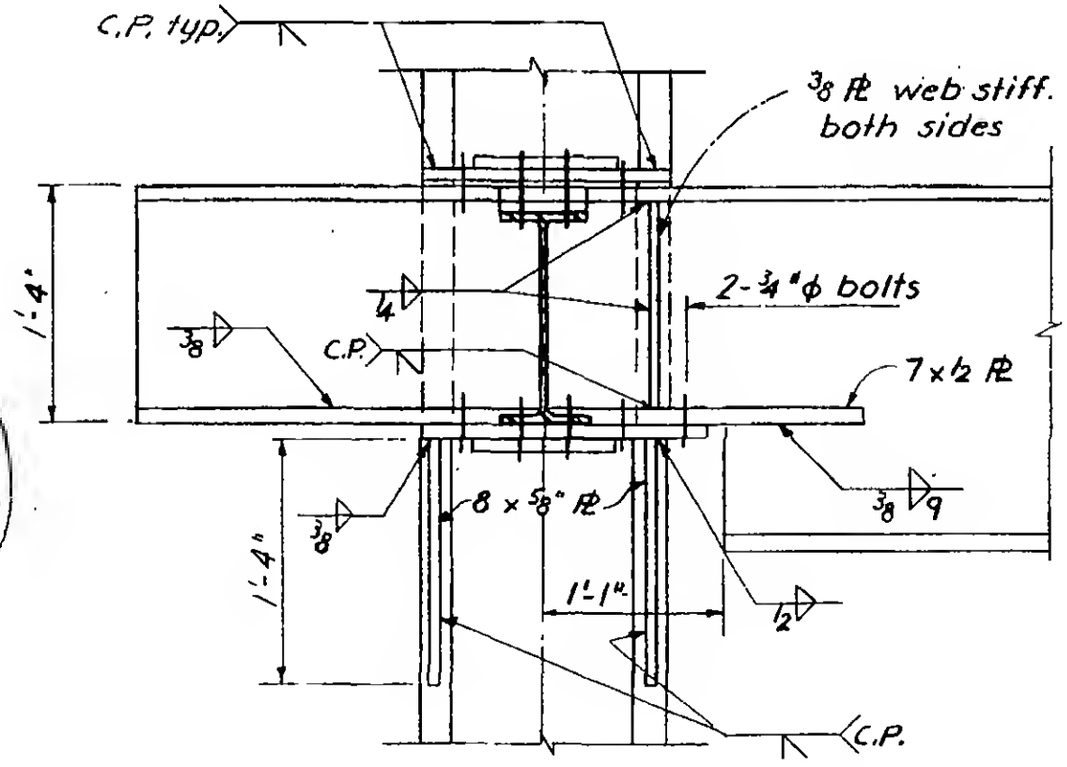

Section a-a

LICENSED PROFESSIONAL ENGINEER LESLIE E. ROBERTSON No. 34360 UNIVERSITY OF THE STATE OF NEW YORK

6-AB1-117.4

WORTHINGTON, SKILLING, HELLE & JACKSON — Civil & Structural Engineers

PROJECT: THE WORLD TRADE CENTER | TITLE: CONNECTION DETAIL 311 A, B, C, D | DATE: 6-5-67

REVISIONS
9-15-67
10-5-67
11-10-67

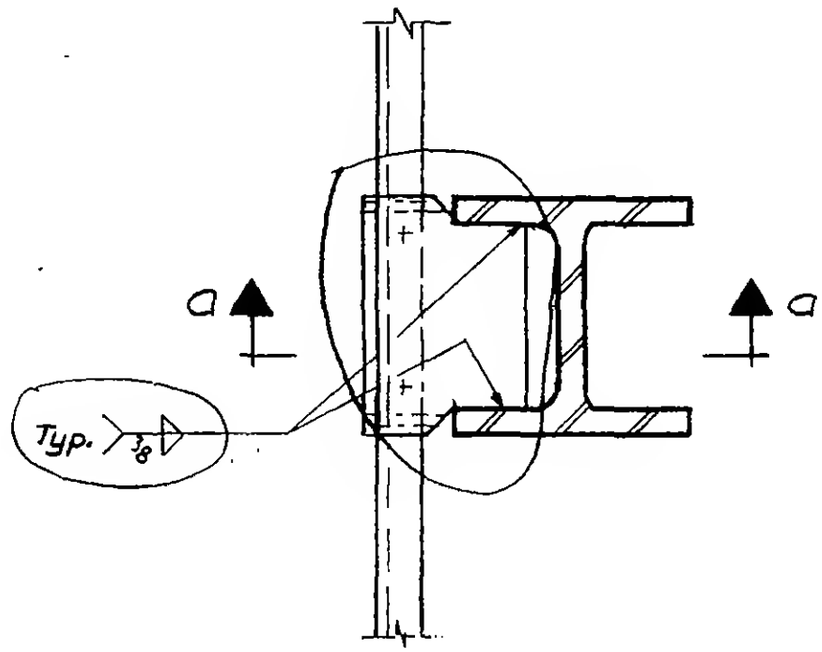

Plan (A)

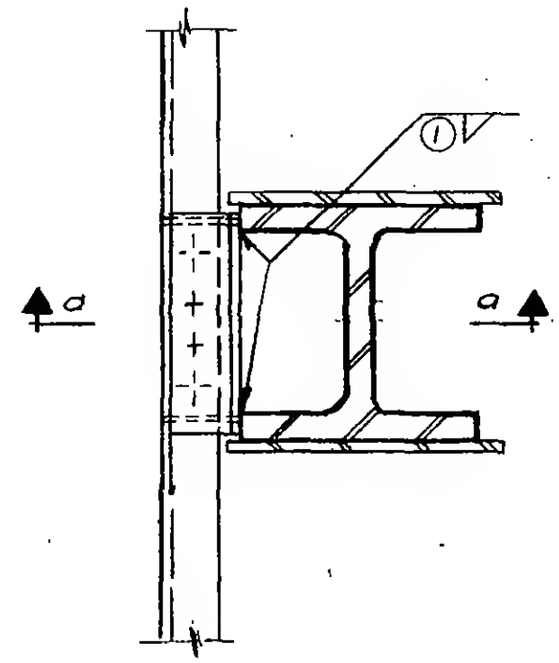

Plan (B,C,D)

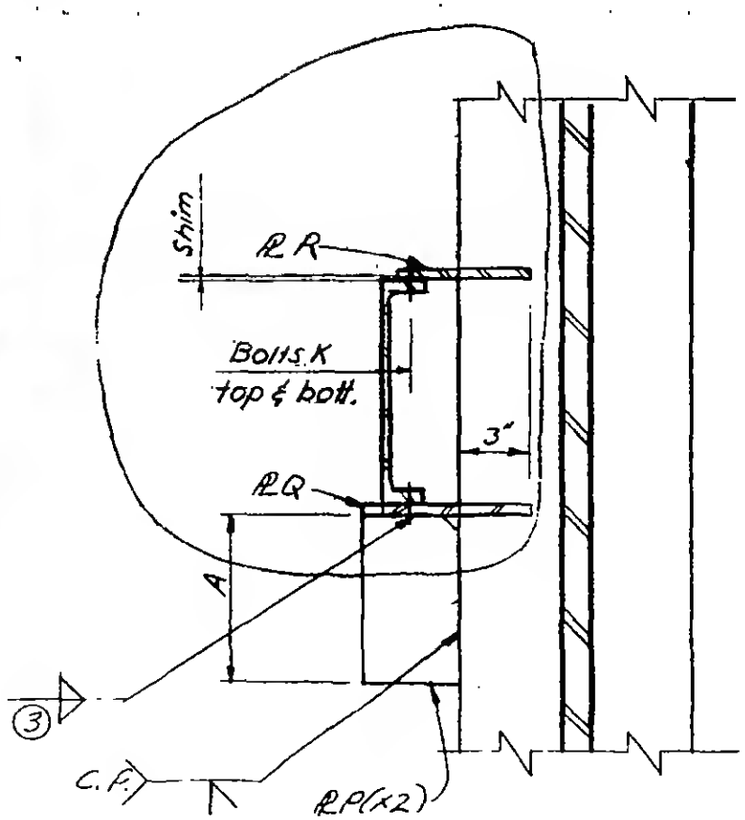

Section a-a

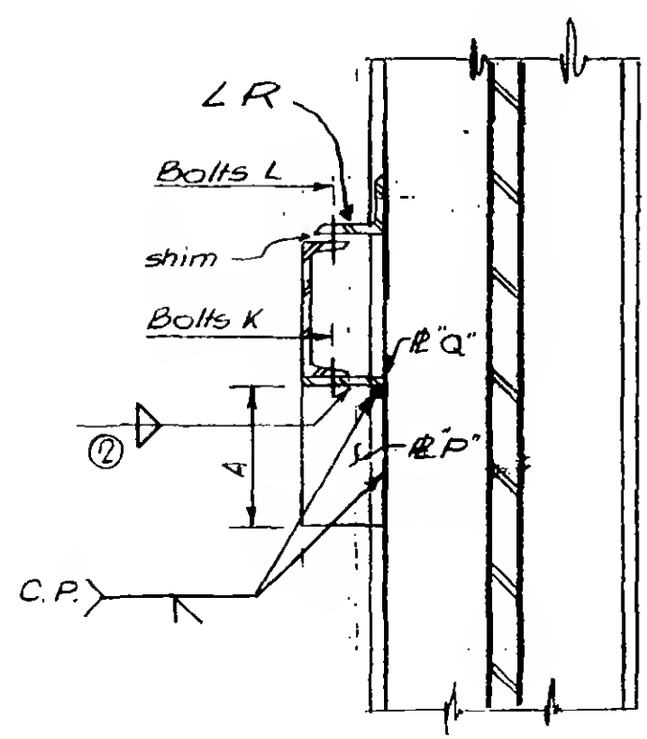

Section a-a

6-ABI-118

SKILLING - HELLE - CHRISTIANSEN - ROBERTSON Structural & Civil Engineers

PROJECT: THE WORLD TRADE CENTER | TITLE: SCHEDULE FOR DETAIL 311 A, B, C, D | DATE: 9-15-67

REVISIONS
10-5-67
11-10-67

	311 A	311 B	311 C	311 D		
PLATES						
P	6" x 5/8"	3/4"	3/4"	5/8"		
Q	5/8"	3/4"	3/4"	5/8"		
R	5/8"	—	—	—		
ANGLES R	—	5 x 3 x 3/8	5 x 3 x 3/8	5 x 3 x 3/8		
DIMENSION						
L	1'-[illegible]"	0'-10"	0'-11"	1'-0"		
BOLTS						
K	4-1"φ	4-3/4"φ	4-3/4"φ	4-3/4"φ		
L	—	2-3/4"φ	2-3/4"φ	2-3/4"φ		
WELDS						
①	5/16"	1/4"	1/4"	1/4"		
②	5/16"	5/16"	5/16"	5/16"		
③	5/16"	—	—	—		

LICENSED PROFESSIONAL ENGINEER
LESLIE E. ROBERTSON
No. 34360
UNIVERSITY OF THE STATE OF NEW YORK

G-AB1-118.1

WORTHINGTON, SKILLING, HELLE & JACKSON — Civil & Structural Engineers

PROJECT: THE WORLD TRADE CENTER | TITLE: CONNECTION DETAIL 3/2 A | DATE: 6-12-67

REVISIONS
7-28-67

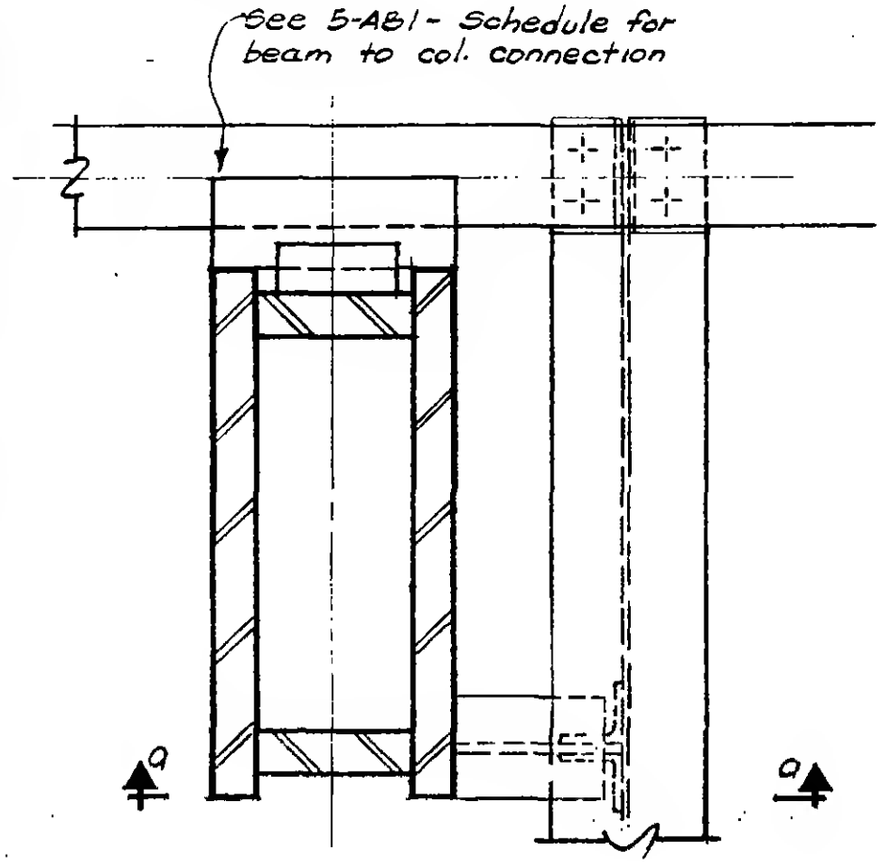

PLAN

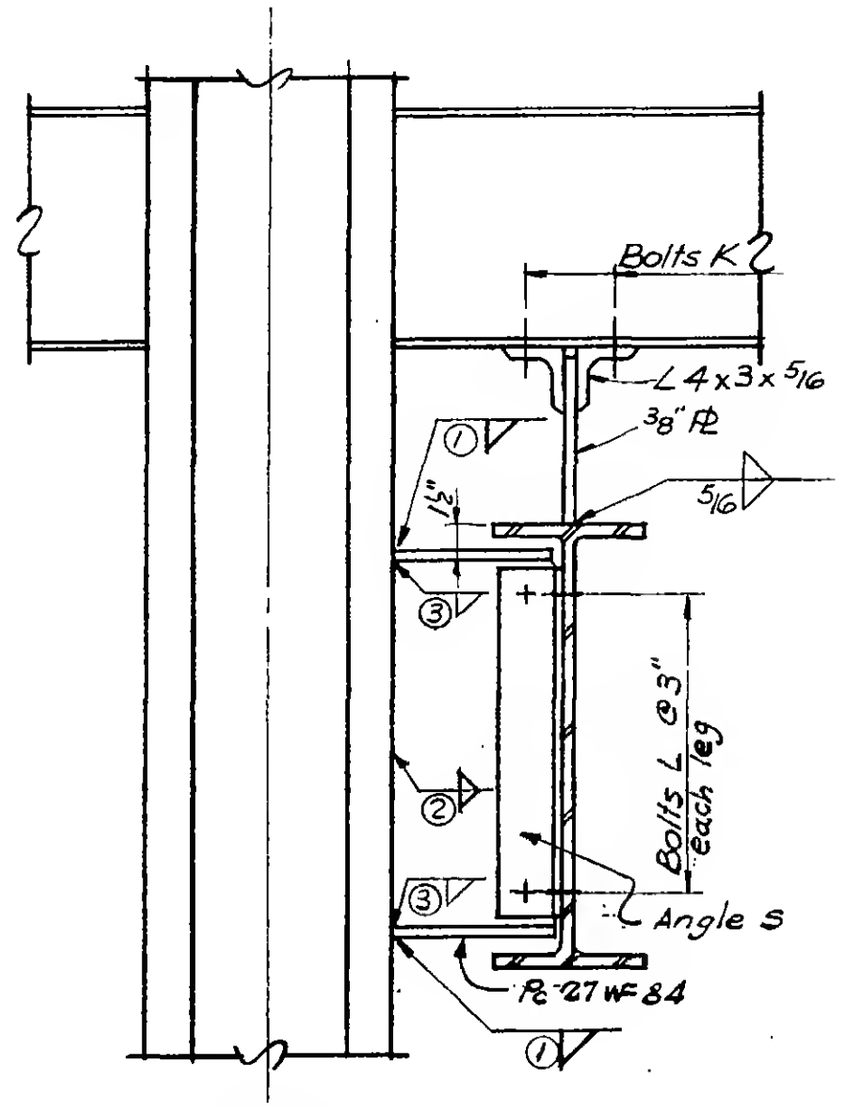

SECTION a-a

6-AB1-119

WORTHINGTON, SKILLING, HELLE & JACKSON — Civil & Structural Engineers

PROJECT: THE WORLD TRADE CENTER | TITLE: SCHEDULE FOR DETAIL 312A | DATE: 7-28-67

REVISIONS

	312 A
ANGLE	
S	4 x 3½ x 5/16
BOLTS	
K	4 - ¾"ϕ
L	8 - ⅞"ϕ
WELDS	
①	½
②	7/16
③	½

LICENSED PROFESSIONAL ENGINEER
LESLIE E. ROBERTSON
No. 34360
STATE OF NEW YORK

6-AB1-119.1