WTCI-540-LERA

BCG-5

540-L

DOCUMENT DATA FORM

Your Name: HSL 540-L

Document Title or Description (max. 254 characters): Circle: Same as cover (or fill in below)

Exterior wall column, connection Details (Drawing Book 4)

Include work order no. and floor no. if applicable

Roll # (e.g., CORR-4): BGC-5	Doc. ID (report #, dwg. #):	
Document Date: 1967	Document Author Name:	Author Organization: SHCR

KEYWORDS - HIGHLIGHT ALL THAT APPLY

Level 1

Bankers Trust	Project 6	WTC 4 - South Plaza Bldg.
Concourse	Project 7	WTC 5 - North Plaza Bldg.
Electrical Substation	Project 8	WTC 6 - Customs House
Liberty Plaza	WFC 1 - Oppenhiemer Dow	WTC 7
PATH Station	WFC 2 - Tower B	WTC Complex
Project 1	WFC 3 - American Express	WTC Plaza
Project 2	WFC 4 - Tower D	
Project 3	(WTC 1 - North Tower)	Add
Project 4	(WTC 2 - South Tower)	
Project 5	WTC 3 - Marriot Hotel	

Level 2

Accident analysis & risk	Mech./elec.	Add
Architectural	News coverage	
Data request	Police	
Emergency management	Security	
Evacuation	(Structural)	
Fire protection	Tenant alterations	
Fire service		

Level 3

1993 explosion	Deck	Human comfort	Splices
A/E fitout	Deflection	HVAC	Sprinkler
A-242	Demolition	Index	Stability
A-36	Design	Inspection	Stairways
A-497	Doors	Insulation	Standards
Air cooled condensers	Drawings	Joist	(Steel)
Analysis	Eastern States Steel	L-50	Steel composition
Angles	Egress	Loads	Stiffness
Antenna	Elevator	Maintenance	Structural review
Artifacts	Emergency communications	Marking	Survivor
Asbestos	Equipment	Mesh reinforcement	Tenant list
Beams	Escalator	Model	Testing
Bow tie	(Exterior columns)	Mullion	Tie
Bracing	Fabrication	Operations	Triad
Bridging truss	Family member	Paint	Truss
Calculations	Fire alarms	Partition layout	Vestibule
Carpet	Fireproofing	Photos	Vibration
Ceilings	Fire spread	Pipes	(Walls)
Chillers	Flammability	Plumbing	Water supply
Cladding	Floor	Probability, uncertainty	Weather
Collapse	Floor load	Reinforcing (strengthening)	Weight
Columns	Floor slab	Renovation	Weld size
Communication systems	Floor system	Repair	Wind
Composite truss	Floor trusses	Safety	Windows
Computer output	Foundations	Security system	Yield strength
Computer program	Frame	Shear knuckle	
Concrete	Frame analysis	Shear test	Add
(Connections)	Frequency	Shop drawings	
Construction	Fuel	Shortening	
Contract	Furniture layout	Slurry wall	
Core beams	Generators	Smoke control	
Core columns	Guidelines	Smoke test	
Dampers	Gypsum board	Spandrel beam	
Debris	Hat truss	Specifications	

WTCI-540-LERA

WORTHINGTON, SKILLING, HELLE & JACKSON — Civil & Structural Engineers

PROJECT: THE WORLD TRADE CETER | TITLE: EXTERIOR WALL - 107 to 110 - NOTES & INDEX | DATE: 4-12-67

REVISIONS
11-7-67
Printed 1-3-69
2-3-69
3-3-69
4-1-69
Printed 5-1-69
8-15-69
12-15-69
8-5-70R

NOTES

1. See Key Plan, this sheet for locations of wall elevations. All wall elevations are viewed from the inside looking outward.
2. All wide flange column material & columns Type A&B shall be Fy42 unless otherwise noted.
3. Structural steel tubing shall be seamless and shall conform to ASTM A501.
4. All other material, including detail material, shall be Fy36 unless otherwise noted.
5. All welding shall be accomplished using E70XX low hydrogen electrodes or other equivalent approved welding process.
6. All bolts shall be Friction Type A325 unless otherwise noted.
7. All bolts are furnished by others except shipping bolts.

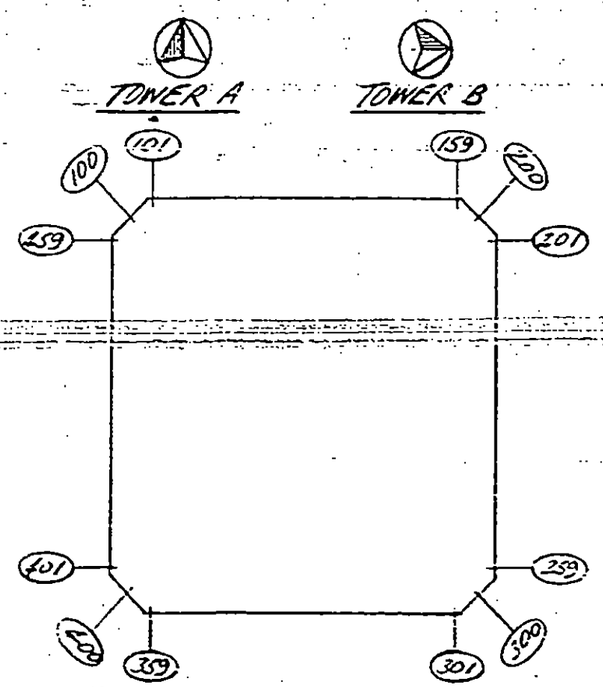

KEY PLAN

INDEX

4-AB3-1 Notes & Index
4-A3-2.1 Column & Spandrel Sched. - Tower A
2.2
2.3
2.4
4-B3-2.1 Column & Spandrel Sched - Tower B
2.2
2.3
2.4
4-AB3-3 Spandrel Splices
4-AB3-4 Typical Sections
4-AB3-5.1 Column Details
4-AB3-5.2 Column Types
4-AB3-6 Spandrel Types
4-AB3-7.1 Connections Floor 108
4-AB3-7.2 Connections Floor 108
4-AB3-7.3 Connections Floor 108
4-AB3-8.1 Connections Floor 110
4-AB3-8.2 Connections Floor 110
4-AB3-9 Corner Details
4-AB3-10 Tube Details
4-AB3-11 Exterior Wall Splice Detail - Floor 107

SKILLING HELLE CHRISTIANSEN ROBERTSON — Structural & Civil Engineers

PROJECT: THE WORLD TRADE CENTER

TITLE: EXT. WALL - 107 TO 110 - COL & SPANDREL SCH - TOWER A

DATE: 8-15-69

REVISIONS
10-23-69
12-15-69
Conn Hbs added
2-26-70
3-16-70

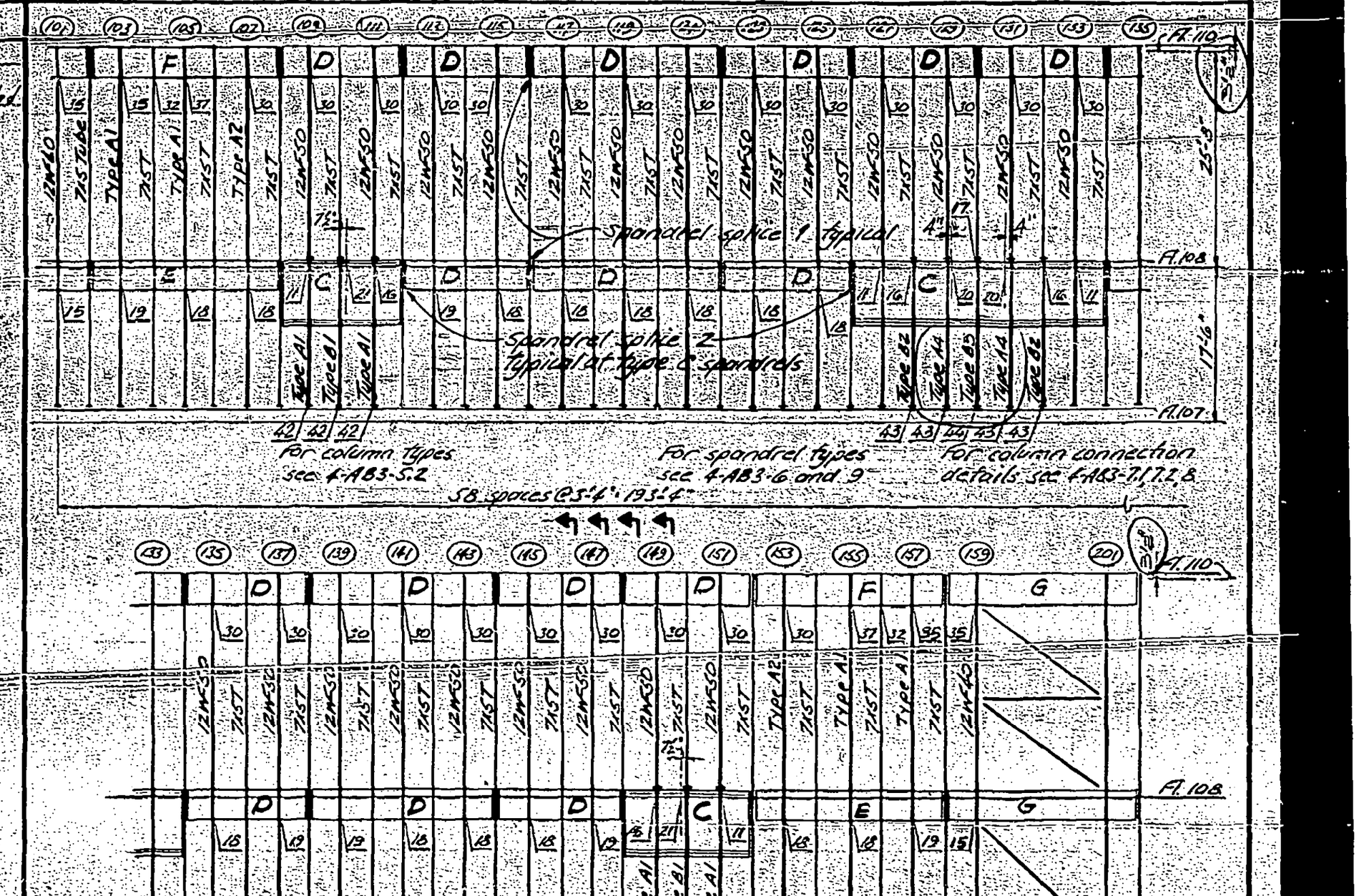

SKILLING HELLE CHRISTIANSEN ROBERTSON — Structural & Civil Engineers

PROJECT: THE WORLD TRADE CENTER

TITLE: EXT WALL-107 TO 110-COL & SPANDREL SCH.-TOWER A

DATE: 8-15-69

REVISIONS
10-23-69
12-15-69
Conn dtls added
2-26-70
3-16-70

Spandrel splice 1 typical

Spandrel splice 2
typical at type C spandrels

Typ @ nf unless otherwise noted
58 spaces @ 3'-4" = 193'-4"

Typ @ tube unless otherwise noted

for column types see 4-A83-3.2

for spandrel types see 4-A83-6 and 9

A.110

A.108

A.107

A.106

SKILLING, HELLE, CHRISTIANSEN, ROBERTSON — Structural & Civil Engineers

PROJECT: THE WORLD TRADE CENTER

TITLE: EXT. WALL - 107 TO 110 - COL & SPANDREL SCH - TOWER A

DATE: 8-15-69

REVISIONS

10-23-69

12-15-69
Conn. dtls added

2-26-70

3-16-70

Spandrel splice 1 typical

Spandrel splice 2
typical at type C spandrels

for column types
see 4-A83-5.2

for spandrel types
see 4-A83-6 and 9

for column connection
details see 4-A83-7.1, 7.2, 8

38 spaces @ 3'-4" = 126'-4"

SKILLING, HELLE, CHRISTIANSEN, ROBERTSON — Structural & Civil Engineers

PROJECT: THE WORLD TRADE CENTER

TITLE: EXT WALL - 107 TO 110 - COL & SPANDREL SCH - TOWER A

DATE: 8-15-69

REVISIONS:
10-23-69
12-15-69
Conn Hls added
2-26-70
3-16-70

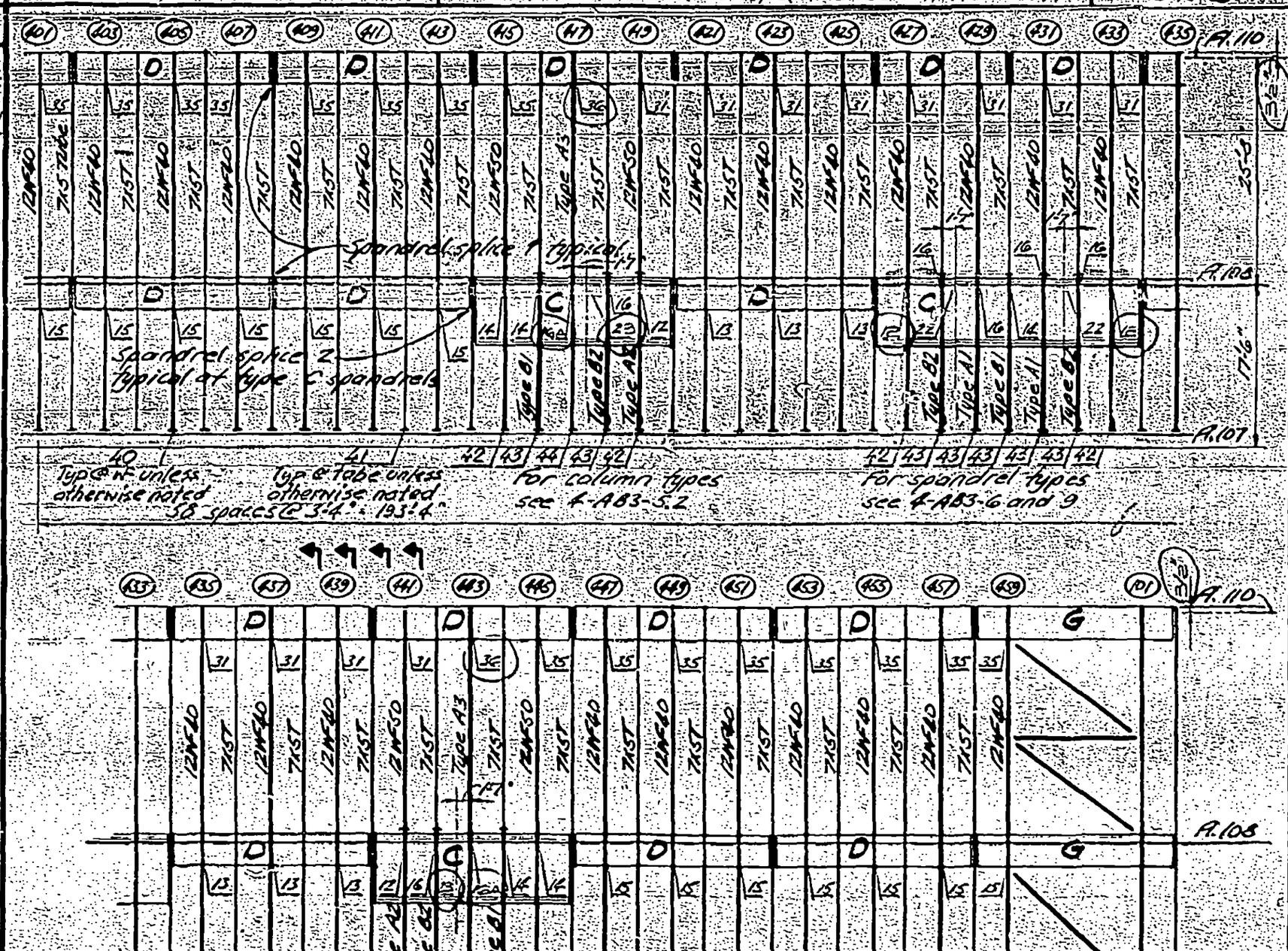

SKILLING, HELLE, CHRISTIANSEN, ROBERTSON — Structural & Civil Engineers

PROJECT: THE WORLD TRADE CENTER | TITLE: EXT WALL - 107 TO 110 - COL & SPANDREL SCH - TOWER B | DATE: 9-2-69

REVISIONS

10-23-69
12-15-69
Conn d/ls added
2-26-70
3-16-70
8-3-70

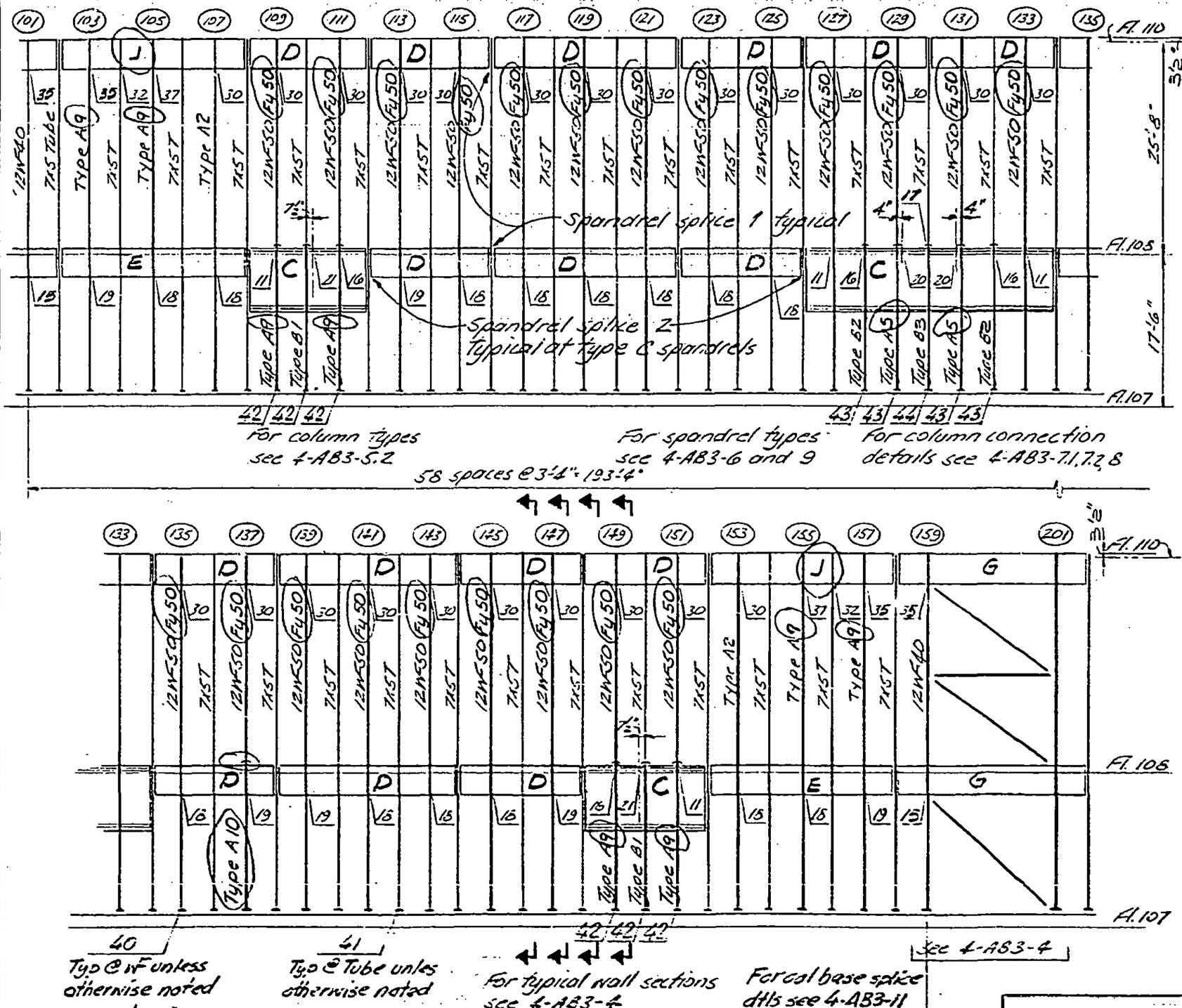

DESIGNED J.H.
DRAWN J.A.
REVIEWED

SKILLING, HELLE, CHRISTIANSEN, ROBERTSON — Structural & Civil Engineers

PROJECT: THE WORLD TRADE CENTER | TITLE: EXT WALL - 107 TO 110 - COL & SPANDREL SCH - TOWER B | DATE: 9-2-69

REVISIONS

10-23-69

12-15-69
Conn d16 added

2-26-70

3-16-70

8-3-70

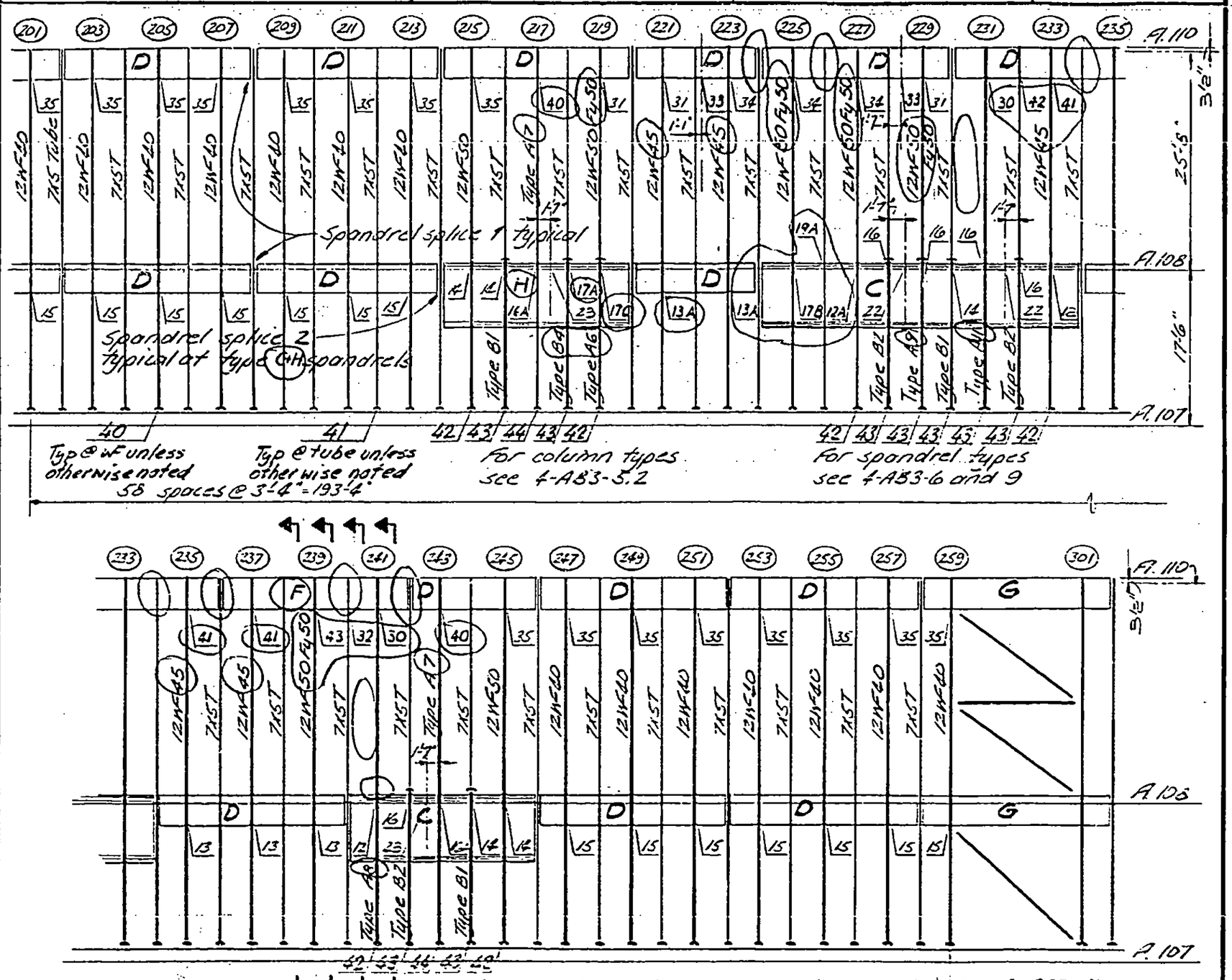

DESIGNED J.H.

DRAWN J.A.

REVIEWED

SKILLING, HELLE, CHRISTIANSEN, ROBERTSON — Structural & Civil Engineers

PROJECT: THE WORLD TRADE CENTER | TITLE: EXT WALL - 107 TO 110 - COL & SPANDREL SCH - TOWER B | DATE: 9-2-69

REVISIONS

10-23-69
12-15-69
Conn dtls added
2-26-70
3-16-70
8-3-70

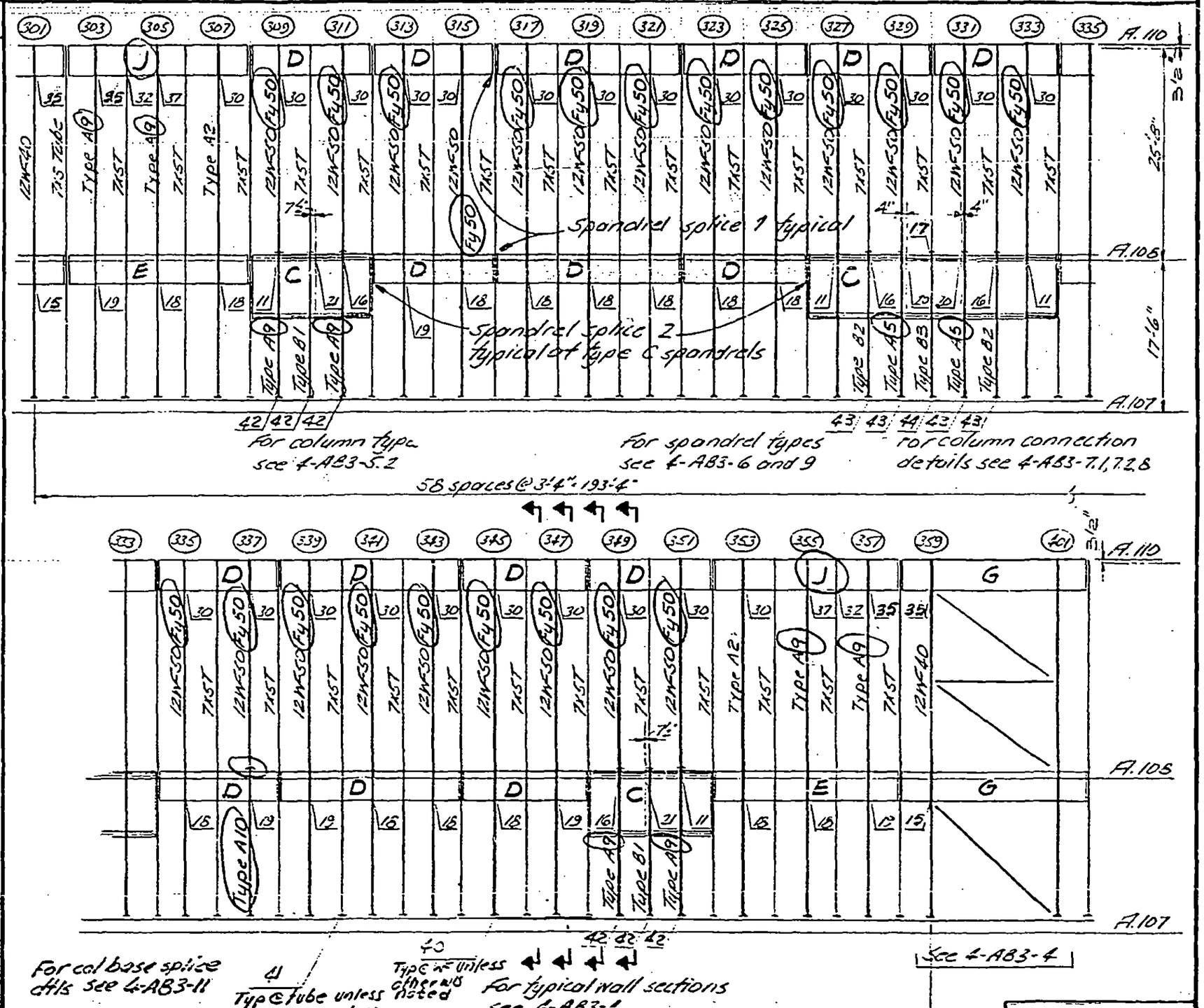

DESIGNED
DRAWN J.A
REVIEWED

SKILLING, HELLE, CHRISTIANSEN, ROBERTSON — Structural & Civil Engineers

PROJECT: THE WORLD TRADE CENTER

TITLE: EXT. WALL - 107 TO 110 - COL & SPANDREL SCH. - TOWER B

DATE: 9-2-69

REVISIONS

10-23-69

12-15-69
Conn dtls added

2-26-70

5-16-70

8-3-70

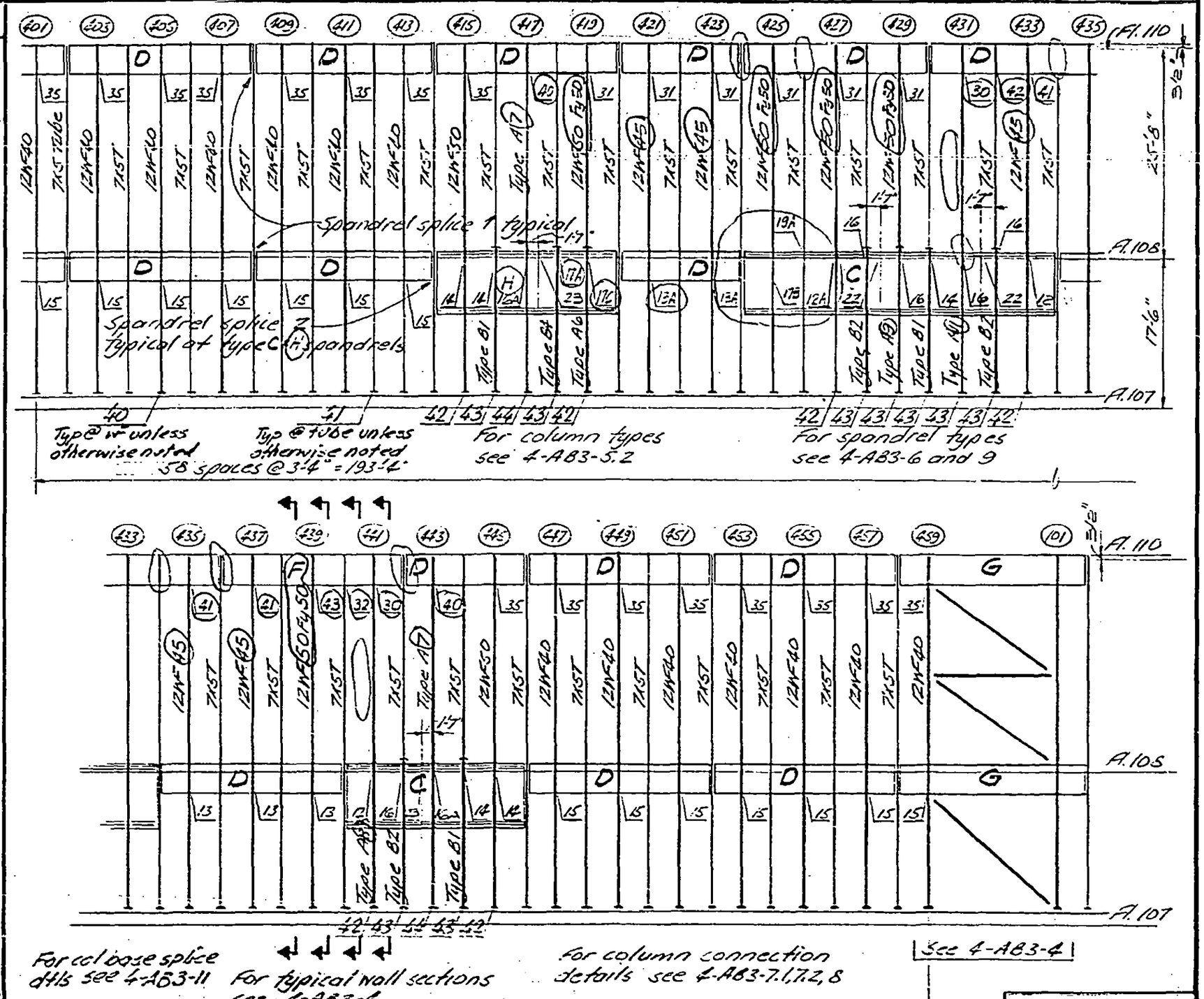

DESIGNED V.F.

DRAWN V.F.

REVIEWED

SKILLING, HELLE, CHRISTIANSEN, ROBERTSON — Structural & Civil Engineers

PROJECT: THE WORLD TRADE CENTER | TITLE: EXTERIOR WALL -107 TO 110- SPANDREL SPLICES | DATE: 8-15-69

REVISIONS

12-15-69

2-26-70

3-16-70

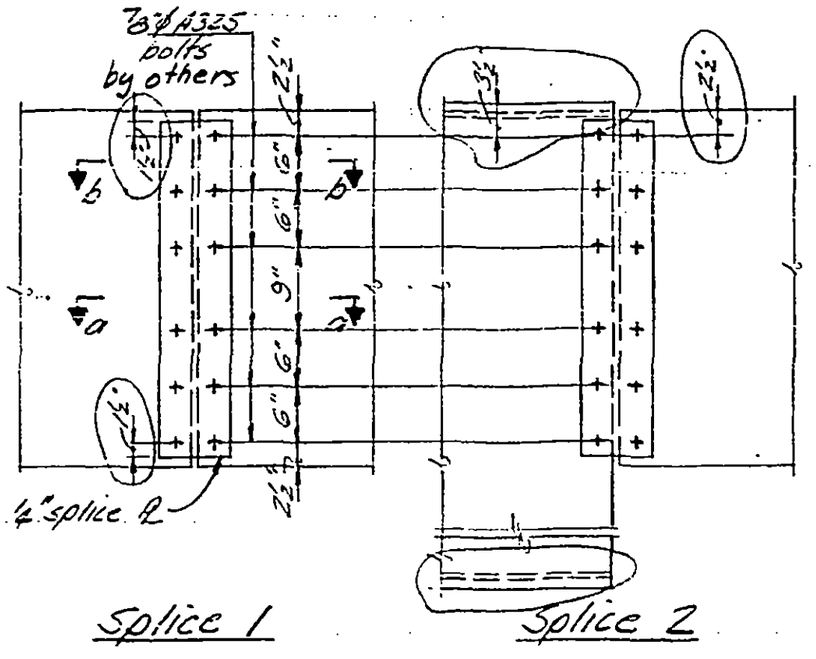

Splice 1

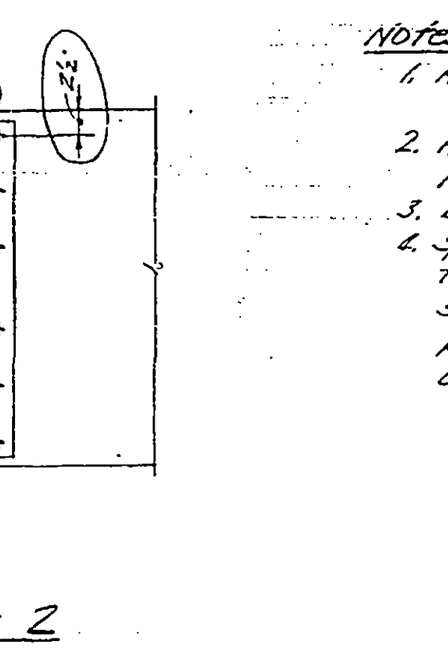

Splice 2

NOTES:

1. Holes in spandrel plates to be 1 1/16" ϕ
2. Holes in splice plates 1/16" larger than bolt diameter.
3. Bolt heads on outside face.
4. Splice plates to be shipped attached to spandrel plates with 2 shipping bolts and shall not project beyond end of spandrel during shipping.

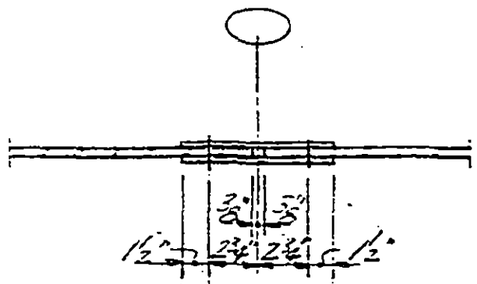

Section a-a

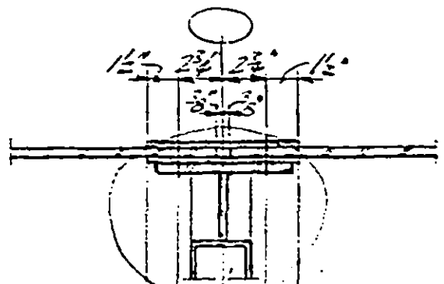

Section b-b

Where spandrels some thickness.

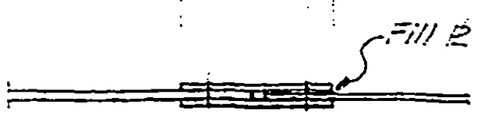

Section a-a

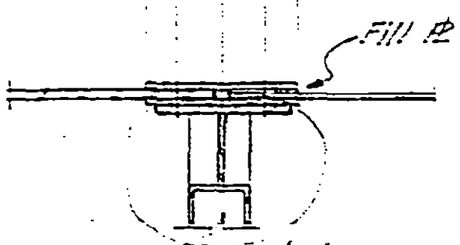

Section b-b

Where spandrel thickness varies.

4-AB3-3

WORTHINGTON, SKILLING, HELLE & JACKSON — Civil & Structural Engineers

PROJECT THE WORLD TRADE CENTER | TITLE EXTERIOR WALL - 107 TO 110 - TYPICAL ELEVATION | DATE 6-5-67

REVISIONS

8/15/69
12-15-69
2-26-70
3-16-70

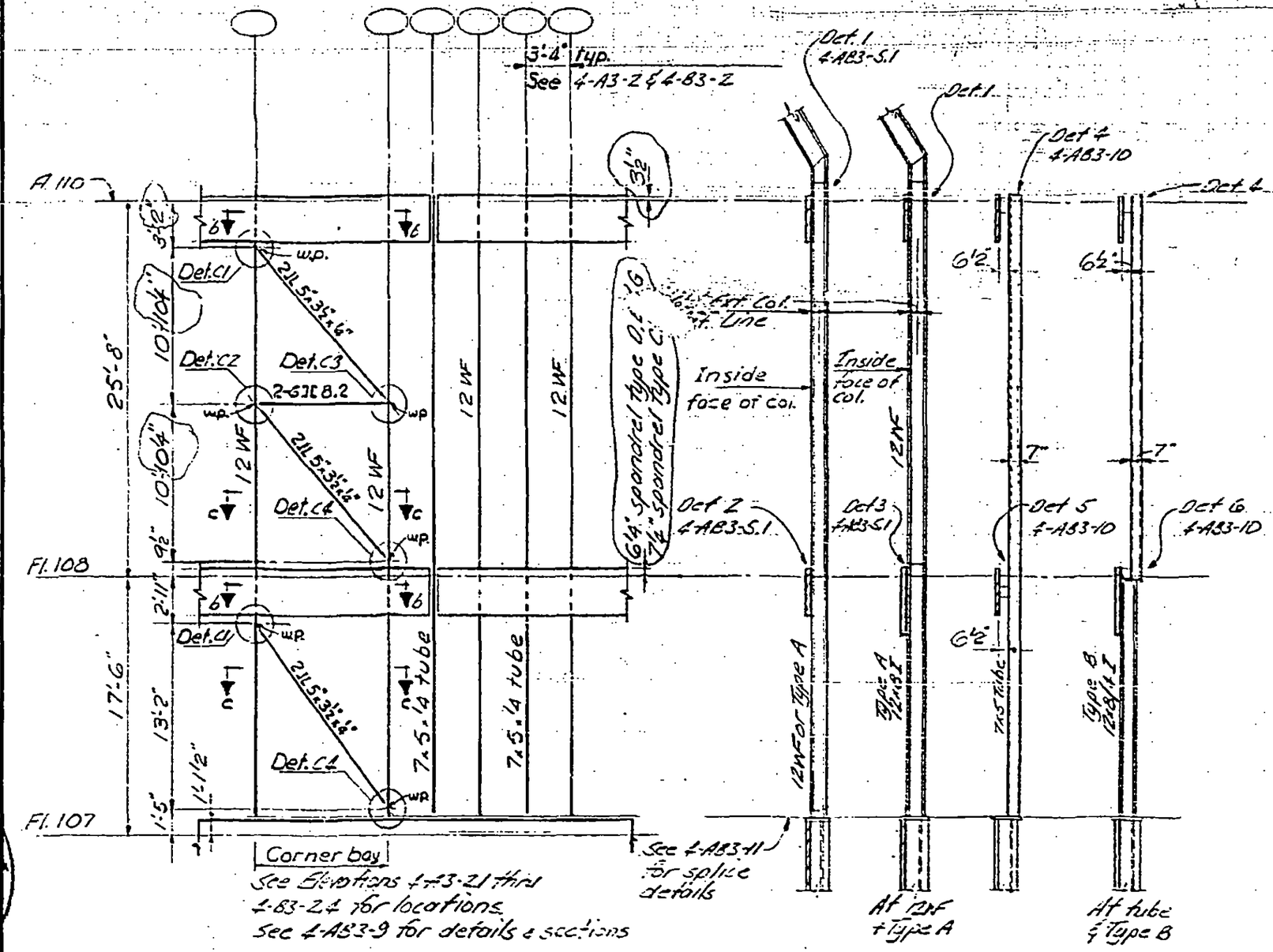

Part elevation of ext. wall

Sections through ext. wall

LESLIE E. ROBERTSON — LICENSED PROFESSIONAL ENGINEER — No. 34360 — UNIVERSITY OF THE STATE OF NEW YORK

4-AB3-4

SKILLING, HELLE, CHRISTIANSEN, ROBERTSON — Structural & Civil Engineers

PROJECT: THE WORLD TRADE CENTER | TITLE: EXTERIOR WALL -107 TO 110 - COLUMN DETAILS | DATE: 4-12-67

REVISIONS
8-15-69
12-15-69
2-26-70
3-16-70
8-3-70

DESIGNED J.H.
DRAWN J.R.

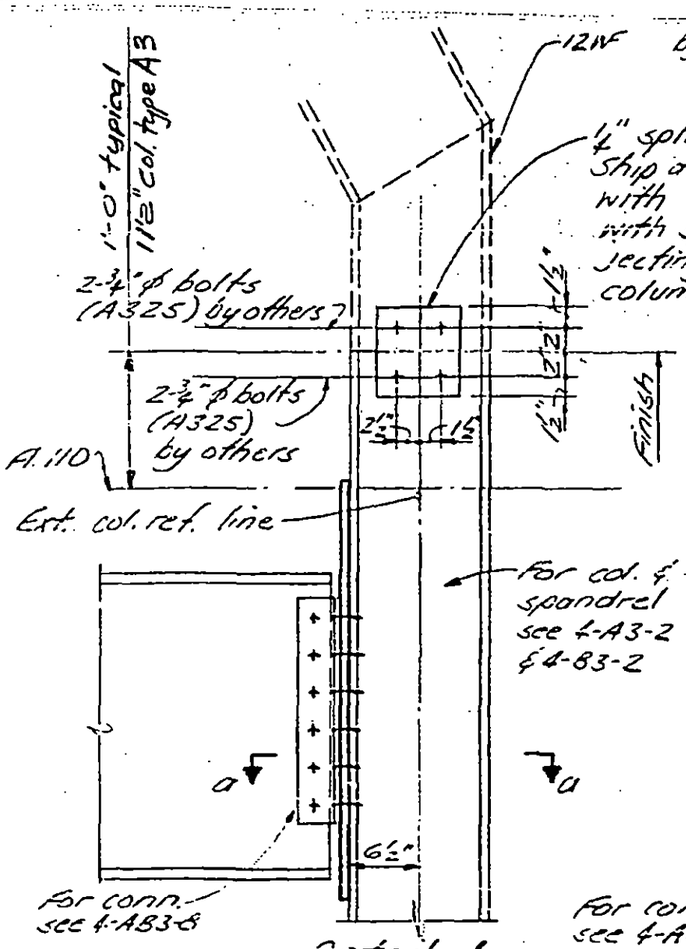

Detail 1

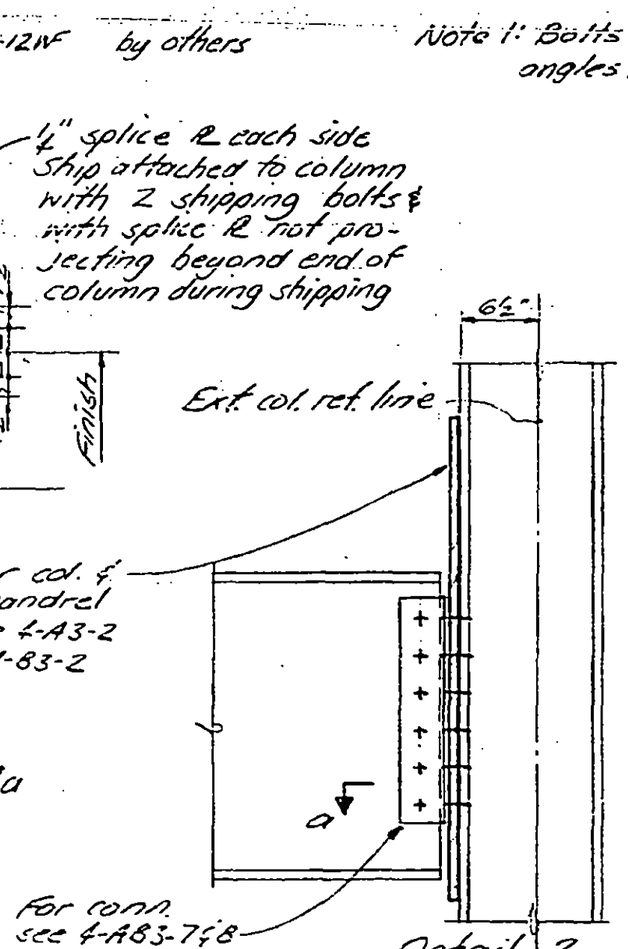

Detail 2

Note 1: Bolts and connection angles by others

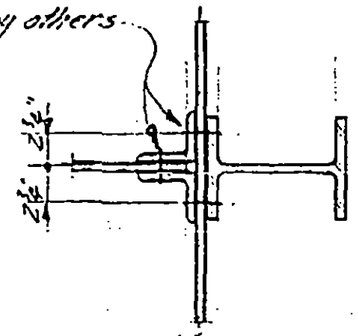

Section a-a at typical WF Column

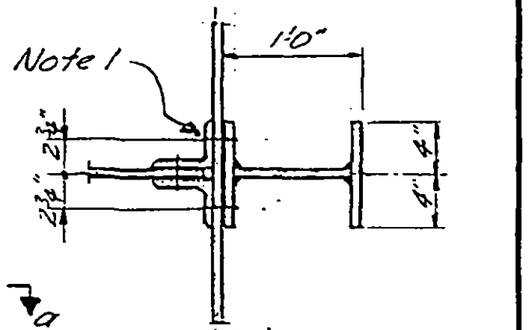

Section a-a of Column Type A1, A2, A4, A5, A6, A8, A9, A10 & A11

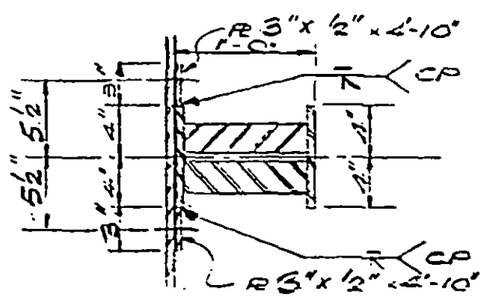

Section a-a @ Col A3 & A7

See Dwg. 4-A35-4 for locations of details.

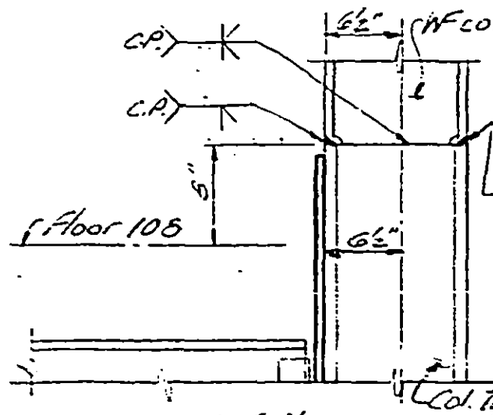

Detail 3

Col. Type A1, A2 & A4

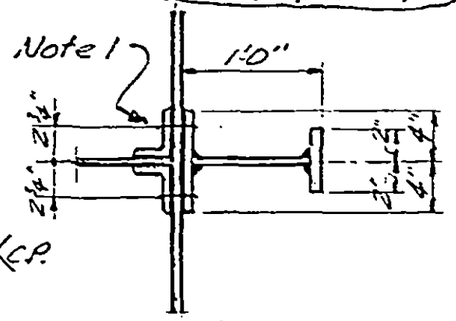

Section a-a of Column Type B1 B2 & B4

Floor 108 only

SKILLING, HELLE, CHRISTIANSEN, ROBERTSON — Structural & Civil Engineers

PROJECT: THE WORLD TRADE CENTER | TITLE: EXTERIOR WALL-107 TO 110 - COLUMN TYPES | DATE: 8/15/69

REVISIONS
12-15-69
3-16-70
4-10-70
8-3-70R

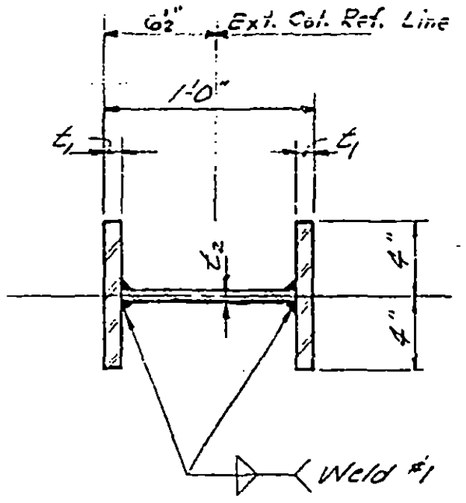

A1, A2 & A4 thru A11

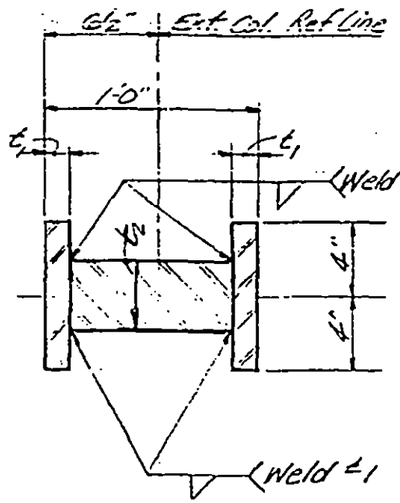

A3 & A7

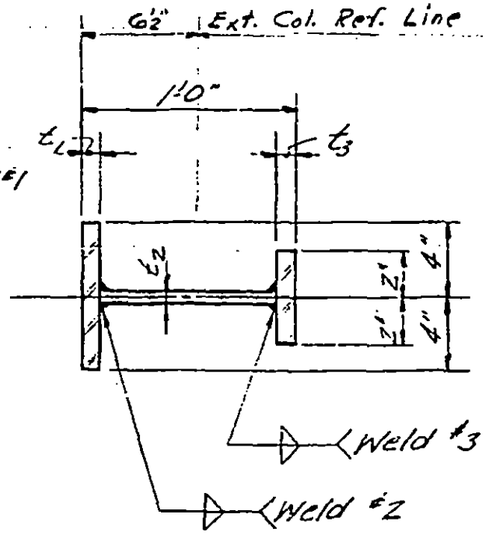

B1 thru B4

Schedule Col. Type A					
Tower	Mark	t_1	t_2	Weld #1	Fy
A & B	A1	1	1/2	5/16	42
A & B	A2	1½	¾	3/8	42
A	A3	1½	3½	½	50
A	A4	1	¾	5/16	42
B	A5	1¼	¾	5/16	42
B	A6	1¾	¾	3/8	42
B	A7	1¾	¾	½	50
B	A8	2	¾	3/8	42
B	A9	1¼	½	5/16	42
B	A10	1¼	⅜	5/16	42
B	A11	1½	½	3/8	42

Column Type A

Schedule Column Type B							
Tower	Mark	t_1	t_2	t_3	Fy	Weld #2	Weld #3
A & B	B1	1	½	1	42	5/16	5/16
A & B	B2	1½	¾	1½	42	3/8	3/8
A & B	B3	1½	¾	1½	50	3/8	3/8
B	B4	1¾	¾	1¾	50	3/8	3/8

Column Type B

See Dwgs 4-A3-2.1 thru 4-A3-2.4 and 4-B3-2.1 thru 4-B3-2.4 for locations.
See Dwg 4-AB3-1 for Index & Gen Notes.

DESIGNED J.H
DRAWN J.A.

4-AB3-S.2

SKILLING, HELLE, CHRISTIANSEN, ROBERTSON — Structural & Civil Engineers

PROJECT: THE WORLD TRADE CENTER | TITLE: EXTERIOR WALL -107 TO 110 - SPANDREL TYPES | DATE: 4-12-67

REVISIONS

8/15/69
12/15/69
3/16/70
4/10/70
8/3/70

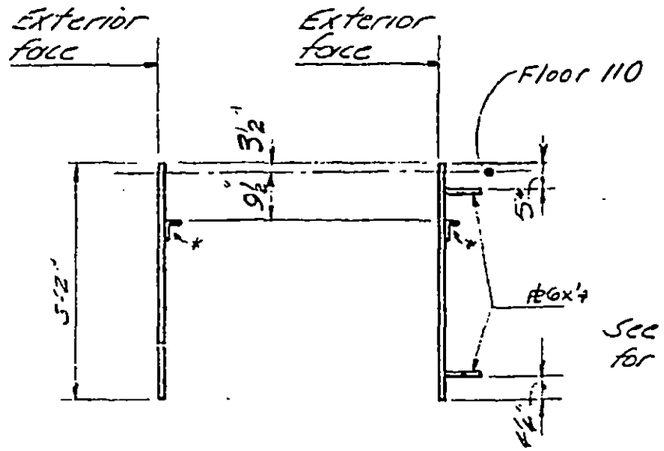

Types D, F & J

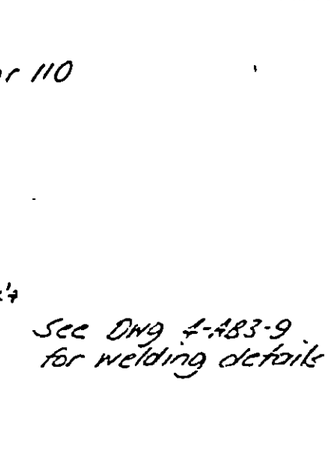

Type G

SPANOREL SCHEDULE

Type.	Depth	Thick	Fy	Remarks
C	4'-10"	3/4	36	
D	3'-2"	3/8	36	
E	3'-2"	1/2	36	
F	3'-2"	7/8	36	
G	3'-2"	3/8	36	Corner spandrel see 4-A83-9
H	4'-10"	7/8	36	
J	3'-2"	1	36	

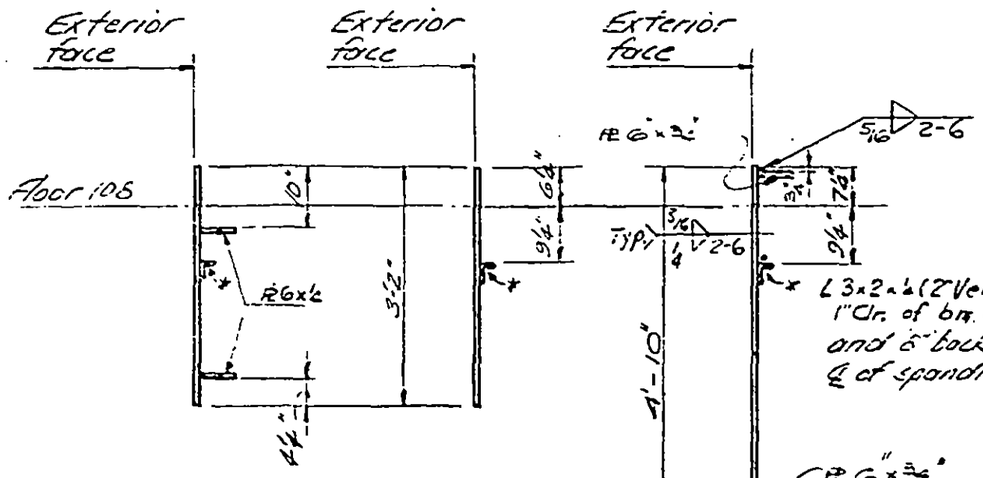

Type G — Types D & E

Type C & H

DESIGNED
DRAWN
CHECKED

SKILLING, HELLE, CHRISTIANSEN, ROBERTSON — Structural & Civil Engineers

PROJECT THE WORLD TRADE CENTER | TITLE EXTERIOR WALL CONNECTIONS - FLOOR 108 | DATE 4.12.67

REVISIONS

12-15-69
2-26-70
3-16-70
4-27-70
8-3-70

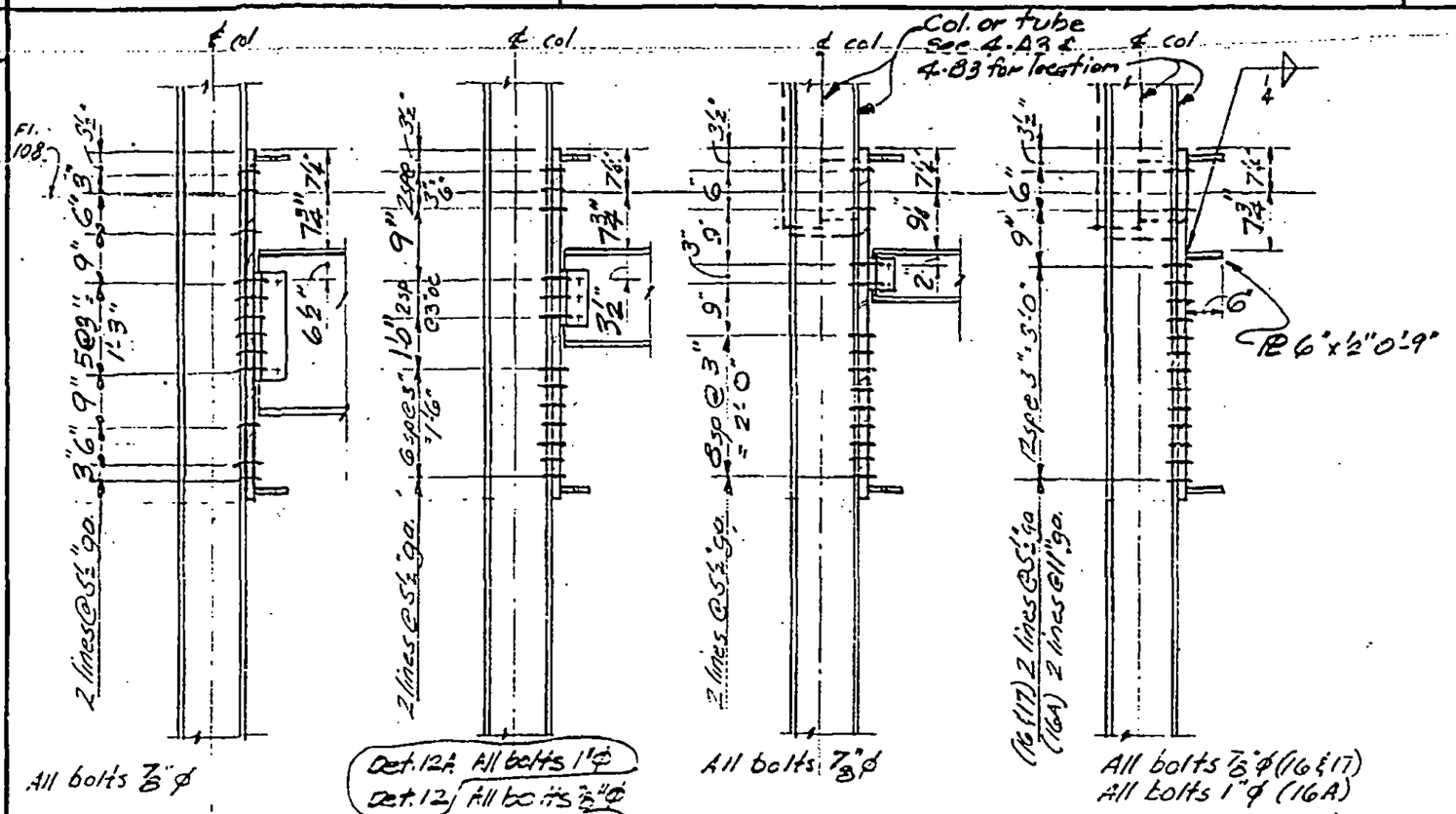

All bolts ⅞"ϕ

DETAIL 11

Det. 12A All bolts 1"ϕ
Det. 12 All bolts ⅞"ϕ

DETAIL 12 & 12A

All bolts ⅞"ϕ

DETAIL 14

All bolts ⅞"ϕ (16 & 17)
All bolts 1"ϕ (16A)

DETAILS 16, 16A & 17

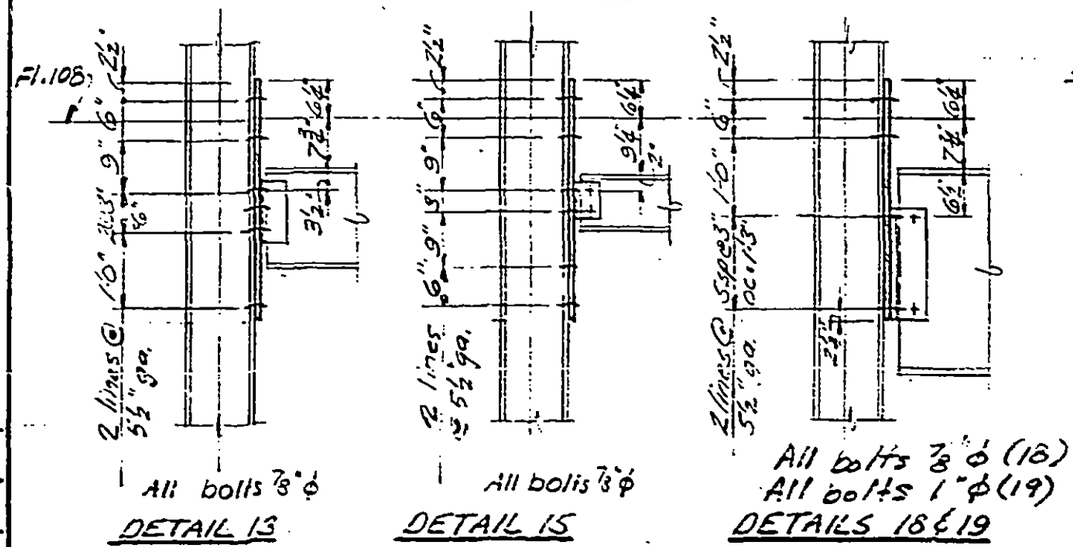

All bolts ⅞"ϕ

DETAIL 13

All bolts ⅞"ϕ

DETAIL 15

All bolts ⅞"ϕ (18)
All bolts 1"ϕ (19)

DETAILS 18 & 19

Notes:

1. Bolts, connection angles and beams by others.
2. All holes in spandrels to be 1⅛"ϕ. All holes in column connection angles and beams to be 1/16" larger than bolt diameter.
3. All bolts A325 or A490. See Drawing Book 9.

DESIGNED MB
DRAWN MB
REVIEWED

4-AB3-7.1

SKILLING, HELLE, CHRISTIANSEN, ROBERTSON — Structural & Civil Engineers

PROJECT: THE WORLD TRADE CENTER | TITLE: EXTERIOR WALL CONNECTIONS - FLOOR 108 | DATE:

REVISIONS

2-26-70
3-16-70
4-27-70

-All bolts 1" ø unless otherwise noted.
-See Notes on 4-AB3-7.1

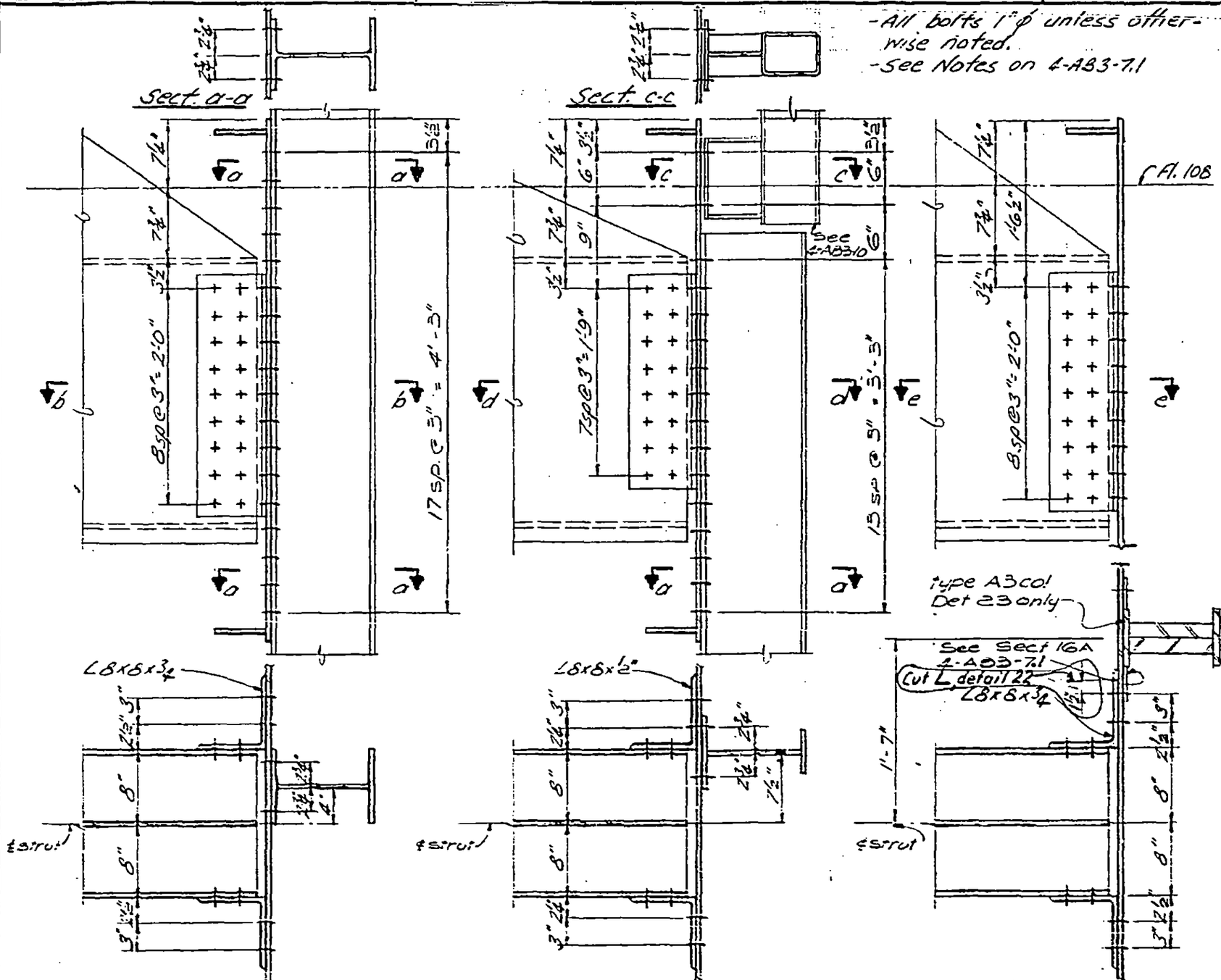

Section b-b
Detail 20

Section d-d
Detail 21

Section e-e
Detail 22 & 23

4-AB3-7.2

LICENSED PROFESSIONAL ENGINEER — LESLIE E. ROBERTSON — No. 34360 — UNIVERSITY OF THE STATE OF NEW YORK

DESIGNED

DRAWN

SKILLING, HELLE, CHRISTIANSEN, ROBERTSON — Structural & Civil Engineers

PROJECT: THE WORLD TRADE CENTER | TITLE: EXTERIOR WALL CONNECTIONS: FLOOR 108 | DATE: 8-3-70

REVISIONS

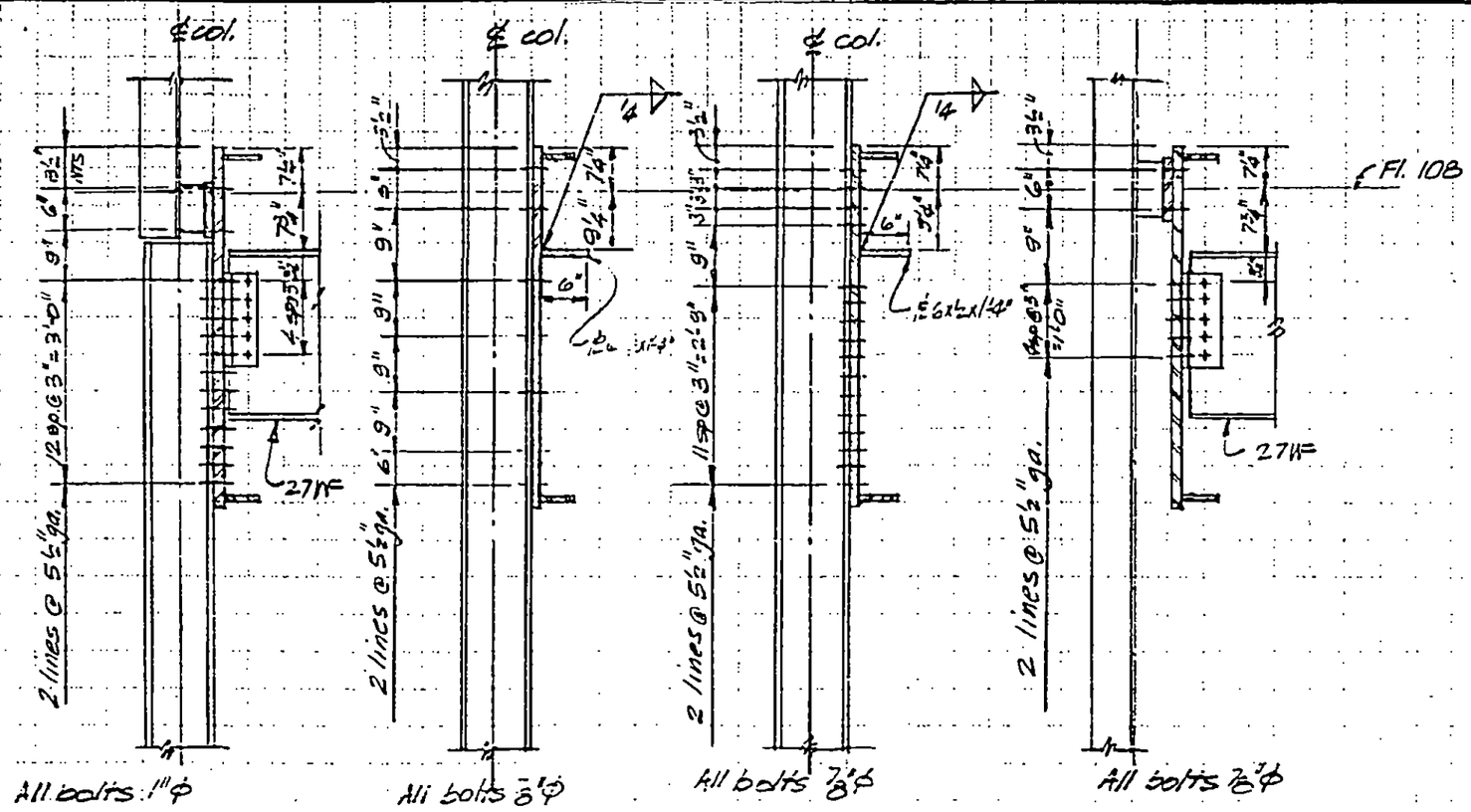

DETAIL 17A | DETAIL 17B | DETAIL 17C | DETAIL 19A

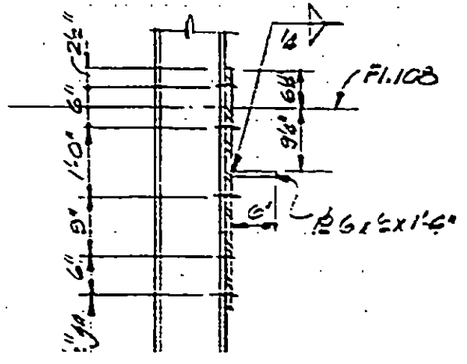

Notes:

1. Bolts, connection angles and beams by others.
2. All holes in spandrels to be 1 1/16" ϕ. All holes in column connection angles and beams to be 1/16" larger than bolt diameter.
3. All bolts A325 or A490. See Drawing Book 9.

LICENSED PROFESSIONAL ENGINEER — LESLIE E. ROBERTSON — NEW YORK

SKILLING, HELLE, CHRISTIANSEN, ROBERTSON — Structural & Civil Engineers

PROJECT THE WORLD TRADE CENTER | TITLE EXTERIOR WALL CONNECTIONS - FLOOR 110 | DATE 4-12-67

REVISIONS

12/15/69
2-26-70
3-16-70
8-3-70

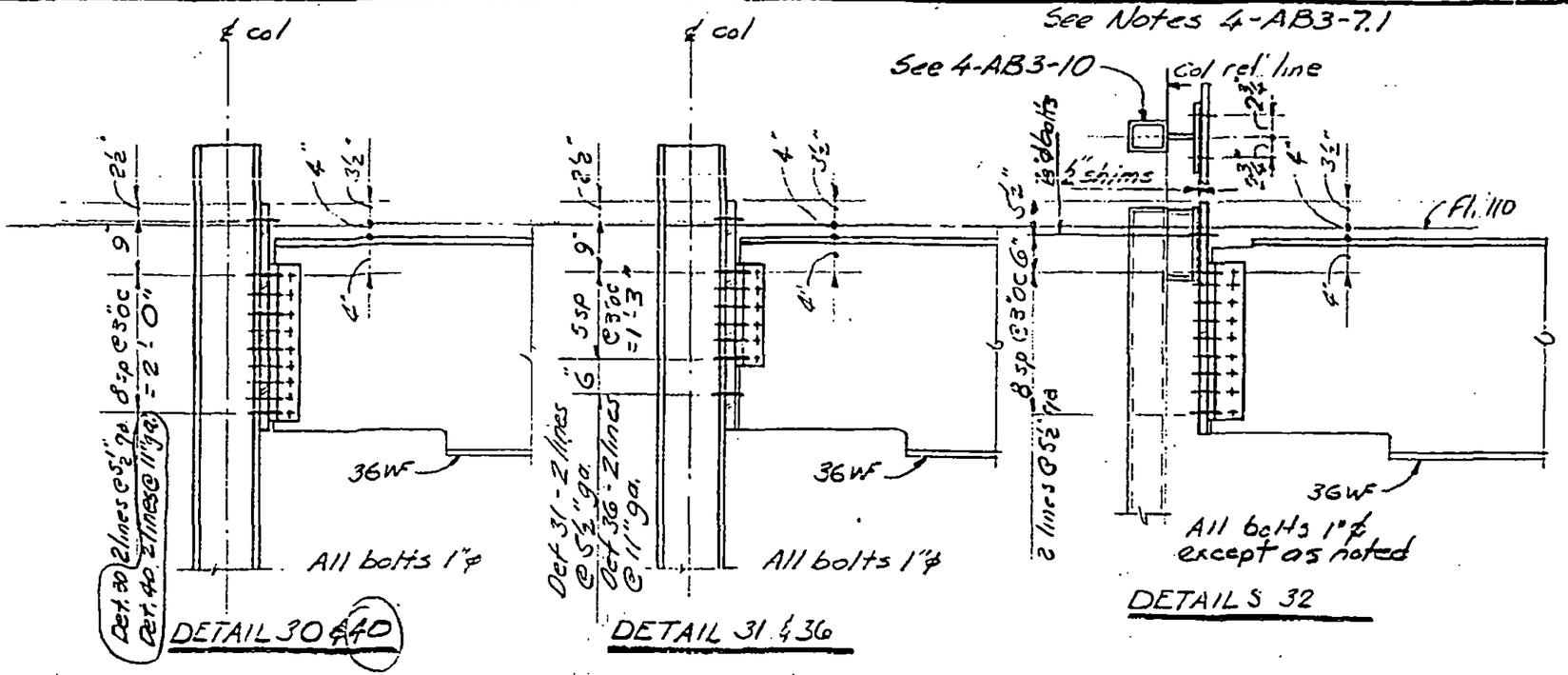

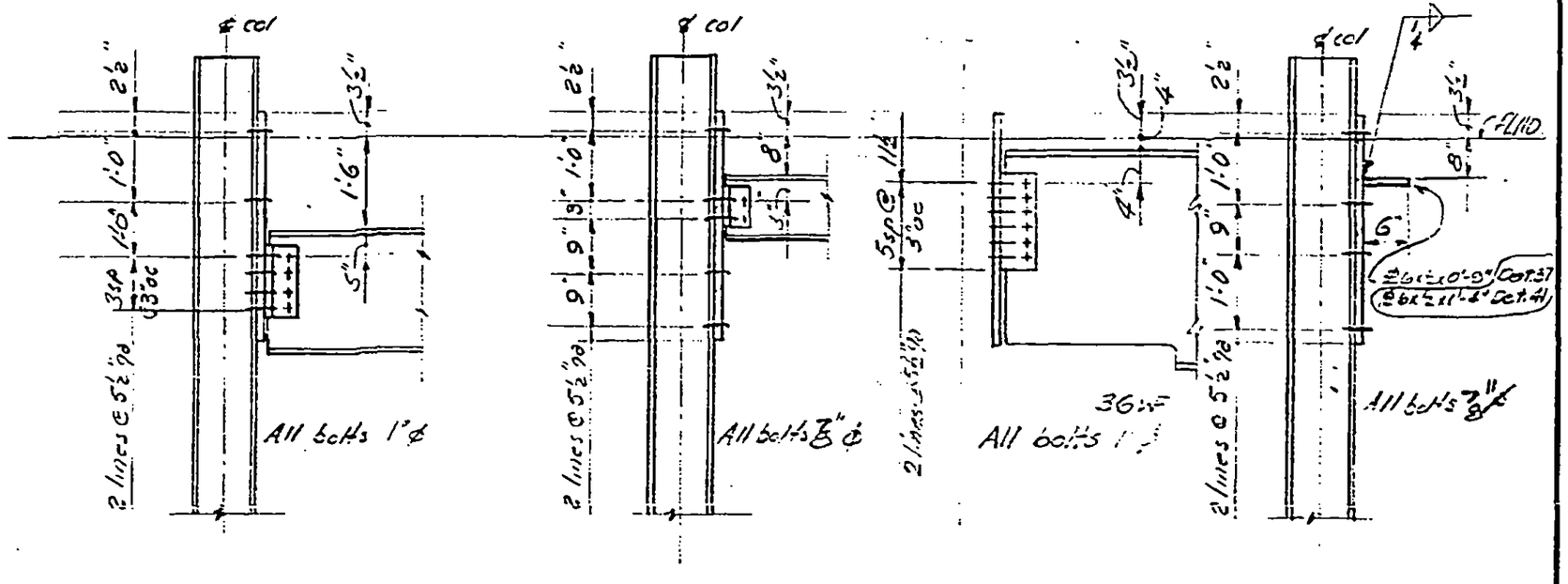

DESIGNED IRB
DRAWN IRB
REVIEWED

4-AB3-8.1

SKILLING, HELLE, CHRISTIANSEN, ROBERTSON — Structural & Civil Engineers

PROJECT THE WORLD TRADE CENTER | TITLE EXTERIOR WALL CONNECTIONS - FLOOR 110 | DATE 8-3-70

REVISIONS

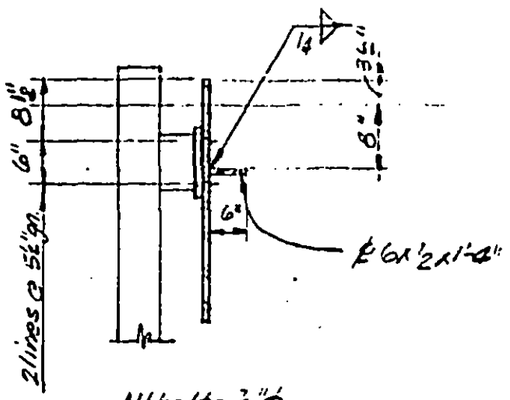

All bolts ⅞"Φ

DETAIL 42

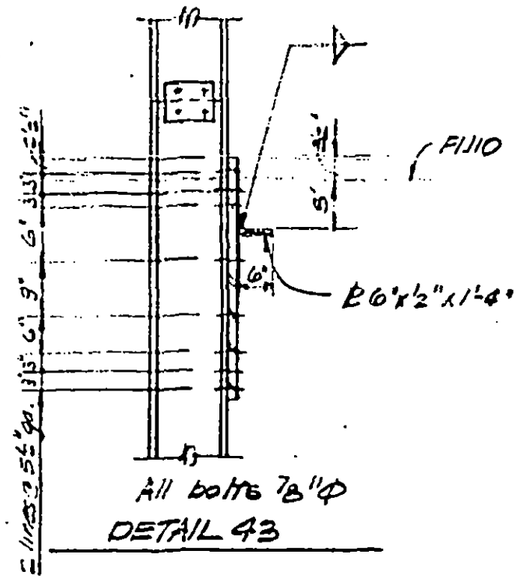

All bolts ⅞"Φ

DETAIL 43

LICENSED PROFESSIONAL ENGINEER
LESLIE E. ROBERTSON
No 34300
UNIVERSITY OF THE STATE OF NEW YORK

CHKD

DRAWN

REVIEWED

4-A53-8.2

WORTHINGTON, SKILLING, HELLE & JACKSON — Civil & Structural Engineers

PROJECT: THE WORLD TRADE CENTER | TITLE: EXTERIOR WALL - 107 to 110 - CORNER DETAILS | DATE: 4-12-67

REVISIONS
8-15-69
12-15-69
2-26-70
4-10-70

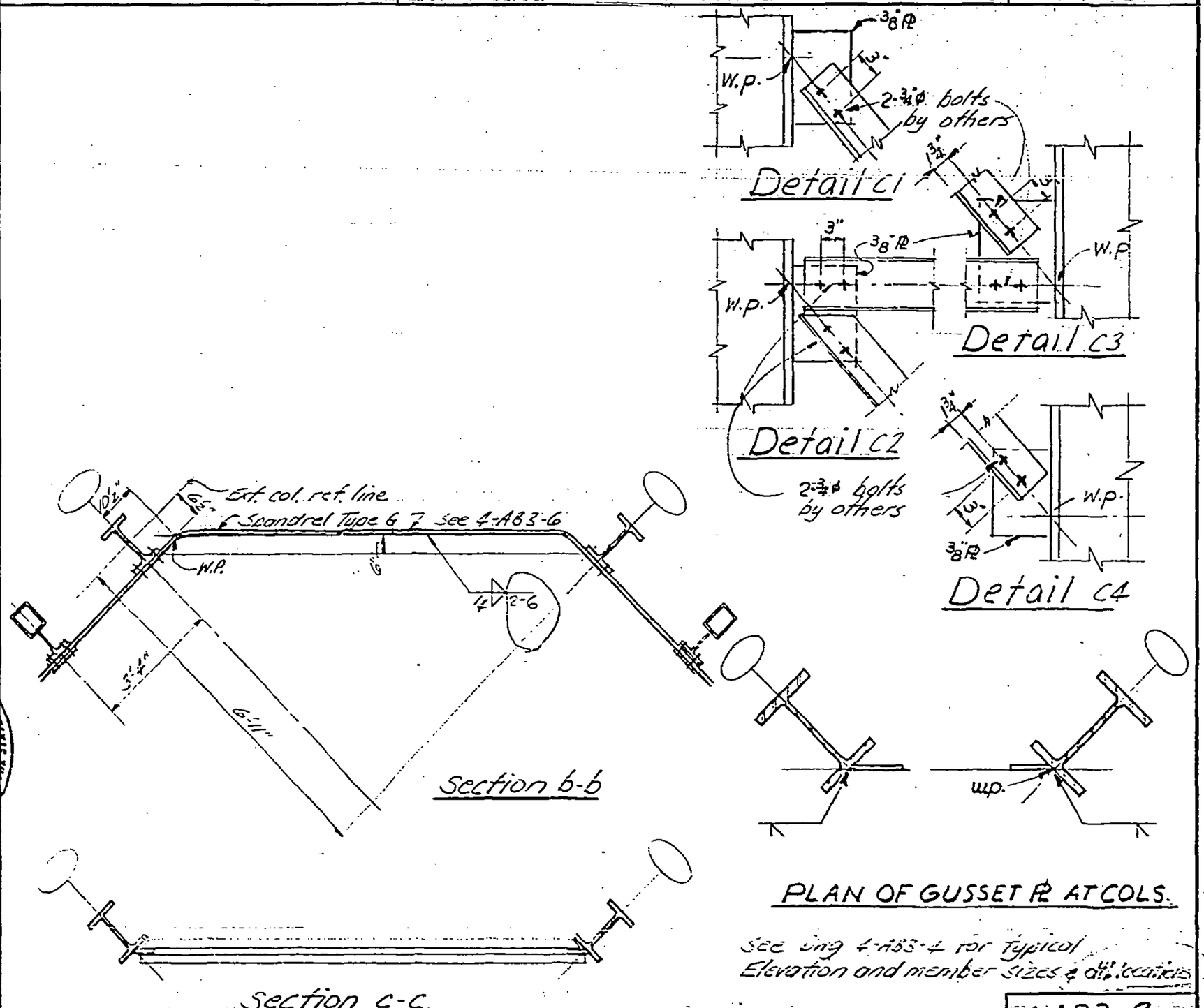

PLAN OF GUSSET PL AT COLS.

See dwg 4-AB3-4 for typical Elevation and member sizes & dir. locations

4-AB3-9

LICENSED PROFESSIONAL ENGINEER LESLIE E. ROBERTSON No. 34360 STATE OF NEW YORK

SKILLING, HELLE, CHRISTIANSEN, ROBERTSON — Structural & Civil Engineers

PROJECT: THE WORLD TRADE CENTER

TITLE: EXTERIOR WALL -107 TO 110 - TUBE DETAILS

DATE: 4-12-67

REVISIONS

8/15/69
12/15/69
2-26-70
3-16-70
4-27-70

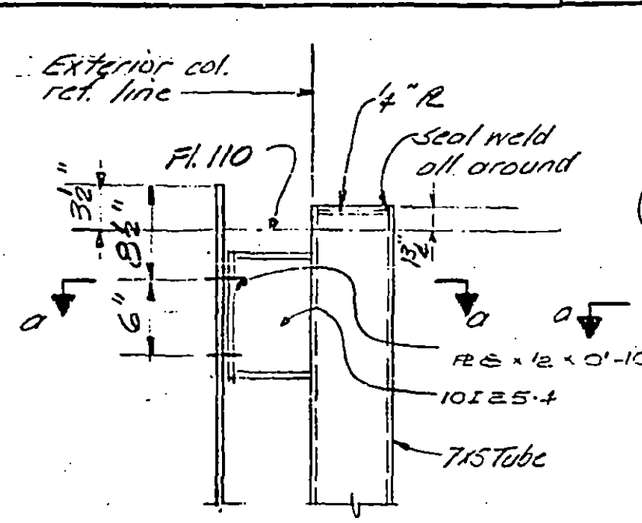

Detail 4

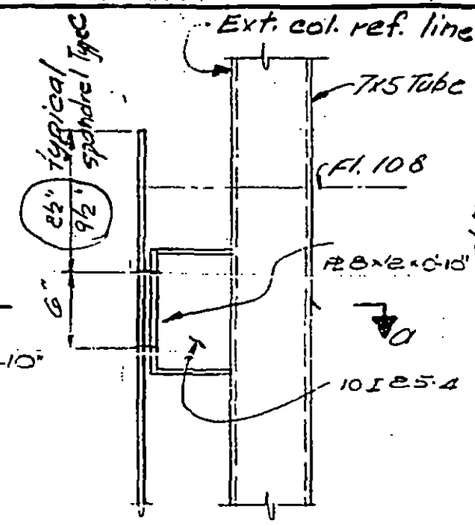

Detail 5

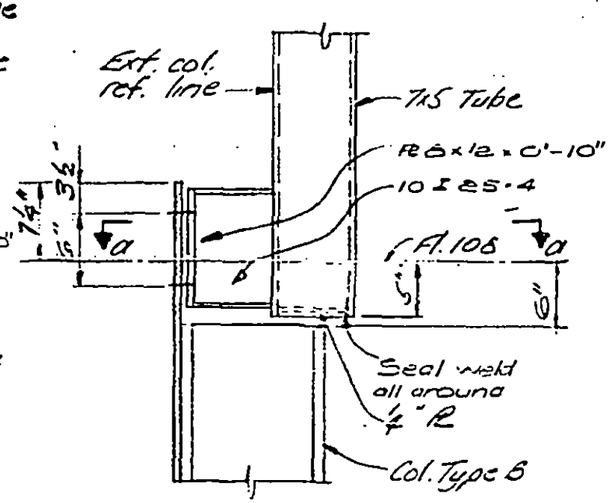

Detail 6

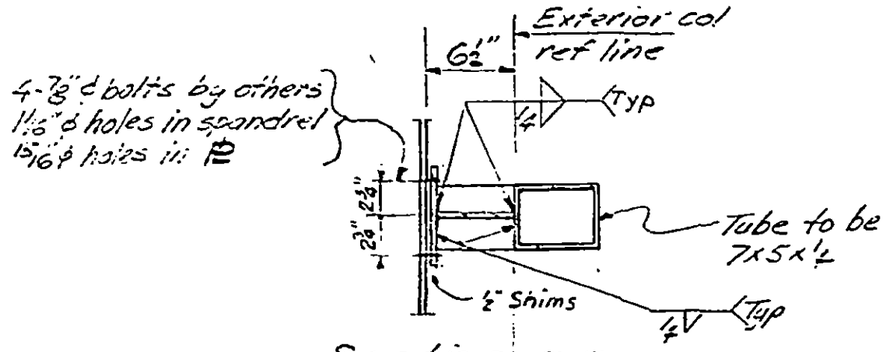

Section a-a

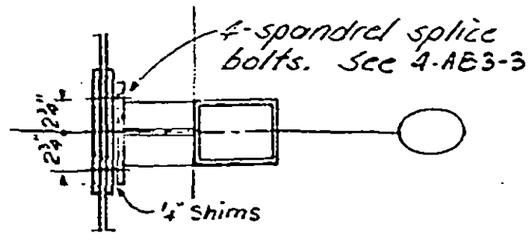

Section a-a
of Spandrel Splice

DESIGNED J.H

DRAWN J.I

4-AE3-12

SKILLING, HELLE, CHRISTIANSEN, ROBERTSON — Structural & Civil Engineers

PROJECT: THE WORLD TRADE CENTER | TITLE: EXTERIOR WALL SPLICE DETAIL - FLOOR 107 | DATE: 12-15-69

REVISIONS

2-26-70
3-16-70
8-3-70R

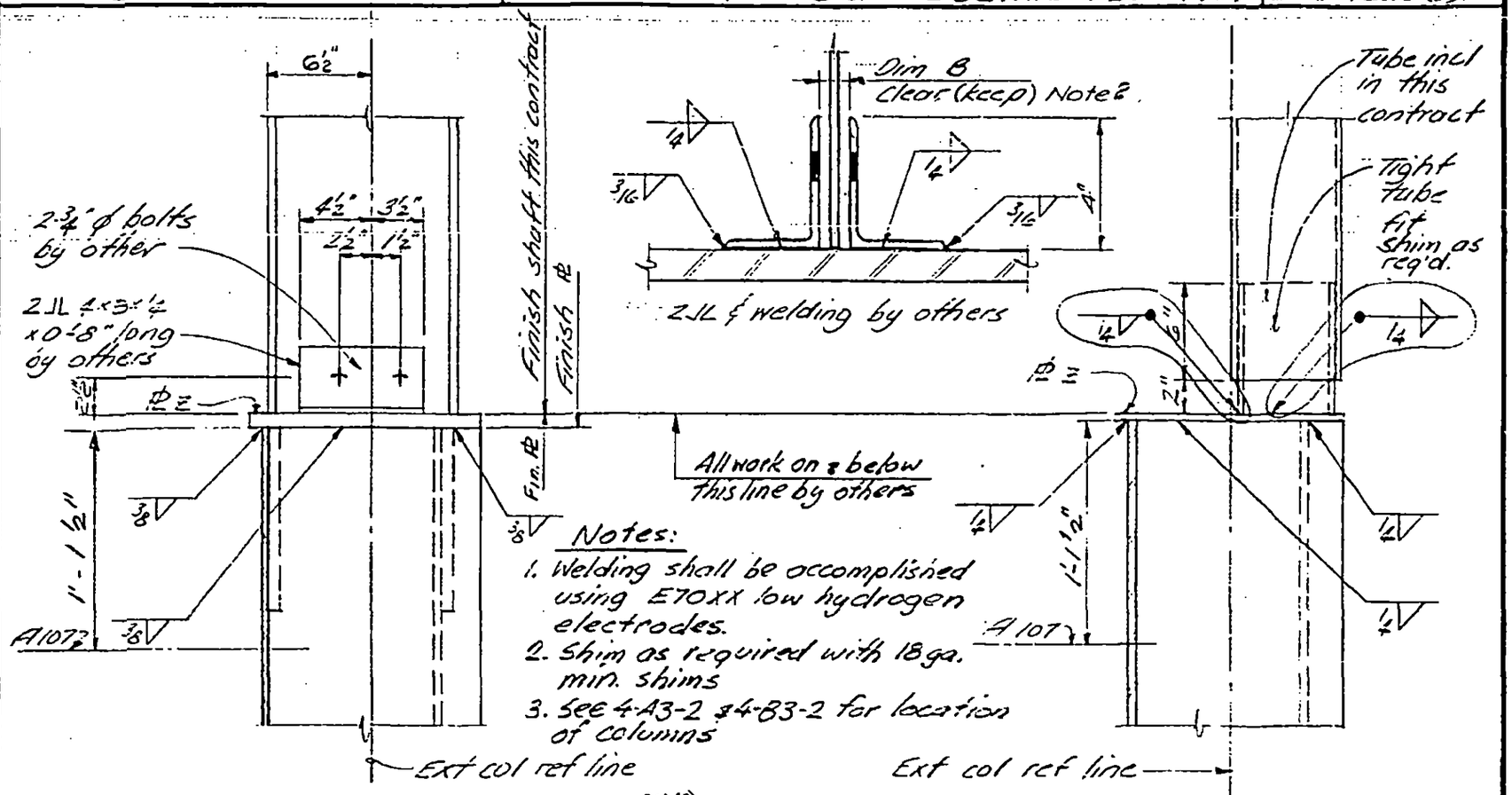

Notes:
1. Welding shall be accomplished using E70XX low hydrogen electrodes.
2. Shim as required with 18 ga. min. shims
3. See 4-A3-2 & 4-B3-2 for location of columns

Detail 40 @ WF & Type A & B

Detail 41 @ 7×5 Tube

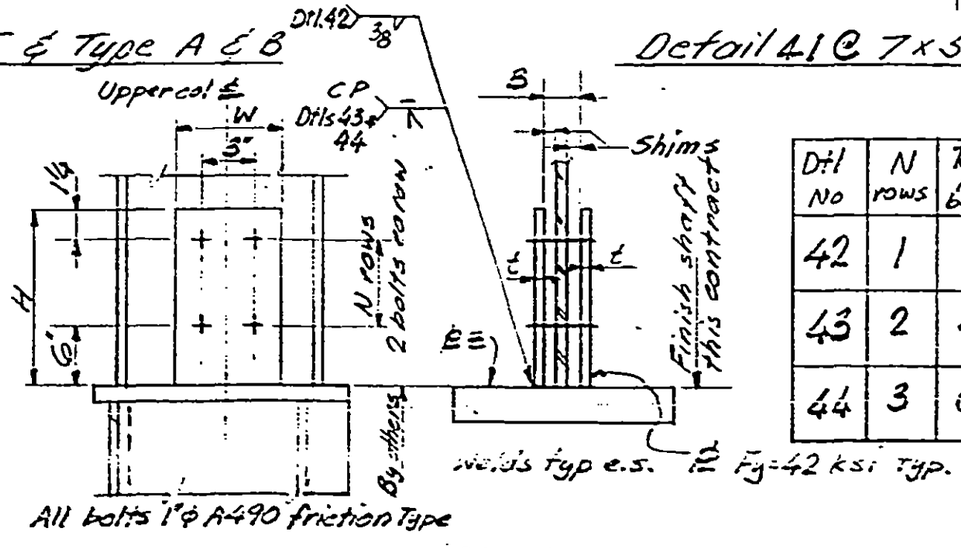

Col. Type	Dim. B	℞ & ℄
Type A1 (A2 & A11)	5/8"	1"
Type A2 (A3 & A5)	7/8"	1½"
Type A3 & (A7)	4"	1½"
Type (A4 & A5)	7/8"	1"
(Type A10)	½"	1"
Type B1	5/8"	1"
Type B2, B3 (B4)	7/8"	1½"
7×5 Tube	—	4"
12 WF 40-50	½"	1"

Dtl No	N rows	Tot. No bolts	W	H	t
42	1	2	8	7¼	⅜
43	2	4	8	1'-3"	⅝
44	3	6	5¾	1'-4"	1¼

DESIGNED: J.F.
DRAWN: J.H.
REVIEWED: