WTCI-709-LERA

DB06

DOCUMENT DATA FORM

Your Name: FS

Document Title or Description (max. 254 characters): Circle: Same as cover (or fill in below)

Index to drawing book 4

Include work order no. and floor no. if applicable

Roll # (e.g., CORR-4): DB06	Doc. ID (report #, dwg. #):	
Document Date:	Document Author Name:	Author Organization:

KEYWORDS – HIGHLIGHT ALL THAT APPLY

Level 1

Bankers Trust	Project 6	WTC 4 - South Plaza Bldg.
Concourse	Project 7	WTC 5 - North Plaza Bldg.
Electrical Substation	Project 8	WTC 6 - Customs House
Liberty Plaza	WFC 1 - Oppenhiemer Dow	WTC 7
PATH Station	WFC 2 - Tower B	WTC Complex
Project 1	WFC 3 - American Express	WTC Plaza
Project 2	WFC 4 - Tower D	
Project 3	WTC 1 - North Tower	Add
Project 4	WTC 2 - South Tower	
Project 5	WTC 3 - Marriot Hotel	

Level 2

Accident analysis & risk	Fire protection	Police	Add
Architectural	Fire service	Security	
Data request	Management	Structural	
Emergency management	Mech./elec.	Tenant alterations	
Evacuation	News coverage		

Level 3

1993 explosion	Deflection	Human comfort	Smoke control
A/E fitout	Demolition	HVAC	Smoke test
A-242	Design	Index	Spandrel beam
A-36	Detailing	Inspection	Specifications Splices
A-497	Doors	Insulation	Sprinkler
Air cooled condensers	Drawings	Job number	Stability
Analysis	Eastern States Steel	Joist	Stairways
Angles	Egress	L-50	Standards
Antenna	Elevator	Lighting	Steel
Artifacts	Emergency communications	Loads	Steel composition
Asbestos	Equipment	Maintenance	Stiffness
Beams	Erection marks	Marking	Structural review
Bow tie	Escalator	Mesh reinforcement	Survivor
Bracing	Expansion joint	Mill inspection	Tenant list
Bridging truss	Exterior columns	Model	Testing
Calculations	Fabrication	Mullion	Tie
Carpet	Family member	Operations	Tolerances
Ceilings	Field survey	Paint	Triad
Certification	Fire alarms	Partition layout	Truss
Chillers	Fireproofing	Photos	Vestibule
Cladding	Fire spread	Pipes	Vibration
Collapse	Flammability	Plumbing	Walls
Columns	Floor	Probability, uncertainty	Water supply
Communication systems	Floor load	Quality control	Weather
Composite truss	Floor slab	Reinforcing (strengthening)	Weight
Computer output	Floor system	Renovation	Weld detail
Computer program	Floor trusses	Repair	Weld size
Concrete	Foundations	Research & Development	Welding
Connections	Fracture	Roof	Wind
Construction	Frame	Safety	Windows
Contract	Frame analysis	Schedule	Yield strength
Core beams	Frequency	Sculpture	
Core columns	Fuel	Security system	Add
Cranes	Furniture layout	Shear knuckle	
Criteria	H Generators	Shear test	
Dampers	Guidelines	Shop drawings	
Debris	Gypsum board	Shortening	
Deck	Hat truss	Slurry wall	

WTCI-709-LERA

WORTHINGTON, SKILLING, HELLE & JACKSON — Civil & Structural Engineers

PROJECT: THE WORLD TRADE CENTER | TITLE: DRAWING BOOK 4 | DATE:

REVISIONS

4-A1-
Panel Schedules - Tower A

4-B1-
Panel Schedules - Tower B

4-AB2-
Panel Details Tower A&B
(See 4-AB2-1 for index)

4-AB3-
Schedules and Details
Floor 110 to 107
(See 4-AB3-1 for index)

709-L

SKILLING, HELLE, CHRISTIANSEN, ROBERTSON — Structural & Civil Engineers

PROJECT	TITLE	DATE
THE WORLD TRADE CENTER	EXTERIOR WALL - PANEL SCHEDULES AND DETAILS	11/26/71

REVISIONS

4-AB0- 0	11/26/71	4-A1 -209	12/ 5/67	4-A1 -380	6/ 5/67	4-B1 - 30		4-B1 -209	5/14/69
4-AB0- 0.1	11/26/71	4-A1 -210	6/ 5/67	4-A1 -381	12/ 5/67	INCL.	10/18/68	4-B1 -210	6/21/67
4-AB1- 1	5/ 1/69	4-A1 -211	6/ 5/67	4-A1 -382	6/ 5/67	4-B1 - 31		4-B1 -211	6/21/67
4-A1 - 2		4-A1 -212	12/ 5/67	4-A1 -383	12/ 5/67	THRU		4-B1 -212	5/14/69
THRU		4-A1 -213	6/ 5/67	4-A1 -384	6/ 5/67	4-B1 -164		4-B1 -213	6/21/67
4-A1 -165		4-A1 -214	12/ 5/67	4-A1 -385	6/ 5/67	INCL.	6/21/67	4-B1 -214	5/14/69
INCL.	6/ 5/67	4-A1 -215		4-A1 -386	12/ 5/67	4-B1 -165	5/14/69	4-B1 -215	
4-A1 -166	12/ 5/67	THRU		4-A1 -387	6/ 5/67	4-B1 -166	12/ 5/67	THRU	
4-A1 -167	12/ 5/67	4-A1 -339		4-A1 -388	12/ 5/67	4-B1 -167	12/ 5/67	4-B1 -320	
4-A1 -168	12/ 5/67	INCL	6/ 5/67	4-A1 -389		4-B1 -168	12/ 5/67	INCL	6/21/67
4-A1 -169	12/ 5/67	4-A1 -340	12/ 5/67	THRU		4-B1 -169	12/ 5/67	4-B1 -321	5/14/69
4-A1 -170	12/ 5/67	4-A1 -341	12/ 5/67	4-A1 -484		4-B1 -170	12/ 5/67	4-B1 -322	5/14/69
4-A1 -171	12/ 5/67	4-A1 -342	12/ 5/67	INCL	6/ 5/67	4-B1 -171	12/ 5/67	4-B1 -323	5/14/69
4-A1 -172	12/ 5/67	4-A1 -343	12/ 5/67	4-A1 -485	7/18/69	4-B1 -172	12/ 5/67	4-B1 -324	5/14/69
4-A1 -173	12/ 5/67	4-A1 -344	12/ 5/67	4-A1 -486	7/18/69	4-B1 -173	12/ 5/67	4-B1 -325	6/21/67
4-A1 -174	6/ 5/67	4-A1 -345	12/ 5/67	4-A1 -487	7/18/69	4-B1 -174	6/21/67	4-B1 -326	5/14/69
4-A1 -175	6/ 5/67	4-A1 -346	12/ 5/67	4-A1 -488	7/18/69	4-B1 -175	6/21/67	4-B1 -327	5/14/69
4-A1 -176	12/ 5/67	4-A1 -347	12/ 5/67	4-A1 -489	6/ 5/67	4-B1 -176	5/14/69	4-B1 -328	5/14/69
4-A1 -177	12/ 5/67	4-A1 -348	6/ 5/67	4-A1 -490	7/18/69	4-B1 -177	12/ 5/67	4-B1 -329	5/14/69
4-A1 -178	6/ 5/67	4-A1 -349	6/ 5/67	4-A1 -491	7/18/69	4-B1 -178	6/21/67	4-B1 -330	6/21/67
4-A1 -179	12/ 5/67	4-A1 -350	6/ 5/67	4-A1 -492	7/18/69	4-B1 -179	12/ 5/67	4-B1 -331	5/14/69
4-A1 -180	6/ 5/67	4-A1 -351	12/ 5/67	4-A1 -493	7/18/69	4-B1 -180	6/21/67	4-B1 -332	5/14/69
4-A1 -181	12/ 5/67	4-A1 -352	6/ 5/67	4-A1 -494	6/ 5/67	4-B1 -181	5/14/69	4-B1 -333	5/14/69
4-A1 -182	12/ 5/67	4-A1 -353	12/ 5/67	4-A1 -495		4-B1 -182	12/ 5/67	4-B1 -334	5/14/69
4-A1 -183	6/ 5/67	4-A1 -354	6/ 5/67	THRU		4-B1 -183	6/21/67	4-B1 -335	6/21/67
4-A1 -184	12/ 5/67	4-A1 -355	6/ 5/67	4-A1 -502		4-B1 -184	12/ 5/67	4-B1 -336	6/21/67
4-A1 -185	6/ 5/67	4-A1 -356	12/ 5/67	INCL.	11/10/69	4-B1 -185	6/21/67	4-B1 -337	6/21/67
4-A1 -186	12/ 5/67	4-A1 -357	6/ 5/67	4-A1 -503	11/10/69	4-B1 -186	5/14/69	4-B1 -338	6/21/67
4-A1 -187	12/ 5/67	4-A1 -358	12/ 5/67	4-A1 -504	11/10/69	4-B1 -187	12/ 5/67	4-B1 -339	6/21/67
4-A1 -188	6/ 5/67	4-A1 -359	6/ 5/67	4-A1 -505	11/10/69	4-B1 -188	6/21/67	4-B1 -340	12/ 5/67
4-A1 -189	12/ 5/67	4-A1 -360	6/ 5/67	4-A1 -506	11/10/69	4-B1 -189	12/ 5/67	4-B1 -341	12/ 5/67
4-A1 -190	6/ 5/67	4-A1 -361	12/ 5/67	4-A1 -507	11/10/69	4-B1 190	6/21/67	4-B1 -342	12/ 5/67
4-A1 -191	6/ 5/67	4-A1 -362	6/ 5/67	4-A1 -508	11/10/69	4-B1 191	6/21/67	4-B1 343	12/ 5/67
4-A1 -192	12/ 5/67	4-A1 -363	12/ 5/67			4-B1 192	12/ 5/67	4-B1 344	12/ 5/67
4-A1 -193	6/ 5/67	4-A1 -364	6/ 5/67	4-B1 - 2		4-B1 193	6/21/67	4-B1 -345	12/ 5/67
4-A1 -194	12/ 5/67	4-A1 -365	6/ 5/67	THRU		4-B1 194	12/ 5/67	4-B1 -346	12/ 5/67
4-A1 -195	6/ 5/67	4-A1 -366	12/ 5/67	4-B1 - 7		4-B1 195	6/21/67	4-B1 -347	12/ 5/67
4-A1 -196	6/ 5/67	4-A1 -367	6/ 5/67	INCL.	10/18/68	4-B1 196	6/21/67	4-B1 -348	6/21/67
4-A1 -197	12/ 5/67	4-A1 -368	12/ 5/67	4-B1 - 8	3/12/69	4-B1 197	12/ 5/67	4-B1 -349	6/21/67
4-A1 -198	6/ 5/67	4-A1 -369	6/ 5/67	4-B1 - 9	10/18/68	4-B1 198	6/21/67	4-B1 -350	6/21/67
4-A1 -199	12/ 5/67	4-A1 -370	6/ 5/67	4-B1 - 10	3/12/69	4-B1 199	12/ 5/67	4-B1 -351	12/ 5/67
4-A1 -200	6/ 5/67	4-A1 -371	12/ 5/67	4-B1 - 11		4-B1 200	6/21/67	4-B1 -352	6/21/67
4-A1 -201	6/ 5/67	4-A1 -372	6/ 5/67	THRU		4-B1 201	6/21/67	4-B1 -353	12/ 5/67
4-A1 -202	12/ 5/67	4-A1 -373	12/ 5/67	4-B1 - 22		4-B1 202	5/14/69	4-B1 -354	6/21/67
4-A1 -203	6/ 5/67	4-A1 -374	6/ 5/67	INCL.	10/18/68	4-B1 203	6/21/67	4-B1 -355	6/21/67
4-A1 -204	12/ 5/67	4-A1 -375	6/ 5/67	4-B1 - 23	3/12/69	4-B1 204	5/14/69	4-B1 -356	12/ 5/67
4-A1 -205	6/ 5/67	4-A1 -376	12/ 5/67	4-B1 - 24	10/18/68	4-B1 -205	6/21/67	4-B1 -357	6/21/67
4-A1 -206	6/ 5/67	4-A1 -377	6/ 5/67	4-B1 - 25	3/12/69	4-B1 -206	6/21/67	4-B1 -358	12/ 5/67
4-A1 -207	12/ 5/67	4-A1 -378	12/ 5/67	4-B1 - 26		4-B1 -207	5/14/69	4-B1 -359	6/21/67
4-A1 -208	6/ 5/67	4-A1 -379	6/ 5/67	THRU		4-B1 -208	6/21/67	4-B1 -360	5/14/69

REGISTERED PROFESSIONAL ENGINEER
LESLIE E. ROBERTSON
No. 34360
STATE OF NEW YORK

SKILLING, HELLE, CHRISTIANSEN, ROBERTSON — Structural & Civil Engineers

PROJECT	TITLE	DATE
THE WORLD TRADE CENTER	EXTERIOR WALL - PANEL SCHEDULES AND DETAILS	12/ 1/69

REVISIONS

4-A81- 1	6/ 1/69	4-A1 -211	6/ 5/67	4-A1 -382	6/ 5/67	4-B1 - 31		4-B1 -211	6/21/67
4-A1 - 2		4-A1 -212	12/ 5/67	4-A1 -383	12/ 5/67	THRU		4-B1 -212	5/14/69
THRU		4-A1 -213	6/ 5/67	4-A1 -384	6/ 5/67	4-B1 -164		4-B1 -213	6/21/67
4-A1 -165		4-A1 -214	12/ 5/67	4-A1 -385	6/ 5/67	INCL.	6/21/67	4-B1 -214	5/14/69
INCL.	6/ 5/67	4-A1 -215		4-A1 -386	12/ 5/67	4-B1 -165	5/14/69	4-B1 -215	
4-A1 -166	12/ 5/67	THRU		4-A1 -387	6/ 5/67	4-B1 -166	12/ 5/67	THRU	
4-A1 -167	12/ 5/67	4-A1 -339		4-A1 -388	12/ 5/67	4-B1 -167	12/ 5/67	4-B1 -320	
4-A1 -168	12/ 5/67	INCL	6/ 5/67	4-A1 -389		4-B1 -168	12/ 5/67	INCL	6/21/67
4-A1 -169	12/ 5/67	4-A1 -340	12/ 5/67	THRU		4-B1 -169	12/ 5/67	4-B1 -321	5/14/69
4-A1 -170	12/ 5/67	4-A1 -341	12/ 5/67	4-A1 -484		4-B1 -170	12/ 5/67	4-B1 -322	5/14/69
4-A1 -171	12/ 5/67	4-A1 -342	12/ 5/67	INCL	6/ 5/67	4-B1 -171	12/ 5/67	4-B1 -323	5/14/69
4-A1 -172	12/ 5/67	4-A1 -343	12/ 5/67	4-A1 -485	7/18/69	4-B1 -172	12/ 5/67	4-B1 -324	5/14/69
4-A1 -173	12/ 5/67	4-A1 -344	12/ 5/67	4-A1 -486	7/18/69	4-B1 -173	12/ 5/67	4-B1 -325	6/21/67
4-A1 -174	6/ 5/67	4-A1 -345	12/ 5/67	4-A1 -487	7/18/69	4-B1 -174	6/21/67	4-B1 -326	5/14/69
4-A1 -175	6/ 5/67	4-A1 -346	12/ 5/67	4-A1 -488	7/18/69	4-B1 -175	6/21/67	4-B1 -327	5/14/69
4-A1 -176	12/ 5/67	4-A1 -347	12/ 5/67	4-A1 -489	6/ 5/67	4-B1 -176	5/14/69	4-B1 -328	5/14/69
4-A1 -177	12/ 5/67	4-A1 -348	6/ 5/67	4-A1 -490	7/18/69	4-B1 -177	12/ 5/67	4-B1 -329	5/14/69
4-A1 -178	6/ 5/67	4-A1 -349	6/ 5/67	4-A1 -491	7/18/69	4-B1 -178	6/21/67	4-B1 -330	6/21/67
4-A1 -179	12/ 5/67	4-A1 -350	6/ 5/67	4-A1 -492	7/18/69	4-B1 -179	12/ 5/67	4-B1 -331	5/14/69
4-A1 -180	6/ 5/67	4-A1 -351	12/ 5/67	4-A1 -493	7/18/69	4-B1 -180	6/21/67	4-B1 -332	5/14/69
4-A1 -181	12/ 5/67	4-A1 -352	6/ 5/67	4-A1 -494	6/ 5/67	4-B1 -181	5/14/69	4-B1 -333	5/14/69
4-A1 -182	12/ 5/67	4-A1 -353	12/ 5/67	4-A1 -495		4-B1 -182	12/ 5/67	4-B1 -334	5/14/69
4-A1 -183	6/ 5/67	4-A1 -354	6/ 5/67	THRU		4-B1 -183	6/21/67	4-B1 -335	6/21/67
4-A1 -184	12/ 5/67	4-A1 -355	6/ 5/67	4-A1 -502		4-B1 -184	12/ 5/67	4-B1 -336	6/21/67
4-A1 -185	6/ 5/67	4-A1 -356	12/ 5/67	INCL.	11/10/69	4-B1 -185	6/21/67	4-B1 -337	6/21/67
4-A1 -186	12/ 5/67	4-A1 -357	6/ 5/67	4-A1 -503	11/10/69	4-B1 -186	12/ 5/67	4-B1 -338	6/21/67
4-A1 -187	12/ 5/67	4-A1 -358	12/ 5/67	4-A1 -504	11/10/69	4-B1 -187	12/ 5/67	4-B1 -339	6/21/67
4-A1 -188	6/ 5/67	4-A1 -359	6/ 5/67	4-A1 -505	11/10/69	4-B1 -188	6/21/67	4-B1 -340	12/ 5/67
4-A1 -189	12/ 5/67	4-A1 -360	6/ 5/67	4-A1 -506	11/10/69	4-B1 -189	12/ 5/67	4-B1 -341	12/ 5/67
4-A1 -190	6/ 5/67	4-A1 -361	12/ 5/67	4-A1 -507	11/10/69	4-B1 190	6/21/67	4-B1 -342	12/ 5/67
4-A1 -191	6/ 5/67	4-A1 -362	6/ 5/67	4-A1 -508	11/10/69	4-B1 191	6/21/67	4-B1 343	12/ 5/67
4-A1 -192	12/ 5/67	4-A1 -363	12/ 5/67			4-B1 192	12/ 5/67	4-B1 344	12/ 5/67
4-A1 -193	6/ 5/67	4-A1 -364	6/ 5/67	4-B1 - 2		4-B1 193	6/21/67	4-B1 -345	12/ 5/67
4-A1 -194	12/ 5/67	4-A1 -365	6/ 5/67	THRU		4-B1 194	12/ 5/67	4-B1 -346	12/ 5/67
4-A1 -195	6/ 5/67	4-A1 -366	12/ 5/67	4-B1 - 7		4-B1 195	6/21/67	4-B1 -347	12/ 5/67
4-A1 -196	6/ 5/67	4-A1 -367	6/ 5/67	INCL.	10/18/68	4-B1 196	6/21/67	4-B1 -348	6/21/67
4-A1 -197	12/ 5/67	4-A1 -368	12/ 5/67	4-B1 - 8	3/12/69	4-B1 197	12/ 5/67	4-B1 -349	6/21/67
4-A1 -198	6/ 5/67	4-A1 -369	6/ 5/67	4-B1 - 9	10/18/68	4-B1 198	6/21/67	4-B1 -350	6/21/67
4-A1 -199	12/ 5/67	4-A1 -370	6/ 5/67	4-B1 - 10	3/12/69	4-B1 199	12/ 5/67	4-B1 -351	12/ 5/67
4-A1 -200	6/ 5/67	4-A1 -371	12/ 5/67	4-B1 - 11		4-B1 200	6/21/67	4-B1 -352	6/21/67
4-A1 -201	6/ 5/67	4-A1 -372	6/ 5/67	THRU		4-B1 201	6/21/67	4-B1 -353	12/ 5/67
4-A1 -202	12/ 5/67	4-A1 -373	12/ 5/67	4-B1 - 22		4-B1 202	5/14/69	4-B1 -354	6/21/67
4-A1 -203	6/ 5/67	4-A1 -374	6/ 5/67	INCL.	10/18/68	4-B1 203	6/21/67	4-B1 -355	6/21/67
4-A1 -204	12/ 5/67	4-A1 -375	6/ 5/67	4-B1 - 23	3/12/69	4-B1 204	5/14/69	4-B1 -356	12/ 5/67
4-A1 -205	6/ 5/67	4-A1 -376	12/ 5/67	4-B1 - 24	10/18/68	4-B1 -205	6/21/67	4-B1 -357	6/21/67
4-A1 -206	6/ 5/67	4-A1 -377	6/ 5/67	4-B1 - 25	3/12/69	4-B1 -206	6/21/67	4-B1 -358	12/ 5/67
4-A1 -207	12/ 5/67	4-A1 -378	12/ 5/67	4-B1 - 26		4-B1 -207	5/14/69	4-B1 -359	6/21/67
4-A1 -208	6/ 5/67	4-A1 -379	6/ 5/67	THRU		4-B1 -208	6/21/67	4-B1 -360	5/14/69
4-A1 -209	12/ 5/67	4-A1 -380	6/ 5/67	4-P1 - 30		4-B1 -209	5/14/69	4-B1 -361	12/ 5/67
4-A1 -210	6/ 5/67	4-A1 -381	12/ 5/67	INCL.	10/18/68	4-B1 -210	6/21/67	4-B1 -362	5/14/69

LICENSED PROFESSIONAL ENGINEER — LESLIE E. ROBERTSON — No. 34360 — UNIVERSITY OF THE STATE OF NEW YORK

SKILLING, HELLE, CHRISTIANSEN, ROBERTSON — Structural & Civil Engineers

PROJECT: THE WORLD TRADE CENTER | TITLE: EXTERIOR WALL - PANEL SCHEDULES AND DETAILS | DATE: 10/ 1/69

REVISIONS

4-AB1- 1	5/ 1/69	4-A1 -211	6/ 5/67	4-A1 -382	6/ 5/67	4-B1 - 31		4-B1 -211	6/21/67
4-A1 - 2		4-A1 -212	12/ 5/67	4-A1 -383	12/ 5/67	THRU		4-B1 -212	5/14/69
THRU		4-A1 -213	6/ 5/67	4-A1 -384	6/ 5/67	4-B1 -164		4-B1 -213	6/21/67
4-A1 -165		4-A1 -214	12/ 5/67	4-A1 -385	6/ 5/67	INCL.	6/21/67	4-B1 -214	5/14/69
INCL.	6/ 5/67	4-A1 -215		4-A1 -386	12/ 5/67	4-B1 -165	5/14/69	4-B1 -215	
4-A1 -166	12/ 5/67	THRU		4-A1 -387	6/ 5/67	4-B1 -166	12/ 5/67	THRU	
4-A1 -167	12/ 5/67	4-A1 -339		4-A1 -388	12/ 5/67	4-B1 -167	12/ 5/67	4-B1 -320	
4-A1 -168	12/ 5/67	INCL	6/ 5/67	4-A1 -389		4-B1 -168	12/ 5/67	INCL	6/21/67
4-A1 -169	12/ 5/67	4-A1 -340	12/ 5/67	THRU		4-B1 -169	12/ 5/67	4-B1 -321	5/14/69
4-A1 -170	12/ 5/67	4-A1 -341	12/ 5/67	4-A1 -484		4-B1 -170	12/ 5/67	4-B1 -322	5/14/69
4-A1 -171	12/ 5/67	4-A1 -342	12/ 5/67	INCL	6/ 5/67	4-B1 -171	12/ 5/67	4-B1 -323	5/14/69
4-A1 -172	12/ 5/67	4-A1 -343	12/ 5/67	4-A1 -485	7/18/69	4-B1 -172	12/ 5/67	4-B1 -324	5/14/69
4-A1 -173	12/ 5/67	4-A1 -344	12/ 5/67	4-A1 -486	7/18/69	4-B1 -173	12/ 5/67	4-B1 -325	6/21/67
4-A1 -174	6/ 5/67	4-A1 -345	12/ 5/67	4-A1 -487	7/18/69	4-B1 -174	6/21/67	4-B1 -326	5/14/69
4-A1 -175	6/ 5/67	4-A1 -346	12/ 5/67	4-A1 -488	7/18/69	4-B1 -175	6/21/67	4-B1 -327	5/14/69
4-A1 -176	12/ 5/67	4-A1 -347	12/ 5/67	4-A1 -489	6/ 5/67	4-B1 -176	5/14/69	4-B1 -328	5/14/69
4-A1 -177	12/ 5/67	4-A1 -348	6/ 5/67	4-A1 -490	7/18/69	4-B1 -177	12/ 5/67	4-B1 -329	5/14/69
4-A1 -178	6/ 5/67	4-A1 -349	6/ 5/67	4-A1 -491	7/18/69	4-B1 -178	6/21/67	4-B1 -330	6/21/67
4-A1 -179	12/ 5/67	4-A1 -350	6/ 5/67	4-A1 -492	7/18/69	4-B1 -179	12/ 5/67	4-B1 -331	5/14/69
4-A1 -180	6/ 5/67	4-A1 -351	12/ 5/67	4-A1 -493	7/18/69	4-B1 -180	6/21/67	4-B1 -332	5/14/69
4-A1 -181	12/ 5/67	4-A1 -352	6/ 5/67	4-A1 -494	6/ 5/67	4-B1 -181	5/14/69	4-B1 -333	5/14/69
4-A1 -182	12/ 5/67	4-A1 -353	12/ 5/67	4-A1 -495		4-B1 -182	12/ 5/67	4-B1 -334	5/14/69
4-A1 -183	6/ 5/67	4-A1 -354	6/ 5/67	THRU		4-B1 -183	6/21/67	4-B1 -335	6/21/67
4-A1 -184	12/ 5/67	4-A1 -355	6/ 5/67	4-A1 -502		4-B1 -184	12/ 5/67	4-B1 -336	6/21/67
4-A1 -185	6/ 5/67	4-A1 -356	12/ 5/67	INCL.	7/18/69	4-B1 -185	6/21/67	4-B1 -337	6/21/67
4-A1 -186	12/ 5/67	4-A1 -357	6/ 5/67	4-A1 -503	6/ 5/67	4-B1 -186	12/ 5/67	4-B1 -338	6/21/67
4-A1 -187	12/ 5/67	4-A1 -358	12/ 5/67	4-A1 -504	7/18/69	4-B1 -187	12/ 5/67	4-B1 -339	6/21/67
4-A1 -188	6/ 5/67	4-A1 -359	6/ 5/67	4-A1 -505	7/18/69	4-B1 -188	6/21/67	4-B1 -340	12/ 5/67
4-A1 -189	12/ 5/67	4-A1 -360	6/ 5/67	4-A1 -506	7/18/69	4-B1 -189	12/ 5/67	4-B1 -341	12/ 5/67
4-A1 -190	6/ 5/67	4-A1 -361	12/ 5/67	4-A1 -507	7/18/69	4-B1 190	6/21/67	4-B1 -342	12/ 5/67
4-A1 -191	6/ 5/67	4-A1 -362	6/ 5/67	4-A1 -508	6/ 5/67	4-B1 191	6/21/67	4-B1 343	12/ 5/67
4-A1 -192	12/ 5/67	4-A1 -363	12/ 5/67			4-B1 192	12/ 5/67	4-B1 344	12/ 5/67
4-A1 -193	6/ 5/67	4-A1 -364	6/ 5/67	4-B1 - 2		4-B1 193	6/21/67	4-B1 -345	12/ 5/67
4-A1 -194	12/ 5/67	4-A1 -365	6/ 5/67	THRU		4-B1 194	12/ 5/67	4-B1 -346	12/ 5/67
4-A1 -195	6/ 5/67	4-A1 -366	12/ 5/67	4-B1 - 7		4-B1 195	6/21/67	4-B1 -347	12/ 5/67
4-A1 -196	6/ 5/67	4-A1 -367	6/ 5/67	INCL.	10/18/68	4-B1 196	6/21/67	4-B1 -348	6/21/67
4-A1 -197	12/ 5/67	4-A1 -368	12/ 5/67	4-B1 - 8	3/12/69	4-B1 197	12/ 5/67	4-B1 -349	6/21/67
4-A1 -198	6/ 5/67	4-A1 -369	6/ 5/67	4-B1 - 9	10/18/68	4-B1 198	6/21/67	4-B1 -350	6/21/67
4-A1 -199	12/ 5/67	4-A1 -370	6/ 5/67	4-B1 - 10	3/12/69	4-B1 199	12/ 5/67	4-B1 -351	12/ 5/67
4-A1 -200	6/ 5/67	4-A1 -371	12/ 5/67	4-B1 - 11		4-B1 200	6/21/67	4-B1 -352	6/21/67
4-A1 -201	6/ 5/67	4-A1 -372	6/ 5/67	THRU		4-B1 201	6/21/67	4-B1 -353	12/ 5/67
4-A1 -202	12/ 5/67	4-A1 -373	12/ 5/67	4-B1 - 22		4-B1 202	5/14/69	4-B1 -354	6/21/67
4-A1 -203	6/ 5/67	4-A1 -374	6/ 5/67	INCL.	10/18/68	4-B1 203	6/21/67	4-B1 -355	6/21/67
4-A1 -204	12/ 5/67	4-A1 -375	6/ 5/67	4-B1 - 23	3/12/69	4-B1 204	5/14/69	4-B1 -356	12/ 5/67
4-A1 -205	6/ 5/67	4-A1 -376	12/ 5/67	4-B1 - 24	10/18/68	4-B1 -205	6/21/67	4-B1 -357	6/21/67
4-A1 -206	6/ 5/67	4-A1 -377	6/ 5/67	4-B1 - 25	3/12/69	4-B1 -206	6/21/67	4-B1 -358	12/ 5/67
4-A1 -207	12/ 5/67	4-A1 -378	12/ 5/67	4-B1 - 26		4-B1 -207	5/14/69	4-B1 -359	6/21/67
4-A1 -208	6/ 5/67	4-A1 -379	6/ 5/67	THRU		4-B1 -208	6/21/67	4-B1 -360	5/14/69
4-A1 -209	12/ 5/67	4-A1 -380	6/ 5/67	4-B1 - 30		4-B1 -209	5/14/69	4-B1 -361	12/ 5/67
4-A1 -210	6/ 5/67	4-A1 -381	12/ 5/67	INCL.	10/18/68	4-B1 -210	6/21/67	4-B1 -362	5/14/69

LICENSED PROFESSIONAL ENGINEER * LESLIE E. ROBERTSON * No. 34360 * STATE OF NEW YORK

SKILLING, HELLE, CHRISTIANSEN, ROBERTSON — Structural & Civil Engineers

PROJECT: THE WORLD TRADE CENTER | TITLE: EXTERIOR WALL - PANEL SCHEDULES AND DETAILS | DATE: 9/ 2/69

REVISIONS

4-A61- 1	5/ 1/69	4-A1 -211	6/ 5/67	4-A1 -382	6/ 5/67	4-B1 - 31		4-B1 -211	6/21/67
4-A1 - 2		4-A1 -212	12/ 5/67	4-A1 -383	12/ 5/67	THRU		4-B1 -212	5/14/69
THRU		4-A1 -213	6/ 5/67	4-A1 -384	6/ 5/67	4-B1 -164		4-B1 -213	6/21/67
4-A1 -165		4-A1 -214	12/ 5/67	4-A1 -385	6/ 5/67	INCL.	6/21/67	4-B1 -214	5/14/69
INCL.	6/ 5/67	4-A1 -215		4-A1 -386	12/ 5/67	4-B1 -165	5/14/69	4-B1 -215	
4-A1 -166	12/ 5/67	THRU		4-A1 -387	6/ 5/67	4-B1 -166	12/ 5/67	THRU	
4-A1 -167	12/ 5/67	4-A1 -339		4-A1 -388	12/ 5/67	4-B1 -167	12/ 5/67	4-B1 -320	
4-A1 -168	12/ 5/67	INCL	6/ 5/67	4-A1 -389		4-B1 -168	12/ 5/67	INCL	6/21/67
4-A1 -169	12/ 5/67	4-A1 -340	12/ 5/67	THRU		4-B1 -169	12/ 5/67	4-B1 -321	5/14/69
4-A1 -170	12/ 5/67	4-A1 -341	12/ 5/67	4-A1 -484		4-B1 -170	12/ 5/67	4-B1 -322	5/14/69
4-A1 -171	12/ 5/67	4-A1 -342	12/ 5/67	INCL	6/ 5/67	4-B1 -171	12/ 5/67	4-B1 -323	5/14/69
4-A1 -172	12/ 5/67	4-A1 -343	12/ 5/67	4-A1 -485	7/18/69	4-B1 -172	12/ 5/67	4-B1 -324	5/14/69
4-A1 -173	12/ 5/67	4-A1 -344	12/ 5/67	4-A1 -486	7/18/69	4-B1 -173	12/ 5/67	4-B1 -325	6/21/67
4-A1 -174	6/ 5/67	4-A1 -345	12/ 5/67	4-A1 -487	7/18/69	4-B1 -174	6/21/67	4-B1 -326	5/14/69
4-A1 -175	6/ 5/67	4-A1 -346	12/ 5/67	4-A1 -488	7/18/69	4-B1 -175	6/21/67	4-B1 -327	5/14/69
4-A1 -176	12/ 5/67	4-A1 -347	12/ 5/67	4-A1 -489	6/ 5/67	4-B1 -176	5/14/69	4-B1 -328	5/14/69
4-A1 -177	12/ 5/67	4-A1 -348	6/ 5/67	4-A1 -490	7/18/69	4-B1 -177	12/ 5/67	4-B1 -329	5/14/69
4-A1 -178	6/ 5/67	4-A1 -349	6/ 5/67	4-A1 -491	7/18/69	4-B1 -178	6/21/67	4-B1 -330	6/21/67
4-A1 -179	12/ 5/67	4-A1 -350	6/ 5/67	4-A1 -492	7/18/69	4-B1 -179	12/ 5/67	4-B1 -331	5/14/69
4-A1 -180	6/ 5/67	4-A1 -351	12/ 5/67	4-A1 -493	7/18/69	4-B1 -180	6/21/67	4-B1 -332	5/14/69
4-A1 -181	12/ 5/67	4-A1 -352	6/ 5/67	4-A1 -494	6/ 5/67	4-B1 -181	5/14/69	4-B1 -333	5/14/69
4-A1 -182	12/ 5/67	4-A1 -353	12/ 5/67	4-A1 -495		4-B1 -182	12/ 5/67	4-B1 -334	5/14/69
4-A1 -183	6/ 5/67	4-A1 -354	6/ 5/67	THRU		4-B1 -183	6/21/67	4-B1 -335	6/21/67
4-A1 -184	12/ 5/67	4-A1 -355	6/ 5/67	4-A1 -502		4-B1 -184	12/ 5/67	4-B1 -336	6/21/67
4-A1 -185	6/ 5/67	4-A1 -356	12/ 5/67	INCL.	7/18/69	4-B1 -185	6/21/67	4-B1 -337	6/21/67
4-A1 -186	12/ 5/67	4-A1 -357	6/ 5/67	4-A1 -503	6/ 5/67	4-B1 -186	12/ 5/67	4-B1 -338	6/21/67
4-A1 -187	12/ 5/67	4-A1 -358	12/ 5/67	4-A1 -504	7/18/69	4-B1 -187	12/ 5/67	4-B1 -339	6/21/67
4-A1 -188	6/ 5/67	4-A1 -359	6/ 5/67	4-A1 -505	7/18/69	4-B1 -188	6/21/67	4-B1 -340	12/ 5/67
4-A1 -189	12/ 5/67	4-A1 -360	6/ 5/67	4-A1 -506	7/18/69	4-B1 -189	12/ 5/67	4-B1 -341	12/ 5/67
4-A1 -190	6/ 5/67	4-A1 -361	12/ 5/67	4-A1 -507	7/18/69	4-B1 190	6/21/67	4-B1 -342	12/ 5/67
4-A1 -191	6/ 5/67	4-A1 -362	6/ 5/67	4-A1 -508	6/ 5/67	4-B1 191	6/21/67	4-B1 343	12/ 5/67
4-A1 -192	12/ 5/67	4-A1 -363	12/ 5/67			4-B1 192	12/ 5/67	4-B1 344	12/ 5/67
4-A1 -193	6/ 5/67	4-A1 -364	6/ 5/67	4-B1 - 2		4-B1 193	6/21/67	4-B1 -345	12/ 5/67
4-A1 -194	12/ 5/67	4-A1 -365	6/ 5/67	THRU		4-B1 194	12/ 5/67	4-B1 -346	12/ 5/67
4-A1 -195	6/ 5/67	4-A1 -366	12/ 5/67	4-B1 - 7		4-B1 195	6/21/67	4-B1 -347	12/ 5/67
4-A1 -196	6/ 5/67	4-A1 -367	6/ 5/67	INCL.	10/18/68	4-B1 196	6/21/67	4-B1 -348	6/21/67
4-A1 -197	12/ 5/67	4-A1 -368	12/ 5/67	4-B1 - 8	3/12/69	4-B1 197	12/ 5/67	4-B1 -349	6/21/67
4-A1 -198	6/ 5/67	4-A1 -369	6/ 5/67	4-B1 - 9	10/18/68	4-B1 198	6/21/67	4-B1 -350	6/21/67
4-A1 -199	12/ 5/67	4-A1 -370	6/ 5/67	4-B1 - 10	3/12/69	4-B1 199	12/ 5/67	4-B1 -351	12/ 5/67
4-A1 -200	6/ 5/67	4-A1 -371	12/ 5/67	4-B1 - 11		4-B1 200	6/21/67	4-B1 -352	6/21/67
4-A1 -201	6/ 5/67	4-A1 -372	6/ 5/67	THRU		4-B1 201	6/21/67	4-B1 -353	12/ 5/67
4-A1 -202	12/ 5/67	4-A1 -373	12/ 5/67	4-B1 - 22		4-B1 202	5/14/69	4-B1 -354	6/21/67
4-A1 -203	6/ 5/67	4-A1 -374	6/ 5/67	INCL.	10/18/68	4-B1 203	6/21/67	4-B1 -355	6/21/67
4-A1 -204	12/ 5/67	4-A1 -375	6/ 5/67	4-B1 - 23	3/12/69	4-B1 204	5/14/69	4-B1 -356	12/ 5/67
4-A1 -205	6/ 5/67	4-A1 -376	12/ 5/67	4-B1 - 24	10/18/68	4-B1 -205	6/21/67	4-B1 -357	6/21/67
4-A1 -206	6/ 5/67	4-A1 -377	6/ 5/67	4-B1 - 25	3/12/69	4-B1 -206	6/21/67	4-B1 -358	12/ 5/67
4-A1 -207	12/ 5/67	4-A1 -378	12/ 5/67	4-B1 - 26		4-B1 -207	5/14/69	4-B1 -359	6/21/67
4-A1 -208	6/ 5/67	4-A1 -379	6/ 5/67	THRU		4-B1 -208	6/21/67	4-B1 -360	5/14/69
4-A1 -209	12/ 5/67	4-A1 -380	6/ 5/67	4-B1 - 30		4-B1 -209	5/14/69	4-B1 -361	12/ 5/67
4-A1 -210	6/ 5/67	4-A1 -381	12/ 5/67	INCL.	10/18/68	4-B1 -210	6/21/67	4-B1 -362	5/14/69

LICENSED PROFESSIONAL ENGINEER
LESLIE E. ROBERTSON
No. 34360
UNIVERSITY OF THE STATE OF NEW YORK

SKILLING-HELLE-CHRISTIANSEN-ROBERTSON — Civil & Structural Engineers

PROJECT: THE WORLD TRADE CENTER | TITLE: EXTERIOR WALL - PANEL SCHEDULES AND DETAILS | DATE: 7/ 1/69

REVISIONS

4-AB1- 1	5/ 1/69	4-A1 -211	6/ 5/67	4-A1 -382	6/ 5/67	4-B1 -174	6/21/67	4-B1 -326	5/14/69
4-A1 - 2		4-A1 -212	12/ 5/67	4-A1 -383	12/ 5/67	4-B1 -175	6/21/67	4-B1 -327	5/14/69
THRU		4-A1 -213	6/ 5/67	4-A1 -384	6/ 5/67	4-B1 -176	5/14/69	4-B1 -328	5/14/69
4-A1 -165		4-A1 -214	12/ 5/67	4-A1 -385	6/ 5/67	4-B1 -177	12/ 5/67	4-B1 -329	5/14/69
INCL.	6/ 5/67	4-A1 -215		4-A1 -386	12/ 5/67	4-B1 -178	6/21/67	4-B1 -330	6/21/67
4-A1 -166	12/ 5/67	THRU		4-A1 -387	6/ 5/67	4-B1 -179	12/ 5/67	4-B1 -331	5/14/69
4-A1 -167	12/ 5/67	4-A1 -339		4-A1 -388	12/ 5/67	4-B1 -180	6/21/67	4-B1 -332	5/14/69
4-A1 -168	12/ 5/67	INCL	6/ 5/67	4-A1 -389		4-B1 -181	5/14/69	4-B1 -333	5/14/69
4-A1 -169	12/ 5/67	4-A1 -340	12/ 5/67	THRU		4-B1 -182	12/ 5/67	4-B1 -334	5/14/69
4-A1 -170	12/ 5/67	4-A1 -341	12/ 5/67	4-A1 -498		4-B1 -183	6/21/67	4-B1 -335	6/21/67
4-A1 -171	12/ 5/67	4-A1 -342	12/ 5/67	INCL	6/ 5/67	4-B1 -184	12/ 5/67	4-B1 -336	6/21/67
4-A1 -172	12/ 5/67	4-A1 -343	12/ 5/67	4-A1-499		4-B1 -185	6/21/67	4-B1 -337	6/21/67
4-A1 -173	12/ 5/67	4-A1 -344	12/ 5/67	THRU		4-B1 -186	12/ 5/67	4-B1 -338	6/21/67
4-A1 -174	6/ 5/67	4-A1 -345	12/ 5/67	4-A1-502		4-B1 -187	12/ 5/67	4-B1 -339	6/21/67
4-A1 -175	6/ 5/67	4-A1 -346	12/ 5/67	INCL.	7/10/67	4-B1 -188	6/21/67	4-B1 -340	12/ 5/67
4-A1 -176	12/ 5/67	4-A1 -347	12/ 5/67	4-A1-503		4-B1 -189	12/ 5/67	4-B1 -341	12/ 5/67
4-A1 -177	12/ 5/67	4-A1 -348	6/ 5/67	THRU		4-B1 190	6/21/67	4-B1 -342	12/ 5/67
4-A1 -178	6/ 5/67	4-A1 -349	6/ 5/67	4-A1-508		4-B1 191	6/21/67	4-B1 343	12/ 5/67
4-A1 -179	12/ 5/67	4-A1 -350	6/ 5/67	INCL.	6/ 5/67	4-B1 192	12/ 5/67	4-B1 344	12/ 5/67
4-A1 -180	6/ 5/67	4-A1 -351	12/ 5/67	4-B1 - 2		4-B1 193	6/21/67	4-B1 -345	12/ 5/67
4-A1 -181	12/ 5/67	4-A1 -352	6/ 5/67	THRU		4-B1 194	12/ 5/67	4-B1 -346	12/ 5/67
4-A1 -182	12/ 5/67	4-A1 -353	12/ 5/67	4-B1 - 7		4-B1 195	6/21/67	4-B1 -347	12/ 5/67
4-A1 -183	6/ 5/67	4-A1 -354	6/ 5/67	INCL.	10/18/68	4-B1 196	6/21/67	4-B1 -348	6/21/67
4-A1 -184	12/ 5/67	4-A1 -355	6/ 5/67	4-B1 - 8	3/12/69	4-B1 197	12/ 5/67	4-B1 -349	6/21/67
4-A1 -185	6/ 5/67	4-A1 -356	12/ 5/67	4-B1 - 9	10/18/68	4-B1 198	6/21/67	4-B1 -350	6/21/67
4-A1 -186	12/ 5/67	4-A1 -357	6/ 5/67	4-B1 - 10	3/12/69	4-B1 199	12/ 5/67	4-B1 -351	12/ 5/67
4-A1 -187	12/ 5/67	4-A1 -358	12/ 5/67	4-B1 - 11		4-B1 200	6/21/67	4-B1 -352	6/21/67
4-A1 -188	6/ 5/67	4-A1 -359	6/ 5/67	THRU		4-B1 201	6/21/67	4-B1 -353	12/ 5/67
4-A1 -189	12/ 5/67	4-A1 -360	6/ 5/67	4-B1 - 22		4-B1 202	5/14/69	4-B1 -354	6/21/67
4-A1 -190	6/ 5/67	4-A1 -361	12/ 5/67	INCL.	10/18/68	4-B1 203	6/21/67	4-B1 -355	6/21/67
4-A1 -191	6/ 5/67	4-A1 -362	6/ 5/67	4-B1 - 23	3/12/69	4-B1 204	5/14/69	4-B1 -356	12/ 5/67
4-A1 -192	12/ 5/67	4-A1 -363	12/ 5/67	4-B1 - 24	10/18/68	4-B1 -205	6/21/67	4-B1 -357	6/21/67
4-A1 -193	6/ 5/67	4-A1 -364	6/ 5/67	4-B1 - 25	3/12/69	4-B1 -206	6/21/67	4-B1 -358	12/ 5/67
4-A1 -194	12/ 5/67	4-A1 -365	6/ 5/67	4-B1 - 26		4-B1 -207	5/14/69	4-B1 -359	6/21/67
4-A1 -195	6/ 5/67	4-A1 -366	12/ 5/67	THRU		4-B1 -208	6/21/67	4-B1 -360	5/14/69
4-A1 -196	6/ 5/67	4-A1 -367	6/ 5/67	4-B1 - 30		4-B1 -209	5/14/69	4-B1 -361	12/ 5/67
4-A1 -197	12/ 5/67	4-A1 -368	12/ 5/67	INCL.	10/18/68	4-B1 -210	6/21/67	4-B1 -362	5/14/69
4-A1 -198	6/ 5/67	4-A1 -369	6/ 5/67	4-B1 - 31		4-B1 -211	6/21/67	4-B1 -363	12/ 5/67
4-A1 -199	12/ 5/67	4-A1 -370	6/ 5/67	THRU		4-B1 -212	5/14/69	4-B1 -364	6/21/67
4-A1 -200	6/ 5/67	4-A1 -371	12/ 5/67	4-B1 -164		4-B1 -213	6/21/67	4-B1 -365	5/14/69
4-A1 -201	6/ 5/67	4-A1 -372	6/ 5/67	INCL.	6/21/67	4-B1 -214	5/14/69	4-B1 -366	12/ 5/67
4-A1 -202	12/ 5/67	4-A1 -373	12/ 5/67	4-B1 -165	5/14/69	4-B1 -215		4-B1 -367	5/14/69
4-A1 -203	6/ 5/67	4-A1 -374	6/ 5/67	4-B1 -166	12/ 5/67	THRU		4-B1 -368	12/ 5/67
4-A1 -204	12/ 5/67	4-A1 -375	6/ 5/67	4-B1 -167	12/ 5/67	4-B1 -320		4-B1 -369	6/21/67
4-A1 -205	6/ 5/67	4-A1 -376	12/ 5/67	4-B1 -168	12/ 5/67	INCL	6/21/67	4-B1 -370	5/14/69
4-A1 -206	6/ 5/67	4-A1 -377	6/ 5/67	4-B1 -169	12/ 5/67	4-B1 -321	5/14/69	4-B1 -371	12/ 5/67
4-A1 -207	12/ 5/67	4-A1 -378	12/ 5/67	4-B1 -170	12/ 5/67	4-B1 -322	5/14/69	4-B1 -372	5/14/69
4-A1 -208	6/ 5/67	4-A1 -379	6/ 5/67	4-B1 -171	12/ 5/67	4-B1 -323	5/14/69	4-B1 -373	12/ 5/67
4-A1 -209	12/ 5/67	4-A1 -380	6/ 5/67	4-B1 -172	12/ 5/67	4-B1 -324	5/14/69	4-B1 -374	6/21/67
4-A1 -210	6/ 5/67	4-A1 -381	12/ 5/67	4-B1 -173	12/ 5/67	4-B1 -325	6/21/67	4-B1 -375	6/21/67

LICENSED PROFESSIONAL ENGINEER ☆ LESLIE E. ROBERTSON ☆ No. 34360 ☆ UNIVERSITY OF THE STATE OF NEW YORK

SKILLING, HELLE, CHRISTIANSEN, ROBERTSON Structural & Civil Engineers

PROJECT: THE WORLD TRADE CENTER | TITLE: EXTERIOR WALL - PANEL SCHEDULES AND DETAILS | DATE: 4/ 1/69

REVISIONS
A ed 5-1-69

4-AB1- 1	4/ 1/69	4-A1 -211	6/ 5/67	4-A1 -382	6/ 5/67	4-B1 -175	6/21/67	4-B1 -346	12/ 5/67			
4-A1- 2		4-A1 -212	12/ 5/67	4-A1 -383	12/ 5/67	4-B1 -176	12/ 5/67	4-B1 -347	12/ 5/67			
THRU		4-A1 -213	6/ 5/67	4-A1 -384	6/ 5/67	4-B1 -177	12/ 5/67	4-B1 -348	6/21/67			
4-A1 -165		4-A1 -214	12/ 5/67	4-A1 -385	6/ 5/67	4-B1 -178	6/21/67	4-B1 -349	6/21/67			
INCL.	6/ 5/67	4-A1 -215		4-A1 -386	12/ 5/67	4-B1 -179	12/ 5/67	4-B1 -350	6/21/67			
4-A1 -166	12/ 5/67	THRU		4-A1 -387	6/ 5/67	4-B1 -180	6/21/67	4-B1 -351	12/ 5/67			
4-A1 -167	12/ 5/67	4-A1 -339		4-A1 -388	12/ 5/67	4-B1 -181	12/ 5/67	4-B1 -352	6/21/67			
4-A1 -168	12/ 5/67	INCL	6/ 5/67	4-A1 -389		4-B1 -182	12/ 5/67	4-B1 -353	12/ 5/67			
4-A1 -169	12/ 5/67	4-A1 -340	12/ 5/67	THRU		4-B1 -183	6/21/67	4-B1 -354	6/21/67			
4-A1 -170	12/ 5/67	4-A1 -341	12/ 5/67	4-A1 -498		4-B1 -184	12/ 5/67	4-B1 -355	6/21/67			
4-A1 -171	12/ 5/67	4-A1 -342	12/ 5/67	INCL	6/ 5/67	4-B1 -185	6/21/67	4-B1 -356	12/ 5/67			
4-A1 -172	12/ 5/67	4-A1 -343	12/ 5/67	4-A1-499		4-B1 -186	12/ 5/67	4-B1 -357	6/21/67			
4-A1 -173	12/ 5/67	4-A1 -344	12/ 5/67	THRU		4-B1 -187	12/ 5/67	4-B1 -358	12/ 5/67			
4-A1 -174	6/ 5/67	4-A1 -345	12/ 5/67	4-A1-502		4-B1 -188	6/21/67	4-B1 -359	6/21/67			
4-A1 -175	6/ 5/67	4-A1 -346	12/ 5/67	INCL.	7/10/67	4-B1 -189	12/ 5/67	4-B1 -360	6/21/67			
4-A1 -176	12/ 5/67	4-A1 -347	12/ 5/67	4-A1-503		4-B1 190	6/21/67	4-B1 -361	12/ 5/67			
4-A1 -177	12/ 5/67	4-A1 -348	6/ 5/67	THRU		4-B1 191	6/21/67	4-B1 -362	6/21/67			
4-A1 -178	6/ 5/67	4-A1 -349	6/ 5/67	4-A1-508		4-B1 192	12/ 5/67	4-B1 -363	12/ 5/67			
4-A1 -179	12/ 5/67	4-A1 -350	6/ 5/67	INCL.	6/ 5/67	4-B1 193	6/21/67	4-B1 -364	6/21/67			
4-A1 -180	6/ 5/67	4-A1 -351	12/ 5/67	4-B1 - 2		4-B1 194	12/ 5/67	4-B1 -365	6/21/67			
4-A1 -181	12/ 5/67	4-A1 -352	6/ 5/67	THRU		4-B1 195	6/21/67	4-B1 -366	12/ 5/67			
4-A1 -182	12/ 5/67	4-A1 -353	12/ 5/67	4-B1 - 7		4-B1 196	6/21/67	4-B1 -367	6/21/67			
4-A1 -183	6/ 5/67	4-A1 -354	6/ 5/67	INCL.	10/10/68	4-B1 197	12/ 5/67	4-B1 -368	12/ 5/67			
4-A1 -184	12/ 5/67	4-A1 -355	6/ 5/67	4-B1 - 8	3/12/69	4-B1 198	6/21/67	4-B1 -369	6/21/67			
4-A1 -185	6/ 5/67	4-A1 -356	12/ 5/67	4-B1 - 9	10/18/68	4-B1 199	12/ 5/67	4-B1 -370	6/21/67			
4-A1 -186	12/ 5/67	4-A1 -357	6/ 5/67	4-B1 - 10	3/12/69	4-B1 200	6/21/67	4-B1 -371	12/ 5/67			
4-A1 -187	12/ 5/67	4-A1 -358	12/ 5/67	4-B1 - 11		4-B1 201	6/21/67	4-B1 -372	6/21/67			
4-A1 -188	6/ 5/67	4-A1 -359	6/ 5/67	THRU		4-B1 202	12/ 5/67	4-B1 -373	12/ 5/67			
4-A1 -189	12/ 5/67	4-A1 -360	6/ 5/67	4-B1 - 22		4-B1 203	6/21/67	4-B1 -374	6/21/67			
4-A1 -190	6/ 5/67	4-A1 -361	12/ 5/67	INCL.	10/18/68	4-B1 204	12/ 5/67	4-B1 -375	6/21/67			
4-A1 -191	6/ 5/67	4-A1 -362	6/ 5/67	4-B1 - 23	3/12/69	4-B1 -205	6/21/67	4-B1 -376	12/ 5/67			
4-A1 -192	12/ 5/67	4-A1 -363	12/ 5/67	4-B1 - 24	10/18/68	4-B1 -206	6/21/67	4-B1 -377	6/21/67			
4-A1 -193	6/ 5/67	4-A1 -364	6/ 5/67	4-B1 - 25	3/12/69	4-B1 -207	12/ 5/67	4-B1 -378	12/ 5/67			
4-A1 -194	12/ 5/67	4-A1 -365	6/ 5/67	4-B1 - 26		4-B1 -208	6/21/67	4-B1 -379	6/21/67			
4-A1 -195	6/ 5/67	4-A1 -366	12/ 5/67	THRU		4-B1 -209	12/ 5/67	4-B1 -380	6/21/67			
4-A1 -196	6/ 5/67	4-A1 -367	6/ 5/67	4-B1 - 30		4-B1 -210	6/21/67	4-B1 -381	12/ 5/67			
4-A1 -197	12/ 5/67	4-A1 -368	12/ 5/67	INCL.	10/18/68	4-B1 -211	6/21/67	4-B1 -382	6/21/67			
4-A1 -198	6/ 5/67	4-A1 -369	6/ 5/67	4-B1 - 31		4-B1 -212	12/ 5/67	4-B1 -383	12/ 5/67			
4-A1 -199	12/ 5/67	4-A1 -370	6/ 5/67	THRU		4-B1 -213	6/21/67	4-B1 384	6/21/67			
4-A1 -200	6/ 5/67	4-A1 -371	12/ 5/67	4-B1 -165		4-B1 -214	12/ 5/67	4-B1 385	6/21/67			
4-A1 -201	6/ 5/67	4-A1 -372	6/ 5/67	INCL.	6/21/67	4-B1 -215		4-B1 386	12/ 5/67			
4-A1 -202	12/ 5/67	4-A1 -373	12/ 5/67	4-B1 -166	12/ 5/67	THRU		4-B1 387	6/21/67			
4-A1 -203	6/ 5/67	4-A1 -374	6/ 5/67	4-B1 -167	12/ 5/67	4-B1 -339		4-B1 388	12/ 5/67			
4-A1 -204	12/ 5/67	4-A1 -375	6/ 5/67	4-B1 -168	12/ 5/67	INCL	6/21/67	4-B1 -389				
4-A1 -205	6/ 5/67	4-A1 -376	12/ 5/67	4-B1 -169	12/ 5/67	4-B1 -340	12/ 5/67	THRU				
4-A1 -206	6/ 5/67	4-A1 -377	6/ 5/67	4-B1 -170	12/ 5/67	4-B1 -341	12/ 5/67	4-B1 -508				
4-A1 -207	12/ 5/67	4-A1 -378	12/ 5/67	4-B1 -171	12/ 5/67	4-B1 -342	12/ 5/67	INCL	6/21/67			
4-A1 -208	6/ 5/67	4-A1 -379	6/ 5/67	4-B1 -172	12/ 5/67	4-B1 343	12/ 5/67	4-AB2- 1	4/ 1/69			
4-A1 -209	12/ 5/67	4-A1 -380	6/ 5/67	4-B1 -173	12/ 5/67	4-B1 344	12/ 5/67	4-AB2- 2	6/ 5/67			
4-A1 -210	6/ 5/67	4-A1 -381	12/ 5/67	4-B1 -174	6/21/67	4-B1 -345	12/ 5/67	4-AB2- 3	5/11/67			

LICENSED PROFESSIONAL ENGINEER LESLIE E. ROBERTSON No. 9481 UNIVERSITY OF THE STATE OF NEW YORK

SKILLING, HELLE, CHRISTIANSEN, ROBERTSON — Structural & Civil Engineers

PROJECT: THE WORLD TRADE CENTER | TITLE: EXTERIOR WALL - PANEL SCHEDULES AND DETAILS | DATE: 4/ 1/69

REVISIONS

4-AB1- 1	4/ 1/69	4-A1 -211	6/ 5/67	4-A1 -382	6/ 5/67	4-B1 -175	6/21/67	4-B1 -346	12/ 5/67
4-A1 - 2		4-A1 -212	12/ 5/67	4-A1 -383	12/ 5/67	4-B1 -176	12/ 5/67	4-B1 -347	12/ 5/67
THRU		4-A1 -213	6/ 5/67	4-A1 -384	6/ 5/67	4-B1 -177	12/ 5/67	4-B1 -348	6/21/67
4-A1 -165		4-A1 -214	12/ 5/67	4-A1 -385	6/ 5/67	4-B1 -178	6/21/67	4-B1 -349	6/21/67
INCL.	6/ 5/67	4-A1 -215		4-A1 -386	12/ 5/67	4-B1 -179	12/ 5/67	4-B1 -350	6/21/67
4-A1 -166	12/ 5/67	THRU		4-A1 -387	6/ 5/67	4-B1 -180	6/21/67	4-B1 -351	12/ 5/67
4-A1 -167	12/ 5/67	4-A1 -339		4-A1 -388	12/ 5/67	4-B1 -181	12/ 5/67	4-B1 -352	6/21/67
4-A1 -168	12/ 5/67	INCL	6/ 5/67	4-A1 -389		4-B1 -182	12/ 5/67	4-B1 -353	12/ 5/67
4-A1 -169	12/ 5/67	4-A1 -340	12/ 5/67	THRU		4-B1 -183	6/21/67	4-B1 -354	6/21/67
4-A1 -170	12/ 5/67	4-A1 -341	12/ 5/67	4-A1 -498		4-B1 -184	12/ 5/67	4-B1 -355	6/21/67
4-A1 -171	12/ 5/67	4-A1 -342	12/ 5/67	INCL	6/ 5/67	4-B1 -185	6/21/67	4-B1 -356	12/ 5/67
4-A1 -172	12/ 5/67	4-A1 -343	12/ 5/67	4-A1-499		4-B1 -186	12/ 5/67	4-B1 -357	6/21/67
4-A1 -173	12/ 5/67	4-A1 -344	12/ 5/67	THRU		4-B1 -187	12/ 5/67	4-B1 -358	12/ 5/67
4-A1 -174	6/ 5/67	4-A1 -345	12/ 5/67	4-A1-502		4-B1 -188	6/21/67	4-B1 -359	6/21/67
4-A1 -175	6/ 5/67	4-A1 -346	12/ 5/67	INCL.	7/10/67	4-B1 -189	12/ 5/67	4-B1 -360	6/21/67
4-A1 -176	12/ 5/67	4-A1 -347	12/ 5/67	4-A1-503		4-B1 190	6/21/67	4-B1 -361	12/ 5/67
4-A1 -177	12/ 5/67	4-A1 -348	6/ 5/67	THRU		4-B1 191	6/21/67	4-B1 -362	6/21/67
4-A1 -178	6/ 5/67	4-A1 -349	6/ 5/67	4-A1-508		4-B1 192	12/ 5/67	4-B1 -363	12/ 5/67
4-A1 -179	12/ 5/67	4-A1 -350	6/ 5/67	INCL.	6/ 5/67	4-B1 193	6/21/67	4-B1 -364	6/21/67
4-A1 -180	6/ 5/67	4-A1 -351	12/ 5/67	4-B1 - 2		4-B1 194	12/ 5/67	4-B1 -365	6/21/67
4-A1 -181	12/ 5/67	4-A1 -352	6/ 5/67	THRU		4-B1 195	6/21/67	4-B1 -366	12/ 5/67
4-A1 -182	12/ 5/67	4-A1 -353	12/ 5/67	4-B1 - 7		4-B1 196	6/21/67	4-B1 -367	6/21/67
4-A1 -183	6/ 5/67	4-A1 -354	6/ 5/67	INCL.	10/18/68	4-B1 197	12/ 5/67	4-B1 -368	12/ 5/67
4-A1 -184	12/ 5/67	4-A1 -355	6/ 5/67	4-B1 - 8	3/12/69	4-B1 198	6/21/67	4-B1 -369	6/21/67
4-A1 -185	6/ 5/67	4-A1 -356	12/ 5/67	4-B1 - 9	10/18/68	4-B1 199	12/ 5/67	4-B1 -370	6/21/67
4-A1 -186	12/ 5/67	4-A1 -357	6/ 5/67	4-B1 - 10	3/12/69	4-B1 200	6/21/67	4-B1 -371	12/ 5/67
4-A1 -187	12/ 5/67	4-A1 -358	12/ 5/67	4-B1 - 11		4-B1 201	6/21/67	4-B1 -372	6/21/67
4-A1 -188	6/ 5/67	4-A1 -359	6/ 5/67	THRU		4-B1 202	12/ 5/67	4-B1 -373	12/ 5/67
4-A1 -189	12/ 5/67	4-A1 -360	6/ 5/67	4-B1 - 22		4-B1 203	6/21/67	4-B1 -374	6/21/67
4-A1 -190	6/ 5/67	4-A1 -361	12/ 5/67	INCL.	10/18/68	4-B1 204	12/ 5/67	4-B1 -375	6/21/67
4-A1 -191	6/ 5/67	4-A1 -362	6/ 5/67	4-B1 - 23	3/12/69	4-B1 -205	6/21/67	4-B1 -376	12/ 5/67
4-A1 -192	12/ 5/67	4-A1 -363	12/ 5/67	4-B1 - 24	10/18/68	4-B1 -206	6/21/67	4-B1 -377	6/21/67
4-A1 -193	6/ 5/67	4-A1 -364	6/ 5/67	4-B1 - 25	3/12/69	4-B1 -207	12/ 5/67	4-B1 -378	12/ 5/67
4-A1 -194	12/ 5/67	4-A1 -365	6/ 5/67	4-B1 - 26		4-B1 -208	6/21/67	4-B1 -379	6/21/67
4-A1 -195	6/ 5/67	4-A1 -366	12/ 5/67	THRU		4-B1 -209	12/ 5/67	4-B1 -380	6/21/67
4-A1 -196	6/ 5/67	4-A1 -367	6/ 5/67	4-B1 - 30		4-B1 -210	6/21/67	4-B1 -381	12/ 5/67
4-A1 -197	12/ 5/67	4-A1 -368	12/ 5/67	INCL.	10/18/68	4-B1 -211	6/21/67	4-B1 -382	6/21/67
4-A1 -198	6/ 5/67	4-A1 -369	6/ 5/67	4-B1 - 31		4-B1 -212	12/ 5/67	4-B1 -383	12/ 5/67
4-A1 -199	12/ 5/67	4-A1 -370	6/ 5/67	THRU		4-B1 -213	6/21/67	4-B1 384	6/21/67
4-A1 -200	6/ 5/67	4-A1 -371	12/ 5/67	4-B1 -165		4-B1 -214	12/ 5/67	4-B1 385	6/21/67
4-A1 -201	6/ 5/67	4-A1 -372	6/ 5/67	INCL.	6/21/67	4-B1 -215		4-B1 386	12/ 5/67
4-A1 -202	12/ 5/67	4-A1 -373	12/ 5/67	4-B1 -166	12/ 5/67	THRU		4-B1 387	6/21/67
4-A1 -203	6/ 5/67	4-A1 -374	6/ 5/67	4-B1 -167	12/ 5/67	4-B1 -339		4-B1 388	12/ 5/67
4-A1 -204	12/ 5/67	4-A1 -375	6/ 5/67	4-B1 -168	12/ 5/67	INCL	6/21/67	4-B1 -389	
4-A1 -205	6/ 5/67	4-A1 -376	12/ 5/67	4-B1 -169	12/ 5/67	4-B1 -340	12/ 5/67	THRU	
4-A1 -206	6/ 5/67	4-A1 -377	6/ 5/67	4-B1 -170	12/ 5/67	4-B1 -341	12/ 5/67	4-B1 -508	
4-A1 -207	12/ 5/67	4-A1 -378	12/ 5/67	4-B1 -171	12/ 5/67	4-B1 -342	12/ 5/67	INCL	6/21/67
4-A1 -208	6/ 5/67	4-A1 -379	6/ 5/67	4-B1 -172	12/ 5/67	4-B1 343	12/ 5/67	4-AB2- 1	4/ 1/69
4-A1 -209	12/ 5/67	4-A1 -380	6/ 5/67	4-B1 -173	12/ 5/67	4-B1 344	12/ 5/67	4-AB2- 2	6/ 5/67
4-A1 -210	6/ 5/67	4-A1 -381	12/ 5/67	4-B1 -174	6/21/67	4-B1 -345	12/ 5/67	4-AB2- 3	5/11/67

SKILLING, HELLE, CHRISTIANSEN, ROBERTSON — Structural & Civil Engineers

PROJECT: THE WORLD TRADE CENTER | TITLE: EXTERIOR WALL - PANEL SCHEDULES AND DETAILS | DATE: 3/ 3/69

REVISIONS

4-AB1- 1	3/ 3/69	4-A1 -211	6/ 5/67	4-A1 -382	6/ 5/67	4-B1 -189	12/ 5/67	4-B1 -360	6/21/67
4-A1 - 2		4-A1 -212	12/ 5/67	4-A1 -383	12/ 5/67	4-B1 190	6/21/67	4-B1 -361	12/ 5/67
THRU		4-A1 -213	6/ 5/67	4-A1 -384	6/ 5/67	4-B1 191	6/21/67	4-B1 -362	6/21/67
4-A1 -165		4-A1 -214	12/ 5/67	4-A1 -385	6/ 5/67	4-B1 192	12/ 5/67	4-B1 -363	12/ 5/67
INCL.	6/ 5/67	4-A1 -215		4-A1 -386	12/ 5/67	4-B1 193	6/21/67	4-B1 -364	6/21/67
4-A1 -166	12/ 5/67	THRU		4-A1 -387	6/ 5/67	4-B1 194	12/ 5/67	4-B1 -365	6/21/67
4-A1 -167	12/ 5/67	4-A1 -339		4-A1 -388	12/ 5/67	4-B1 195	6/21/67	4-B1 -366	12/ 5/67
4-A1 -168	12/ 5/67	INCL	6/ 5/67	4-A1 -389		4-B1 196	6/21/67	4-B1 -367	6/21/67
4-A1 -169	12/ 5/67	4-A1 -340	12/ 5/67	THRU		4-B1 197	12/ 5/67	4-B1 -368	12/ 5/67
4-A1 -170	12/ 5/67	4-A1 -341	12/ 5/67	4-A1 -498		4-B1 198	6/21/67	4-B1 -369	6/21/67
4-A1 -171	12/ 5/67	4-A1 -342	12/ 5/67	INCL	6/ 5/67	4-B1 199	12/ 5/67	4-B1 -370	6/21/67
4-A1 -172	12/ 5/67	4-A1 -343	12/ 5/67	4-A1-499		4-B1 200	6/21/67	4-B1 -371	12/ 5/67
4-A1 -173	12/ 5/67	4-A1 -344	12/ 5/67	THRU		4-B1 201	6/21/67	4-B1 -372	6/21/67
4-A1 -174	6/ 5/67	4-A1 -345	12/ 5/67	4-A1-502		4-B1 202	12/ 5/67	4-B1 -373	12/ 5/67
4-A1 -175	6/ 5/67	4-A1 -346	12/ 5/67	INCL.	7/10/67	4-B1 203	6/21/67	4-B1 -374	6/21/67
4-A1 -176	12/ 5/67	4-A1 -347	12/ 5/67	4-A1-503		4-B1 204	12/ 5/67	4-B1 -375	6/21/67
4-A1 -177	12/ 5/67	4-A1 -348	6/ 5/67	THRU		4-B1 -205	6/21/67	4-B1 -376	12/ 5/67
4-A1 -178	6/ 5/67	4-A1 -349	6/ 5/67	4-A1-508		4-B1 -206	6/21/67	4-B1 -377	6/21/67
4-A1 -179	12/ 5/67	4-A1 -350	6/ 5/67	INCL.	6/ 5/67	4-B1 -207	12/ 5/67	4-B1 -378	12/ 5/67
4-A1 -180	6/ 5/67	4-A1 -351	12/ 5/67	4-B1 - 2		4-B1 -208	6/21/67	4-B1 -379	6/21/67
4-A1 -181	12/ 5/67	4-A1 -352	6/ 5/67	THRU		4-B1 -209	12/ 5/67	4-B1 -380	6/21/67
4-A1 -182	12/ 5/67	4-A1 -353	12/ 5/67	4-B1 - 30		4-B1 -210	6/21/67	4-B1 -381	12/ 5/67
4-A1 -183	6/ 5/67	4-A1 -354	6/ 5/67	INCL.	10/18/68	4-B1 -211	6/21/67	4-B1 -382	6/21/67
4-A1 -184	12/ 5/67	4-A1 -355	6/ 5/67	4-B1 - 31		4-B1 -212	12/ 5/67	4-B1 -383	12/ 5/67
4-A1 -185	6/ 5/67	4-A1 -356	12/ 5/67	THRU		4-B1 -213	6/21/67	4-B1 384	6/21/67
4-A1 -186	12/ 5/67	4-A1 -357	6/ 5/67	4-B1 -165		4-B1 -214	12/ 5/67	4-B1 385	6/21/67
4-A1 -187	12/ 5/67	4-A1 -358	12/ 5/67	INCL.	6/21/67	4-B1 -215		4-B1 386	12/ 5/67
4-A1 -188	6/ 5/67	4-A1 -359	6/ 5/67	4-B1 -166	12/ 5/67	THRU		4-B1 387	6/21/67
4-A1 -189	12/ 5/67	4-A1 -360	6/ 5/67	4-B1 -167	12/ 5/67	4-B1 -339		4-B1 388	12/ 5/67
4-A1 -190	6/ 5/67	4-A1 -361	12/ 5/67	4-B1 -168	12/ 5/67	INCL	6/21/67	4-B1 -389	
4-A1 -191	6/ 5/67	4-A1 -362	6/ 5/67	4-B1 -169	12/ 5/67	4-B1 -340	12/ 5/67	THRU	
4-A1 -192	12/ 5/67	4-A1 -363	12/ 5/67	4-B1 -170	12/ 5/67	4-B1 -341	12/ 5/67	4-B1 -508	
4-A1 -193	6/ 5/67	4-A1 -364	6/ 5/67	4-B1 -171	12/ 5/67	4-B1 -342	12/ 5/67	INCL	6/21/67
4-A1 -194	12/ 5/67	4-A1 -365	6/ 5/67	4-B1 -172	12/ 5/67	4-B1 343	12/ 5/67	4-AB2- 1	3/ 3/69
4-A1 -195	6/ 5/67	4-A1 -366	12/ 5/67	4-B1 -173	12/ 5/67	4-B1 344	12/ 5/67	4-AB2- 2	6/ 5/67
4-A1 -196	6/ 5/67	4-A1 -367	6/ 5/67	4-B1 -174	6/21/67	4-B1 -345	12/ 5/67	4-AB2- 3	5/11/67
4-A1 -197	12/ 5/67	4-A1 -368	12/ 5/67	4-B1 -175	6/21/67	4-B1 -346	12/ 5/67	4-AB2- 4	5/11/67
4-A1 -198	6/ 5/67	4-A1 -369	6/ 5/67	4-B1 -176	12/ 5/67	4-B1 -347	12/ 5/67	4-AB2- 5	5/11/67
4-A1 -199	12/ 5/67	4-A1 -370	6/ 5/67	4-B1 -177	12/ 5/67	4-B1 -348	6/21/67	4-AB2- 6	5/11/67
4-A1 -200	6/ 5/67	4-A1 -371	12/ 5/67	4-B1 -178	6/21/67	4-B1 -349	6/21/67	4-AB2- 7	11/ 7/67
4-A1 -201	6/ 5/67	4-A1 -372	6/ 5/67	4-B1 -179	12/ 5/67	4-B1 -350	6/21/67	4-AB2- 8	6/ 5/67
4-A1 -202	12/ 5/67	4-A1 -373	12/ 5/67	4-B1 -180	6/21/67	4-B1 -351	12/ 5/67	4-AB2- 9	6/ 5/67
4-A1 -203	6/ 5/67	4-A1 -374	6/ 5/67	4-B1 -181	12/ 5/67	4-B1 -352	6/21/67	4-AB2- 10	7/28/67
4-A1 -204	12/ 5/67	4-A1 -375	6/ 5/67	4-B1 -182	12/ 5/67	4-B1 -353	12/ 5/67	4-AB2- 11	11/ 7/67
4-A1 -205	6/ 5/67	4-A1 -376	12/ 5/67	4-B1 -183	6/21/67	4-B1 -354	6/21/67	4-AB2- 12	3/11/68
4-A1 -206	6/ 5/67	4-A1 -377	6/ 5/67	4-B1 -184	12/ 5/67	4-B1 -355	6/21/67	4-AB2- 13	3/11/68
4-A1 -207	12/ 5/67	4-A1 -378	12/ 5/67	4-B1 -185	6/21/67	4-B1 -356	12/ 5/67	4-AB2- 14	3/11/68
4-A1 -208	6/ 5/67	4-A1 -379	6/ 5/67	4-B1 -186	12/ 5/67	4-B1 -357	6/21/67	4-AB2- 15	3/11/68
4-A1 -209	12/ 5/67	4-A1 -380	6/ 5/67	4-B1 -187	12/ 5/67	4-B1 -358	12/ 5/67	4-AB2- 16	6/ 5/67
4-A1 -210	6/ 5/67	4-A1 -381	12/ 5/67	4-B1 -188	6/21/67	4-B1 -359	6/21/67	4-AB2- 17	6/ 5/67

REGISTERED PROFESSIONAL ENGINEER
LESLIE E. ROBERTSON
No. 34310
UNIVERSITY OF THE STATE OF NEW YORK

SKILLING, HELLE, CHRISTIANSEN, ROBERTSON — Structural & Civil Engineers

PROJECT: THE WORLD TRADE CENTER | TITLE: EXTERIOR WALL - PANEL SCHEDULES AND DETAILS | DATE: 2/ 3/69

REVISIONS

4-AB1- 1	2/ 3/69	4-A1 -211	6/ 5/67	4-A1 -382	6/ 5/67	4-B1 -189	12/ 5/67	4-B1 -360	6/21/67
4-A1 - 2		4-A1 -212	12/ 5/67	4-A1 -383	12/ 5/67	4-B1 190	6/21/67	4-B1 -361	12/ 5/67
THRU		4-A1 -213	6/ 5/67	4-A1 -384	6/ 5/67	4-B1 191	6/21/67	4-B1 -362	6/21/67
4-A1 -165		4-A1 -214	12/ 5/67	4-A1 -385	6/ 5/67	4-B1 192	12/ 5/67	4-B1 -363	12/ 5/67
INCL.	6/ 5/67	4-A1 -215		4-A1 -386	12/ 5/67	4-B1 193	6/21/67	4-B1 -364	6/21/67
4-A1 -166	12/ 5/67	THRU		4-A1 -387	6/ 5/67	4-B1 194	12/ 5/67	4-B1 -365	6/21/67
4-A1 -167	12/ 5/67	4-A1 -339		4-A1 -388	12/ 5/67	4-B1 195	6/21/67	4-B1 -366	12/ 5/67
4-A1 -168	12/ 5/67	INCL.	6/ 5/67	4-A1 -389		4-B1 196	6/21/67	4-B1 -367	6/21/67
4-A1 -169	12/ 5/67	4-A1 -340	12/ 5/67	THRU		4-B1 197	12/ 5/67	4-B1 -368	12/ 5/67
4-A1 -170	12/ 5/67	4-A1 -341	12/ 5/67	4-A1 -498		4-B1 198	6/21/67	4-B1 -369	6/21/67
4-A1 -171	12/ 5/67	4-A1 -342	12/ 5/67	INCL.	6/ 5/67	4-B1 199	12/ 5/67	4-B1 -370	6/21/67
4-A1 -172	12/ 5/67	4-A1 -343	12/ 5/67	4-A1-499		4-B1 200	6/21/67	4-B1 -371	12/ 5/67
4-A1 -173	12/ 5/67	4-A1 -344	12/ 5/67	THRU		4-B1 201	6/21/67	4-B1 -372	6/21/67
4-A1 -174	6/ 5/67	4-A1 -345	12/ 5/67	4-A1-502		4-B1 202	12/ 5/67	4-B1 -373	12/ 5/67
4-A1 -175	6/ 5/67	4-A1 -346	12/ 5/67	INCL.	7/10/67	4-B1 203	6/21/67	4-B1 -374	6/21/67
4-A1 -176	12/ 5/67	4-A1 -347	12/ 5/67	4-A1-503		4-B1 204	12/ 5/67	4-B1 -375	6/21/67
4-A1 -177	12/ 5/67	4-A1 -348	6/ 5/67	THRU		4-B1 -205	6/21/67	4-B1 -376	12/ 5/67
4-A1 -178	6/ 5/67	4-A1 -349	6/ 5/67	4-A1-508		4-B1 -206	6/21/67	4-B1 -377	6/21/67
4-A1 -179	12/ 5/67	4-A1 -350	6/ 5/67	INCL.	6/ 5/67	4-B1 -207	12/ 5/67	4-B1 -378	12/ 5/67
4-A1 -180	6/ 5/67	4-A1 -351	12/ 5/67	4-B1 - 2		4-B1 -208	6/21/67	4-B1 -379	6/21/67
4-A1 -181	12/ 5/67	4-A1 -352	6/ 5/67	THRU		4-B1 -209	12/ 5/67	4-B1 -380	6/21/67
4-A1 -182	12/ 5/67	4-A1 -353	12/ 5/67	4-B1 - 30		4-B1 -210	6/21/67	4-B1 -381	12/ 5/67
4-A1 -183	6/ 5/67	4-A1 -354	6/ 5/67	INCL.	10/18/68	4-B1 -211	6/21/67	4-B1 -382	6/21/67
4-A1 -184	12/ 5/67	4-A1 -355	6/ 5/67	4-B1 - 31		4-B1 -212	12/ 5/67	4-B1 -383	12/ 5/67
4-A1 -185	6/ 5/67	4-A1 -356	12/ 5/67	THRU		4-B1 -213	6/21/67	4-B1 384	6/21/67
4-A1 -186	12/ 5/67	4-A1 -357	6/ 5/67	4-B1 -165		4-B1 -214	12/ 5/67	4-B1 385	6/21/67
4-A1 -187	12/ 5/67	4-A1 -358	12/ 5/67	INCL.	6/21/67	4-B1 -215		4-B1 386	12/ 5/67
4-A1 -188	6/ 5/67	4-A1 -359	6/ 5/67	4-B1 -166	12/ 5/67	THRU		4-B1 387	6/21/67
4-A1 -189	12/ 5/67	4-A1 -360	6/ 5/67	4-B1 -167	12/ 5/67	4-B1 -339		4-B1 388	12/ 5/67
4-A1 -190	6/ 5/67	4-A1 -361	12/ 5/67	4-B1 -168	12/ 5/67	INCL	6/21/67	4-B1 -389	
4-A1 -191	6/ 5/67	4-A1 -362	6/ 5/67	4-B1 -169	12/ 5/67	4-B1 -340	12/ 5/67	THRU	
4-A1 -192	12/ 5/67	4-A1 -363	12/ 5/67	4-B1 -170	12/ 5/67	4-B1 -341	12/ 5/67	4-B1 -508	
4-A1 -193	6/ 5/67	4-A1 -364	6/ 5/67	4-B1 -171	12/ 5/67	4-B1 -342	12/ 5/67	INCL	6/21/67
4-A1 -194	12/ 5/67	4-A1 -365	6/ 5/67	4-B1 -172	12/ 5/67	4-B1 343	12/ 5/67	4-AB2- 1	2/ 3/68
4-A1 -195	6/ 5/67	4-A1 -366	12/ 5/67	4-B1 -173	12/ 5/67	4-B1 344	12/ 5/67	4-AB2- 2	6- 5-67
4-A1 -196	6/ 5/67	4-A1 -367	6/ 5/67	4-B1 -174	6/21/67	4-B1 -345	12/ 5/67	4-AB2- 3	5-11-67
4-A1 -197	12/ 5/67	4-A1 -368	12/ 5/67	4-B1 -175	6/21/67	4-B1 -346	12/ 5/67	4-AB2- 4	5-11-67
4-A1 -198	6/ 5/67	4-A1 -369	6/ 5/67	4-B1 -176	12/ 5/67	4-B1 -347	12/ 5/67	4-AB2- 5	5-11-67
4-A1 -199	12/ 5/67	4-A1 -370	6/ 5/67	4-B1 -177	12/ 5/67	4-B1 -348	6/21/67	4-AB2- 6	5-11-67
4-A1 -200	6/ 5/67	4-A1 -371	12/ 5/67	4-B1 -178	6/21/67	4-B1 -349	6/21/67	4-AB2- 7	11- 7-67
4-A1 -201	6/ 5/67	4-A1 -372	6/ 5/67	4-B1 -179	12/ 5/67	4-B1 -350	6/21/67	4-AB2- 8	6- 5-67
4-A1 -202	12/ 5/67	4-A1 -373	12/ 5/67	4-B1 -180	6/21/67	4-B1 -351	12/ 5/67	4-AB2- 9	6- 5-67
4-A1 -203	6/ 5/67	4-A1 -374	6/ 5/67	4-B1 -181	12/ 5/67	4-B1 -352	6/21/67	4-AB2- 10	7-28-67
4-A1 -204	12/ 5/67	4-A1 -375	6/ 5/67	4-B1 -182	12/ 5/67	4-B1 -353	12/ 5/67	4-AB2- 11	11- 7-67
4-A1 -205	6/ 5/67	4-A1 -376	12/ 5/67	4-B1 -183	6/21/67	4-B1 -354	6/21/67	4-AB2- 12	3/11/68
4-A1 -206	6/ 5/67	4-A1 -377	6/ 5/67	4-B1 -184	12/ 5/67	4-B1 -355	6/21/67	4-AB2- 13	3/11/68
4-A1 -207	12/ 5/67	4-A1 -378	12/ 5/67	4-B1 -185	6/21/67	4-B1 -356	12/ 5/67	4-AB2- 14	3/11/68
4-A1 -208	6/ 5/67	4-A1 -379	6/ 5/67	4-B1 -186	12/ 5/67	4-B1 -357	6/21/67	4-AB2- 15	3/11/68
4-A1 -209	12/ 5/67	4-A1 -380	6/ 5/67	4-B1 -187	12/ 5/67	4-B1 -358	12/ 5/67	4-AB2- 16	6- 5-67
4-A1 -210	6/ 5/67	4-A1 -381	12/ 5/67	4-B1 -188	6/21/67	4-B1 -359	6/21/67	4-AB2- 17	6- 5-67

LICENSED PROFESSIONAL ENGINEER — LESLIE E. ROBERTSON — No. 34360 — STATE OF NEW YORK

SKILLING, HELLE, CHRISTIANSEN, ROBERTSON — Structural & Civil Engineers

PROJECT: THE WORLD TRADE CENTER | TITLE: EXTERIOR WALL - PANEL SCHEDULES AND DETAILS | DATE: 1/ 3/69

REVISIONS

4-AP1- 1	1/ 3/69	4-A1 -211	6/ 5/67	4-A1 -382	6/ 5/67	4-B1 -189	12/ 5/67	4-B1 -360	6/21/67
4-A1 - 2		4-A1 -212	12/ 5/67	4-A1 -383	12/ 5/67	4-B1 190	6/21/67	4-B1 -361	12/ 5/67
THRU		4-A1 -213	6/ 5/67	4-A1 -384	6/ 5/67	4-B1 191	6/21/67	4-B1 -362	6/21/67
4-A1 -165		4-A1 -214	12/ 5/67	4-A1 -385	6/ 5/67	4-B1 192	12/ 5/67	4-B1 -363	12/ 5/67
INCL.	6/ 5/67	4-A1 -215		4-A1 -386	12/ 5/67	4-B1 193	6/21/67	4-B1 -364	6/21/67
4-A1 -166	12/ 5/67	THRU		4-A1 -387	6/ 5/67	4-B1 194	12/ 5/67	4-B1 -365	6/21/67
4-A1 -167	12/ 5/67	4-A1 -339		4-A1 -388	12/ 5/67	4-B1 195	6/21/67	4-B1 -366	12/ 5/67
4-A1 -168	12/ 5/67	INCL	6/ 5/67	4-A1 -389		4-B1 196	6/21/67	4-B1 -367	6/21/67
4-A1 -169	12/ 5/67	4-A1 -340	12/ 5/67	THRU		4-B1 197	12/ 5/67	4-B1 -368	12/ 5/67
4-A1 -170	12/ 5/67	4-A1 -341	12/ 5/67	4-A1 -498		4-B1 198	6/21/67	4-B1 -369	6/21/67
4-A1 -171	12/ 5/67	4-A1 -342	12/ 5/67	INCL	6/ 5/67	4-B1 199	12/ 5/67	4-B1 -370	6/21/67
4-A1 -172	12/ 5/67	4-A1 -343	12/ 5/67	4-A1-499		4-B1 200	6/21/67	4-B1 -371	12/ 5/67
4-A1 -173	12/ 5/67	4-A1 -344	12/ 5/67	THRU		4-B1 201	6/21/67	4-B1 -372	6/21/67
4-A1 -174	6/ 5/67	4-A1 -345	12/ 5/67	4-A1-502		4-B1 202	12/ 5/67	4-B1 -373	12/ 5/67
4-A1 -175	6/ 5/67	4-A1 -346	12/ 5/67	INCL.	7/10/67	4-B1 203	6/21/67	4-B1 -374	6/21/67
4-A1 -176	12/ 5/67	4-A1 -347	12/ 5/67	4-A1-503		4-B1 204	12/ 5/67	4-B1 -375	6/21/67
4-A1 -177	12/ 5/67	4-A1 -348	6/ 5/67	THRU		4-B1 -205	6/21/67	4-B1 -376	12/ 5/67
4-A1 -178	6/ 5/67	4-A1 -349	6/ 5/67	4-A1-508		4-B1 -206	6/21/67	4-B1 -377	6/21/67
4-A1 -179	12/ 5/67	4-A1 -350	6/ 5/67	INCL.	6/ 5/67	4-B1 -207	12/ 5/67	4-B1 -378	12/ 5/67
4-A1 -180	6/ 5/67	4-A1 -351	12/ 5/67	4-B1 - 2		4-B1 -208	6/21/67	4-B1 -379	6/21/67
4-A1 -181	12/ 5/67	4-A1 -352	6/ 5/67	THRU		4-B1 -209	12/ 5/67	4-B1 -380	6/21/67
4-A1 -182	12/ 5/67	4-A1 -353	12/ 5/67	4-B1 - 30		4-B1 -210	6/21/67	4-B1 -381	12/ 5/67
4-A1 -183	6/ 5/67	4-A1 -354	6/ 5/67	INCL.	10/18/68	4-B1 -211	6/21/67	4-B1 -382	6/21/67
4-A1 -184	12/ 5/67	4-A1 -355	6/ 5/67	4-B1 - 31		4-B1 -212	12/ 5/67	4-B1 -383	12/ 5/67
4-A1 -185	6/ 5/67	4-A1 -356	12/ 5/67	THRU		4-B1 -213	6/21/67	4-B1 384	6/21/67
4-A1 -186	12/ 5/67	4-A1 -357	6/ 5/67	4-B1 -165		4-B1 -214	12/ 5/67	4-B1 385	6/21/67
4-A1 -187	12/ 5/67	4-A1 -358	12/ 5/67	INCL.	6/21/67	4-B1 -215		4-B1 386	12/ 5/67
4-A1 -188	6/ 5/67	4-A1 -359	6/ 5/67	4-B1 -166	12/ 5/67	THRU		4-B1 387	6/21/67
4-A1 -189	12/ 5/67	4-A1 -360	6/ 5/67	4-B1 -167	12/ 5/67	4-B1 -339		4-B1 388	12/ 5/67
4-A1 -190	6/ 5/67	4-A1 -361	12/ 5/67	4-B1 -168	12/ 5/67	INCL	6/21/67	4-B1 -389	
4-A1 -191	6/ 5/67	4-A1 -362	6/ 5/67	4-B1 -169	12/ 5/67	4-B1 -340	12/ 5/67	THRU	
4-A1 -192	12/ 5/67	4-A1 -363	12/ 5/67	4-B1 -170	12/ 5/67	4-B1 -341	12/ 5/67	4-B1 -508	
4-A1 -193	6/ 5/67	4-A1 -364	6/ 5/67	4-B1 -171	12/ 5/67	4-B1 -342	12/ 5/67	INCL	6/21/67
4-A1 -194	12/ 5/67	4-A1 -365	6/ 5/67	4-B1 -172	12/ 5/67	4-B1 343	12/ 5/67	4-AB2- 1	6/ 3/68
4-A1 -195	6/ 5/67	4-A1 -366	12/ 5/67	4-B1 -173	12/ 5/67	4-B1 344	12/ 5/67	4-AB2- 2	6- 5-67
4-A1 -196	6/ 5/67	4-A1 -367	6/ 5/67	4-B1 -174	6/21/67	4-B1 -345	12/ 5/67	4-AB2- 3	5-11-67
4-A1 -197	12/ 5/67	4-A1 -368	12/ 5/67	4-B1 -175	6/21/67	4-B1 -346	12/ 5/67	4-AB2- 4	5-11-67
4-A1 -198	6/ 5/67	4-A1 -369	6/ 5/67	4-B1 -176	12/ 5/67	4-B1 -347	12/ 5/67	4-AB2- 5	5-11-67
4-A1 -199	12/ 5/67	4-A1 -370	6/ 5/67	4-B1 -177	12/ 5/67	4-B1 -348	6/21/67	4-AB2- 6	5-11-67
4-A1 -200	6/ 5/67	4-A1 -371	12/ 5/67	4-B1 -178	6/21/67	4-B1 -349	6/21/67	4-AB2- 7	11- 7-67
4-A1 -201	6/ 5/67	4-A1 -372	6/ 5/67	4-B1 -179	12/ 5/67	4-B1 -350	6/21/67	4-AB2- 8	6- 5-67
4-A1 -202	12/ 5/67	4-A1 -373	12/ 5/67	4-B1 -180	6/21/67	4-B1 -351	12/ 5/67	4-AB2- 9	6- 5-67
4-A1 -203	6/ 5/67	4-A1 -374	6/ 5/67	4-B1 -181	12/ 5/67	4-B1 -352	6/21/67	4-AB2- 10	7-28-67
4-A1 -204	12/ 5/67	4-A1 -375	6/ 5/67	4-B1 -182	12/ 5/67	4-B1 -353	12/ 5/67	4-AB2- 11	11- 7-67
4-A1 -205	6/ 5/67	4-A1 -376	12/ 5/67	4-B1 -183	6/21/67	4-B1 -354	6/21/67	4-AB2- 12	3/11/68
4-A1 -206	6/ 5/67	4-A1 -377	6/ 5/67	4-B1 -184	12/ 5/67	4-B1 -355	6/21/67	4-AB2- 13	3/11/68
4-A1 -207	12/ 5/67	4-A1 -378	12/ 5/67	4-B1 -185	6/21/67	4-B1 -356	12/ 5/67	4-AB2- 14	3/11/68
4-A1 -208	6/ 5/67	4-A1 -379	6/ 5/67	4-B1 -186	12/ 5/67	4-B1 -357	6/21/67	4-AB2- 15	3/11/68
4-A1 -209	12/ 5/67	4-A1 -380	6/ 5/67	4-B1 -187	12/ 5/67	4-B1 -358	12/ 5/67	4-AB2- 16	6- 5-67
4-A1 -210	6/ 5/67	4-A1 -381	12/ 5/67	4-B1 -188	6/21/67	4-B1 -359	6/21/67	4-AB2- 17	6- 5-67

LICENSED PROFESSIONAL ENGINEER
LESLIE E. ROBERTSON
No. 34360
UNIVERSITY OF THE STATE OF NEW YORK

SKILLING-HELLE-CHRISTIANSEN-ROBERTSON — Civil & Structural Engineers

PROJECT: THE WORLD TRADE CENTER | TITLE: EXTERIOR WALL - PANEL SCHEDULES AND DETAILS | DATE: 3/11/68

REVISIONS

4-AB1- 1 6-8-68
4-A1 - 2 6/5/67
THRU
4-A1 -165 INCL.
4-A1 -166 12/ 5/67
4-A1 -167 12/ 5/67
4-A1 -168 12/ 5/67
4-A1 -169 12/ 5/67
4-A1 -170 12/ 5/67
4-A1 -171 12/ 5/67
4-A1 -172 12/ 5/67
4-A1 -173 12/ 5/67
4-A1 -174 6/ 5/67
4-A1 -175 6/ 5/67
4-A1 -176 12/ 5/67
4-A1 -177 12/ 5/67
4-A1 -178 6/ 5/67
4-A1 -179 12/ 5/67
4-A1 -180 6/ 5/67
4-A1 -181 12/ 5/67
4-A1 -182 12/ 5/67
4-A1 -183 6/ 5/67
4-A1 -184 12/ 5/67
4-A1 -185 6/ 5/67
4-A1 -186 12/ 5/67
4-A1 -187 12/ 5/67
4-A1 -188 6/ 5/67
4-A1 -189 12/ 5/67
4-A1 -190 6/ 5/67
4-A1 -191 6/ 5/67
4-A1 -192 12/ 5/67
4-A1 -193 6/ 5/67
4-A1 -194 12/ 5/67
4-A1 -195 6/ 5/67
4-A1 -196 6/ 5/67
4-A1 -197 12/ 5/67
4-A1 -198 6/ 5/67
4-A1 -199 12/ 5/67
4-A1 -200 6/ 5/67
4-A1 -201 6/ 5/67
4-A1 -202 12/ 5/67
4-A1 -203 6/ 5/67
4-A1 -204 12/ 5/67
4-A1 -205 6/ 5/67
4-A1 -206 6/ 5/67
4-A1 -207 12/ 5/67
4-A1 -208 6/ 5/67
4-A1 -209 12/ 5/67
4-A1 -210 6/ 5/67
4-A1 -212 12/ 5/67
4-A1 -213 6/ 5/67
4-A1 -214 12/ 5/67
4-A1 -215
THRU
4-A1 -339
INCL
6/ 5/67
THRU
4-A1 -340
12/ 5/67
THRU
4-A1 -341
12/ 5/67
THRU
4-A1 -342
12/ 5/67
THRU
4-A1 -343
12/ 5/67
THRU
4-A1 -344
12/ 5/67
THRU
4-A1 -345
12/ 5/67
THRU
4-A1 -346
12/ 5/67
THRU
4-A1 -347
12/ 5/67
THRU
4-A1 -348
12/ 5/67
THRU
4-A1 -349
6/ 5/67
INCL.
6- 5-67
4-AB1- 1 6-3-68
4-B1 - 2
THRU
4-B1 -165
6/ 5/67
INCL.
6-21-67
4-B1 -166 12/ 5/67
4-B1 -167 12/ 5/67
4-B1 -168 12/ 5/67
4-B1 -169 12/ 5/67
4-B1 -170 12/ 5/67
4-B1 -171 12/ 5/67
4-B1 -172 12/ 5/67
4-B1 -173 12/ 5/67
4-B1 -174 6/21/67
4-B1 -175 6/21/67
4-B1 -176 12/ 5/67
4-B1 -177 12/ 5/67
4-B1 -178 6/21/67
4-B1 -179 12/ 5/67
4-B1 -180 6/21/67
4-B1 -181 12/ 5/67
4-B1 -182 12/ 5/67
4-B1 -183 6/21/67
4-B1 -184 12/ 5/67
4-B1 -185 6/21/67
4-B1 -186 12/ 5/67
4-B1 -187 12/ 5/67
4-B1 -188 6/21/67
4-B1 -189 12/ 5/67
4-B1 190 6/21/67
4-B1 191 6/21/67
4-B1 -192 12/ 5/67
4-B1 -193 6/21/67
4-B1 -194 12/ 5/67
4-B1 -195 6/21/67
4-B1 -196 6/21/67
4-B1 -197 12/ 5/67
4-B1 -198 6/21/67
4-B1 -199 12/ 5/67
4-B1 200 6/21/67
4-B1 201 6/21/67
4-B1 202 12/ 5/67
4-B1 203 6/21/67
4-B1 204 12/ 5/67
4-B1 -205 6/21/67
4-B1 -206 6/21/67
4-B1 -207 12/ 5/67
4-B1 -208 6/21/67
4-B1 -209 12/ 5/67
4-B1 -210 6/21/67
4-B1 -211 6/21/67
4-B1 -212 12/ 5/67
4-B1 -213 6/21/67
4-B1 -214 12/ 5/67
4-B1 -215
THRU
4-B1 -339
INCL 6/21/67
THRU
4-B1 -340 12/ 5/67
4-B1 -341 12/ 5/67
4-B1 -342 12/ 5/67
4-B1 343 12/ 5/67
4-B1 344 12/ 5/67
4-B1 -345 12/ 5/67
4-B1 -346 12/ 5/67
4-B1 -347 12/ 5/67
4-B1 -351 12/ 5/67
4-B1 -348 6/21/67
4-B1 -349 6/21/67
4-B1 -350 6/21/67
4-B1 -352 6/21/67
4-B1 -353 12/5/67
4-B1 -354 6/21/67
4-B1 -355 6/21/67
4-B1 -356 12/ 5/67
4-B1 -357 6/21/67
4-B1 -358 12/ 5/67
4-B1 -359 6/21/67
4-B1 -360 6/21/67
4-B1 -361 12/ 5/67
4-B1 -362 6/21/67
4-B1 -363 6/21/67
4-B1 -364 6/21/67
4-B1 -365 6/21/67
4-B1 -366 12/ 5/67
4-B1 -367 6/21/67
4-B1 -368 12/ 5/67
4-B1 -369 6/21/67
4-B1 -370 6/21/67
4-B1 -371 12/ 5/67
4-B1 -372 6/21/67
4-B1 -373 12/ 5/67
4-B1 -374 6/21/67
4-B1 -375 6/21/67
4-B1 -376 12/ 5/67
4-B1 -377 6/21/67
4-B1 -378 12/ 5/67
4-B1 -379 6/21/67
4-B1 -380 6/21/67
4-B1 -381 12/ 5/67
4-B1 -382 6/21/67
4-B1 -383 12/ 5/67
4-B1 384 6/21/67
4-B1 385 6/21/67
4-B1 386 12/ 5/67
4-B1 387 6/21/67
4-B1 388 12/ 5/67
4-B1 -389
INCL
6/21/67
4-AB2- 1 6/13/68
4-AB2- 2 6- 5-67
4-AB2- 3 5-11-67
4-AB2- 4 5-11-67
4-AB2- 5 5-11-67
4-AB2- 6 5-11-67
4-AB2- 7 11- 7-67
4-AB2- 8 6- 5-67
4-AB2- 9 6- 5-67
4-AB2- 10 7-28-67
4-AB2- 11 11- 7-67
4-AB2- 12 3-11-68
4-AB2- 13 3-11-68
4-AB2- 14 3-11-68
4-AB2- 15 3-11-68
4-AB2- 16 6- 5-67
4-AB2- 17 6- 5-67
4-AB2- 18 11- 7-67
4-AB2- 19 6- 5-67
4-AB2- 20 6- 5-67
4-B1 -508
INCL
6/21/67

LICENSED PROFESSIONAL ENGINEER
LESLIE E. ROBERTSON
No. 34360
UNIVERSITY OF THE STATE OF NEW YORK

SKILLING, HELLE, CHRISTIANSEN, ROBERTSON — Structural & Civil Engineers

PROJECT: THE WORLD TRADE CENTER | TITLE: EXTERIOR WALL - PANEL SCHEDULES AND DETAILS | DATE: 11/26/71

REVISIONS

4-B1 -361	12/ 5/67	INCL		11/10/69	4-B3 -	2.3	8/ 3/70
4-B1 -362	5/14/69	4-B1 -508		11/10/69	4-B3 -	2.4	8/ 3/70
4-B1 -363	12/ 5/67	4-AB2-	1	3/16/70	4-AB3-	3	3/16/70
4-B1 -364	6/21/67	4-AB2-	2	7/18/69	4-AB3-	4	3/16/70
4-B1 -365	5/14/69	4-AB2-	3	5/11/67	4-AB3-	5.1	8/ 3/70
4-B1 -366	12/ 5/67	4-AB2-	4	7/18/69	4-AB3-	5.2	8/ 3/70
4-B1 -367	5/14/69	4-AB2-	5	7/18/69	4-AB3-	6	8/ 3/70
4-B1 -368	12/ 5/67	4-AB2-	6	5/11/67	4-AB3-	7.1	8/ 3/70
4-B1 -369	6/21/67	4-AB2-	7	11/ 7/67	4-AB3-	7.2	4/27/70
4-B1 -370	5/14/69	4-AB2-	8	3/16/70	4-AB3-	7.3	8/ 3/70
4-B1 -371	12/ 5/67	4-AB2-	9	6/ 5/67	4-AB3-	8.1	8/ 3/70
4-B1 -372	5/14/69	4-AB2-	10	7/20/67	4-AB3-	8.2	8/ 3/70
4-B1 -373	12/ 5/67	4-AB2-	11	3/16/70	4-AB3-	9	4/10/70
4-B1 -374	6/21/67	4-AB2-	12	3/11/68	4-AB3-	10	4/27/70
4-B1 -375	6/21/67	4-AB2-	13	3/11/68	4-AB3-	11	8/ 3/70
4-B1 -376	5/14/69	4-AB2-	14	3/11/68			
4-B1 -377	6/21/67	4-AB2-	15	5/14/69			
4-B1 -378	5/14/69	4-AB2-	16	6/ 5/67			
4-B1 -379	6/21/67	4-AB2-	17	6/ 5/67			
4-B1 -380	6/21/67	4-AB2-	18	11/ 7/67			
4-B1 -381	5/14/69	4-AB2-	19	3/16/70			
4-B1 -382	6/21/67	4-AB2-	19.1	3/16/70			
4-B1 -383	5/14/69	4-AB2-	20	VOID.			
4-B1 384	6/21/67	4-AB2-	21	7/28/67			
4-B1 385	6/21/67	4-AB2-	22	6/ 5/67			
4-B1 386	5/14/69	4-AB2-	23	11/ 7/67			
4-B1 387	6/21/67	4-AB2-	24	7/28/67			
4-B1 388	5/14/69	4-AB2-	25	6/ 5/67			
4-B1 -389		4-AB2-	26	6/ 5/67			
THRU		4-AB2-	27	7/18/69			
4-B1 -484		4-AB2-	28	6/ 5/67			
INCL	6/21/67	4-AB2-	29	3/11/68			
4-B1 -485		4-AB2-	30	7/18/69			
THRU		4-AB2-	31	11/ 7/67			
4-B1 -488		4-AB2-	32	3/16/70			
INCL	9/ 2/69	4-AB2-	33	3/16/70			
4-B1 -489	6/21/67	4-AB2-	33.1	10/18/68			
4-B1 -490		4-AB2-	34	3/16/70			
THRU		4-AB2-	35	10/18/68			
4-B1 -493		4-AB2-	36	3/12/69			
INCL	9/ 2/69	4-AB2-	37	11/10/69			
4-B1 -494	6/21/67						
4-B1 -495							
THRU		4-AB3-	1	8/ 3/70			
4-B1 -502		4-A3 -	2.1	8/ 3/70			
INCL	11/10/69	4-A3 -	2.2	8/ 3/70			
4-B1 -503	11/10/69	4-A3 -	2.3	8/ 3/70			
4-B1 -504		4-A3 -	2.4	8/ 3/70			
THRU		4-B3 -	2.1	8/ 3/70			
4-B1 -507		4-B3 -	2.2	8/ 3/70			

LICENSED PROFESSIONAL ENGINEER — LESLIE E. ROBERTSON — No. 34360 — UNIVERSITY OF THE STATE OF NEW YORK

SKILLING, HELLE, CHRISTIANSEN, ROBERTSON — Structural & Civil Engineers

PROJECT	TITLE	DATE
THE WORLD TRADE CENTER	EXTERIOR WALL - PANEL SCHEDULES AND DETAILS	1/02/70

REVISIONS

4-B1 -363	12/ 5/67	4-AB2- 1	11/10/69	4-AB3- 3	12/15/69
4-B1 -364	6/21/67	4-AB2- 2	7/18/69	4-AB3- 4	12/15/69
4-B1 -365	5/14/69	4-AB2- 3	5/11/67	4-AB3- 5.1	12/15/69
4-B1 -366	12/ 5/67	4-AB2- 4	7/10/69	4-AB3- 5.2	12/15/69
4-B1 -367	5/14/69	4-AB2- 5	7/10/69	4-AB3- 6	12/15/69
4-B1 -368	12/ 5/67	4-AB2- 6	5/11/67	4-AB3- 7.1	12/15/69
4-B1 -369	6/21/67	4-AB2- 7	11/ 7/67	4-AB3- 7.2	12/15/69
4-B1 -370	5/14/69	4-AB2- 8	6/ 5/67	4-AB3- 8	12/15/69
4-B1 -371	12/ 5/67	4-AB2- 9	6/ 5/67	4-AB3- 9	12/15/69
4-B1 -372	5/14/69	4-AB2- 10	7/28/67	4-AB3- 10	12/15/69
4-B1 -373	12/ 5/67	4-AB2- 11	11/ 7/67	4-AB3- 11	12/15/69
4-B1 -374	6/21/67	4-AB2- 12	3/11/68		
4-B1 -375	6/21/67	4-AB2- 13	3/11/68		
4-B1 -376	5/14/69	4-AB2- 14	3/11/68		
4-B1 -377	6/21/67	4-AB2- 15	5/14/69		
4-B1 -378	5/14/69	4-AB2- 16	6/ 5/67		
4-B1 -379	6/21/67	4-AB2- 17	6/ 5/67		
4-B1 -380	6/21/67	4-AB2- 18	11/ 7/67		
4-B1 -381	5/14/69	4-AB2- 19	7/18/69		
4-B1 -382	6/21/67	4-AB2- 19.1	8/15/69		
4-B1 -383	5/14/69	4-AB2- 20	VOID.		
4-B1 -384	6/21/67	4-AB2- 21	7/28/67		
4-B1 -385	6/21/67	4-AB2- 22	6/ 5/67		
4-B1 -386	5/14/69	4-AB2- 23	11/ 7/67		
4-B1 -387	6/21/67	4-AB2- 24	7/28/67		
4-B1 -388	5/14/69	4-AB2- 25	6/ 5/67		
4-B1 -389		4-AB2- 26	6/ 5/67		
THRU	=	4-AB2- 27	7/18/69		
4-B1 -484		4-AB2- 28	6/ 5/67		
INCL	6/21/67	4-AB2- 29	3/11/68		
4-B1 -485		4-AB2- 30	7/10/69		
THRU		4-AB2- 31	11/ 7/67		
4-B1 -488		4-AB2- 32	11/10/69		
INCL	9/ 2/69	4-AB2- 33	10/18/68		
4-B1 -489	6/21/67	4-AB2-33.1	10/18/68		
4-B1 -490	=	4-AB2- 34	11/ 7/67		
THRU		4-AB2- 35	10/18/68		
4-B1 -493		4-AB2- 36	3/12/69		
INCL	9/ 2/69	4-AB2- 37	11/10/69		
4-B1 -494	6/21/67				
4-B1 -495					
THRU		4-AB3- 1	12/15/69		
4-B1 -502		4-A3 - 2.1	12/15/69		
INCL	11/10/69	4-A3 - 2.2	12/15/69		
4-B1 -503	11/10/69	4-A3 - 2.3	12/15/69		
4-B1 -504		4-A3 - 2.4	12/15/69		
THRU		4-B3 - 2.1	12/15/69		
4-B1 -507		4-B3 - 2.2	12/15/69		
INCL	11/10/69	4-B3 - 2.3	12/15/69		
4-B1 -508	11/10/69	4-B3 - 2.4	12/15/69		

LICENSED PROFESSIONAL ENGINEER ★ LESLIE E. ROBERTSON ★ No. 34360 ★ UNIVERSITY OF THE STATE OF NEW YORK

SKILLING, HELLE, CHRISTIANSEN, ROBERTSON — Structural & Civil Engineers

PROJECT: THE WORLD TRADE CENTER | TITLE: EXTERIOR WALL - PANEL SCHEDULES AND DETAILS | DATE: 12/ 1/69

REVISIONS

4-B1 -363	12/ 5/67	4-AB2-	1	11/10/69	4-AB3-	3	8/15/69
4-B1 -364	6/21/67	4-AB2-	2	7/18/69	4-AB3-	4	8/15/69
4-B1 -365	5/14/69	4-AB2-	3	5/11/67	4-AB3-	5	VOID.
4-B1 -366	12/ 5/67	4-AB2-	4	7/18/69	4-AB3-	5.1	8/15/69
4-B1 -367	5/14/69	4-AB2-	5	7/18/69	4-AB3-	5.2	8/15/69
4-B1 -368	12/ 5/67	4-AB2-	6	5/11/67	4-AB3-	6	8/15/69
4-B1 -369	6/21/67	4-AB2-	7	11/ 7/67	4-AB3-	7	HOLD
4-B1 -370	5/14/69	4-AB2-	8	6/ 5/67	4-AB3-	8	HOLD
4-B1 -371	12/ 5/67	4-AB2-	9	6/ 5/67	4-AB3-	9	8/15/69
4-B1 -372	5/14/69	4-AB2-	10	7/28/67	4-AB3-	10	8/15/69
4-B1 -373	12/ 5/67	4-AB2-	11	11/ 7/67			
4-B1 -374	6/21/67	4-AB2-	12	3/11/68			
4-B1 -375	6/21/67	4-AB2-	13	3/11/68			
4-B1 -376	5/14/69	4-AB2-	14	3/11/68			
4-B1 -377	6/21/67	4-AB2-	15	5/14/69			
4-B1 -378	5/14/69	4-AB2-	16	6/ 5/67			
4-B1 -379	6/21/67	4-AB2-	17	6/ 5/67			
4-B1 -380	6/21/67	4-AB2-	18	11/ 7/67			
4-B1 -381	5/14/69	4-AB2-	19	7/18/69			
4-B1 -382	6/21/67	4-AB2-	19.1	8/15/69			
4-B1 -383	5/14/69	4-AB2-	20	VOID.			
4-B1 -384	6/21/67	4-AB2-	21	7/28/67			
4-B1 -385	6/21/67	4-AB2-	22	6/ 5/67			
4-B1 -386	5/14/69	4-AB2-	23	11/ 7/67			
4-B1 -387	6/21/67	4-AB2-	24	7/28/67			
4-B1 -388	5/14/69	4-AB2-	25	6/ 5/67			
4-B1 -389		4-AB2-	26	6/ 5/67			
THRU		4-AB2-	27	7/18/69			
4-B1 -484		4-AB2-	28	6/ 5/67			
INCL	6/21/67	4-AB2-	29	3/11/68			
4-B1 -485		4-AB2-	30	7/18/69			
THRU		4-AB2-	31	11/ 7/67			
4-B1 -488		4-AB2-	32	11/10/69			
INCL	9/ 2/69	4-AB2-	33	10/18/68			
4-B1 -489	6/21/67	4-AB2-	33.1	10/18/68			
4-B1 -490		4-AB2-	34	11/ 7/67			
THRU		4-AB2-	35	10/18/68			
4-B1 -493		4-AB2-	36	3/12/69			
INCL	9/ 2/69	4-AB2-	37	11/10/69			
4-B1 -494	6/21/67						
4-B1 -495							
THRU		4-AB3-	1	8/15/69			
4-B1 -502		4-A3 -	2.1	10/23/69			
INCL	11/10/69	4-A3 -	2.2	10/23/69			
4-B1 -503	11/10/69	4-A3 -	2.3	10/23/69			
4-B1 -504		4-A3 -	2.4	10/23/69			
THRU		4-B3 -	2.1	10/23/69			
4-B1 -507		4-B3 -	2.2	10/23/69			
INCL	11/10/69	4-B3 -	2.3	10/23/69			
4-B1 -508	11/10/69	4-B3 -	2.4	10/23/69			

LICENSED PROFESSIONAL ENGINEER
LESLIE E. ROBERTSON
No. 34360
UNIVERSITY OF THE STATE OF NEW YORK

SKILLING, HELLE, CHRISTIANSEN, ROBERTSON — Structural & Civil Engineers

PROJECT	TITLE	DATE
THE WORLD TRADE CENTER	EXTERIOR WALL - PANEL SCHEDULES AND DETAILS	11/ 3/69

REVISIONS

4-B1 -363	12/ 5/67	4-AB2-	1	5/ 1/69	4-AB3- 4	8/15/69
4-B1 -364	6/21/67	4-AB2-	2	7/18/69	4-AB3- 5	VOID
4-B1 -365	5/14/69	4-AB2-	3	5/11/67	4-AB3- 5.1	8/15/69
4-B1 -366	12/ 5/67	4-AB2-	4	7/18/69	4-AB3- 5.2	8/15/69
4-B1 -367	5/14/69	4-AB2-	5	7/18/69	4-AB3- 6	8/15/69
4-B1 -368	12/ 5/67	4-AB2-	6	5/11/67	4-AB3- 7	HOLD
4-B1 -369	6/21/67	4-AB2-	7	11/ 7/67	4-AB3- 8	HOLD
4-B1 -370	5/14/69	4-AB2-	8	6/ 5/67	4-AB3- 9	8/15/69
4-B1 -371	12/ 5/67	4-AB2-	9	6/ 5/67	4-AB3- 10	8/15/69
4-B1 -372	5/14/69	4-AB2-	10	7/28/67		
4-B1 -373	12/ 5/67	4-AB2-	11	11/ 7/67		
4-B1 -374	6/21/67	4-AB2-	12	3/11/68		
4-B1 -375	6/21/67	4-AB2-	13	3/11/68		
4-B1 -376	5/14/69	4-AB2-	14	3/11/68		
4-B1 -377	6/21/67	4-AB2-	15	5/14/69		
4-B1 -378	5/14/69	4-AB2-	16	6/ 5/67		
4-B1 -379	6/21/67	4-AB2-	17	6/ 5/67		
4-B1 -380	6/21/67	4-AB2-	18	11/ 7/67		
4-B1 -381	5/14/69	4-AB2-	19	7/18/69		
4-B1 -382	6/21/67	4-AB2-	19.1	8/15/69		
4-B1 -383	5/14/69	4-AB2-	20	VOID.		
4-B1 384	6/21/67	4-AB2-	21	7/28/67		
4-B1 385	6/21/67	4-AB2-	22	6/ 5/67		
4-B1 386	5/14/69	4-AB2-	23	11/ 7/67		
4-B1 387	6/21/67	4-AB2-	24	7/28/67		
4-B1 388	5/14/69	4-AB2-	25	6/ 5/67		
4-B1 -389		4-AB2-	26	6/ 5/67		
THRU		4-AB2-	27	7/18/69		
4-B1 -484		4-AB2-	28	6/ 5/67		
INCL	6/21/67	4-AB2-	29	3/11/68		
4-B1 -485		4-AB2-	30	7/18/69		
THRU		4-AB2-	31	11/ 7/67		
4-B1 -488		4-AB2-	32	3/12/69		
INCL	9/ 2/69	4-AB2-	33	10/18/68		
4-B1 -489	6/21/67	4-AB2-	33.1	10/18/68		
4-B1 -490		4-AB2-	34	11/ 7/67		
THRU		4-AB2-	35	10/18/68		
4-B1 -493		4-AB2-	36	3/12/69		
INCL	9/ 2/69					
4-B1 -494	6/21/67					
4-B1 -495		4-AB3-	1	8/15/69		
THRU		4-A3 -	2.1	10/23/69		
4-B1 -502		4-A3 -	2.2	10/23/69		
INCL	9/ 2/69	4-A3 -	2.3	10/23/69		
4-B1 -503	6/21/67	4-A3 -	2.4	10/23/69		
4-B1 -504		4-B3 -	2.1	10/23/69		
THRU		4-B3 -	2.2	10/23/69		
4-B1 -507		4-B3 -	2.3	10/23/69		
INCL	9/ 2/69	4-B3 -	2.4	10/23/69		
4-B1 -508	6/21/67	4-AB3-	3	8/15/69		

LICENSED PROFESSIONAL ENGINEER
LESLIE E. ROBERTSON
No. 34360
UNIVERSITY OF THE STATE OF NEW YORK

SKILLING, HELLE, CHRISTIANSEN, ROBERTSON — Structural & Civil Engineers

PROJECT: THE WORLD TRADE CENTER | TITLE: EXTERIOR WALL - PANEL SCHEDULES AND DETAILS | DATE: 10/ 1/69

REVISIONS

4-B1 -363	12/ 5/67	4-AB2-	1	5/ 1/69	4-AB3-	4	8/15/69
4-B1 -364	6/21/67	4-AB2-	2	7/18/69	4-AB3-	5	VOID
4-B1 -365	5/14/69	4-AB2-	3	5/11/67	4-AB3-	5.1	8/15/69
4-B1 -366	12/ 5/67	4-AB2-	4	7/18/69	4-AB3-	5.2	8/15/69
4-B1 -367	5/14/69	4-AB2-	5	7/18/69	4-AB3-	6	8/15/69
4-B1 -368	12/ 5/67	4-AB2-	6	5/11/67	4-AB3-	7	HOLD
4-B1 -369	6/21/67	4-AB2-	7	11/ 7/67	4-AB3-	8	HOLD
4-B1 -370	5/14/69	4-AB2-	8	6/ 5/67	4-AB3-	9	8/15/69
4-B1 -371	12/ 5/67	4-AB2-	9	6/ 5/67	4-AB3-	10	8/15/69
4-B1 -372	5/14/69	4-AB2-	10	7/28/67			
4-B1 -373	12/ 5/67	4-AB2-	11	11/ 7/67			
4-B1 -374	6/21/67	4-AB2-	12	3/11/68			
4-B1 -375	6/21/67	4-AB2-	13	3/11/68			
4-B1 -376	5/14/69	4-AB2-	14	3/11/68			
4-B1 -377	6/21/67	4-AB2-	15	5/14/69			
4-B1 -378	5/14/69	4-AB2-	16	6/ 5/67			
4-B1 -379	6/21/67	4-AB2-	17	6/ 5/67			
4-B1 -380	6/21/67	4-AB2-	18	11/ 7/67			
4-B1 -381	5/14/69	4-AB2-	19	7/18/69			
4-B1 -382	6/21/67	4-AB2-	19.1	8/15/69			
4-B1 -383	5/14/69	4-AB2-	20	VOID.			
4-B1 384	6/21/67	4-AB2-	21	7/28/67			
4-B1 385	6/21/67	4-AB2-	22	6/ 5/67			
4-B1 386	5/14/69	4-AB2-	23	11/ 7/67			
4-B1 387	6/21/67	4-AB2-	24	7/28/67			
4-B1 388	5/14/69	4-AB2-	25	6/ 5/67			
4-B1 -389		4-AB2-	26	6/ 5/67			
THRU		4-AB2-	27	7/18/69			
4-B1 -484		4-AB2-	28	6/ 5/67			
INCL	6/21/67	4-AB2-	29	3/11/68			
4-B1 -485		4-AB2-	30	7/18/69			
THRU		4-AB2-	31	11/ 7/67			
4-B1 -488		4-AB2-	32	3/12/69			
INCL	9/ 2/69	4-AB2-	33	10/18/68			
4-B1 -489	6/21/67	4-AB2-	33.1	10/18/68			
4-B1 -490		4-AB2-	34	11/ 7/67			
THRU		4-AB2-	35	10/18/68			
4-B1 -493		4-AB2-	36	3/12/69			
INCL	9/ 2/69						
4-B1 -494	6/21/67						
4-B1 -495		4-AB3-	1	8/15/69			
THRU		4-A3 -	2.1	8/15/69			
4-B1 -502		4-A3 -	2.2	8/15/69			
INCL	9/ 2/69	4-A3 -	2.3	8/15/69			
4-B1 -503	6/21/67	4-A3 -	2.4	8/15/69			
4-B1 -504		4-B3 -	2.1	9/ 2/69			
THRU		4-B3 -	2.2	9/ 2/69			
4-B1 -507		4-B3 -	2.3	9/ 2/69			
INCL	9/ 2/69	4-B3 -	2.4	9/ 2/69			
4-B1 -508	6/21/67	4-AB3-	3	8/15/69			

LICENSED PROFESSIONAL ENGINEER — LESLIE E. ROBERTSON — NO. 34360 — STATE OF NEW YORK

SKILLING, HELLE, CHRISTIANSEN, ROBERTSON — Structural & Civil Engineers

PROJECT: THE WORLD TRADE CENTER | TITLE: EXTERIOR WALL - PANEL SCHEDULES AND DETAILS | DATE: 9/ 2/69

REVISIONS

4-B1 -363	12/ 5/67	4-AB2- 1	5/ 1/69	4-AB3- 4	8/15/69
4-B1 -364	6/21/67	4-AB2- 2	7/18/69	4-AB3- 5	VOID
4-B1 -365	5/14/69	4-AB2- 3	5/11/67	4-AB3- 5.1	8/15/69
4-B1 -366	12/ 5/67	4-AB2- 4	7/18/69	4-AB3- 5.2	8/15/69
4-B1 -367	5/14/69	4-AB2- 5	7/18/69	4-AB3- 6	8/15/69
4-B1 -368	12/ 5/67	4-AB2- 6	5/11/67	4-AB3- 7	HOLD
4-B1 -369	6/21/67	4-AB2- 7	11/ 7/67	4-AB3- 8	HOLD
4-B1 -370	5/14/69	4-AB2- 8	6/ 5/67	4-AB3- 9	8/15/69
4-B1 -371	12/ 5/67	4-AB2- 9	6/ 5/67	4-AB3- 10	8/15/69
4-B1 -372	5/14/69	4-AB2- 10	7/28/67		
4-B1 -373	12/ 5/67	4-AB2- 11	11/ 7/67		
4-B1 -374	6/21/67	4-AB2- 12	3/11/68		
4-B1 -375	6/21/67	4-AB2- 13	3/11/68		
4-B1 -376	5/14/69	4-AB2- 14	3/11/68		
4-B1 -377	6/21/67	4-AB2- 15	5/14/69		
4-B1 -378	5/14/69	4-AB2- 16	6/ 5/67		
4-B1 -379	6/21/67	4-AB2- 17	6/ 5/67		
4-B1 -380	6/21/67	4-AB2- 18	11/ 7/67		
4-B1 -381	5/14/69	4-AB2- 19	7/18/69		
4-B1 -382	6/21/67	4-AB2- 19.1	8/15/69		
4-B1 -383	5/14/69	4-AB2- 20	VOID		
4-B1 384	6/21/67	4-AB2- 21	7/28/67		
4-B1 385	6/21/67	4-AB2- 22	6/ 5/67		
4-B1 386	5/14/69	4-AB2- 23	11/ 7/67		
4-B1 387	6/21/67	4-AB2- 24	7/28/67		
4-B1 388	5/14/69	4-AB2- 25	6/ 5/67		
4-B1 -389		4-AB2- 26	6/ 5/67		
THRU		4-AB2- 27	7/18/69		
4-B1 -484		4-AB2- 28	6/ 5/67		
INCL	6/21/67	4-AB2- 29	3/11/68		
4-B1 -485		4-AB2- 30	7/18/69		
THRU		4-AB2- 31	11/ 7/67		
4-B1 -488		4-AB2- 32	3/12/69		
INCL	9/ 2/69	4-AB2- 33	10/18/68		
4-B1 -489	6/21/67	4-AB2- 33.1	10/18/68		
4-B1 -490		4-AB2- 34	11/ 7/67		
THRU		4-AB2- 35	10/18/68		
4-B1 -493		4-AB2- 36	3/12/69		
INCL	9/ 2/69				
4-B1 -494	6/21/67				
4-B1 -495		4-AB3- 1	8/15/69		
THRU		4-A3 - 2.1	8/15/69		
4-B1 -502		4-A3 - 2.2	8/15/69		
INCL	9/ 2/69	4-A3 - 2.3	8/15/69		
4-B1 -503	6/21/67	4-A3 - 2.4	8/15/69		
4-B1 -504		4-B3 - 2.1	9/ 2/69		
THRU		4-B3 - 2.2	9/ 2/69		
4-B1 -507		4-B3 - 2.3	9/ 2/69		
INCL	9/ 2/69	4-B3 - 2.4	9/ 2/69		
4-B1 -506	6/21/67	4-AB3- 3	8/15/69		

LICENSED PROFESSIONAL ENGINEER — LESLIE E. ROBERTSON — No. 34360 — UNIVERSITY OF THE STATE OF NEW YORK

SKILLING-HELLE-CHRISTIANSEN-ROBERTSON — Civil & Structural Engineers

PROJECT	TITLE	DATE
THE WORLD TRADE CENTER	EXTERIOR WALL - PANEL SCHEDULES AND DETAILS	7/ 1/69

REVISIONS

4-B1 -376	5/14/69
4-B1 -377	6/21/67
4-B1 -378	5/14/69
4-B1 -379	6/21/67
4-B1 -380	6/21/67
4-B1 -381	5/14/69
4-B1 -382	6/21/67
4-B1 -383	5/14/69
4-B1 384	6/21/67
4-B1 385	6/21/67
4-B1 386	5/14/69
4-B1 387	6/21/67
4-B1 388	5/14/69
4-B1 -389	
THRU	
4-B1 -508	
INCL	6/21/67

4-AB2- 1	5/ 1/69
4-AB2- 2	6/ 5/67
4-AB2- 3	5/11/67
4-AB2- 4	5/11/67
4-AB2- 5	5/11/67
4-AB2- 6	5/11/67
4-AB2- 7	11/ 7/67
4-AB2- 8	6/ 5/67
4-AB2- 9	6/ 5/67
4-AB2- 10	7/28/67
4-AB2- 11	11/ 7/67
4-AB2- 12	3/11/68
4-AB2- 13	3/11/68
4-AB2- 14	3/11/68
4-AB2- 15	5/14/69
4-AB2- 16	6/ 5/67
4-AB2- 17	6/ 5/67
4-AB2- 18	11- 7-67
4-AB2- 19	6- 5-67
4-AB2- 20	6- 5-67
4-AB2- 21	7-28-67
4-AB2- 22	6- 5-67
4-AB2- 23	11- 7-67
4-AB2- 24	7-28-67
4-AB2- 25	6- 5-67
4-AB2- 26	6- 5-67
4-AB2- 27	6- 5-67
4-AB2- 28	6- 5-67
4-AB2- 29	3/11/68
4-AB2- 30	6- 5-67
4-AB2- 31	11/ 7/67
4-AB2- 32	3/12/69
4-AB2- 33	10/18/68
4-AB2-33.1	10/18/68
4-AB2- 34	11- 7-67
4-AB2- 35	10/18/68
4-AB2- 36	3/12/69

4-AB3- 1	5/ 1/69
4-A3 - 2	4-12-67
4-A3 - 3	4-12-67
4-B3 - 2	4-12-67
4-B3 - 3	4-12-67
4-AB3- 4	6- 5-67
4-AB3- 5	4-12-67
4-AB3- 6	4-12-67
4-AB3- 7	4-12-67
4-AB3- 8	4-12-67
4-AB3- 9	4-12-67
4-AB3- 10	4-12-67

LICENSED PROFESSIONAL ENGINEER
LESLIE E. ROBERTSON
No. 34360
UNIVERSITY OF THE STATE OF NEW YORK

SKILLING, HELLE, CHRISTIANSEN, ROBERTSON — Structural & Civil Engineers

PROJECT: THE WORLD TRADE CENTER | TITLE: EXTERIOR WALL - PANEL SCHEDULES AND DETAILS | DATE: 4/ 1/69

REVISIONS

Revised 5-1-69

4-AB2-	4	5/11/67
4-AB2-	5	5/11/67
4-AB2-	6	5/11/67
4-AB2-	7	11/ 7/67
4-AB2-	8	6/ 5/67
4-AB2-	9	6/ 5/67
4-AB2-	10	7/28/67
4-AB2-	11	11/ 7/67
4-AB2-	12	3/11/68
4-AB2-	13	3/11/68
4-AB2-	14	3/11/68
4-AB2-	15	3/11/68
4-AB2-	16	6/ 5/67
4-AB2-	17	6/ 5/67
4-AB2-	18	11- 7-67
4-AB2-	19	6- 5-67
4-AB2-	20	6- 5-67
4-AB2-	21	7-28-67
4-AB2-	22	6- 5-67
4-AB2-	23	11- 7-67
4-AB2-	24	7-28-67
4-AB2-	25	6- 5-67
4-AB2-	26	6- 5-67
4-AB2-	27	6- 5-67
4-AB2-	28	6- 5-67
4-AB2-	29	3/11/68
4-AB2-	30	6- 5-67
4-AB2-	31	11/ 7/67
4-AB2-	32	3/12/69
4-AB2-	33	10/18/68
4-AB2-	33.1	10/18/68
4-AB2-	34	11- 7-67
4-AB2-	35	10/18/68
4-AB2-	36	3/12/69

In

4-AB3-	1	4/ 1/69
4-A3 -	2	4-12-67
4-A3 -	3	4-12-67
4-B3 -	2	4-12-67
4-B3 -	3	4-12-67
4-AB3-	4	6- 5-67
4-AB3-	5	4-12-67
4-AB3-	6	4-12-67
4-AB3-	7	4-12-67
4-AB3-	8	4-12-67
4-AB3-	9	4-12-67
4-AB3-	10	4-12-67

LICENSED: PAUL LESICKI — LESLIE E. ROBERTSON — NO. 34360 — UNIVERSITY OF THE STATE OF NEW YORK

SKILLING, HELLE, CHRISTIANSEN, ROBERTSON — Structural & Civil Engineers

PROJECT	THE WORLD TRADE CENTER	TITLE	EXTERIOR WALL - PANEL SCHEDULES AND DETAILS	DATE	4/ 1/69

REVISIONS

4-AB2- 4	5/11/67
4-AB2- 5	5/11/67
4-AB2- 6	5/11/67
4-AB2- 7	11/ 7/67
4-AB2- 8	6/ 5/67
4-AB2- 9	6/ 5/67
4-AB2- 10	7/28/67
4-AB2- 11	11/ 7/67
4-AB2- 12	3/11/68
4-AB2- 13	3/11/68
4-AB2- 14	3/11/68
4-AB2- 15	3/11/68
4-AB2- 16	6/ 5/67
4-AB2- 17	6/ 5/67
4-AB2- 18	11- 7-67
4-AB2- 19	6- 5-67
4-AB2- 20	6- 5-67
4-AB2- 21	7-28-67
4-AB2- 22	6- 5-67
4-AB2- 23	11- 7-67
4-AB2- 24	7-28-67
4-AB2- 25	6- 5-67
4-AB2- 26	6- 5-67
4-AB2- 27	6- 5-67
4-AB2- 28	6- 5-67
4-AB2- 29	3/11/68
4-AB2- 30	6- 5-67
4-AB2- 31	11/ 7/67
4-AB2- 32	3/12/69
4-AB2- 33	10/18/68
4-AB2-33.1	10/18/68
4-AB2- 34	11- 7-67
4-AB2- 35	10/18/68
4-AB2- 36	3/12/69
4-AB3- 1	4/ 1/69
4-A3 - 2	4-12-67
4-A3 - 3	4-12-67
4-B3 - 2	4-12-67
4-B3 - 3	4-12-67
4-AB3- 4	6- 5-67
4-AB3- 5	4-12-67
4-AB3- 6	4-12-67
4-AB3- 7	4-12-67
4-AB3- 8	4-12-67
4-AB3- 9	4-12-67
4-AB3- 10	4-12-67

LICENSED PROFESSIONAL ENGINEER — LESLIE E. ROBERTSON — No. 5436 — UNIVERSITY OF THE STATE OF NEW YORK

SKILLING, HELLE, CHRISTIANSEN, ROBERTSON — Structural & Civil Engineers

PROJECT	TITLE	DATE
THE WORLD TRADE CENTER	EXTERIOR WALL - PANEL SCHEDULES AND DETAILS	3/ 3/69

REVISIONS

4-AB2- 18	11- 7-67
4-AB2- 19	6- 5-67
4-AB2- 20	6- 5-67
4-AB2- 21	7-28-67
4-AB2- 22	6- 5-67
4-AB2- 23	11- 7-67
4-AB2- 24	7-28-67
4-AB2- 25	6- 5-67
4-AB2- 26	6- 5-67
4-AB2- 27	6- 5-67
4-AB2- 28	6- 5-67
4-AB2- 29	3/11/68
4-AB2- 30	6- 5-67
4-AB2- 31	11/ 7/67
4-AB2- 32	10/18/68
4-AB2- 33	10/18/68
4-AB2-33.1	10/18/68
4-AB2- 34	11- 7-67
4-AB2- 35	10/18/68
4-AB2- 36	10/19/68

4-AB3- 1	3/ 3/69
4-A3 - 2	4-12-67
4-A3 - 3	4-12-67
4-B3 - 2	4-12-67
4-B3 - 3	4-12-67
4-AB3- 4	6- 5-67
4-AB3- 5	4-12-67
4-AB3- 6	4-12-67
4-AB3- 7	4-12-67
4-AB3- 8	4-12-67
4-AB3- 9	4-12-67
4-AB3- 10	4-12-67

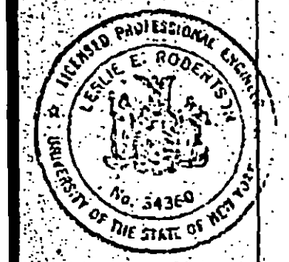

SKILLING, HELLE, CHRISTIANSEN, ROBERTSON — Structural & Civil Engineers

PROJECT	TITLE	DATE
THE WORLD TRADE CENTER	EXTERIOR WALL - PANEL SCHEDULES AND DETAILS	2/ 3/69

REVISIONS

4-AB2- 18	11- 7-67
4-AB2- 19	6- 5-67
4-AB2- 20	6- 5-67
4-AB2- 21	7-28-67
4-AB2- 22	6- 5-67
4-AB2- 23	11- 7-67
4-AB2- 24	7-28-67
4-AB2- 25	6- 5-67
4-AB2- 26	6- 5-67
4-AB2- 27	6- 5-67
4-AB2- 28	6- 5-67
4-AB2- 29	3/11/68
4-AB2- 30	6- 5-67
4-AB2- 31	11/ 7/67
4-AB2- 32	10/18/68
4-AB2- 33	10/18/68
4-AB2-33.1	10/18/68
4-AB2- 34	11- 7-67
4-AB2- 35	10/18/68
4-AB2- 36	10/18/68

4-AB3- 1	2/ 3/69
4-A3 - 2	4-12-67
4-A3 - 3	4-12-67
4-B3 - 2	4-12-67
4-B3 - 3	4-12-67
4-AB3- 4	6- 5-67
4-AB3- 5	4-12-67
4-AB3- 6	4-12-67
4-AB3- 7	4-12-67
4-AB3- 8	4-12-67
4-AB3- 9	4-12-67
4-AB3- 10	4-12-67

REGISTERED PROFESSIONAL ENGINEER
LESLIE E. ROBERTSON
No. 31360
UNIVERSITY OF THE STATE OF NEW YORK

SKILLING, HELLE, CHRISTIANSEN, ROBERTSON — Structural & Civil Engineers

PROJECT	TITLE	DATE
THE WORLD TRADE CENTER	EXTERIOR WALL - PANEL SCHEDULES AND DETAILS	1/ 3/69

REVISIONS

4-AB2- 18	11- 7-67
4-AB2- 19	6- 5-67
4-AB2- 20	6- 5-67
4-AB2- 21	7-28-67
4-AB2- 22	6- 5-67
4-AB2- 23	11- 7-67
4-AB2- 24	7-28-67
4-AB2- 25	6- 5-67
4-AB2- 26	6- 5-67
4-AB2- 27	6- 5-67
4-AB2- 28	6- 5-67
4-AB2- 29	3/11/68
4-AB2- 30	6- 5-67
4-AB2- 31	11/ 7/67
4-AB2- 32	10/18/68
4-AB2- 33	10/18/68
4-AB2-33.1	10/18/68
4-AB2- 34	11- 7-67
4-AB2- 35	10/18/68
4-AB2- 36	10/18/68

4-AB3- 1	1/ 3/69
4-A3 - 2	4-12-67
4-A3 - 3	4-12-67
4-B3 - 2	4-12-67
4-B3 - 3	4-12-67
4-AB3- 4	6- 5-67
4-AB3- 5	4-12-67
4-AB3- 6	4-12-67
4-AB3- 7	4-12-67
4-AB3- 8	4-12-67
4-AB3- 9	4-12-67
4-AB3- 10	4-12-67

LICENSED PROFESSIONAL ENGINEER
LESLIE E. ROBERTSON
No. 34360
UNIVERSITY OF THE STATE OF NEW YORK

SKILLING-HELLE-CHRISTIANSEN-ROBERTSON — Civil & Structural Engineers

PROJECT: THE WORLD TRADE CENTER | TITLE: EXTERIOR WALL - PANEL SCHEDULES AND DETAILS | DATE: 3/11/68

REVISIONS
6/3/68

4-AB2-	22	6- 5-67
4-AB2-	23	11- 7-67
4-AB2-	24	7-28-67
4-AB2-	25	6- 5-67
4-AB2-	26	6- 5-67
4-AB2-	27	6- 5-67
4-AB2-	28	6- 5-67
4-AB2-	29	3-11-68
4-AB2-	30	6- 5-67
4-AB2-	31	11- 7-67
4-AB2-	32	11/30/67
4-AB2-	33	11- 7-67
4-AB2-	33.1	11/ 7/67
4-AB2-	34	11- 7-67
4-AB2-	35	3-11-68
4-AB2-	36	11- 7-67
4-AB3-	1	11- 7-67
4-A3-	2	4-12-67
4-A3-	3	4-12-67
4-B3-	2	4-12-67
4-B3-	3	4-12-67
4-AB3-	4	6- 5-67
4-AB3-	5	4-12-67
4-AB3-	6	4-12-67
4-AB3-	7	4-12-67
4-AB3-	8	4-12-67
4-AB3-	9	4-12-67
4-AB3-	10	4-12-67

LICENSED PROFESSIONAL ENGINEER
LESLIE E. ROBERTSON
No. 34360
UNIVERSITY OF THE STATE OF NEW YORK

WORTHINGTON, SKILLING, HELLE & JACKSON — Civil & Structural Engineers

PROJECT: THE WORLD TRADE CENTER | TITLE: DRAWING BOOK 4 GENERAL NOTES | DATE: 6-5-67

REVISIONS
12-5-67
6-3-68
1-3-69
2-3-69
3-3-69
4-1-69
Printed 5-1-69

PANEL NUMBER			PANEL TYPE	COLUMN 1 TYPE	COL 1 FY1	COL 1 FY2	COL 1 CSU	COL 1 CSL	COLUMN 2 TYPE	COL 2 FY1	COL 2 FY2	COL 2 CSU	COL 2 CSL	COLUMN 3 TYPE	COL 3 FY1	COL 3 FY2	COL 3 CSU	COL 3 CSL
(1)	(2)	(3)	(4)	(5)	(6)	(7)	(8)	(9)	(5)	(6)	(7)	(8)	(9)	(5)	(6)	(7)	(8)	(9)

PANEL NUMBER			FLOOR	SPANDREL PLATE T4	SPANDREL PLATE FY4	SPANDREL PLATE SCL	SPANDREL PLATE SCR	WELDMENTS NO 5	WELDMENTS NO 6	WELDMENTS NO 7	SEAT DETAIL COL 1	SEAT DETAIL COL 2	SEAT DETAIL COL 3
(1)	(2)	(3)	(10)	(11)	(12)	(13)	(14)	(15)	(16)	(17)	(18)	(19)	(19)	(19)

NOTES

(1) COLUMN NUMBER FOR CENTER COLUMN OF PANEL
(2) NUMBER OF STORY CONTAINING UPPER SPLICE
(3) NUMBER OF STORY CONTAINING LOWER SPLICE
(4) PANEL TYPE — 2 TO 7
(5) COLUMN TYPE — 8 TO 10
(6) REQUIRED YIELD STRENGTH FOR PLATE NO.1 (KSI)
(7) REQUIRED YIELD STRENGTH FOR PLATES NO.2 AND NO.3 (KSI)
(8) COLUMN SPLICE UPPER (DETAIL NUMBER) — 12 TO 16
(9) COLUMN SPLICE LOWER (DETAIL NUMBER) — 12 TO 16
(10) FLOOR LEVEL OF SPANDREL
(11) THICKNESS OF SPANDREL PLATE NO.4 (INCHES)
(12) REQUIRED YIELD STRENGTH FOR PLATE NO.4 (KSI)
(13) SPANDREL CONNECTION LEFT (DETAIL NUMBER) — 26 TO 30
(14) SPANDREL CONNECTION RIGHT (DETAIL NUMBER) — 26 TO 30
(15) SIZE OF WELD NO. 5 — 11,18 TO 24
(16) LENGTH OF WELD NO. 5 — 11,18 TO 24
(17) SIZE OF WELD NO. 6 — 11,18 TO 24
(18) SIZE OF WELD NO. 7 — 11,18 TO 24
(19) SEAT DETAIL NUMBER — 31 TO 36
(20) PANELS ARE VIEWED FROM INSIDE OF BUILDING LOOKING OUT

REF DWGS 4-AB2-

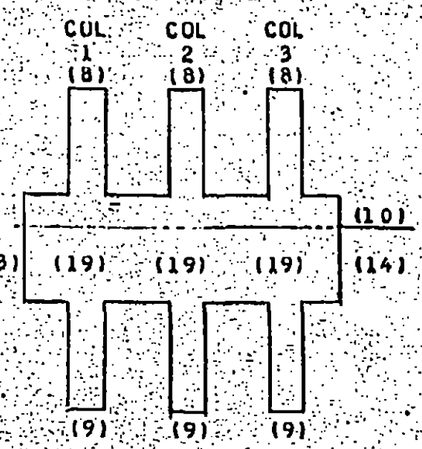

Rev. No 1. 7-10-67
No 2. 12-5-67

LESLIE E. ROBERTSON — LICENSED PROFESSIONAL ENGINEER — No. 34360 — STATE OF NEW YORK

WORTHINGTON, SKILLING, HELLE & JACKSON — Civil & Structural Engineers

PROJECT: THE WORLD TRADE CENTER | TITLE: DRAWING BOOK 4 GENERAL NOTES | DATE: 6-5-67

REVISIONS
12-5-67
6-3-68
1-3-69
2-3-69
3-3-69
4-1-69

PANEL NUMBER (1) (2) (3)	PANEL TYPE (4)	COLUMN 1 TYPE (5)	COLUMN 1 FY1 (6)	COLUMN 1 FY2 (7)	COLUMN 1 CSU (8)	COLUMN 1 CSL (9)	COLUMN 2 TYPE (5)	COLUMN 2 FY1 (6)	COLUMN 2 FY2 (7)	COLUMN 2 CSU (8)	COLUMN 2 CSL (9)	COLUMN 3 TYPE (5)	COLUMN 3 FY1 (6)	COLUMN 3 FY2 (7)	COLUMN 3 CSU (8)	COLUMN 3 CSL (9)

PANEL NUMBER (1) (2) (3)	FLOOR (10)	SPANDREL PLATE T4 (11)	SPANDREL PLATE FY4 (12)	SPANDREL PLATE SCL (13)	SPANDREL PLATE SCR (14)	WELDMENTS NO 5 (15) (16)	WELDMENTS NO 6 (17)	WELDMENTS NO 7 (18)	SEAT DETAIL COL 1 (19)	SEAT DETAIL COL 2 (19)	SEAT DETAIL COL 3 (19)

NOTES — REF DWGS 4-AB2-

(1) COLUMN NUMBER FOR CENTER COLUMN OF PANEL
(2) NUMBER OF STORY CONTAINING UPPER SPLICE
(3) NUMBER OF STORY CONTAINING LOWER SPLICE
(4) PANEL TYPE — 2 TO 7
(5) COLUMN TYPE — 8 TO 10
(6) REQUIRED YIELD STRENGTH FOR PLATE NO.1 (KSI)
(7) REQUIRED YIELD STRENGTH FOR PLATES NO.2 AND NO.3 (KSI)
(8) COLUMN SPLICE UPPER (DETAIL NUMBER) — 12 TO 16
(9) COLUMN SPLICE LOWER (DETAIL NUMBER) — 12 TO 16
(10) FLOOR LEVEL OF SPANDREL
(11) THICKNESS OF SPANDREL PLATE NO.4 (INCHES)
(12) REQUIRED YIELD STRENGTH FOR PLATE NO.4 (KSI)
(13) SPANDREL CONNECTION LEFT (DETAIL NUMBER) — 26 TO 30
(14) SPANDREL CONNECTION RIGHT (DETAIL NUMBER) — 26 TO 30
(15) SIZE OF WELD NO. 5 — 11,18 TO 24
(16) LENGTH OF WELD NO. 5 — 11,18 TO 24
(17) SIZE OF WELD NO. 6 — 11,18 TO 24
(18) SIZE OF WELD NO. 7 — 11,18 TO 24
(19) SEAT DETAIL NUMBER — 31 TO 36
(20) PANELS ARE VIEWED FROM INSIDE OF BUILDING LOOKING OUT

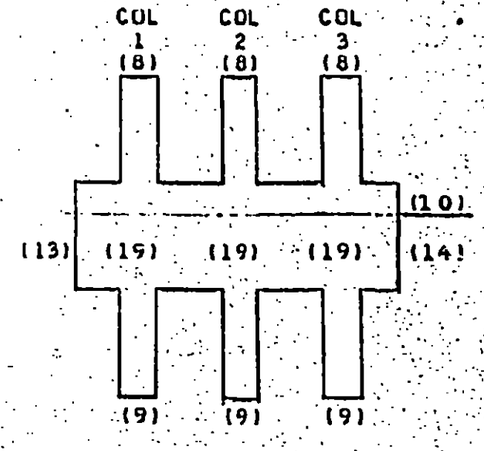

Rev. No 1. 7-10-67
No 2. 12-5-67

LICENSED PROFESSIONAL ENGINEER LESLIE E. ROBERTSON No. 34360 STATE OF NEW YORK

WORTHINGTON, SKILLING, HELLE & JACKSON — Civil & Structural Engineers

PROJECT	TITLE	DATE
THE WORLD TRADE CENTER	DRAWING BOOK 4 GENERAL NOTES	6-5-67

REVISIONS
12-5-67
6-3-68
1-3-69
2-3-69
3-3-69

PANEL NUMBER (1) (2) (3)	PANEL TYPE (4)	COLUMN 1 TYPE (5)	COLUMN 1 FY1 (6)	COLUMN 1 FY2 (7)	COLUMN 1 CSU (8)	COLUMN 1 CSL (9)	COLUMN 2 TYPE (5)	COLUMN 2 FY1 (6)	COLUMN 2 FY2 (7)	COLUMN 2 CSU (8)	COLUMN 2 CSL (9)	COLUMN 3 TYPE (5)	COLUMN 3 FY1 (6)	COLUMN 3 FY2 (7)	COLUMN 3 CSU (8)	COLUMN 3 CSL (9)

PANEL NUMBER (1) (2) (3)	FLOOR (10)	SPANDREL PLATE T4 (11)	SPANDREL PLATE FY4 (12)	SPANDREL PLATE SCL (13)	SPANDREL PLATE SCR (14)	WELDMENTS NO 5 (15) (16)	WELDMENTS NO 6 (17)	WELDMENTS NO 7 (18)	SEAT DETAIL COL 1 (19)	SEAT DETAIL COL 2 (19)	SEAT DETAIL COL 3 (19)

1

NOTES

	REF DWGS 4-AB2-
(1) COLUMN NUMBER FOR CENTER COLUMN OF PANEL	
(2) NUMBER OF STORY CONTAINING UPPER SPLICE	
(3) NUMBER OF STORY CONTAINING LOWER SPLICE	
(4) PANEL TYPE	2 TO 7
(5) COLUMN TYPE	8 TO 10
(6) REQUIRED YIELD STRENGTH FOR PLATE NO.1(KSI)	
(7) REQUIRED YIELD STRENGTH FOR PLATES NO.2 AND NO.3 (KSI)	
(8) COLUMN SPLICE UPPER (DETAIL NUMBER)	12 TO 16
(9) COLUMN SPLICE LOWER (DETAIL NUMBER)	12 TO 16
(10) FLOOR LEVEL OF SPANDREL	
(11) THICKNESS OF SPANDREL PLATE NO.4 (INCHES)	
(12) REQUIRED YIELD STRENGTH FOR PLATE NO.4(KSI)	
(13) SPANDREL CONNECTION LEFT (DETAIL NUMBER)	26 TO 30
(14) SPANDREL CONNECTION RIGHT (DETAIL NUMBER)	26 TO 30
(15) SIZE OF WELD NO. 5	11,18 TO 24
(16) LENGTH OF WELD NO. 5	11,18 TO 24
(17) SIZE OF WELD NO. 6	11,18 TO 24
(18) SIZE OF WELD NO. 7	11,18 TO 24
(19) SEAT DETAIL NUMBER	31 TO 36
(20) PANELS ARE VIEWED FROM INSIDE OF BUILDING LOOKING OUT	

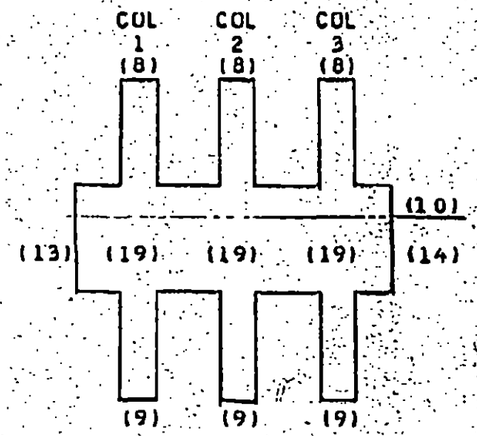

Rev. No 1. 7-10-67
No 2. 12-5-67

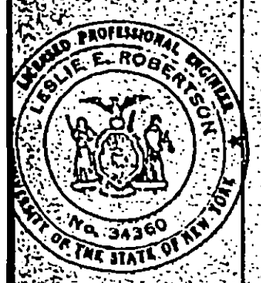

WORTHINGTON, SKILLING, HELLE & JACKSON — Civil & Structural Engineers

PROJECT: THE WORLD TRADE CENTER | TITLE: DRAWING BOOK 4 GENERAL NOTES | DATE: 6- 5-67

REVISIONS
12-5-67
6-3-68
1-3-69
2-3-69

PANEL NUMBER			PANEL TYPE	COLUMN 1 TYPE	COLUMN 1 FY1	COLUMN 1 FY2	COLUMN 1 CSU	COLUMN 1 CSL	COLUMN 2 TYPE	COLUMN 2 FY1	COLUMN 2 FY2	COLUMN 2 CSU	COLUMN 2 CSL	COLUMN 3 TYPE	COLUMN 3 FY1	COLUMN 3 FY2	COLUMN 3 CSU	COLUMN 3 CSL
(1)	(2)	(3)	(4)	(5)	(6)	(7)	(8)	(9)	(5)	(6)	(7)	(8)	(9)	(5)	(6)	(7)	(8)	(9)

PANEL NUMBER			FLOOR	SPANDREL PLATE T4	SPANDREL PLATE FY4	SPANDREL PLATE SCL	SPANDREL PLATE SCR	WELDMENTS NO 5	WELDMENTS NO 6	WELDMENTS NO 7	SEAT DETAIL COL 1	SEAT DETAIL COL 2	SEAT DETAIL COL 3
(1)	(2)	(3)	(10)	(11)	(12)	(13)	(14)	(15)	(16)	(17)	(18)	(19)	(19)	(19)

NOTES

	REF DWGS 4-AB2-
(1) COLUMN NUMBER FOR CENTER COLUMN OF PANEL	
(2) NUMBER OF STORY CONTAINING UPPER SPLICE	
(3) NUMBER OF STORY CONTAINING LOWER SPLICE	
(4) PANEL TYPE	2 TO 7
(5) COLUMN TYPE	8 TO 10
(6) REQUIRED YIELD STRENGTH FOR PLATE NO.1 (KSI)	
(7) REQUIRED YIELD STRENGTH FOR PLATES NO.2 AND NO.3 (KSI)	
(8) COLUMN SPLICE UPPER (DETAIL NUMBER)	12 TO 16
(9) COLUMN SPLICE LOWER (DETAIL NUMBER)	12 TO 16
(10) FLOOR LEVEL OF SPANDREL	
(11) THICKNESS OF SPANDREL PLATE NO.4 (INCHES)	
(12) REQUIRED YIELD STRENGTH FOR PLATE NO.4 (KSI)	
(13) SPANDREL CONNECTION LEFT (DETAIL NUMBER)	26 TO 30
(14) SPANDREL CONNECTION RIGHT (DETAIL NUMBER)	26 TO 30
(15) SIZE OF WELD NO. 5	11,18 TO 24
(16) LENGTH OF WELD NO. 5	11,18 TO 24
(17) SIZE OF WELD NO. 6	11,18 TO 24
(18) SIZE OF WELD NO. 7	11,18 TO 24
(19) SEAT DETAIL NUMBER	31 TO 36
(20) PANELS ARE VIEWED FROM INSIDE OF BUILDING LOOKING OUT.	

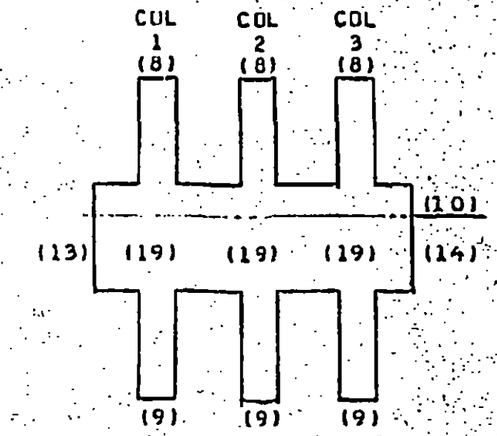

Rev. No 1. 7-10-67
No 2. 12-5-67

LICENSED PROFESSIONAL ENGINEER LESLIE E. ROBERTSON No. 34360 UNIVERSITY OF THE STATE OF NEW YORK

WORTHINGTON, SKILLING, HELLE & JACKSON — Civil & Structural Engineers

PROJECT: THE WORLD TRADE CENTER | TITLE: DRAWING BOOK 4 GENERAL NOTES | DATE: 6-5-67

REVISIONS
12-5-67
6-3-68
1-3-69

PANEL NUMBER (1)	(2)	(3)	PANEL TYPE (4)	COLUMN 1 TYPE (5)	FY1 (6)	FY2 (7)	CSU (8)	CSL (9)	COLUMN 2 TYPE (5)	FY1 (6)	FY2 (7)	CSU (8)	CSL (9)	COLUMN 3 TYPE (5)	FY1 (6)	FY2 (7)	CSU (8)	CSL (9)

PANEL NUMBER (1)	(2)	(3)	FLOOR (10)	SPANDREL PLATE T4 (11)	FY4 (12)	SCL (13)	SCR (14)	WELDMENTS NO 5 (15)	(16)	NO 6 (17)	NO 7 (18)	SEAT DETAIL COL 1 (19)	COL 2 (19)	COL 3 (19)

NOTES

(1) COLUMN NUMBER FOR CENTER COLUMN OF PANEL
(2) NUMBER OF STORY CONTAINING UPPER SPLICE
(3) NUMBER OF STORY CONTAINING LOWER SPLICE
(4) PANEL TYPE — REF DWGS 4-AB2- 2 TO 7
(5) COLUMN TYPE — 8 TO 10
(6) REQUIRED YIELD STRENGTH FOR PLATE NO.1 (KSI)
(7) REQUIRED YIELD STRENGTH FOR PLATES NO.2 AND NO.3 (KSI)
(8) COLUMN SPLICE UPPER (DETAIL NUMBER) — 12 TO 16
(9) COLUMN SPLICE LOWER (DETAIL NUMBER) — 12 TO 16
(10) FLOOR LEVEL OF SPANDREL
(11) THICKNESS OF SPANDREL PLATE NO.4 (INCHES)
(12) REQUIRED YIELD STRENGTH FOR PLATE NO.4 (KSI)
(13) SPANDREL CONNECTION LEFT (DETAIL NUMBER) — 26 TO 30
(14) SPANDREL CONNECTION RIGHT (DETAIL NUMBER) — 26 TO 30
(15) SIZE OF WELD NO. 5 — 11,18 TO 24
(16) LENGTH OF WELD NO. 5 — 11,18 TO 24
(17) SIZE OF WELD NO. 6 — 11,18 TO 24
(18) SIZE OF WELD NO. 7 — 11,18 TO 24
(19) SEAT DETAIL NUMBER — 31 TO 36
(20) PANELS ARE VIEWED FROM INSIDE OF BUILDING LOOKING OUT

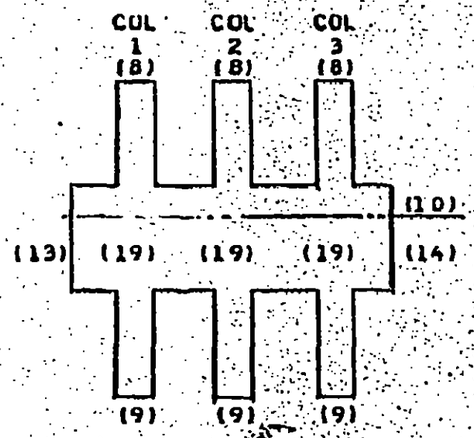

Rev. No 1. 7-10-67
No 2. 12-5-67

WORTHINGTON, SKILLING, HELLE & JACKSON — Civil & Structural Engineers

PROJECT: THE WORLD TRADE CENTER | TITLE: DRAWING BOOK 4 GENERAL NOTES | DATE: 6-5-67

REVISIONS:
12-5-67
6-3-68

		COLUMN 1					COLUMN 2					COLUMN 3				
PANEL NUMBER	PANEL TYPE	TYPE	FY1	FY2	CSU	CSL	TYPE	FY1	FY2	CSU	CSL	TYPE	FY1	FY2	CSU	CSL
(1) (2) (3)	(4)	(5)	(6)	(7)	(8)	(9)	(5)	(6)	(7)	(8)	(9)	(5)	(6)	(7)	(8)	(9)

		SPANDREL PLATE				WELDMENTS			SEAT DETAIL		
PANEL NUMBER	FLOOR	T4	FY4	SCL	SCR	NO 5	NO 6	NO 7	COL 1	COL 2	COL 3
(1) (2) (3)	(10)	(11)	(12)	(13)	(14)	(15) (16)	(17)	(18)	(19)	(19)	(19)

NOTES

	REF DWGS 4-AB2-
(1) COLUMN NUMBER FOR CENTER COLUMN OF PANEL	
(2) NUMBER OF STORY CONTAINING UPPER SPLICE	
(3) NUMBER OF STORY CONTAINING LOWER SPLICE	
(4) PANEL TYPE	2 TO 7
(5) COLUMN TYPE	8 TO 10
(6) REQUIRED YIELD STRENGTH FOR PLATE NO.1(KSI)	
(7) REQUIRED YIELD STRENGTH FOR PLATES NO.2 AND NO.3 (KSI)	
(8) COLUMN SPLICE UPPER (DETAIL NUMBER)	12 TO 16
(9) COLUMN SPLICE LOWER (DETAIL NUMBER)	12 TO 16
(10) FLOOR LEVEL OF SPANDREL	
(11) THICKNESS OF SPANDREL PLATE NO.4 (INCHES)	
(12) REQUIRED YIELD STRENGTH FOR PLATE NO.4(KSI)	
(13) SPANDREL CONNECTION LEFT (DETAIL NUMBER)	26 TO 30
(14) SPANDREL CONNECTION RIGHT (DETAIL NUMBER)	26 TO 30
(15) SIZE OF WELD NO. 5	11;18 TO 24
(16) LENGTH OF WELD NO. 5	11;18 TO 24
(17) SIZE OF WELD NO. 6	11;18 TO 24
(18) SIZE OF WELD NO. 7	11;18 TO 24
(19) SEAT DETAIL NUMBER	31 TO 36
(20) PANELS ARE VIEWED FROM INSIDE OF BUILDING LOOKING OUT	

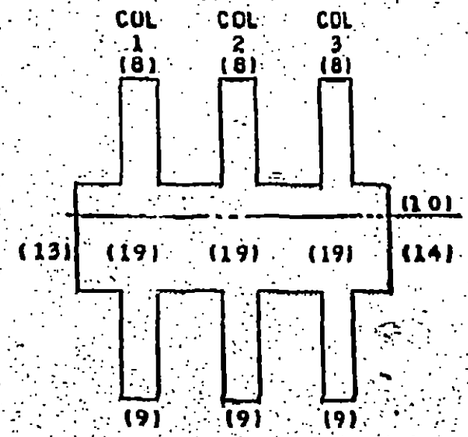

Rev. No 1. 7-10-67
No 2. 12-5-67

WORTHINGTON, SKILLING, HELLE & JACKSON — Civil & Structural Engineers

PROJECT THE WORLD TRADE CENTER | TITLE EXTERIOR WALL - DETAILS - INDEX | DATE 6-5-67

REVISIONS
7-10-67
6-3-68
1-3-69
2-3-69
3-3-69
4-1-69
Printed 5-1-69

4-AB2-1 Index
4-AB2-2 Panel types 100-150
4-AB2-3 Panel types 200-216
4-AB2-4 Panel types 220-240
4-AB2-5 Panel types 300-320
4-AB2-6 Panel types 400-421
4-AB2-7 Panel dimension schedule
4-AB2-8 Column type 100
4-AB2-9 Column type 300
4-AB2-10 Column type 400 & 500
4-AB2-11 Detail 1
4-AB2-12 Column splice 411-493 & 681-693
4-AB2-13 Column splice 101-113
4-AB2-14 Column splice 121-123
4-AB2-15 Column splice schedule
4-AB2-16 Column splice details
4-AB2-17 Welding Electrodes
4-AB2-18 Detail 2
4-AB2-19 Detail 3
4-AB2-20 Detail 3A
4-AB2-21 Detail 4&5
4-AB2-22 Detail 6
4-AB2-23 Detail 7
4-AB2-24 Detail 8
4-AB2-25 Weld #10
4-AB2-26 Spandrel connection details 101-135
4-AB2-27 Spandrel connection details 201-301
4-AB2-28 Spandrel connection details 401-416
4-AB2-29 Spandrel connection splice plate
4-AB2-30 Spandrel connection Schedule
4-AB2-31 Seat details 1013-3511
4-AB2-32 Seat details 4064-4524
4-AB2-33 Exterior wall seat details
4-AB2-34 Seat details 7010-7494
4-AB2-35 Seat detail schedule I
4-AB2-36 Seat detail schedule II
4-AB2-33.1 Exterior wall seat details

WORTHINGTON, SKILLING, HELLE & JACKSON — Civil & Structural Engineers

PROJECT: THE WORLD TRADE CENTER | TITLE: EXTERIOR WALL - DETAILS - INDEX | DATE: 6-5-67

REVISIONS

7-10-67
6-3-68
1-3-69
2-3-69
3-3-69
4-1-69

4-AB2-1 Index
4-AB2-2 Panel types 100-150
4-AB2-3 Panel types 200-216
4-AB2-4 Panel types 220-240
4-AB2-5 Panel types 300-320
4-AB2-6 Panel types 400-421
4-AB2-7 Panel dimension schedule
4-AB2-8 Column type 100
4-AB2-9 Column type 300
4-AB2-10 Column type 400 & 500
4-AB2-11 Detail 1
4-AB2-12 Column splice 411-493 & 681-693
4-AB2-13 Column splice 101-113
4-AB2-14 Column splice 121-123
4-AB2-15 Column splice schedule
4-AB2-16 Column splice details
4-AB2-17 Welding Electrodes
4-AB2-18 Detail 2
4-AB2-19 Detail 3
4-AB2-20 Detail 3A
4-AB2-21 Detail 4&5
4-AB2-22 Detail 6
4-AB2-23 Detail 7
4-AB2-24 Detail 8
4-AB2-25 Weld #10
4-AB2-26 Spandrel connection details 101-135
4-AB2-27 Spandrel connection details 201-301
4-AB2-28 Spandrel connection details 401-416
4-AB2-29 Spandrel connection splice plate
4-AB2-30 Spandrel connection Schedule
4-AB2-31 Seat details 1013-3511
4-AB2-32 Seat details 4064-4324
4-AB2-33 Exterior wall seat details
4-AB2-34 Seat details 7010-7494
4-AB2-35 Seat detail schedule I
4-AB2-36 Seat detail schedule II
4-AB2-33.1 Exterior wall seat details

WORTHINGTON, SKILLING, HELLE & JACKSON — Civil & Structural Engineers

PROJECT THE WORLD TRADE CENTER | TITLE EXTERIOR WALL - DETAILS - INDEX | DATE 6-5-67

REVISIONS

7-10-67
6-3-68
1-3-69
2-3-69
3-3-69

4-AB2-1 Index
4-AB2-2 Panel types 100-150
4-AB2-3 Panel types 200-216
4-AB2-4 Panel types 220-240
4-AB2-5 Panel types 300-320
4-AB2-6 Panel types 400-421
4-AB2-7 Panel dimension schedule
4-AB2-8 Column type 100
4-AB2-9 Column type 300
4-AB2-10 Column type 400 & 500
4-AB2-11 Detail 1
4-AB2-12 Column splice 411-493 & 681-693
4-AB2-13 Column splice 101-113
4-AB2-14 Column splice 121-123
4-AB2-15 Column splice schedule
4-AB2-16 Column splice details
4-AB2-17 Welding Electrodes
4-AB2-18 Detail 2
4-AB2-19 Detail 3
4-AB2-20 Detail 3A
4-AB2-21 Detail 4&5
4-AB2-22 Detail 6
4-AB2-23 Detail 7
4-AB2-24 Detail 8
4-AB2-25 Weld #10
4-AB2-26 Spandrel connection details 101-135
4-AB2-27 Spandrel connection details 201-301
4-AB2-28 Spandrel connection details 401-416
4-AB2-29 Spandrel connection splice plate
4-AB2-30 Spandrel connection Schedule
4-AB2-31 Seat details 1013-3511
4-AB2-32 Seat details 4064-4524
4-AB2-33 Exterior wall seat details
4-AB2-34 Seat details 7010-7494
4-AB2-35 Seat detail schedule I
4-AB2-36 Seat detail schedule II
4-AB2-33.1 Exterior wall seat details

WORTHINGTON, SKILLING, HELLE & JACKSON — Civil & Structural Engineers

PROJECT THE WORLD TRADE CENTER | TITLE EXTERIOR WALL - DETAILS - INDEX | DATE 6-5-67

REVISIONS

1-10-67
6.3.68
1-3-69
2-3-69

4-AB2-1 Index
4-AB2-2 Panel types 100-150
4-AB2-3 Panel types 200-216
4-AB2-4 Panel types 220-240
4-AB2-5 Panel types 300-320
4-AB2-6 Panel types 400-421
4-AB2-7 Panel dimension schedule
4-AB2-8 Column type 100
4-AB2-9 Column type 300
4-AB2-10 Column type 400 & 500
4-AB2-11 Detail 1
4-AB2-12 Column splice 411-493 & 681-693
4-AB2-13 Column splice 101-113
4-AB2-14 Column splice 121-123
4-AB2-15 Column splice schedule
4-AB2-16 Column splice details
4-AB2-17 Welding Electrodes
4-AB2-18 Detail 2
4-AB2-19 Detail 3
4-AB2-20 Detail 3A
4-AB2-21 Detail 4&5
4-AB2-22 Detail 6
4-AB2-23 Detail 7
4-AB2-24 Detail 8
4-AB2-25 Weld #10
4-AB2-26 Spandrel connection details 101-135
4-AB2-27 Spandrel connection details 201-301
4-AB2-28 Spandrel connection details 401-416
4-AB2-29 Spandrel connection splice plate
4-AB2-30 Spandrel connection Schedule
4-AB2-31 Seat details 1013-3511
4-AB2-32 Seat details 4064-4524
4-AB2-33 Exterior wall seat details
4-AB2-34 Seat details 7010-7494
4-AB2-35 Seat detail schedule I
4-AB2-36 Seat detail schedule II
4-AB2-33.1 Exterior wall seat details

WORTHINGTON, SKILLING, HELLE & JACKSON — Civil & Structural Engineers

PROJECT: THE WORLD TRADE CENTER | TITLE: EXTERIOR WALL - DETAILS - INDEX | DATE: 6-5-67

REVISIONS

7-10-67
6-3-68
1-3-69

4-AB2-1 Index
4-AB2-2 Panel types 100-150
4-AB2-3 Panel types 200-216
4-AB2-4 Panel types 220-240
4-AB2-5 Panel types 300-320
4-AB2-6 Panel types 400-421
4-AB2-7 Panel dimension schedule
4-AB2-8 Column type 100
4-AB2-9 Column type 300
4-AB2-10 Column type 400 & 500
4-AB2-11 Detail 1
4-AB2-12 Column splice 411-493 & 681-693
4-AB2-13 Column splice 101-113
4-AB2-14 Column splice 121-123
4-AB2-15 Column splice schedule
4-AB2-16 Column splice details
4-AB2-17 Welding Electrodes
4-AB2-18 Detail 2
4-AB2-19 Detail 3
4-AB2-20 Detail 3A
4-AB2-21 Detail 4&5
4-AB2-22 Detail 6
4-AB2-23 Detail 7
4-AB2-24 Detail 8
4-AB2-25 Weld #10
4-AB2-26 Spandrel connection details 101-135
4-AB2-27 Spandrel connection details 201-301
4-AB2-28 Spandrel connection details 401-416
4-AB2-29 Spandrel connection splice plate
4-AB2-30 Spandrel connection Schedule
4-AB2-31 Seat details 1013-3511
4-AB2-32 Seat details 4064-4524
4-AB2-33 Exterior wall seat details
4-AB2-34 Seat details 7010-7494
4-AB2-35 Seat detail schedule I
4-AB2-36 Seat detail schedule II
4-AB2-33.1 Exterior wall seat details

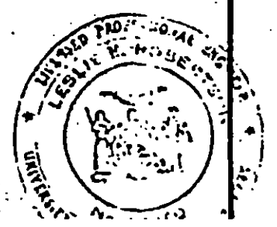

WORTHINGTON, SKILLING, HELLE & JACKSON — Civil & Structural Engineers

PROJECT: THE WORLD TRADE CENTER | TITLE: EXTERIOR WALL - DETAILS - INDEX | DATE: 6-5-67

REVISIONS

7-10-67
6-3-68

4-AB2-1 Index
4-AB2-2 Panel types 100-150
4-AB2-3 Panel types 200-216
4-AB2-4 Panel types 220-240
4-AB2-5 Panel types 300-320
4-AB2-6 Panel types 400-421
4-AB2-7 Panel dimension schedule
4-AB2-8 Column type 100
4-AB2-9 Column type 300
4-AB2-10 Column type 400 & 500
4-AB2-11 Detail 1
4-AB2-12 Column splice 411-493 & 681-693
4-AB2-13 Column splice 101-113
4-AB2-14 Column splice 121-123
4-AB2-15 Column splice schedule
4-AB2-16 Column splice details
4-AB2-17 Welding Electrodes
4-AB2-18 Detail 2
4-AB2-19 Detail 3
4-AB2-20 Detail 3A
4-AB2-21 Detail 4 & 5
4-AB2-22 Detail 6
4-AB2-23 Detail 7
4-AB2-24 Detail 8
4-AB2-25 Weld #10
4-AB2-26 Spandrel connection details 101-135
4-AB2-27 Spandrel connection details 201-301
4-AB2-28 Spandrel connection details 401-416
4-AB2-29 Spandrel connection splice plate
4-AB2-30 Spandrel connection Schedule
4-AB2-31 Seat details 1013-3511
4-AB2-32 Seat details 4067-4524
4-AB2-33 Exterior wall seat details
4-AB2-34 Seat details 7010-7494
4-AB2-35 Seat detail schedule I
4-AB2-36 Seat detail schedule II
4-AB2-33.1 Exterior wall seat details

LICENSED PROFESSIONAL ENGINEER — LESLIE E. ROBERTSON

WORTHINGTON, SKILLING, HELLE & JACKSON — Civil & Structural Engineers

PROJECT: THE WORLD TRADE CETER | TITLE: EXTERIOR WALL - 107 TO 110 - NOTES & INDEX | DATE: 4-12-67

REVISIONS
11-7-67
1-3-69
2-3-69
3-3-69
4-1-69
Printed 5-1-69

NOTES

1. See drawing SA-140, 141, 142 & 143 and SS-140, 141, 142 & 143 for wall elevations
2. All Wide Flange column material shall be ASTM A36
3. Structural steel tubing shall be seamless and shall conform to ASTM A501

INDEX:

4-AB3-1 NOTES & INDEX
4-A3-2 Column Schedule - Tower A
4-A3-3 Spandrel Schedule - Tower A
4-B3-2 Column Schedule - Tower B
4-B3-3 Spandrel Schedule - Tower B
4-AB3-4 Typical Elevation
4-AB3-5 Column Details
4-AB3-6 Spandrel Types
4-AB3-7 Connections Floor 108
4-AB3-8 Connections Floor 110
4-AB3-9 Corner Details
4-AB3-10 Tube Details

For latest date each page
See 4-AB0-0

LESLIE E. ROBERTSON

WORTHINGTON, SKILLING, HELLE & JACKSON — Civil & Structural Engineers

PROJECT: THE WORLD TRADE CETER | TITLE: EXTERIOR WALL -107 TO 110 - NOTES & INDEX | DATE: 4-12-67

REVISIONS
11-7-67
1-3-69
2-3-69
3-3-69
4-1-69

NOTES

1.- See drawing SA-140, 141, 142 & 143 and SB-140, 141, 142 & 143 for wall elevations
2.- All Wide Flange column material shall be ASTM A36
3.- Structural steel tubing shall be seamless and shall conform to ASTM A501

INDEX:

4-AB0-1 NOTES & INDEX
4-A3-2 Column Schedule - Tower A
4-A3-3 Spandrel Schedule - Tower A
4-B3-2 Column Schedule - Tower B
4-B3-3 Spandrel Schedule - Tower B
4-AB3-4 Typical Elevation
4-AB3-5 Column Details
4-AB3-6 Spandrel Types
4-AB3-7 Connections Floor 108
4-AB3-8 Connections Floor 110
4-AB3-9 Corner Details
4-AB3-10 Tube Details

For latest date each page see 4-AB0-0

LESLIE E. ROBERTSON — LICENSED PROFESSIONAL ENGINEER — No. 24096 — STATE OF NEW YORK

WORTHINGTON, SKILLING, HELLE & JACKSON — Civil & Structural Engineers

PROJECT: THE WORLD TRADE CETER | TITLE: EXTERIOR WALL -107 to 110 - NOTES & INDEX | DATE: 4-12-67

REVISIONS
1-7-67
1-3-69
2-3-69
3-3-69

NOTES

1.- See drawing SA-140, 141, 142 & 143 and SB-140, 141, 142 & 143 for wall elevations
2.- All Wide Flange column material shall be ASTM A36
3.- Structural steel tubing shall be seamless and shall conform to ASTM A501

INDEX:

4-AB3-1 NOTES & INDEX
4-A3-2 Column Schedule - Tower A
4-A3-3 Spandrel Schedule - Tower A
4-B3-2 Column Schedule - Tower B
4-B3-3 Spandrel Schedule - Tower B
4-AB3-4 Typical Elevation
4-AB3-5 Column Details
4-AB3-6 Spandrel Types
4-AB3-7 Connections Floor 108
4-AB3-8 Connections Floor 110
4-AB3-9 Corner Details
4-AB3-10 Tube Details

For latest date each page
See 4-AB0-0

LICENSED PROFESSIONAL ENGINEER
LESLIE E. ROBERTSON
No. 24098
STATE OF NEW YORK

WORTHINGTON, SKILLING, HELLE & JACKSON — Civil & Structural Engineers

PROJECT: THE WORLD TRADE CETER | TITLE: EXTERIOR WALL-107 to 110 - NOTES & INDEX | DATE: 4-12-67

REVISIONS

11-7-67
1-3-69
2-3-69

NOTES

1.- See drawing SA-140, 141, 142 & 143 and SB-140, 141, 142 & 143 for wall elevations
2.- All Wide Flange column material shall be ASTM A36
3.- Structural steel tubing shall be seamless and shall conform to ASTM A501

INDEX:

4-AB3-1 NOTES & INDEX
4-A3-2 Column Schedule - Tower A
4-A3-3 Spandrel Schedule - Tower A
4-B3-2 Column Schedule - Tower B
4-B3-3 Spandrel Schedule - Tower B
4-AB3-4 Typical Elevation
4-AB3-5 Column Details
4-AB3-6 Spandrel Types
4-AB3-7 Connections Floor 108
4-AB3-8 Connections Floor 110
4-AB3-9 Corner Details
4-AB3-10 Tube Details

For latest date each page see 4-AB0-0

LICENSED PROFESSIONAL ENGINEER LESLIE E. ROBERTSON No. 34360 UNIVERSITY OF THE STATE OF NEW YORK

WORTHINGTON, SKILLING, HELLE & JACKSON — Civil & Structural Engineers

PROJECT: THE WORLD TRADE CENTER | TITLE: EXTERIOR WALL -107 to 110 - NOTES & INDEX | DATE: 4-12-67

REVISIONS
11-7-67
1-3-69

NOTES

1.- See drawing SA-140, 141, 142 & 143 and SB-140, 141, 142 & 143 for wall elevations
2.- All Wide Flange column material shall be ASTM A36.
3.- Structural steel tubing shall be seamless and shall conform to ASTM A501

INDEX:

4-AB3-1	NOTES & INDEX
4-A3-2	Column Schedule - Tower A
4-A3-3	Spandrel Schedule - Tower A
4-B3-2	Column Schedule - Tower B
4-B3-3	Spandrel Schedule - Tower B
4-AB3-4	Typical Elevation
4-AB3-5	Column Details
4-AB3-6	Spandrel Types
4-AB3-7	Connections Floor 108
4-AB3-8	Connections Floor 110
4-AB3-9	Corner Details
4-AB3-10	Tube Details

For latest date each page See 4-AB0-0

LESLIE E. ROBERTSON — REGISTERED PROFESSIONAL ENGINEER — No. 24260 — STATE OF NEW YORK

WORTHINGTON, SKILLING, HELLE & JACKSON — Civil & Structural Engineers

PROJECT: THE WORLD TRADE CETER | TITLE: EXTERIOR WALL -107 to 110 - NOTES & INDEX | DATE: 4-12-67

REVISIONS
11-7-67

NOTES

1.- See drawing SA-140, 141, 142 & 143 and SB-140, 141, 142 & 143 for wall elevations
2.- All Wide Flange column material shall be ASTM A36
3.- Structural steel tubing shall be seamless and shall conform to ASTM A501

INDEX:

4-AB3-1	NOTES & INDEX
4-A3-2	Column Schedule - Tower A
4-A3-3	Spandrel Schedule - Tower A
4-B3-2	Column Schedule - Tower B
4-B3-3	Spandrel Schedule - Tower B
4-AB3-4	Typical Elevation
4-AB3-5	Column Details
4-AB3-6	Spandrel Types
4-AB3-7	Connections Floor 108
4-AB3-8	Connections Floor 110
4-AB3-9	Corner Details
4-AB3-10	Tube Details

For latest date each page see 4-AB0-0

LEONARD L. ROBERTSON