WORTHINGTON, SKILLING, HELLE & JACKSON — Civil & Structural Engineers

PROJECT: THE WORLD TRADE CENTER | TITLE: EXTERIOR WALL - PANEL TYPES 100 - 150 | DATE: 6-5-67

REVISIONS

7-18-69

Note: See 4-AB2-7 for dimension schedule

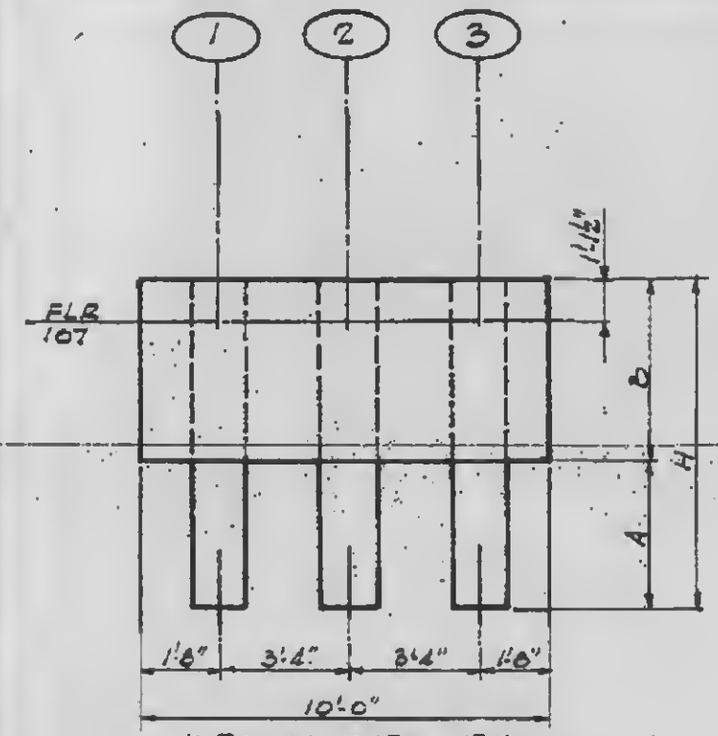

PANEL TYPE 130

Cols. 1 & 3 - Details 1 & 3
Col. 2 - Details 1 & 3

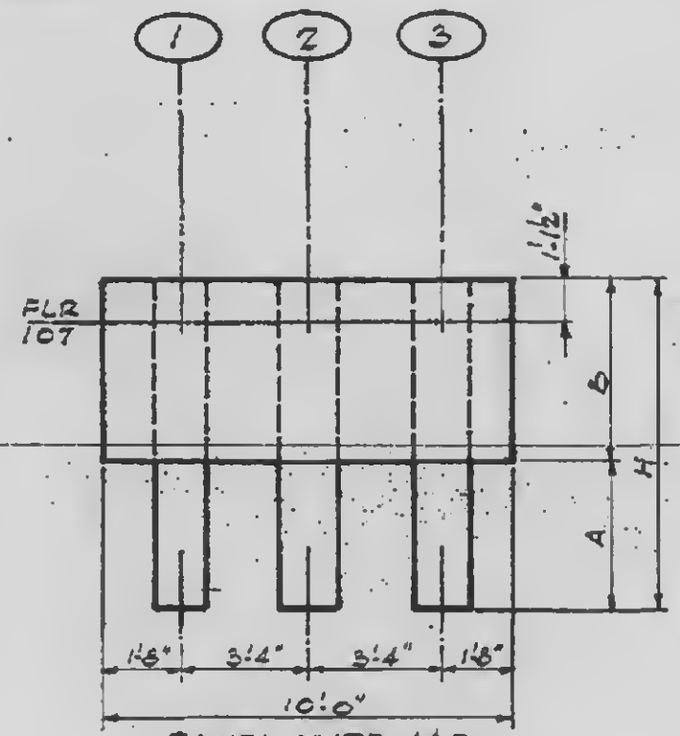

PANEL TYPE 140

Cols. 1 & 3 - Details 1 & 3
Col. 2 - Details 1 & 3

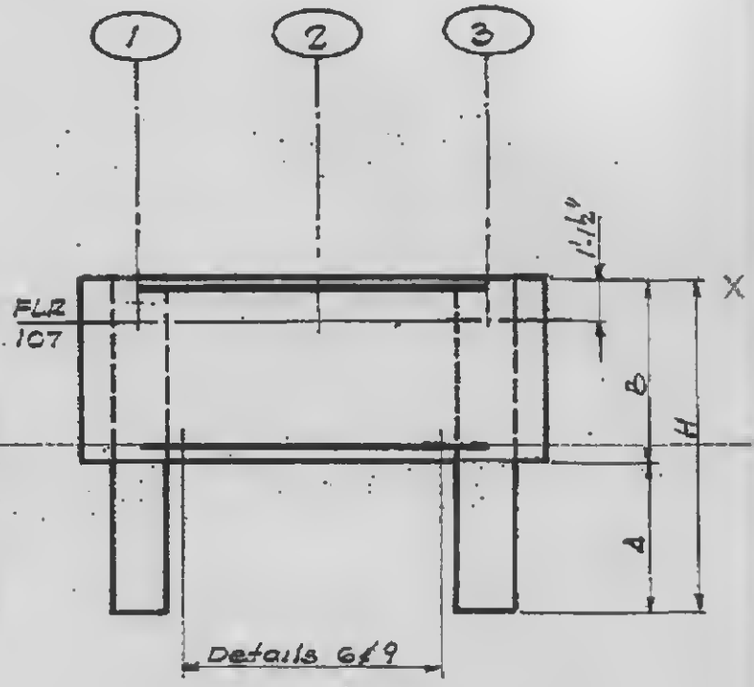

PANEL TYPE 150

Cols. 1 & 3 - Details 1 & 3

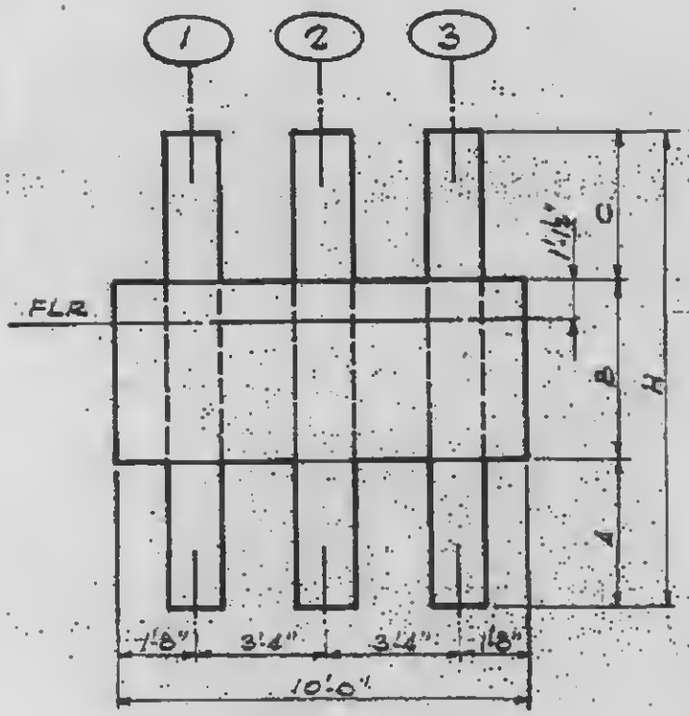

PANEL TYPES 100-102

Detail 1

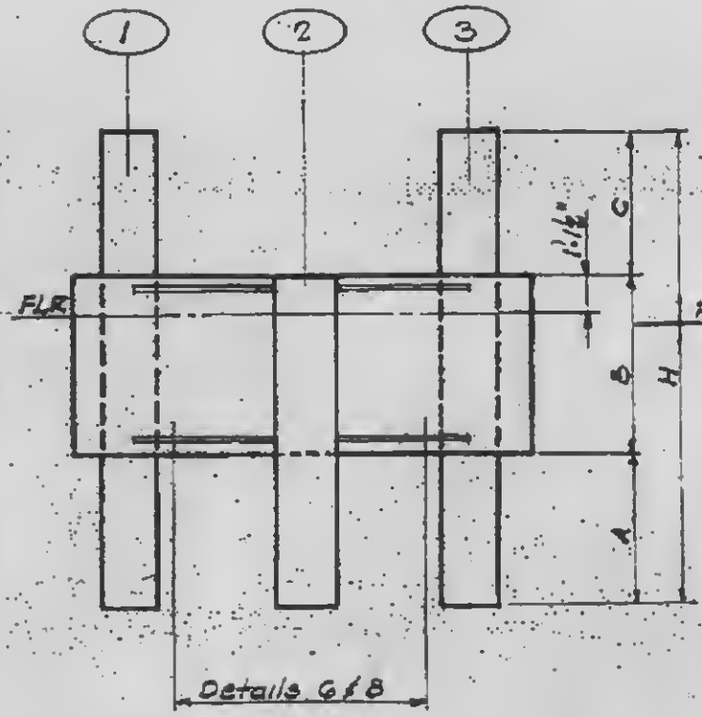

PANEL TYPES 110-112

Cols. 1 & 3 - Detail 1
Col. 2 - Details 1 & 4

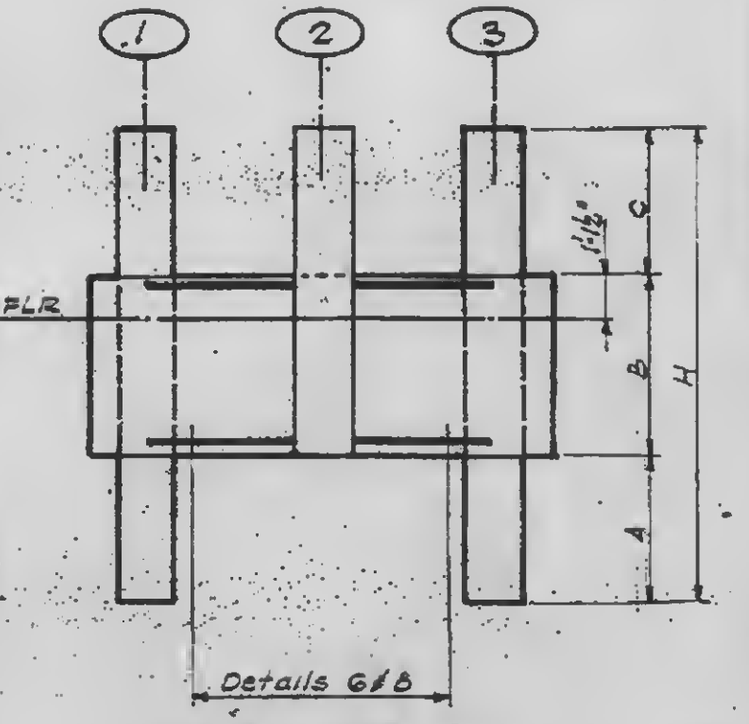

PANEL TYPE 120

Cols. 1 & 3 - Detail 1
Col. 2 - Details 1 & 4

4-AB2-2

LICENSED PROFESSIONAL ENGINEER
LESLIE E. ROBERTSON
No. 34360
UNIVERSITY OF THE STATE OF NEW YORK