WORTHINGTON, SKILLING, HELLE & JACKSON — Civil & Structural Engineers

PROJECT: THE WORLD TRADE CENTER | TITLE: EXTERIOR WALL – COLUMN TYPE 300 | DATE: 6- 5-67

REVISIONS

COLUMN TYPE	PLATE 1 T1 (IN)	PLATE 2 T2 (IN)	PLATE 3 T2 (IN)	WELD 1 IN	WELD 2 IN	WELD 3 IN	WELD 4 IN
320	1/4	1/4	1/4	1/4	1/4	5/16	1/4
321	5/16	1/4	1/4	5/16	1/4	5/16	5/16
322	3/8	1/4	1/4	5/16	1/4	5/16	5/16
323	7/16	1/4	1/4	3/8	1/4	3/8	1/2
324	1/2	1/4	1/4	3/8	1/4	3/8	1/2
325	9/16	1/4	1/4	3/8	5/16	3/8	1/2
326	5/8	1/4	1/4	3/8	5/16	3/8	1/2
327	11/16	1/4	1/4	3/8	5/16	3/8	1/2
328	3/4	1/4	1/4	3/8	5/16	3/8	1/2
329	13/16	5/16	5/16	1/2	5/16	1/2	3/4
330	7/8	5/16	5/16	1/2	5/16	1/2	3/4
331	15/16	5/16	5/16	1/2	5/16	1/2	3/4
332	1	3/8	5/8	1/2	5/16	1/2	3/4
333	1- 1/16	3/8	5/8	1/2	5/16	1/2	3/4
334	1- 1/8	3/8	5/8	1/2	5/16	1/2	3/4
335	1- 3/16	7/16	7/16	1/2	5/16	1/2	3/4
336	1- 1/4	7/16	7/16	1/2	5/16	1/2	3/4
337	1- 5/16	7/16	7/16	1/2	3/8	1/2	3/4
338	1- 3/8	1/2	1/2	1/2	3/8	1/2	3/4
339	1- 7/16	1/2	1/2	1/2	3/8	1/2	3/4
340	1- 1/2	1/2	1/2	1/2	3/8	1/2	3/4
341	1- 9/16	9/16	9/16	1/2	3/8	1/2	3/4
342	1- 5/8	9/16	9/16	1/2	3/8	1/2	3/4
343	1-11/16	9/16	9/16	1/2	3/8	1/2	3/4
344	1- 3/4	5/8	5/8	1/2	3/8	1/2	3/4
345	1-13/16	5/8	5/8	5/8	3/8	5/8	1
346	1- 7/8	5/8	5/8	5/8	3/8	5/8	1
347	1-15/16	11/16	11/16	5/8	3/8	5/8	1
348	2	11/16	11/16	5/8	3/8	5/8	1
349	2- 1/16	11/16	11/16	5/8	3/8	5/8	1
350	2- 1/8	3/4	3/4	5/8	3/8	5/8	1
351	2- 3/16	3/4	3/4	5/8	3/8	5/8	1
352	2- 1/4	3/4	3/4	5/8	3/8	5/8	1
353	2- 5/16	13/16	13/16	5/8	1/2	5/8	1
354	2- 3/8	13/16	13/16	5/8	1/2	5/8	1
355	2- 7/16	13/16	13/16	5/8	1/2	5/8	1
356	2- 1/2	7/8	7/8	5/8	1/2	5/8	1
357	2- 9/16	7/8	7/8	5/8	1/2	5/8	1
358	2- 5/8	7/8	7/8	5/8	1/2	5/8	1
359	2-11/16	15/16	15/16	5/8	1/2	5/8	1
360	2- 3/4	15/16	15/16	5/8	1/2	5/8	1

Note: Weld 1, 3 and 4 use Electrode 1. See 4-AB2-17
Weld 2 use Electrode 2. See 4-AB2-17.

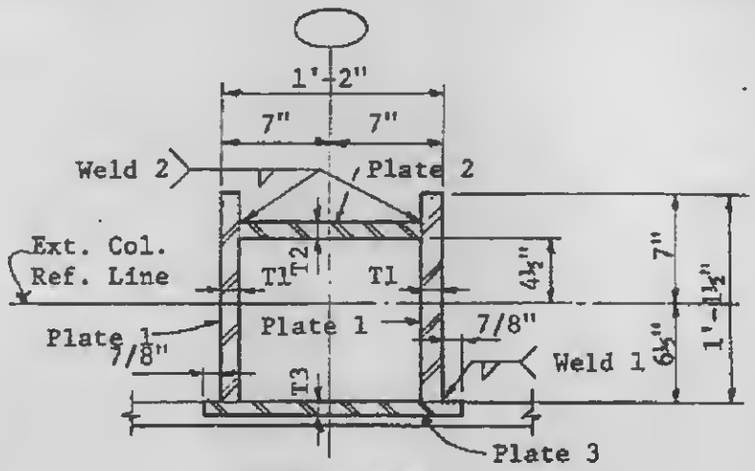

SECTION a-a
(See 4-AB2-18)

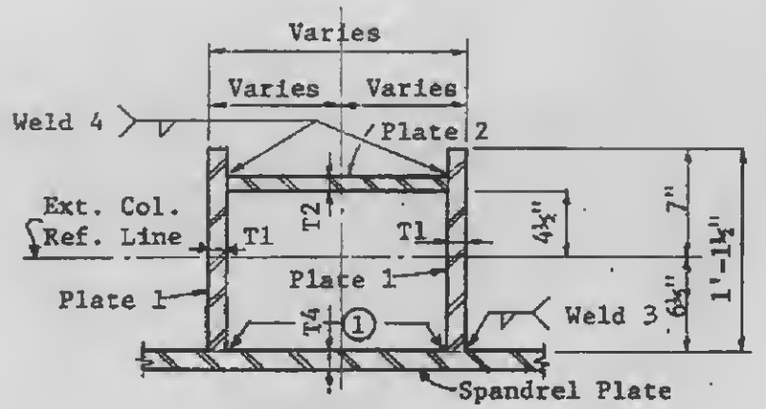

SECTION b-b
(See 4-AB2-18)

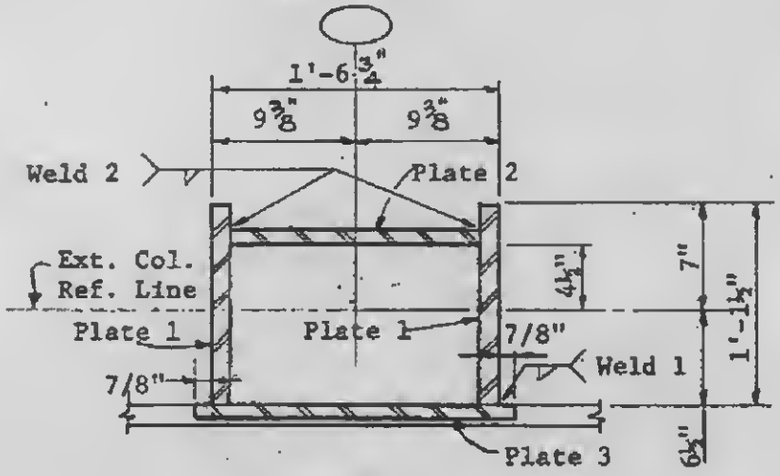

SECTION c-c
(See 4-AB2-18)
1 Weld 5 or 7; see 4-AB2-18

LICENSED PROFESSIONAL ENGINEER LESLIE E. ROBERTSON No. 34360 STATE OF NEW YORK