WORTHINGTON, SKILLING, HELLE & JACKSON — Civil & Structural Engineers

PROJECT: THE WORLD TRADE CENTER | TITLE: EXTERIOR WALL – COLUMN TYPES 400 AND 500 | DATE: 6-15-67

REVISIONS: 7-28-67

COLUMN TYPE	PLATE 1 T1 (IN)	PLATE 2 T2 (IN)	PLATE 3 T2 (IN)	WELD 1 IN	WELD 3 IN
430	7/8	5/16	5/16	1/2	1/2
431	15/16	5/16	5/16	1/2	1/2
432	1	3/8	3/8	1/2	1/2
433	1- 1/16	3/8	3/8	1/2	1/2
442	1- 5/8	9/16	9/16	1/2	1/2
443	1-11/16	9/16	9/16	1/2	1/2
444	1- 3/4	5/8	5/8	1/2	1/2
445	1-13/16	5/8	5/8	5/8	5/8
520	1/4	1/4	1/4	1/4	5/16
521	5/16	1/4	1/4	5/16	5/16
522	3/8	1/4	1/4	5/16	5/16
523	7/16	1/4	1/4	3/8	3/8
524	1/2	1/4	1/4	3/8	3/8
525	9/16	1/4	1/4	3/8	3/8
526	5/8	1/4	1/4	3/8	3/8
527	11/16	1/4	1/4	3/8	3/8
528	3/4	1/4	1/4	3/8	3/8
529	13/16	5/16	5/16	1/2	1/2
530	7/8	5/16	5/16	1/2	1/2
531	15/16	5/16	5/16	1/2	1/2
532	1	3/8	3/8	1/2	1/2
533	1- 1/16	3/8	3/8	1/2	1/2
534	1- 1/8	3/8	3/8	1/2	1/2
535	1- 3/16	7/16	7/16	1/2	1/2
536	1- 1/4	7/16	7/16	1/2	1/2
537	1- 5/16	7/16	7/16	1/2	1/2
538	1- 3/8	1/2	1/2	1/2	1/2
539	1- 7/16	1/2	1/2	1/2	1/2
540	1- 1/2	1/2	1/2	1/2	1/2
541	1- 9/16	9/16	9/16	1/2	1/2
542	1- 5/8	9/16	9/16	1/2	1/2
543	1-11/16	9/16	9/16	1/2	1/2
544	1- 3/4	5/8	5/8	1/2	1/2
545	1-13/16	5/8	5/8	5/8	5/8
546	1- 7/8	5/8	5/8	5/8	5/8
547	1-15/16	11/16	11/16	5/8	5/8
548	2	11/16	11/16	5/8	5/8
549	2- 1/16	11/16	11/16	5/8	5/8
550	2- 1/8	3/4	3/4	5/8	5/8
551	2- 3/16	3/4	3/4	5/8	5/8
552	2- 1/4	3/4	3/4	5/8	5/8
553	2- 5/16	13/16	13/16	5/8	5/8
554	2- 3/8	13/16	13/16	5/8	5/8
555	2- 7/16	13/16	13/16	5/8	5/8
556	2- 1/2	7/8	7/8	5/8	5/8
557	2- 9/16	7/8	7/8	5/8	5/8
558	2- 5/8	7/8	7/8	5/8	5/8

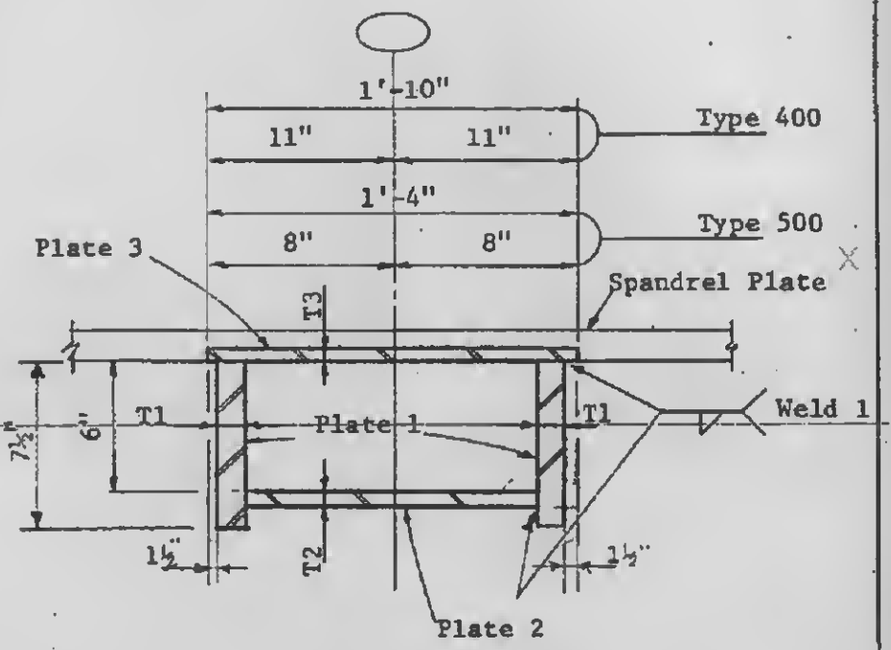

SECTION a-a

(See 4-AB2-21)

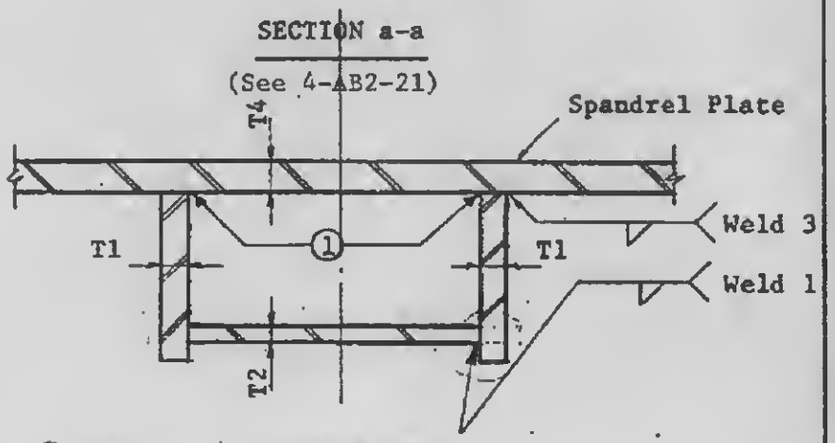

① Weld 5 or 7; see 4-AB2-21

SECTION b-b

(See 4-AB2-21)

Note: Weld 1 and 3 use Electrode 1. See 4-AB2-17

LICENSED PROFESSIONAL ENGINEER LESLIE E. ROBERTSON No. 34360 STATE OF NEW YORK

4-AB2- 10