WORTHINGTON, SKILLING, HELLE & JACKSON — Civil & Structural Engineers

PROJECT THE WORLD TRADE CENTER | TITLE EXTERIOR WALL COLUMN SPLICE 121-123 | DATE 6-5-67

REVISIONS

7-28-67
3-11-68

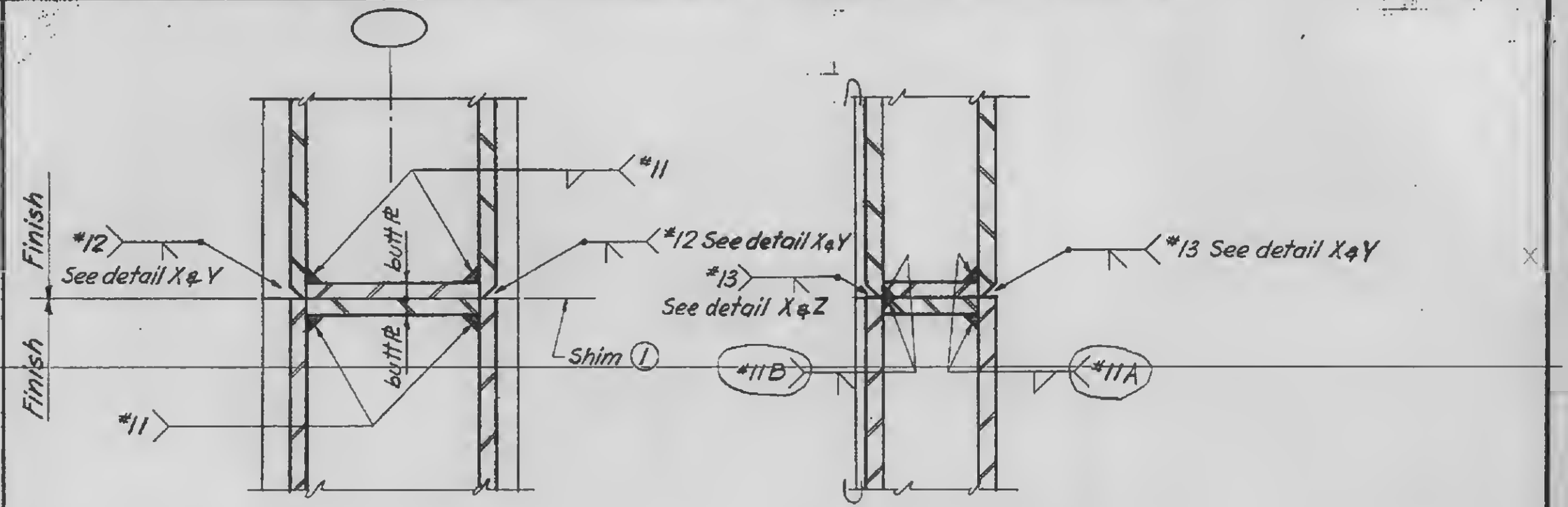

SECTION a-a

SECTION b-b

(1) Erector to supply shims of 18 ga. stock where required to maintain full bearing. Shim material to be ASTM A 245, Grade D

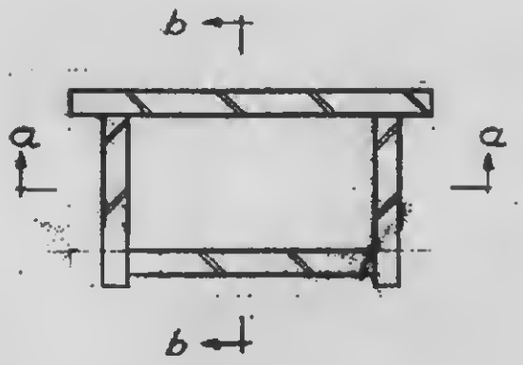

PLAN BELOW SPLICE

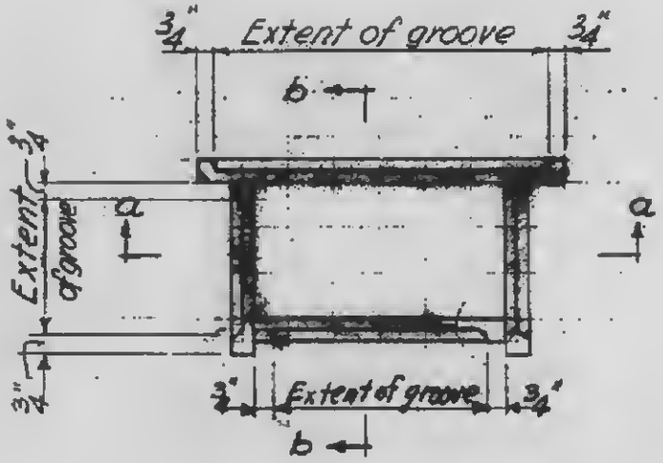

PLAN ABOVE SPLICE

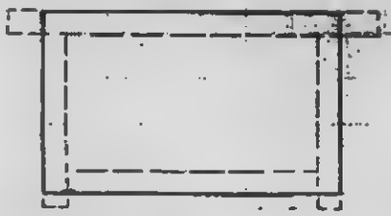

PLAN OF SHIM

For details X, Y & Z see 4-AB2-16
For welds *11 *12 & *13 see 4-AB2-15
For butt ℞ see 4-AB2-15

LICENSED PROFESSIONAL ENGINEER LESLIE E. ROBERTSON No. 34360 UNIVERSITY OF THE STATE OF NEW YORK

4-AB2-14