WORTHINGTON, SKILLING, HELLE & JACKSON — Civil & Structural Engineers

PROJECT THE WORLD TRADE CENTER | TITLE EXTERIOR WALL - DETAIL 4 & 5 | DATE 6-5-67

REVISIONS

7-28-67

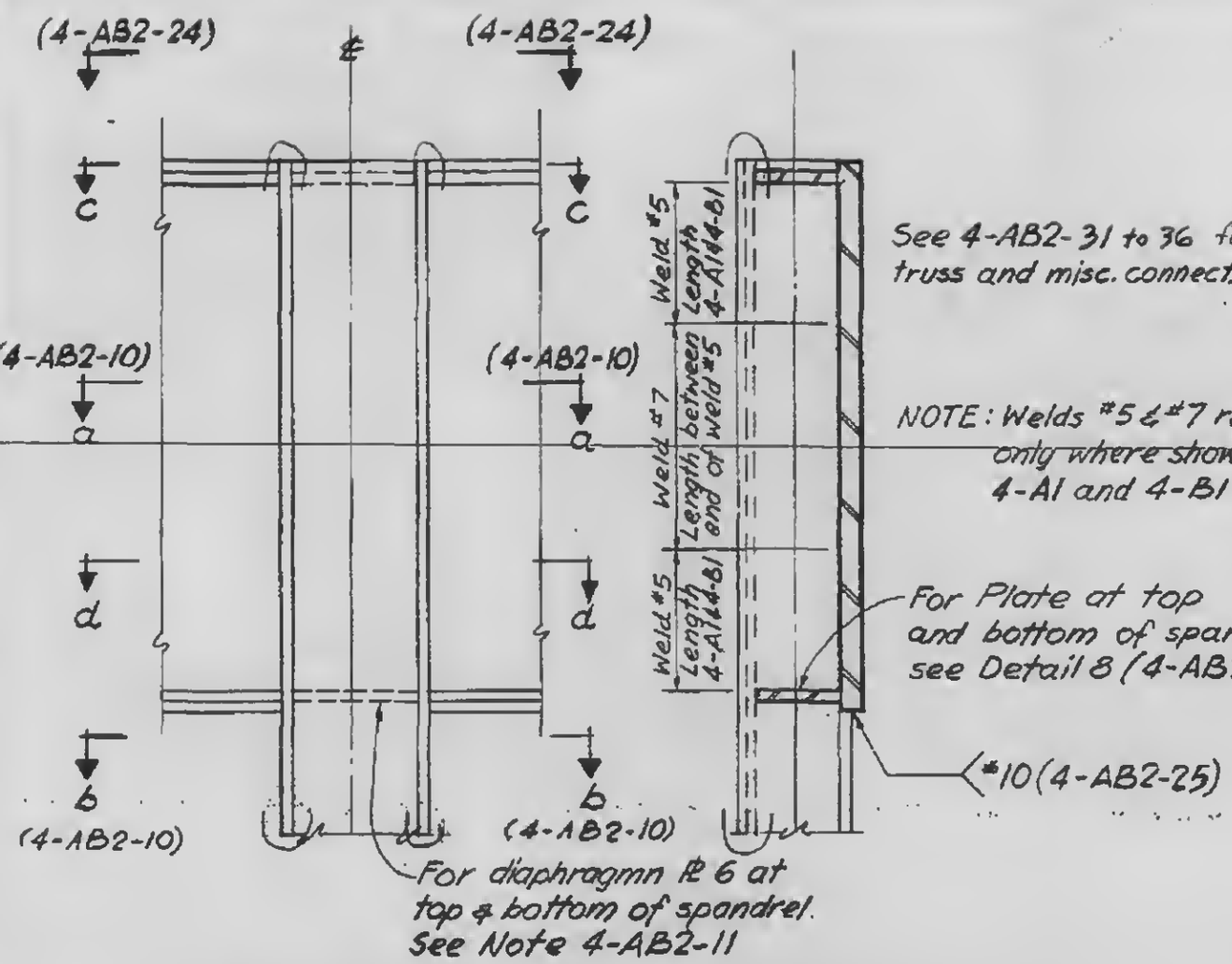

ELEVATION

See 4-AB2-31 to 36 for beam, truss and misc. connect.

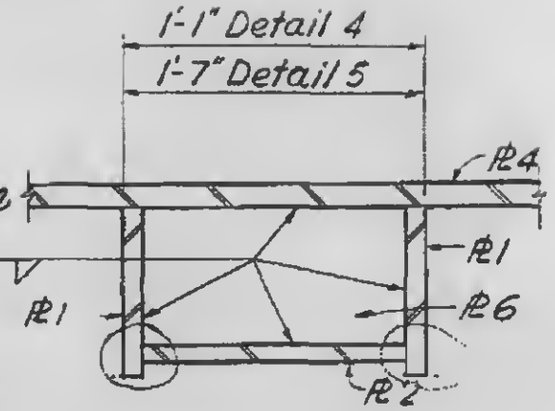

NOTE: Welds #5 & #7 required only where shown in 4-A1 and 4-B1

SECTION C-C

SECTION X-X

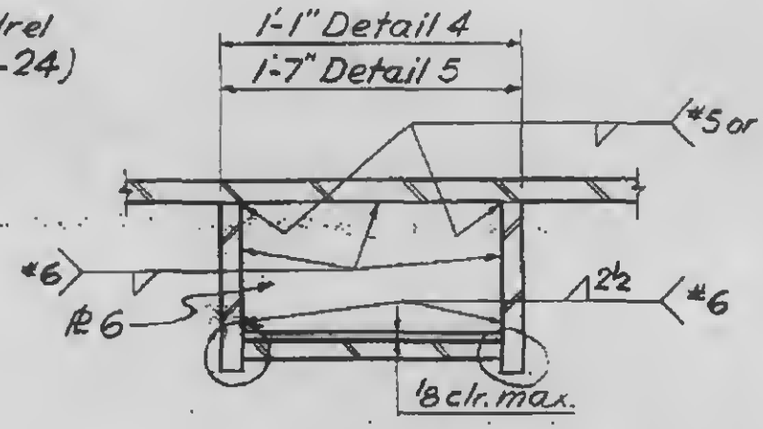

SECTION d-d

NOTES
1. Detail 4 applies to columns of type 500
   Detail 5 applies to columns of type 400
2. See 4-AB2-10 for ℞s 1, 2 & 3 and welds #1, #2 & #3.
3. See 4-A1 & 4-B1 for welds #5, #6 & #7, and ℞4
4. Electrodes for welds #5, #6 & #7 shall be Electrodes 1. See 4-AB2-17

LICENSED PROFESSIONAL ENGINEER LESLIE E. ROBERTSON NO. 34360 UNIVERSITY OF THE STATE OF NEW YORK

4-AB2-21