WORTHINGTON, SKILLING, HELLE & JACKSON — Civil & Structural Engineers

PROJECT THE WORLD TRADE CENTER | TITLE EXTERIOR WALL - SEAT DETAILS 1013-3511 | DATE 7-10-67

REVISIONS

8-28-67
11-7-67

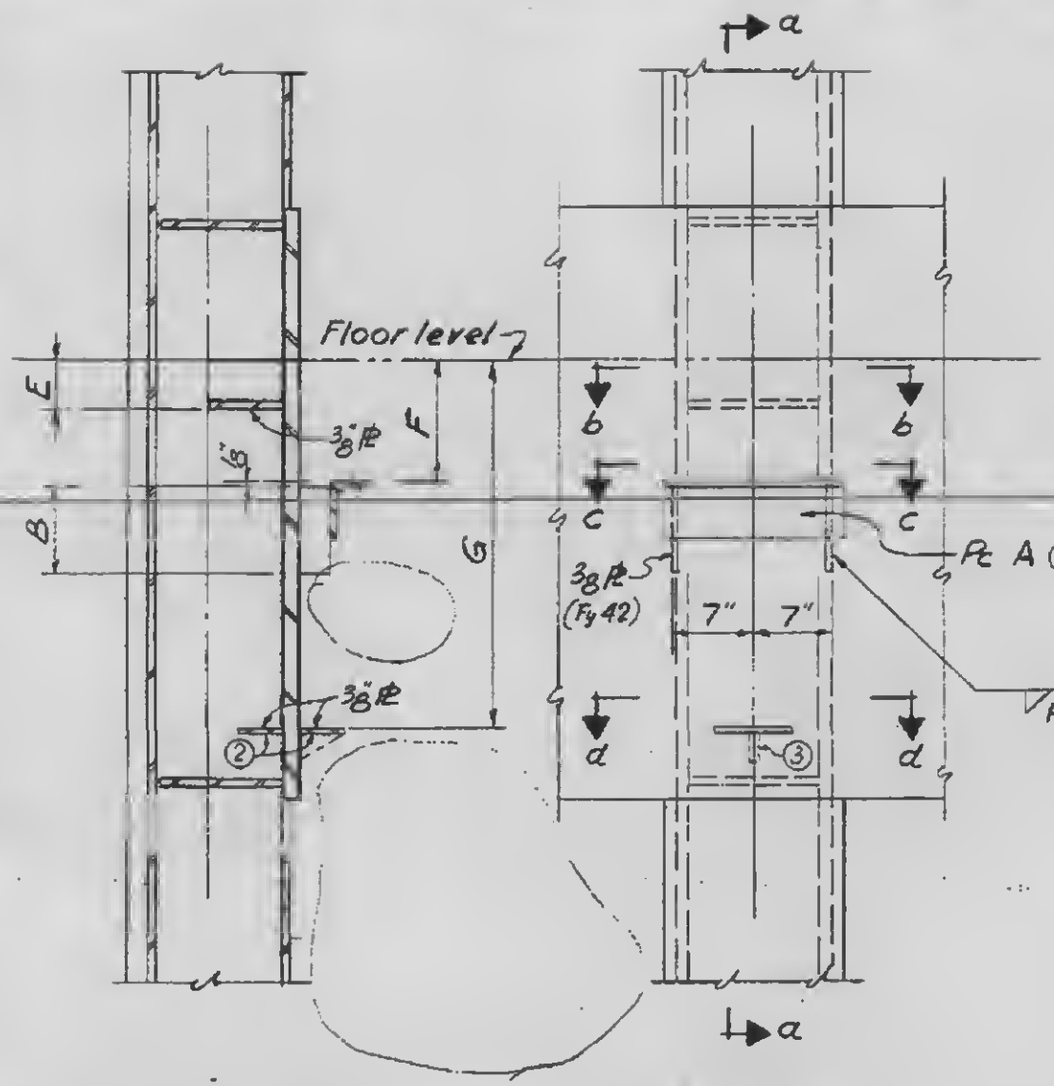

SECTION a-a

ELEVATION

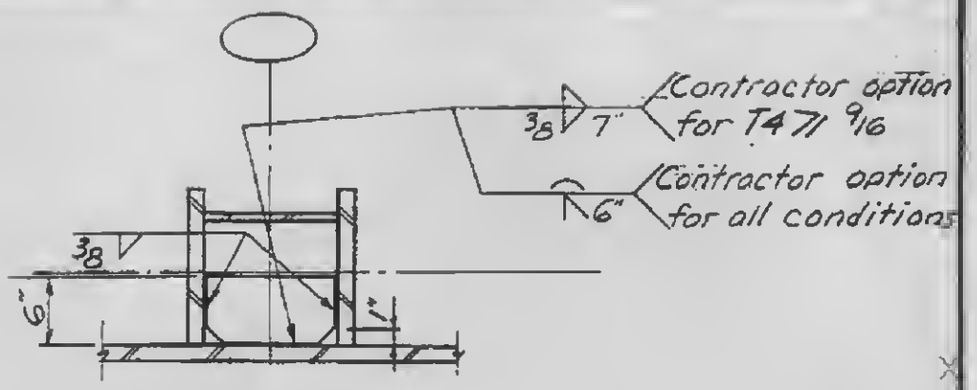

SECTION b-b

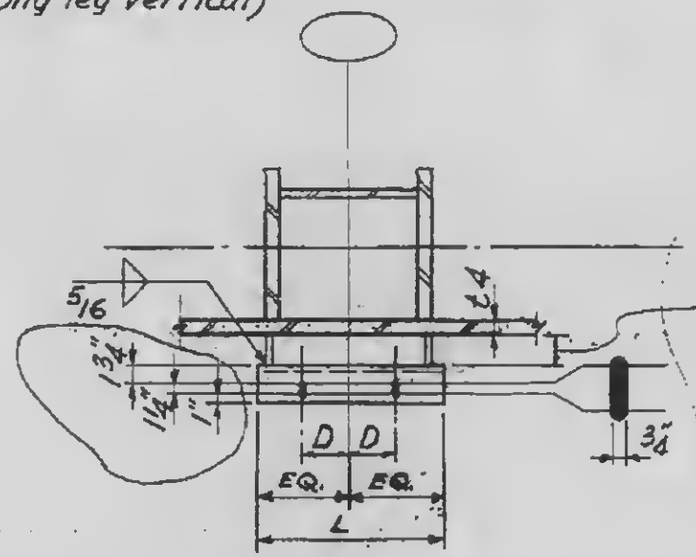

	t 4
1 3/8	1 3/8 - 1 1/8
1 5/8	1 1/16 - 7/8
1 7/8	13/16 - 5/8
2 1/8	9/16 - 3/8

SECTION c-c

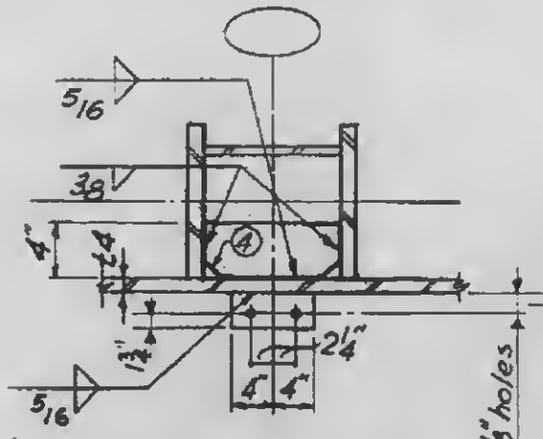

	t 4
2 7/8	1 3/8 - 1 1/8
3 1/8	1 1/16 - 7/8
3 3/8	13/16 - 5/8
3 5/8	9/16 - 3/8

SECTION d-d

NOTES

1. See 4-AB2-35 for schedule
2. Omit these plates if "G" is omitted from schedule
3. Stiffener plate at option of contractor
4. Clip corners of inside plates if necessary to clear welds "5 or "7

LICENSED PROFESSIONAL ENGINEER
LESLIE E. ROBERTSON
No. 34360
UNIVERSITY OF THE STATE OF NEW YORK

4-AB2-31