WORTHINGTON, SKILLING, HELLE & JACKSON — Civil & Structural Engineers

PROJECT THE WORLD TRADE CENTER | TITLE EXTERIOR WALL - SEAT DETAILS 4064 - 4731 | DATE 7-10-67

REVISIONS

8-28-67
11-7-67
11-30-67
10-18-68
3-12-69
11-10-69
3-16-70

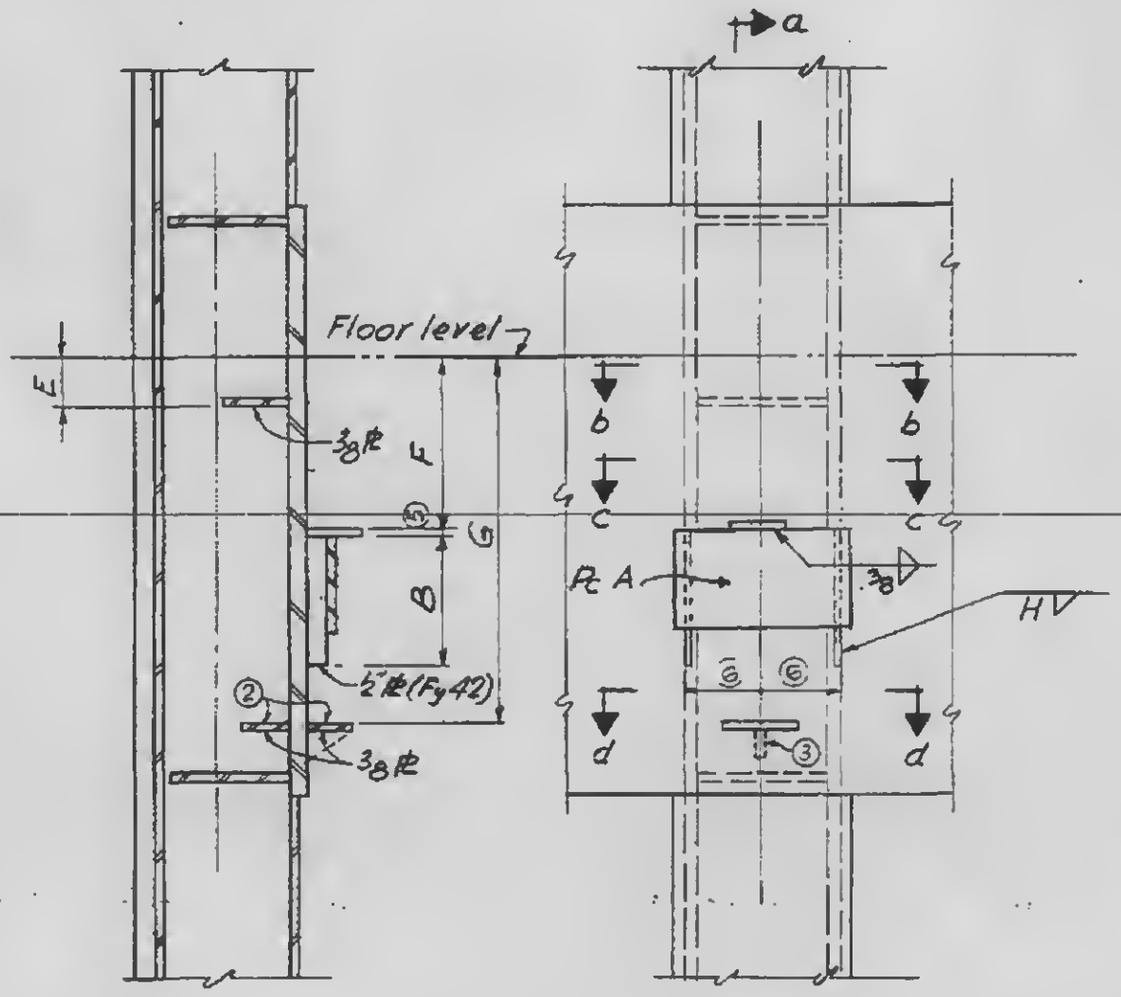

SECTION a-a

ELEVATION

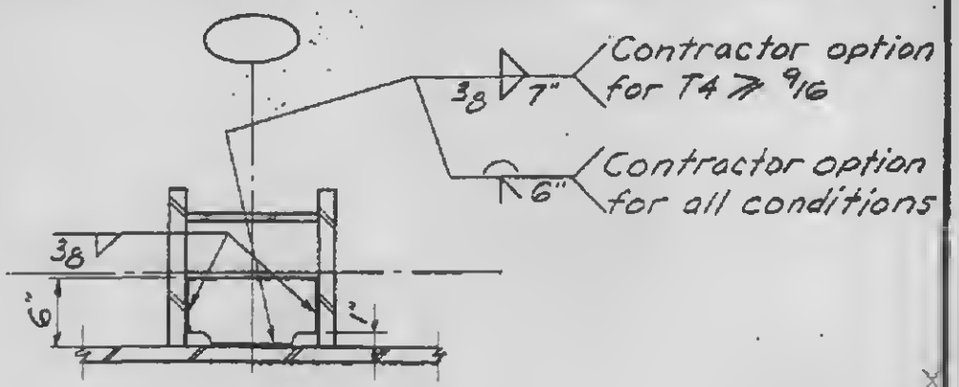

SECTION b-b

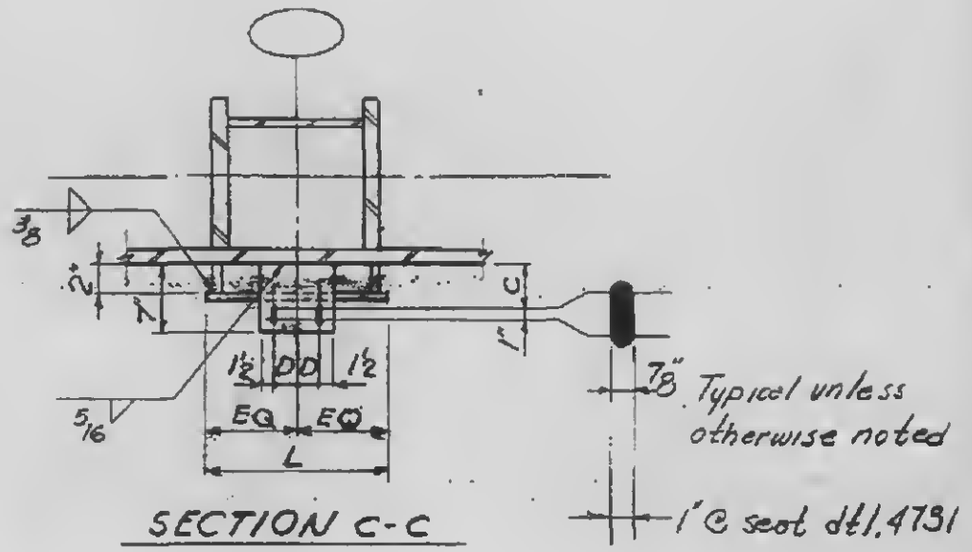

SECTION c-c

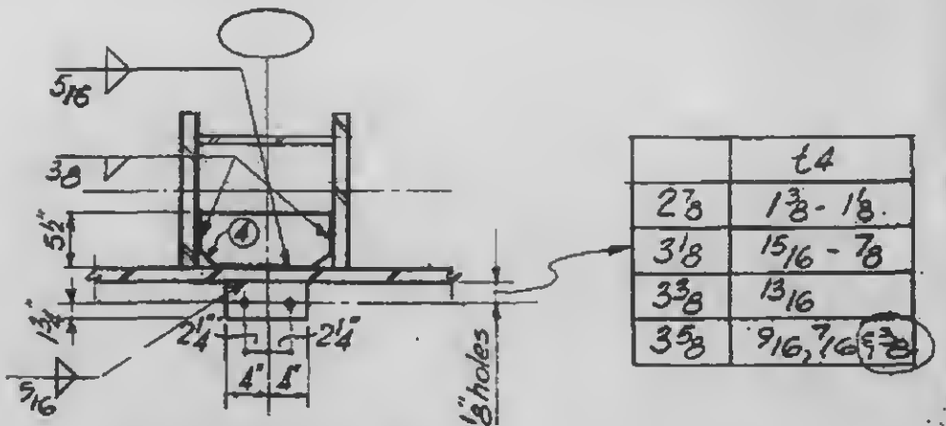

	t4
2 3/8	1 3/8 - 1 1/8
3 1/8	15/16 - 7/8
3 3/8	13/16
3 5/8	9/16, 7/16

SECTION d-d

NOTES

1. See 4-AB2-35, 36 & 37, for schedule
2. Omit these plates if 'G' is omitted from schedule
3. Stiffener plate at option of contractor
4. Clip corners of inside plates if necessary to clear welds 5 or 7
5. Thickness of PL same as thickness of piece A
6. This dimension 7 3/4" at floors 41 and 75; 8" at floors 43 and 77; 5 1/2" at floor 107, 7" all other floors where seats of this type are required.

LICENSED PROFESSIONAL ENGINEER — LESLIE E. ROBERTSON — No. 34360 — UNIVERSITY OF THE STATE OF NEW YORK

4-AB2-32