SKILLING - HELLE - CHRISTIANSEN - ROBERTSON Structural & Civil Engineers

PROJECT THE WORLD TRADE CENTER | TITLE EXTERIOR WALL SEAT DETAILS | DATE 7-10-67

REVISIONS

-28-67
11-7-67
7-15-68
10-18-68
3-16-70

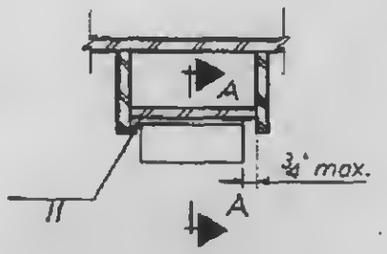

DETAIL 5010
Col. No. 100, 200
300, 400

CASE I

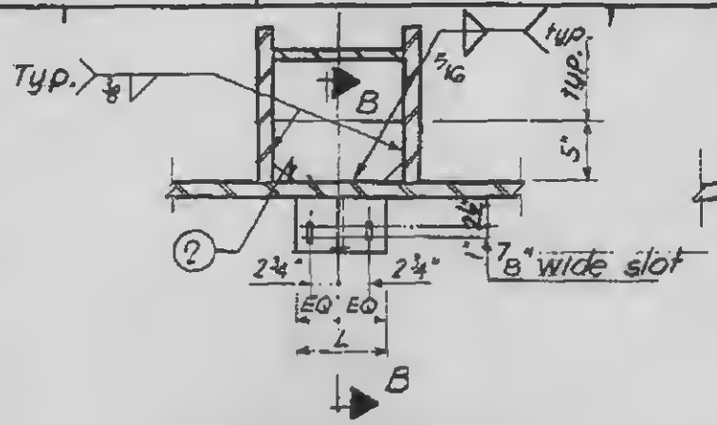

DETAIL 5010 5310
5410, 5510, 5610
All cols. where sch. except case I

CASE II

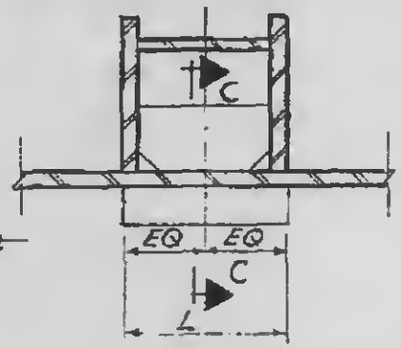

DETAIL 5110
All columns where sch. not included in case IV

CASE III

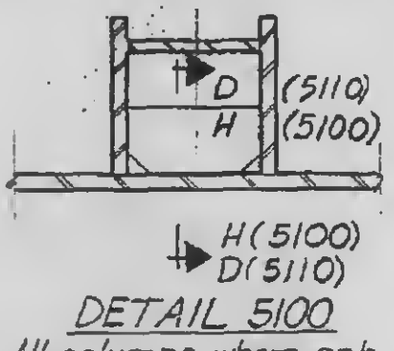

DETAIL 5100
All columns where sch.
DETAIL 5110
Col. No. 205, 207, 216, 244
253, 255, 405, 407, 416
444, 453, 455

CASE IV

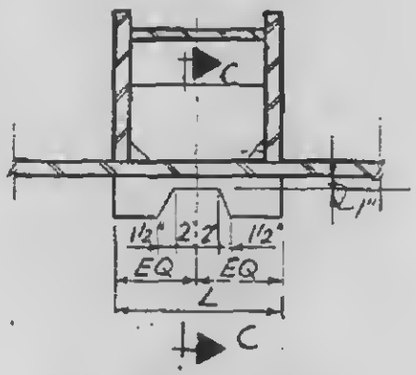

DETAIL 5210
Col. No. 110, 120, 130, 140, 150, 220
230, 240, 310, 320, 330, 340
350, 420, 430, 440

CASE V

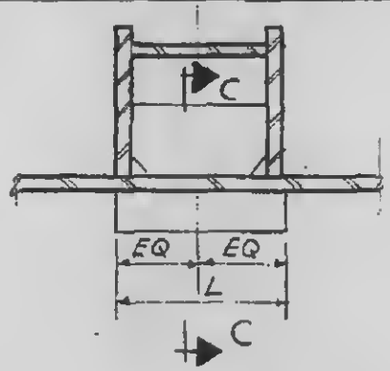

DETAIL 5210
All cols. where scheduled not included in case V, VII, VIII

CASE VI

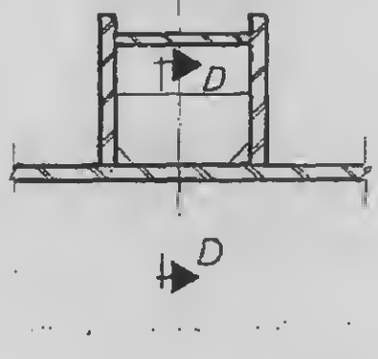

DETAIL 5210
Col. No. 203, 209, 213, 247, 251
257, 403, 409, 413, 441, 451, 457

CASE VII

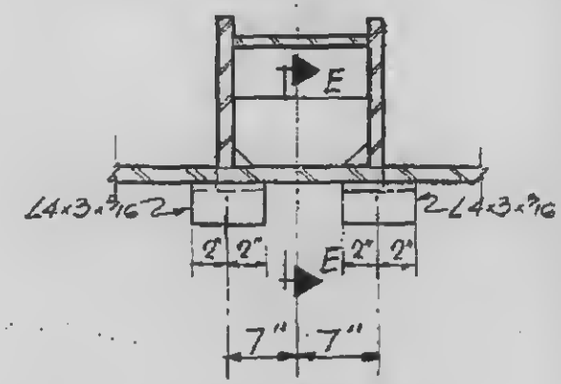

DETAIL 5210
Col. No. 211, 249,
411, 449.

CASE VIII

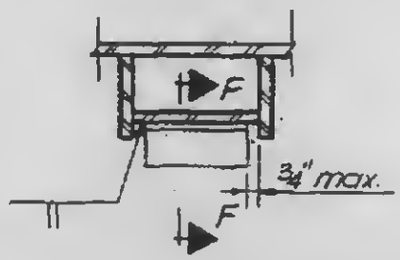

DETAIL 6020
Col. No. 100, 200, 300 & 400

CASE IX

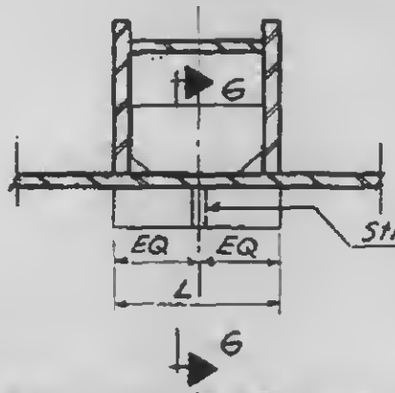

DETAILS 6020 (except case IX)
6220 (except case XI),
6120, 6320, 6520, 6620, 6720, 6820

CASE X

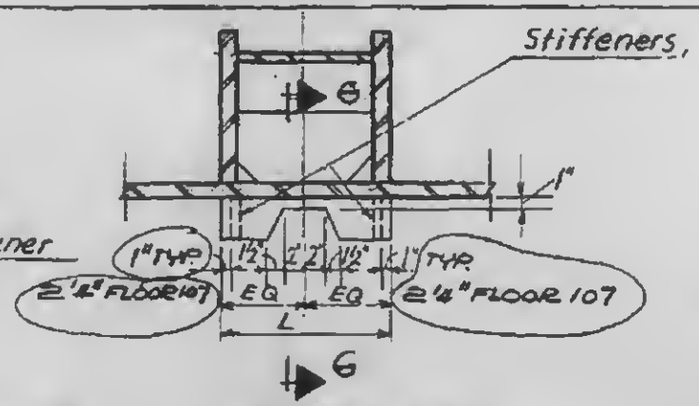

DETAIL 6220
Col. No. 110, 120, 130, 140, 150, 220, 230, 240, 211, 249
310, 320, 330, 340, 350, 420, 430, 440, 411, 449

CASE XI

For Sections
A-A thru H-H
see 4-AB2-33.1

4-AB2-33

LICENSED PROFESSIONAL ENGINEER
LESLIE E. ROBERTSON
No. 34960
UNIVERSITY OF THE STATE OF NEW YORK