JRIELING, HELLE, CHRISTIANSEN, ROBERTSON Structural & Civil Engineers

PROJECT THE WORLD TRADE CENTER	TITLE EXTERIOR WALL CONNECTIONS - FLOOR 110	DATE 8-3-70

REVISIONS

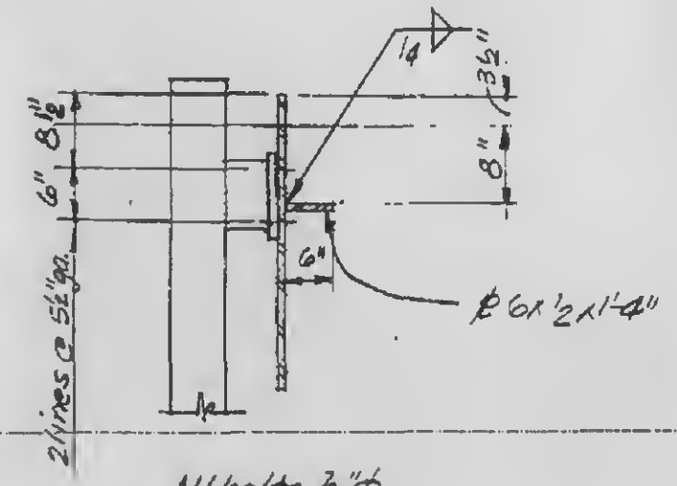

All bolts ⅞"Φ

DETAIL 42

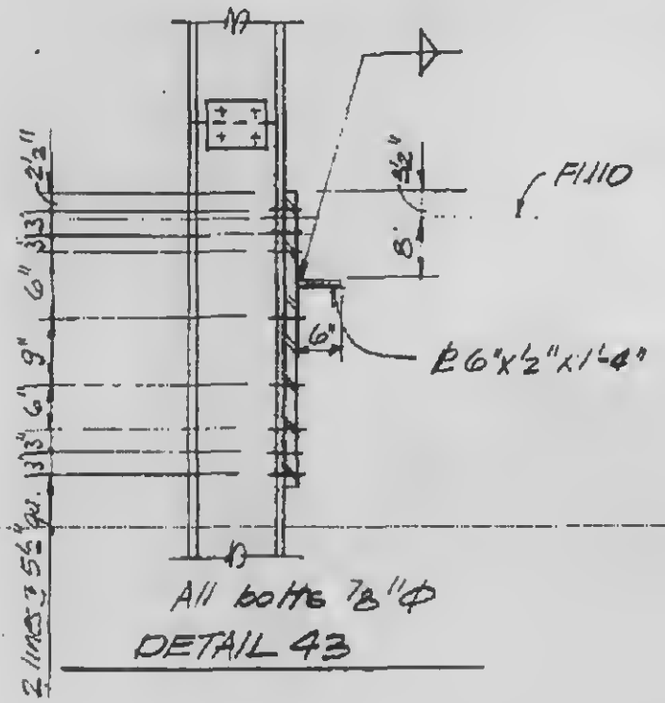

All bolts ⅞"Φ

DETAIL 43

LICENSED PROFESSIONAL ENGINEER
LESLIE E. ROBERTSON
No. 34360
UNIVERSITY OF THE STATE OF NEW YORK

SIGNED

DRAWN

REVIEWED

4-AB3-8.2