SKILLING, HELLE, CHRISTIANSEN, ROBERTSON — Structural & Civil Engineers

PROJECT THE WORLD TRADE CENTER | TITLE EXTERIOR WALL CONNECTIONS - FLOOR 110 | DATE 4-12-67

REVISIONS

12/15/69
2-26-70
3-16-70
8-3-70

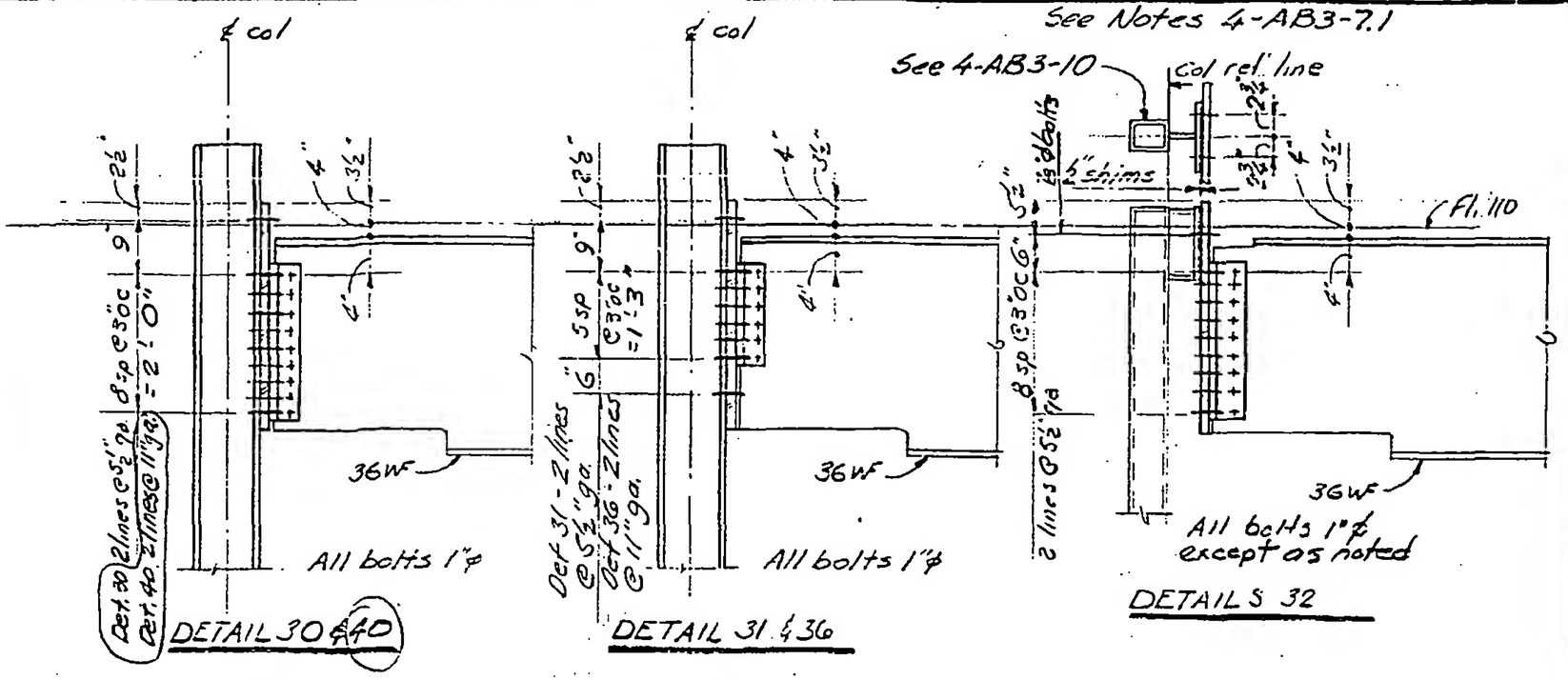

DETAIL 30 & 40 — DETAIL 31 & 36 — DETAIL S 32

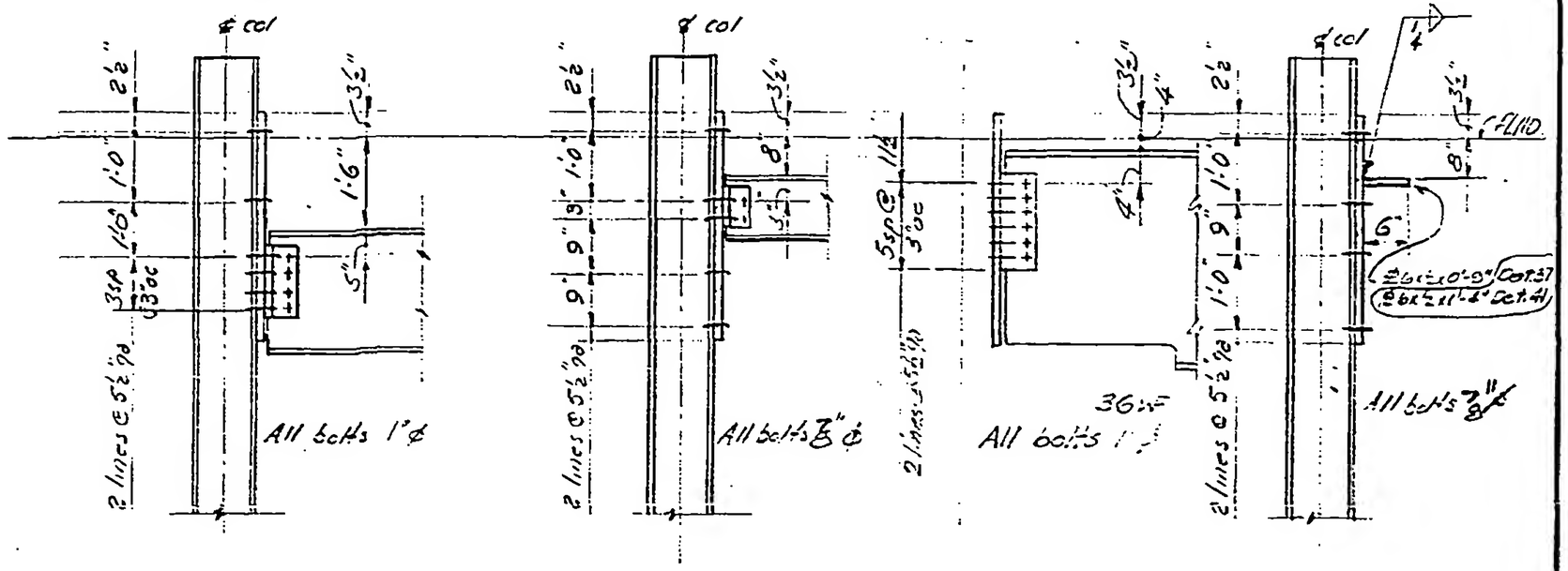

DETAIL 34 — DETAIL 35 — DETAIL 36 — DETAIL 37 & 41

4-AB3-8.1

DESIGNED IRB
DRAWN IRB
REVIEWED