WORTHINGTON, SKILLING, HELLE & JACKSON — Civil & Structural Engineers

PROJECT THE WORLD TRADE CENTER | TITLE CONNECTION DETAIL 201 E,F,G,H,I | DATE 4-5-67

REVISIONS
9-15-67
10-2-67
10-5-67

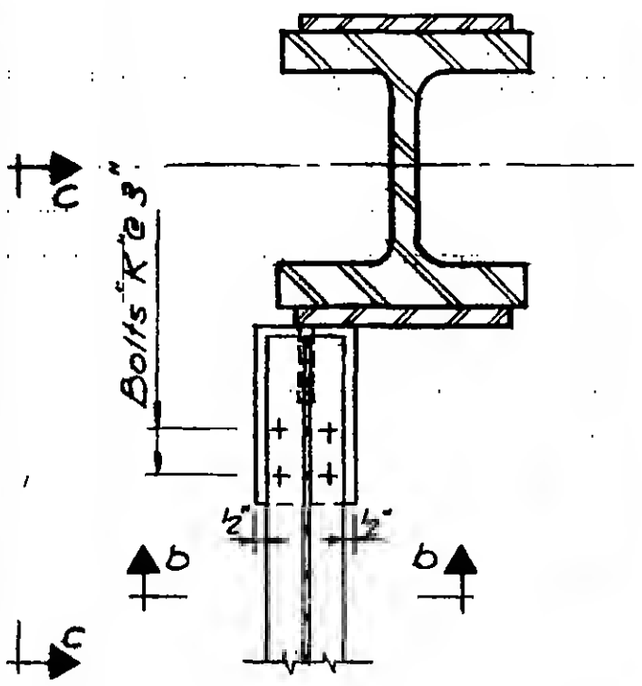

Plan a-a

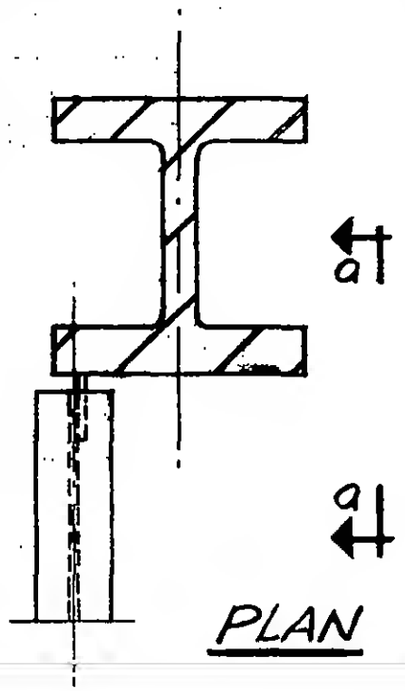

PLAN

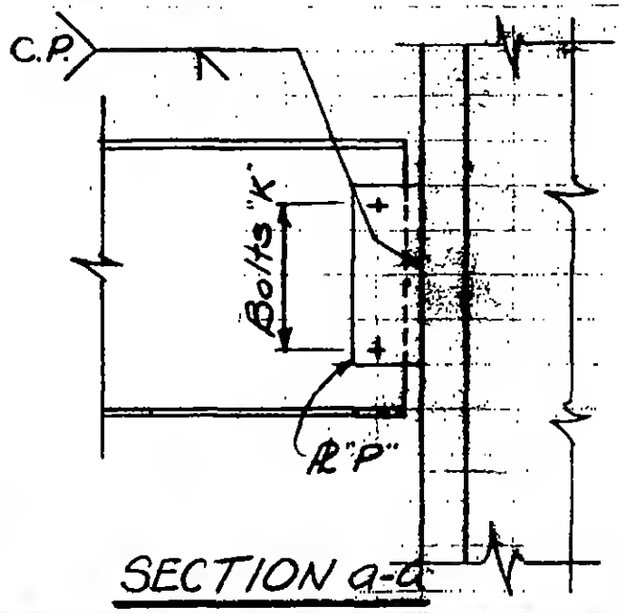

SECTION a-a

DETAIL 201 F,G,H,I,P,Q

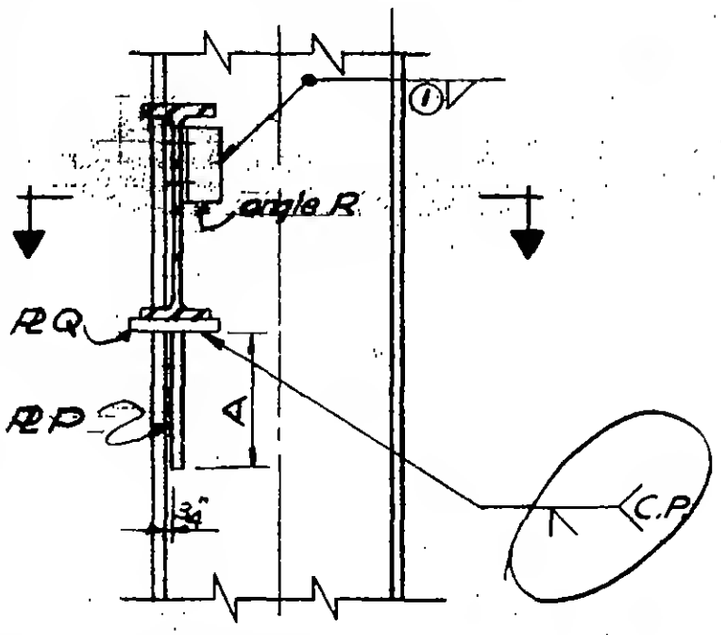

Section b-b

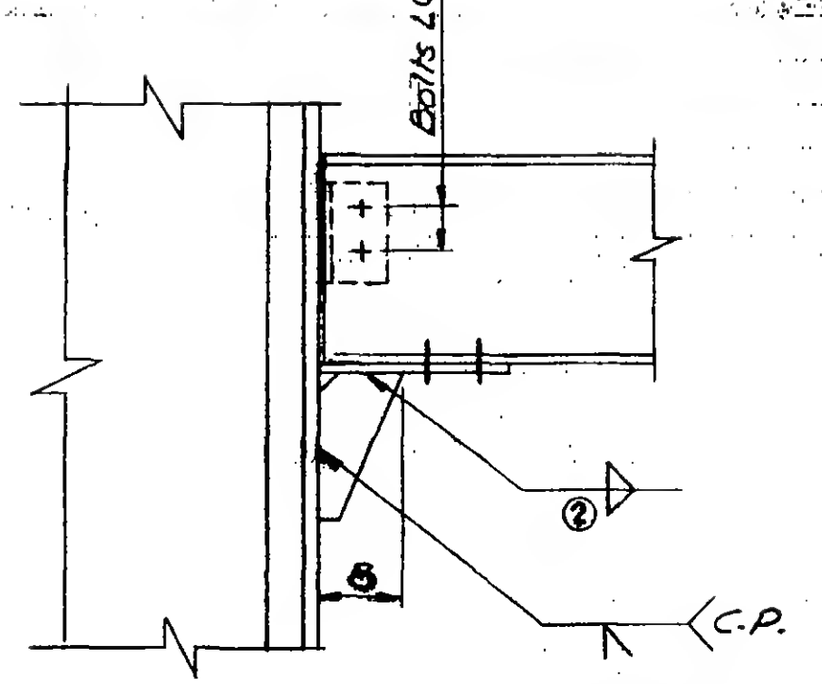

Section c-c

DETAIL 201 E

6-AB1-2.2

LICENSED PROFESSIONAL ENGINEER
LESLIE E. ROBERTSON
No. 34360
UNIVERSITY OF THE STATE OF NEW YORK