WORTHINGTON, SKILLING, HELLE & JACKSON — Civil & Structural Engineers

PROJECT THE WORLD TRADE CENTER | TITLE ~~CONNECTION DETAIL~~ 202 A, B, C, D, E, F, G | DATE 5-22-67

REVISIONS
7-25-67
8-5-67
8-14-67
9-15-67
10-2-67
12-21-67

NOTE
For sections see
6-ABI-5.2 & 5.3

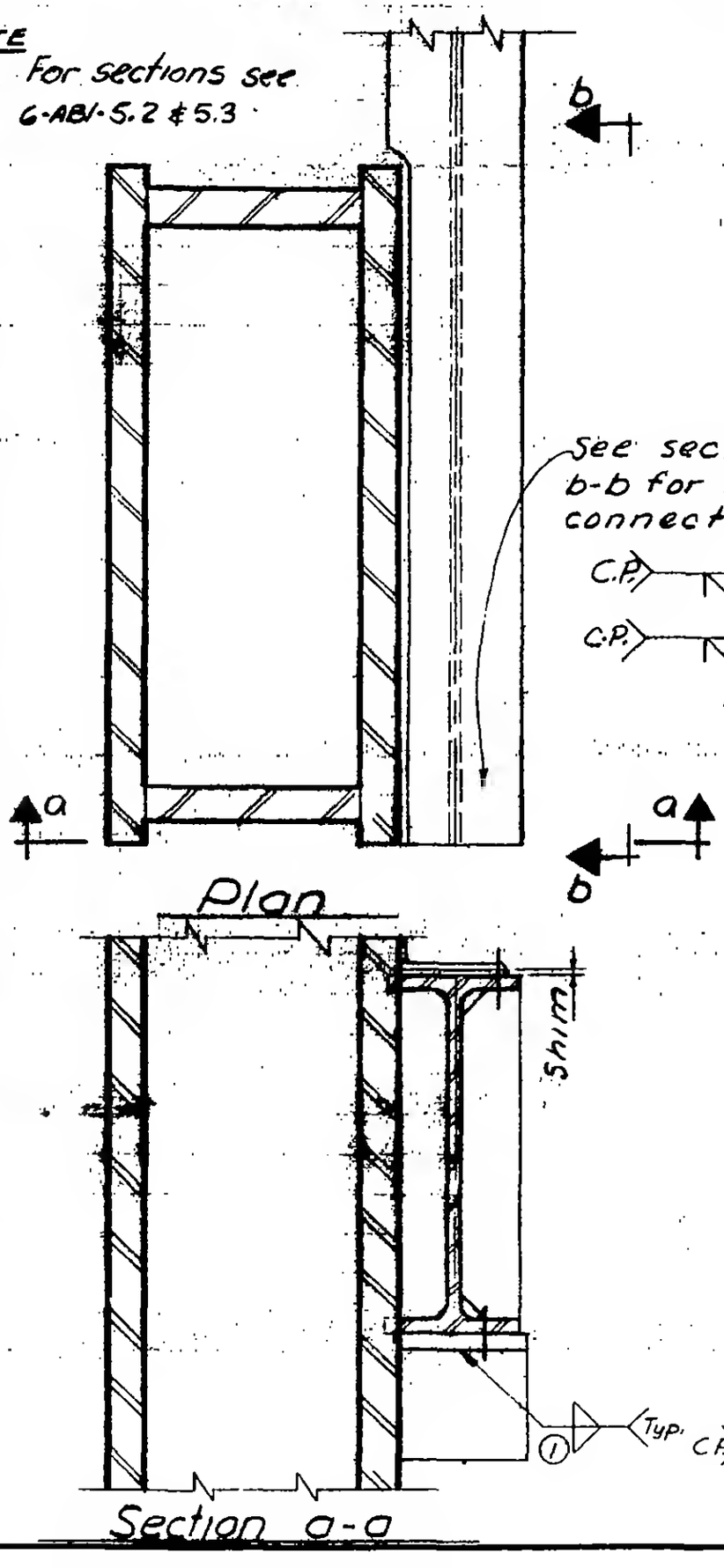

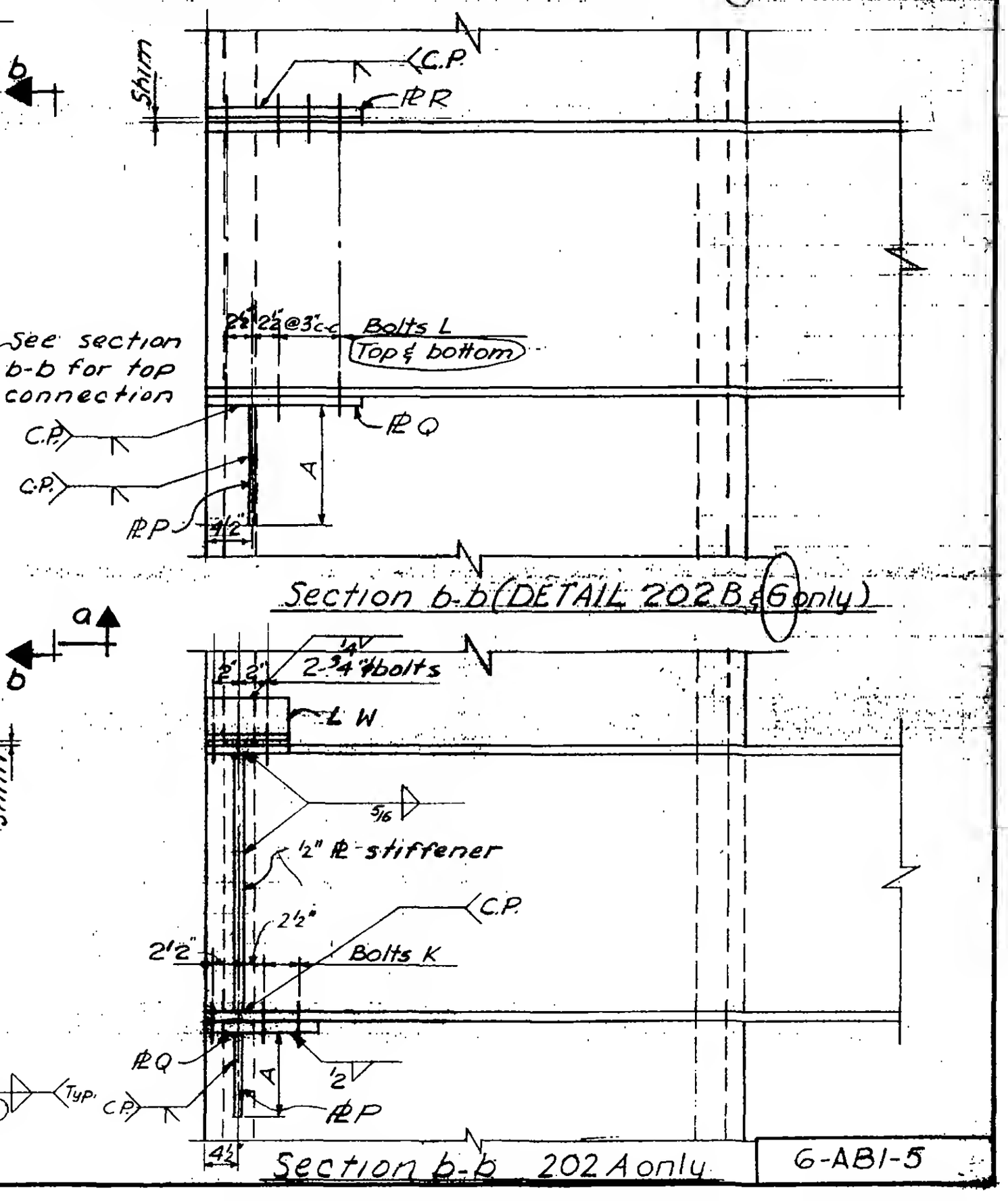

LICENSED PROFESSIONAL ENGINEER
LESLIE E. ROBERTSON
No. 34968
UNIVERSITY OF THE STATE OF NEW YORK

6-ABI-5