SKILLING - HELLE - CHRISTIANSEN - ROBERTSON Structural & Civil Engineers

PROJECT THE WORLD TRADE CENTER | TITLE CONNECTION DETAIL 202E & F | DATE 9-15-67

REVISIONS

10-2-67

11-10-67

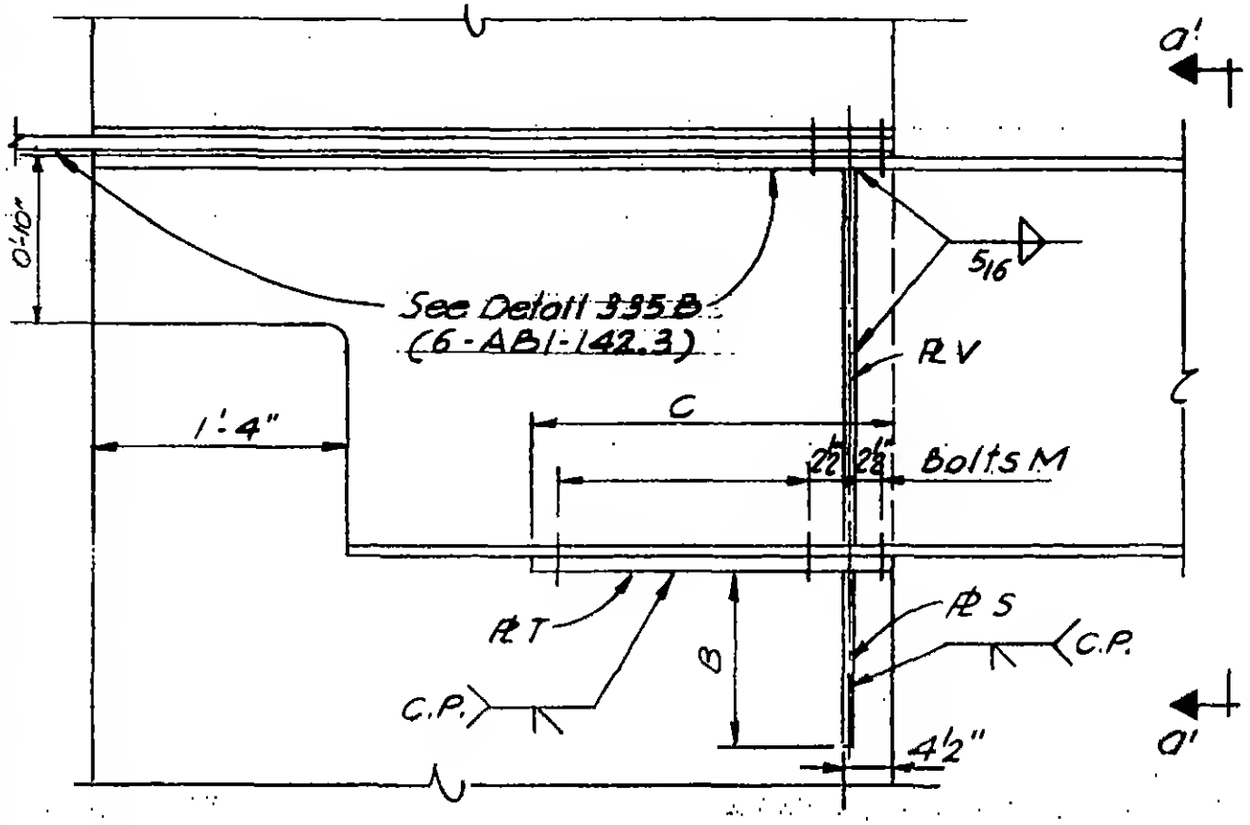

Section b-b, 202E & F

(See dwg. 6-AB1-5 for plan)

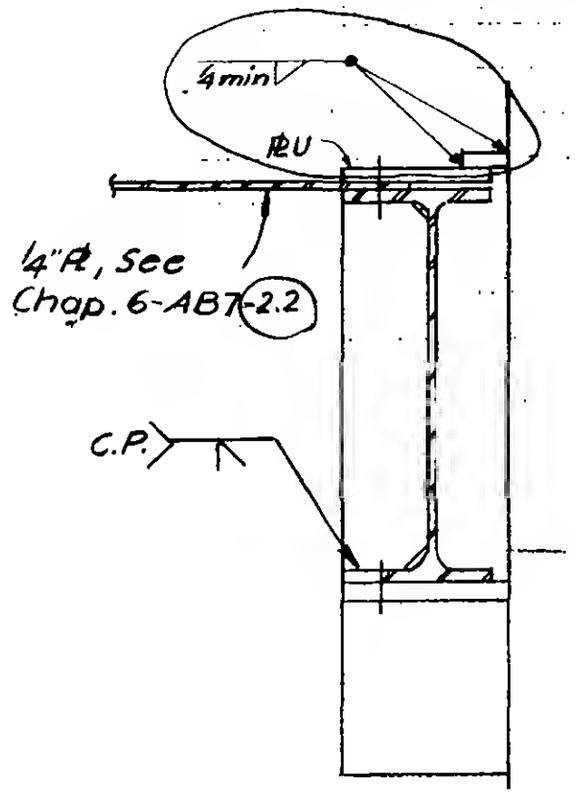

Section a'-a'

6-AB1-5.3