SKILLING - HELLE - CHRISTIANSEN - ROBERTSON Structural & Civil Engineers

PROJECT THE WORLD TRADE CENTER | TITLE CONNECTION DETAIL 205Z | DATE 2-9-68

REVISIONS

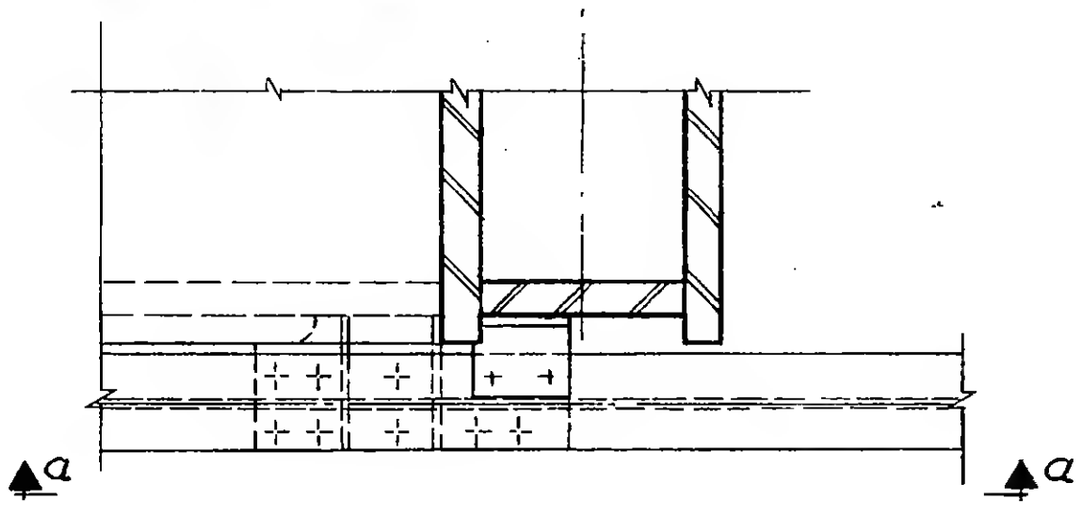

Plan

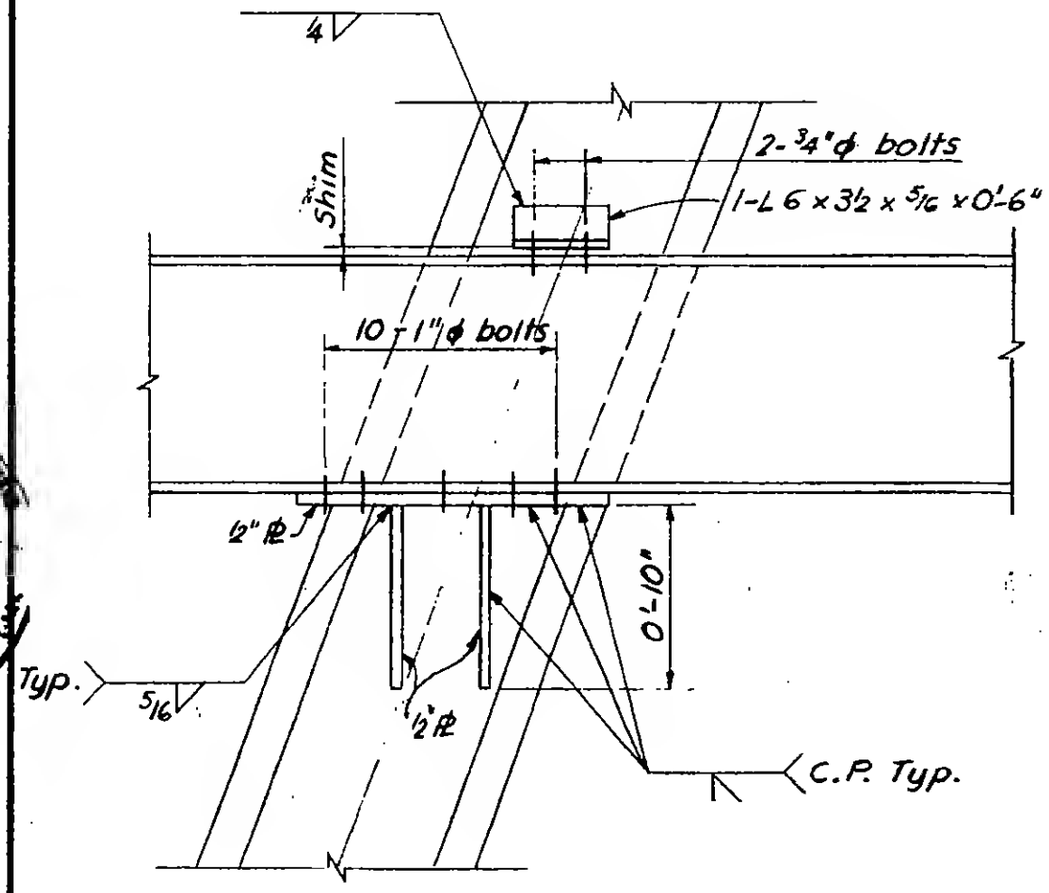

Section a-a

LESLIE E. ROBERTS
LICENSED PROFESSIONAL ENGINEER
No. 34360
UNIVERSITY OF THE STATE OF NEW YORK

6-AB1-9.10