WORTHINGTON, SKILLING, HELLE & JACKSON, Civil & Structural Engineers

PROJECT THE WORLD TRADE CENTER | TITLE CONNECTION DETAIL 208 A | DATE 5-9-67

REVISIONS

6-30-67

7-28-67

9-15-67

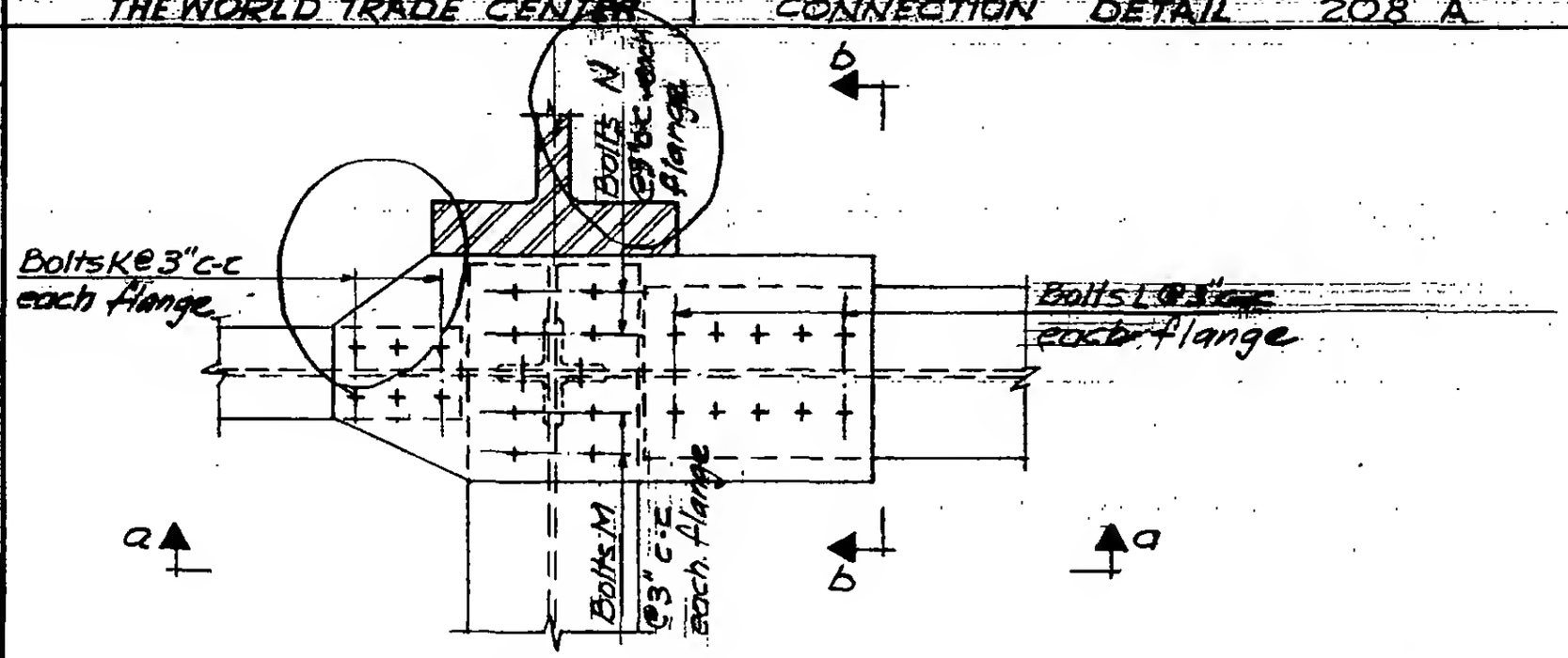

Plan

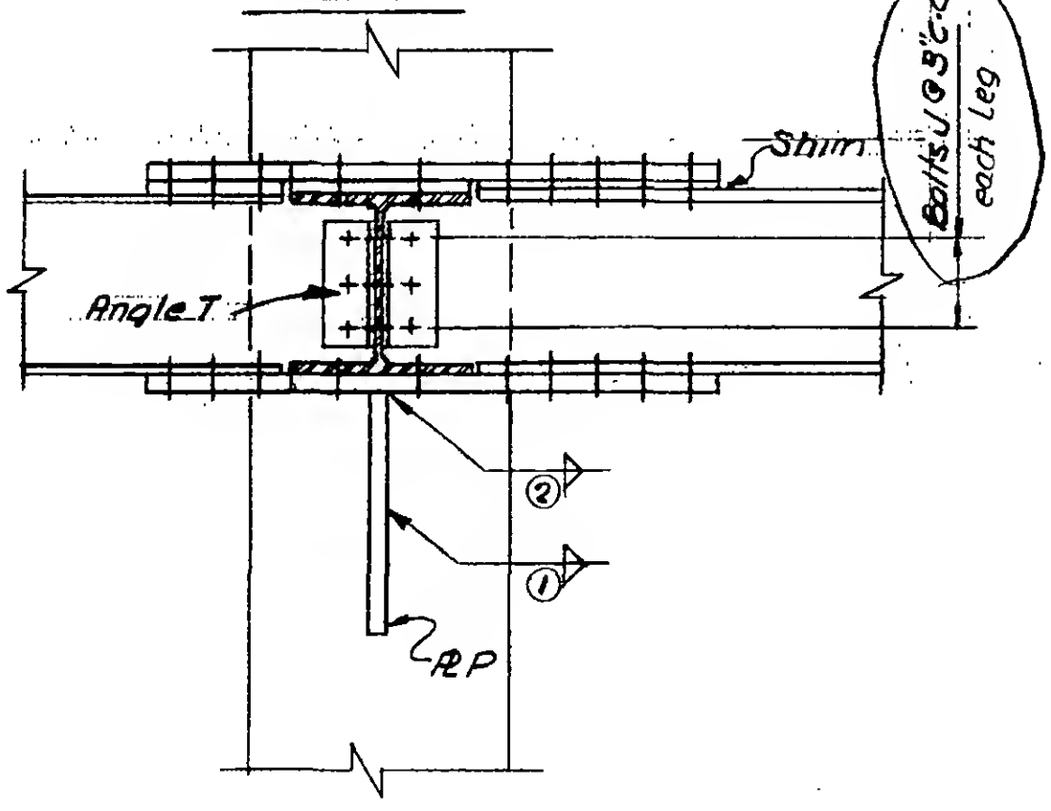

Section a-a

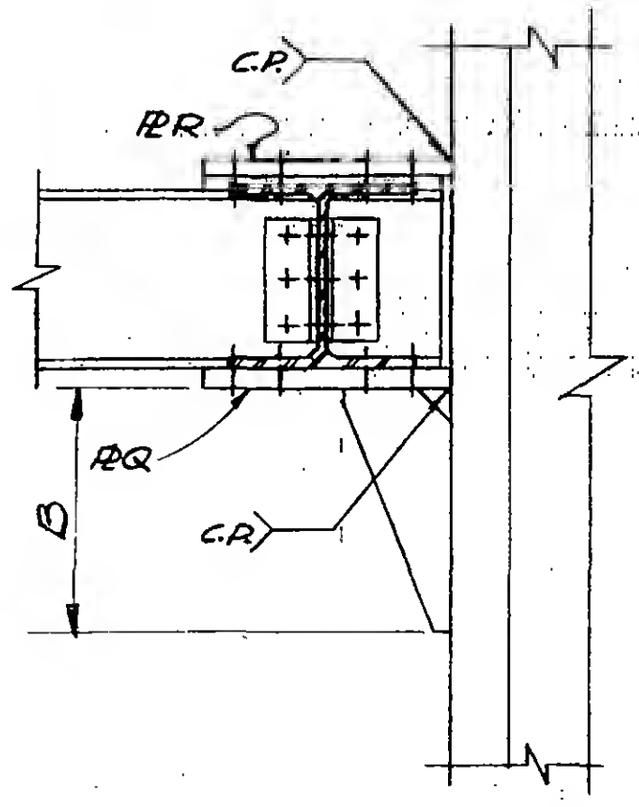

Section b-b

LICENSED PROFESSIONAL ENGINEER
LESLIE E. ROBERTSON
No. 34360
UNIVERSITY OF THE STATE OF NEW YORK

6-ABI-13