WORTHINGTON, SKILLING, HELLE & JACKSON — Civil & Structural Engineers

PROJECT	TITLE	DATE
THE WORLD TRADE CENTER	CONNECTION DETAIL 20B C	5-9-67

REVISIONS

7-28-67
9-15-67

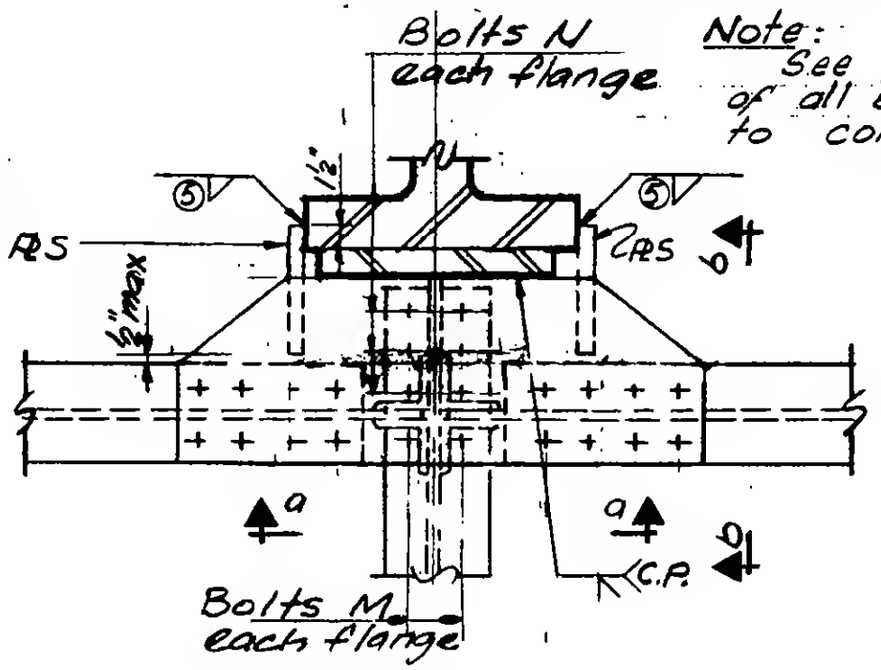

Note: See plan for location of all beam ℄'s relative to column ℄.

Plan

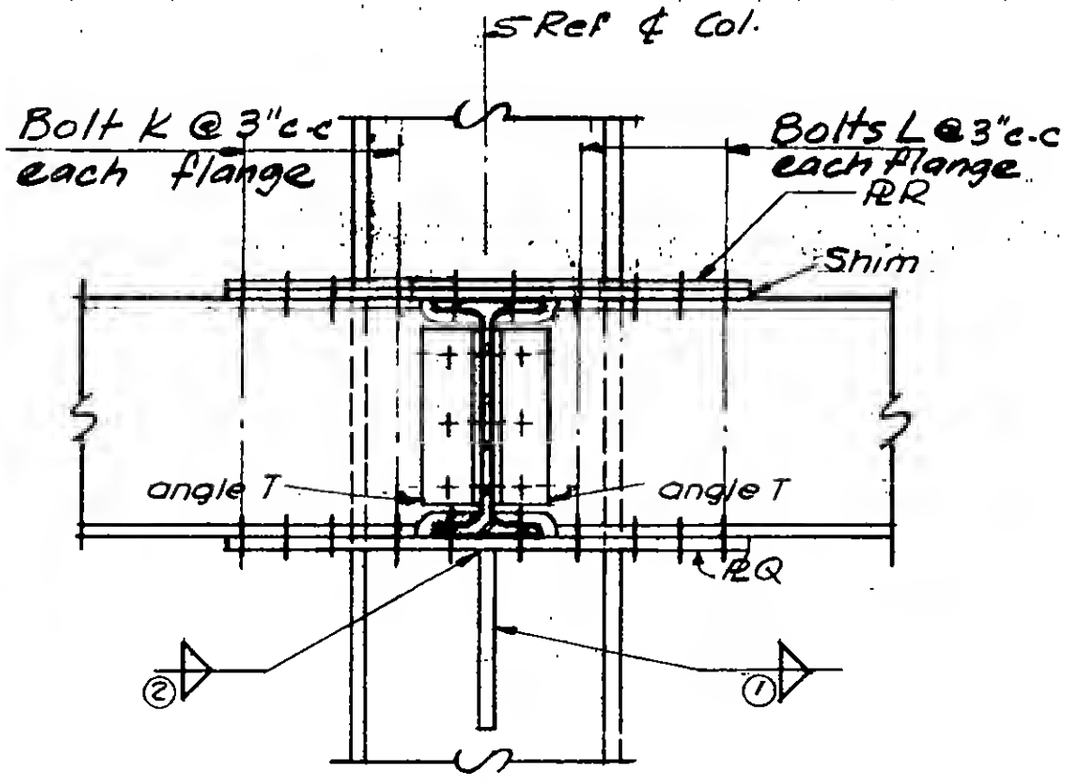

Section a-a

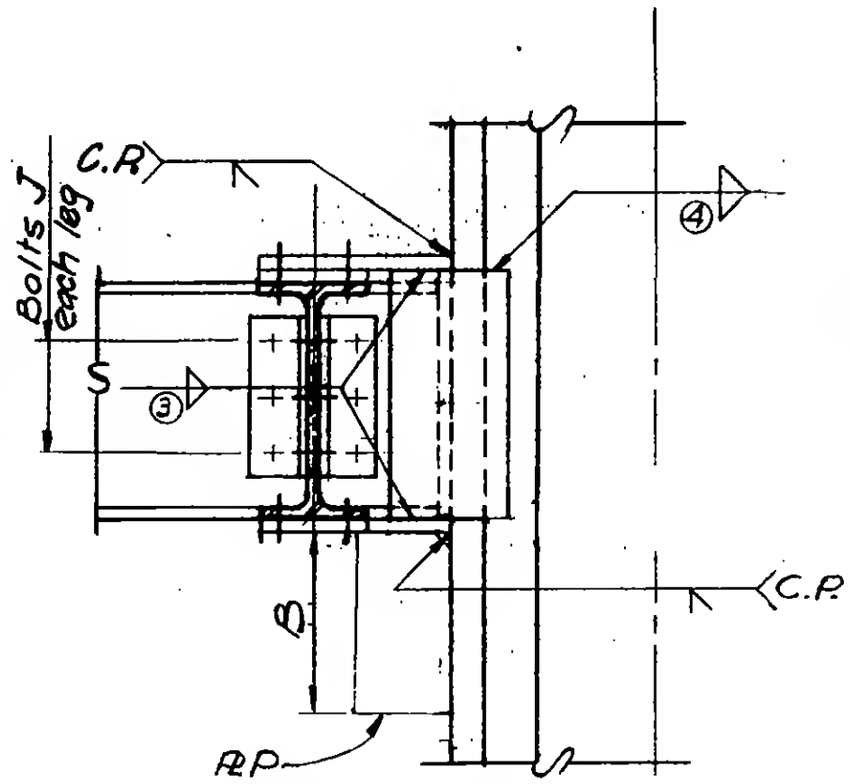

Section b-b

6-ABI-13.3

LICENSED PROFESSIONAL ENGINEER
LESLIE E. ROBERTSON
No. 34360
UNIVERSITY OF THE STATE OF NEW YORK