SKILLING - HELLE - CHRISTIANSEN - ROBERTSON — Structural & Civil Engineers

PROJECT THE WORLD TRADE CENTER | TITLE CONNECTION DETAIL 208 I | DATE 10-5-67

REVISIONS

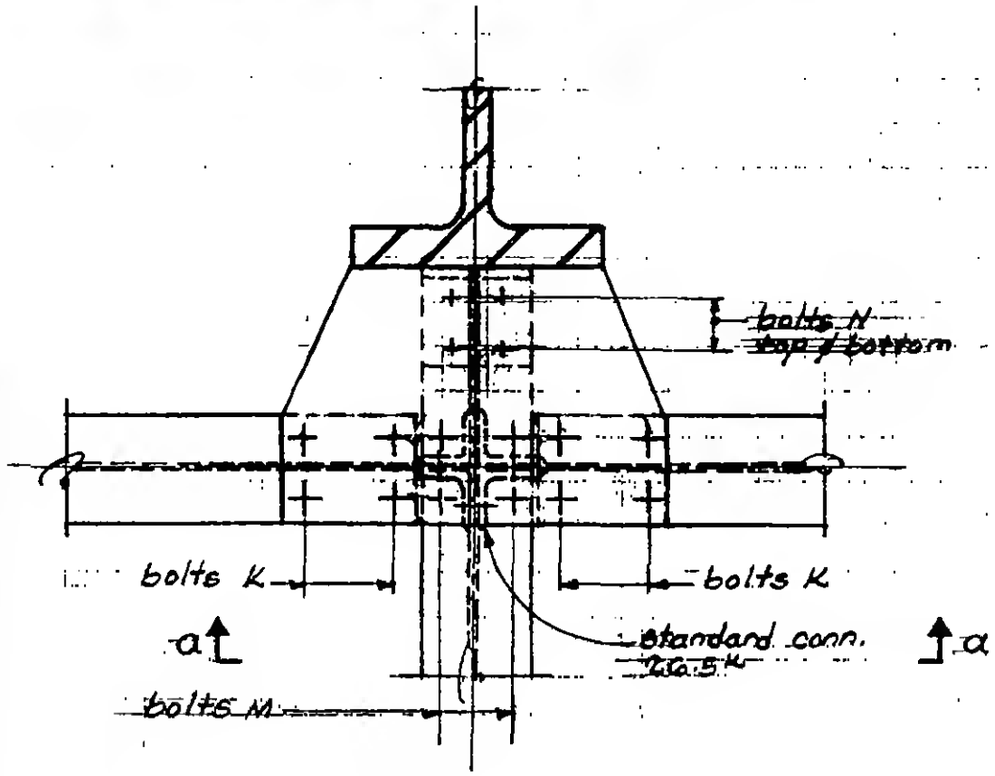

PLAN

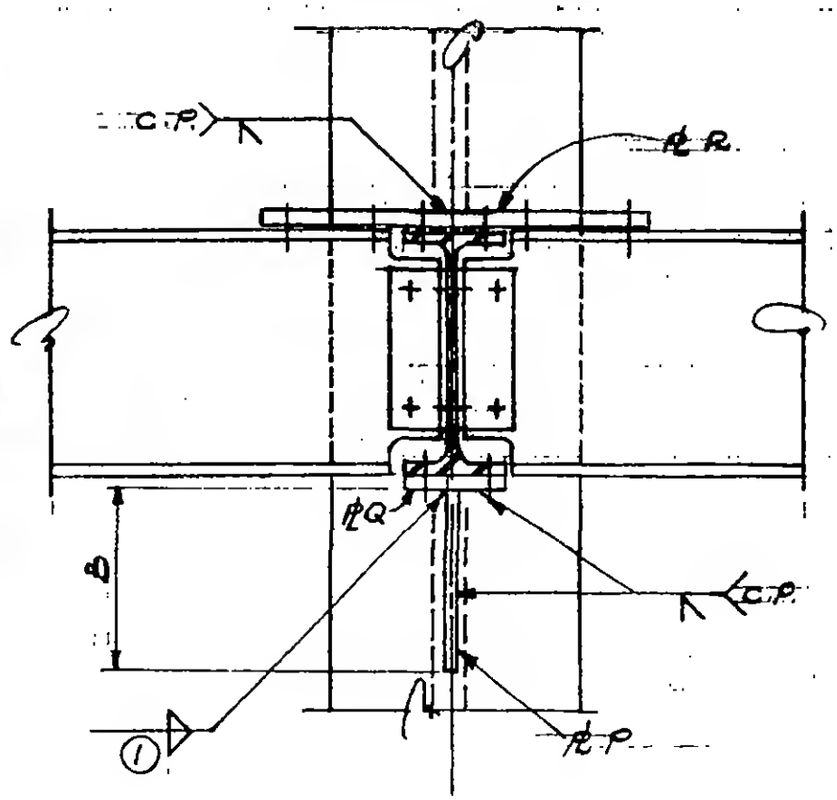

Section a-a

LESLIE E. ROBERTSON
No. 34360
UNIVERSITY OF THE STATE OF NEW YORK

G-AB1-13.5