WORTHINGTON, SKILLING, HELLE & JACKSON — Civil & Structural Engineers

PROJECT: THE WORLD TRADE CENTER | TITLE: CONNECTION DETAL 218A | DATE: 6-5-67

REVISIONS

8-14-67

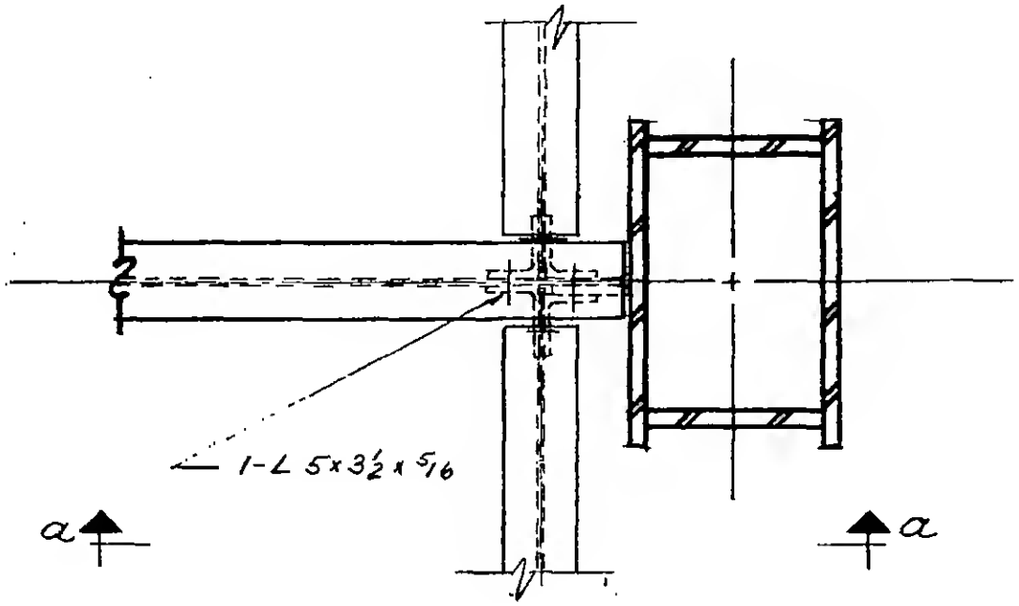

Plan

All L's 4x3½x5/16 x0'-5½ except as noted.

All bolts ¾"ϕ except as noted.

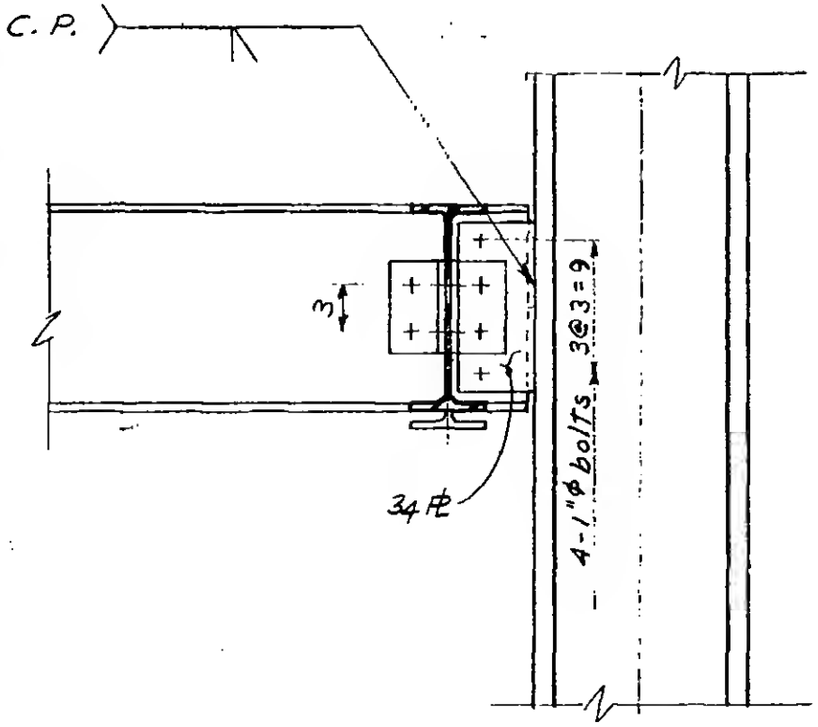

Section a-a

LICENSED PROFESSIONAL ENGINEER
LESLIE E. ROBERTSON
No. 34360
UNIVERSITY OF THE STATE OF NEW YORK

6-AB1-25