WORTHINGTON, SKILLING, HELLE & JACKSON — Civil & Structural Engineers

PROJECT: THE WORLD TRADE CENTER | TITLE: CONNECTION DETAIL 219 A-B | DATE: 6-5-67

REVISIONS

10-2-67

11-20-68

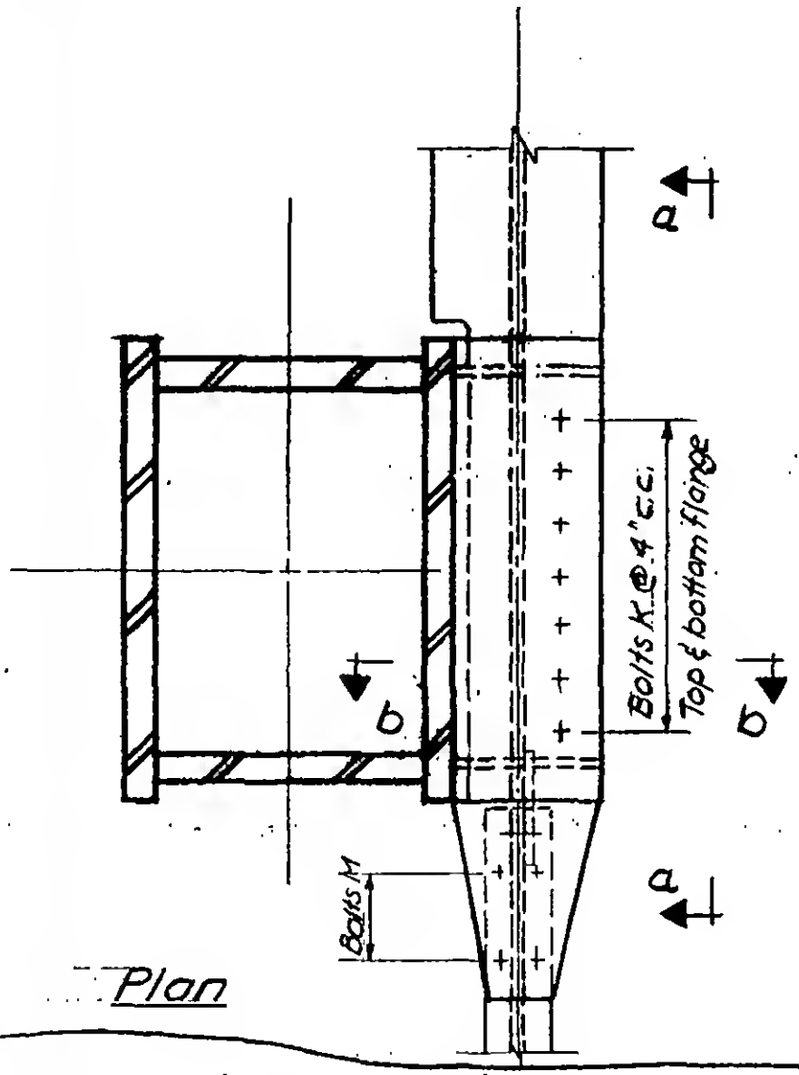

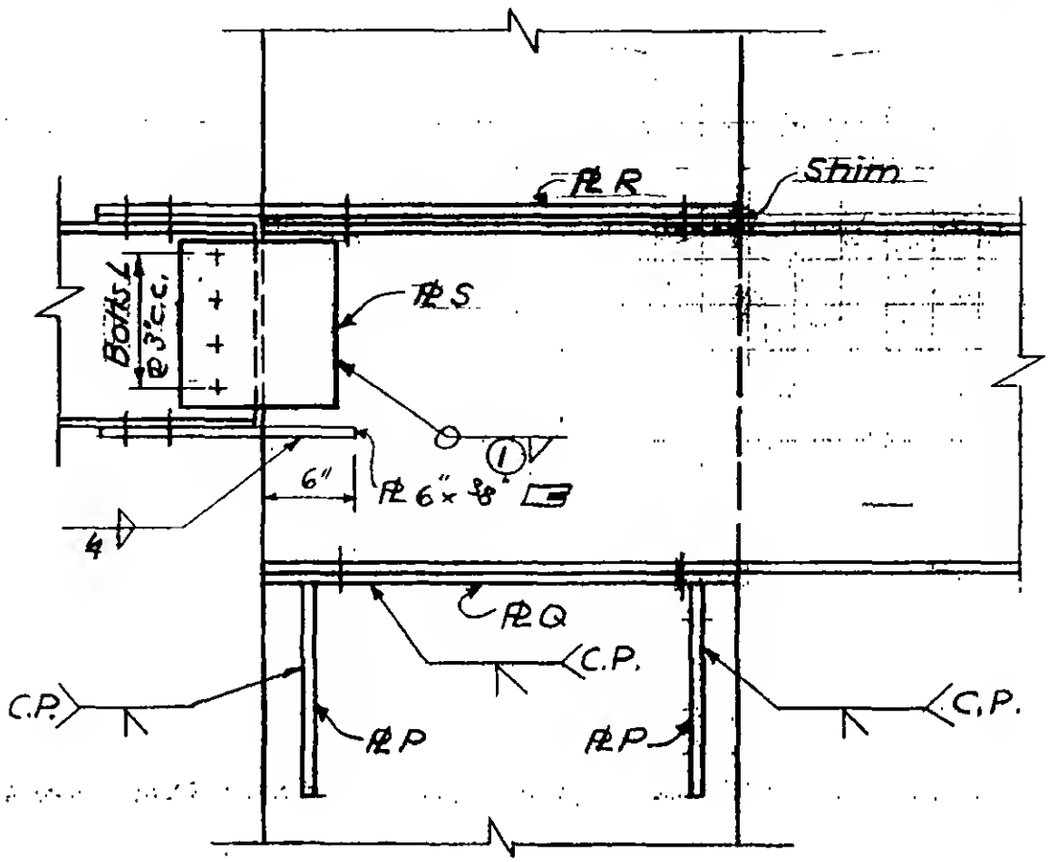

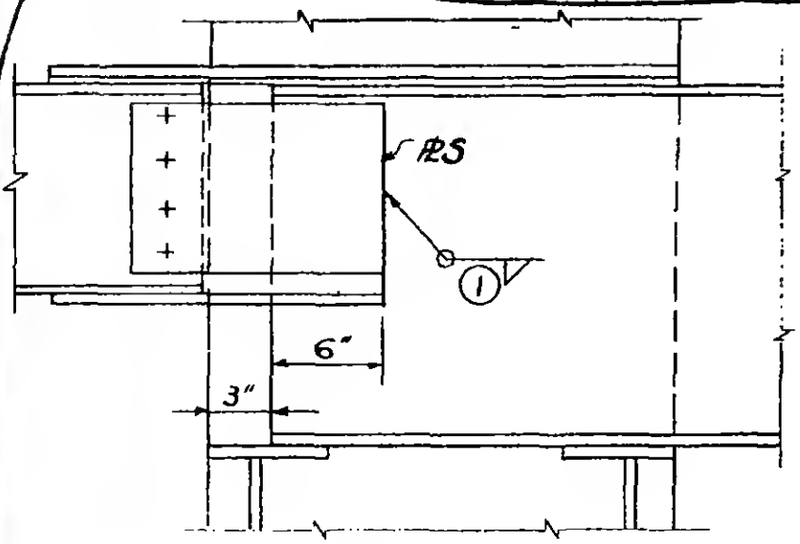

Section a-a

At Floor 75, Tower A, BM 5551 only

Details not shown are the same as shown in main Section a-a which is applicable to other floors.

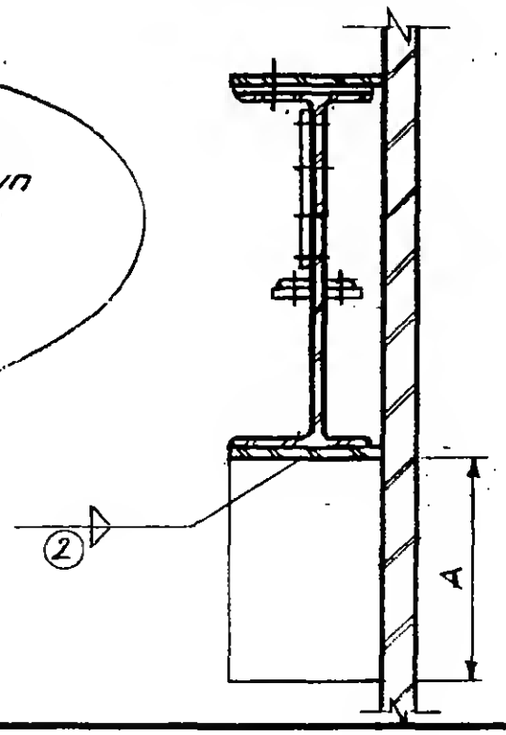

Section b-b

6-AB1-26

LICENSED PROFESSIONAL ENGINEER
LESLIE E. ROBERTSON
No. 34360
CITY OF THE STATE OF NEW YORK