SKILLING - HELLE - CHRISTIANSEN - ROBERTSON Structural & Civil Engineers

PROJECT THE WORLD TRADE CENTER | TITLE CONNECTION DETAIL 220R, V | DATE 10-2-67

REVISIONS

10-31-67

Detail 220 R & V : See 6-AB5-96 for bracing elevation

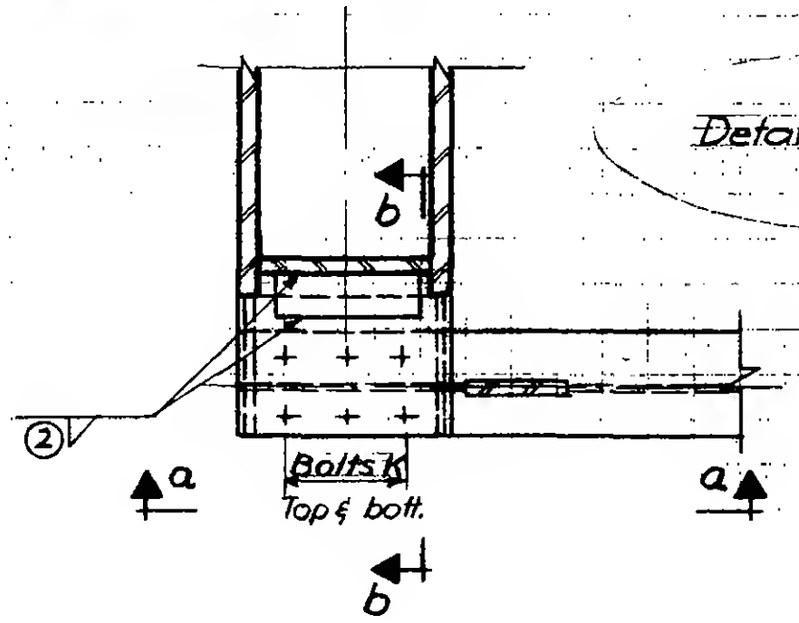

Plan

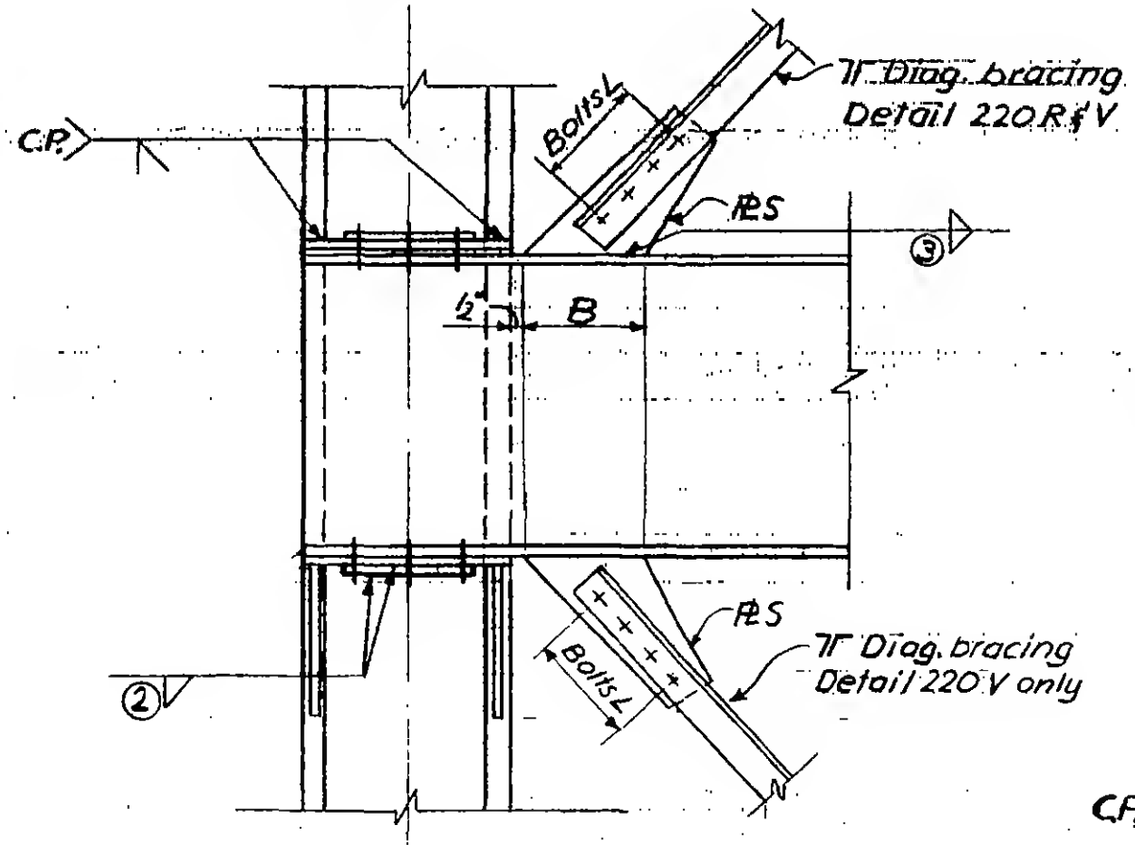

Section a-a

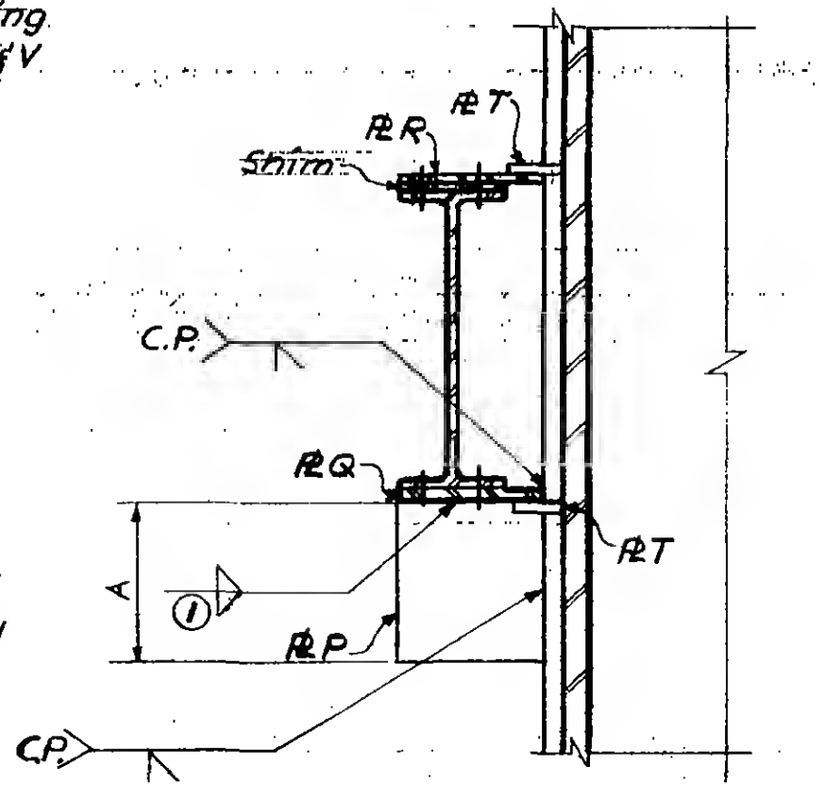

Section b-b

6-AB1-27.7

REGISTERED PROFESSIONAL ENGINEER
LESLIE E. ROBERTSON
No. 24980
STATE OF NEW YORK