SKILLING - HELLE - CHRISTIANSEN - ROBERTSON Structural & Civil Engineers

PROJECT THE WORLD TRADE CENTER | TITLE CONNECTION DETAIL 221A | DATE 6-5-67

REVISIONS

10-2-67

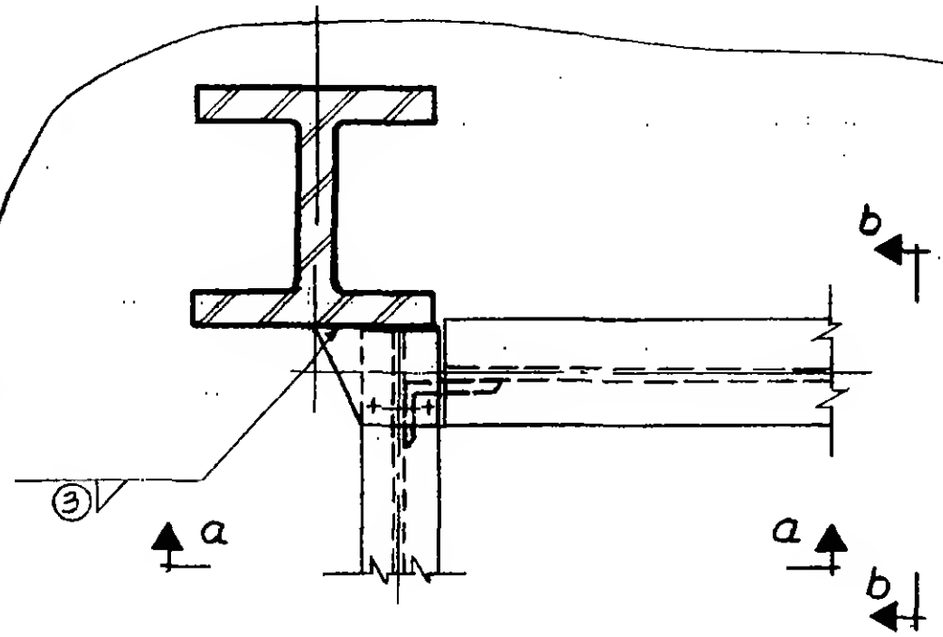

Plan

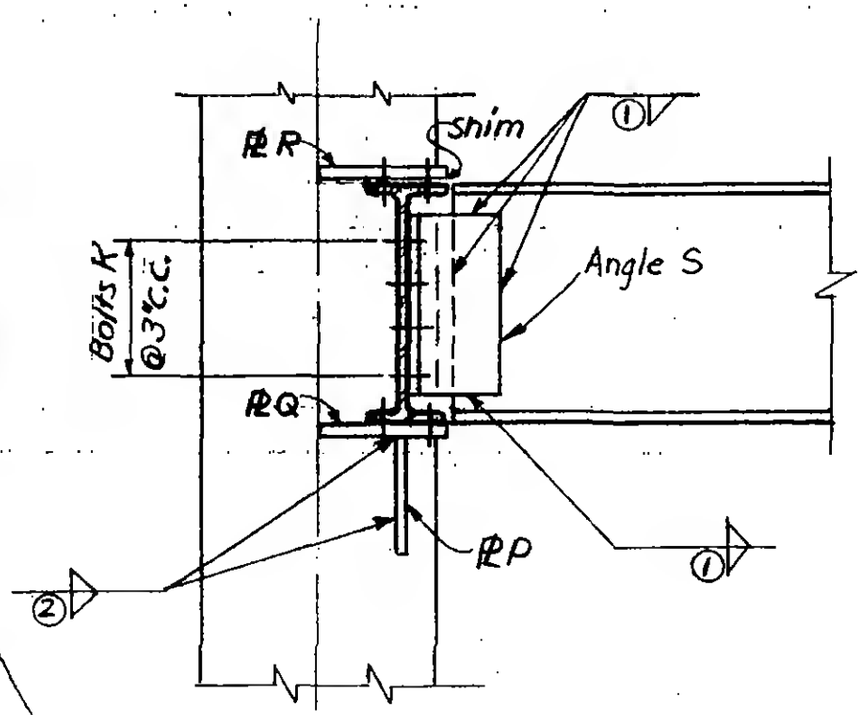

Section a-a

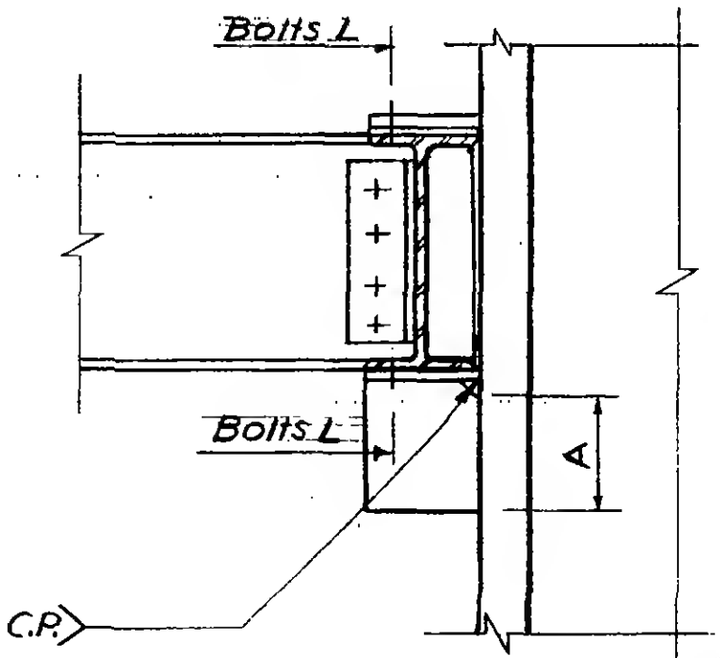

Section b-b

LESLIE E. ROBERTSON No. 34360 STATE OF NEW YORK

6-AB1-28