WORTHINGTON, SKILLING, HELLE & JACKSON — Civil & Structural Engineers

PROJECT: THE WORLD TRADE CENTER | TITLE: CONNECTION DETAIL 224 A B & C | DATE: 6-30-67

REVISIONS

10-5-67

12-21-67

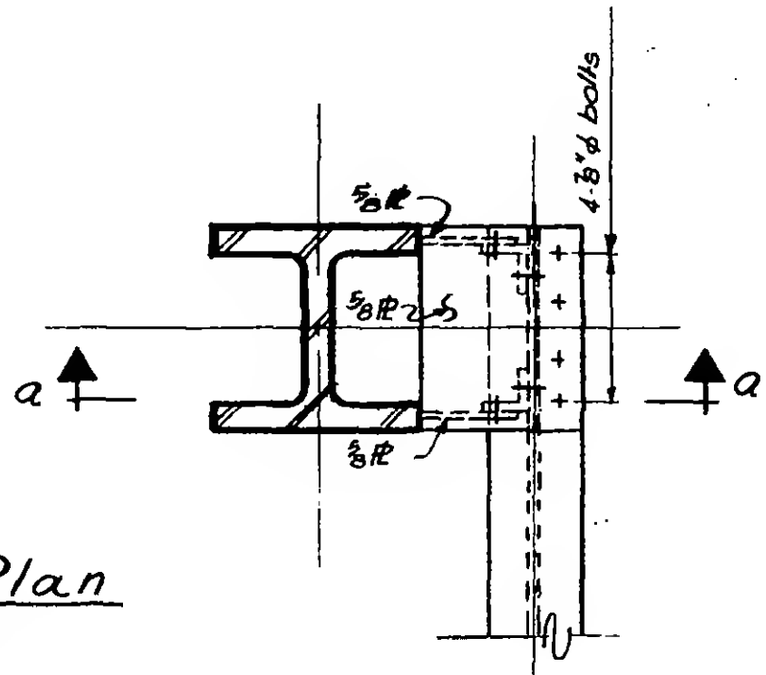

Plan

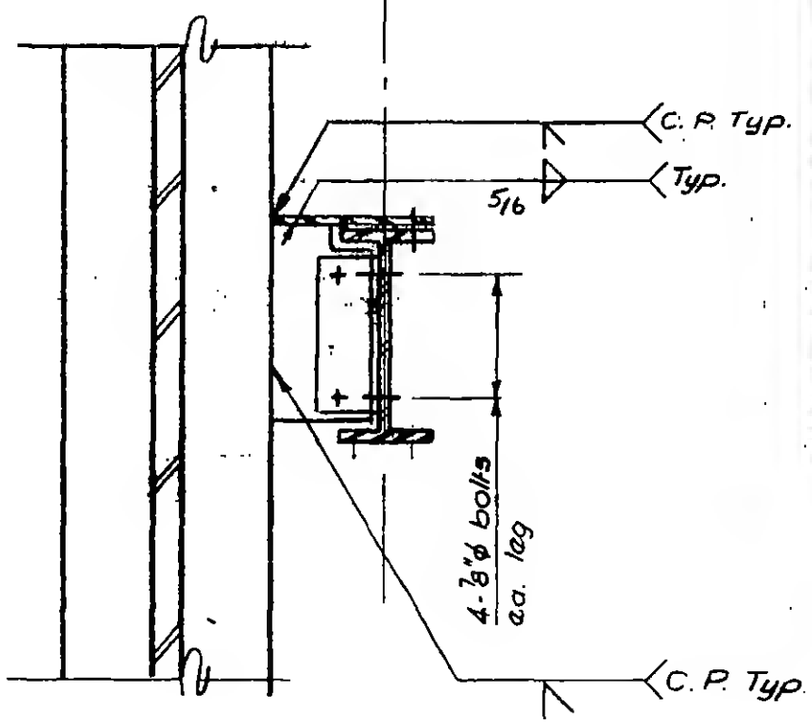

Section a-a

Detail 224 A

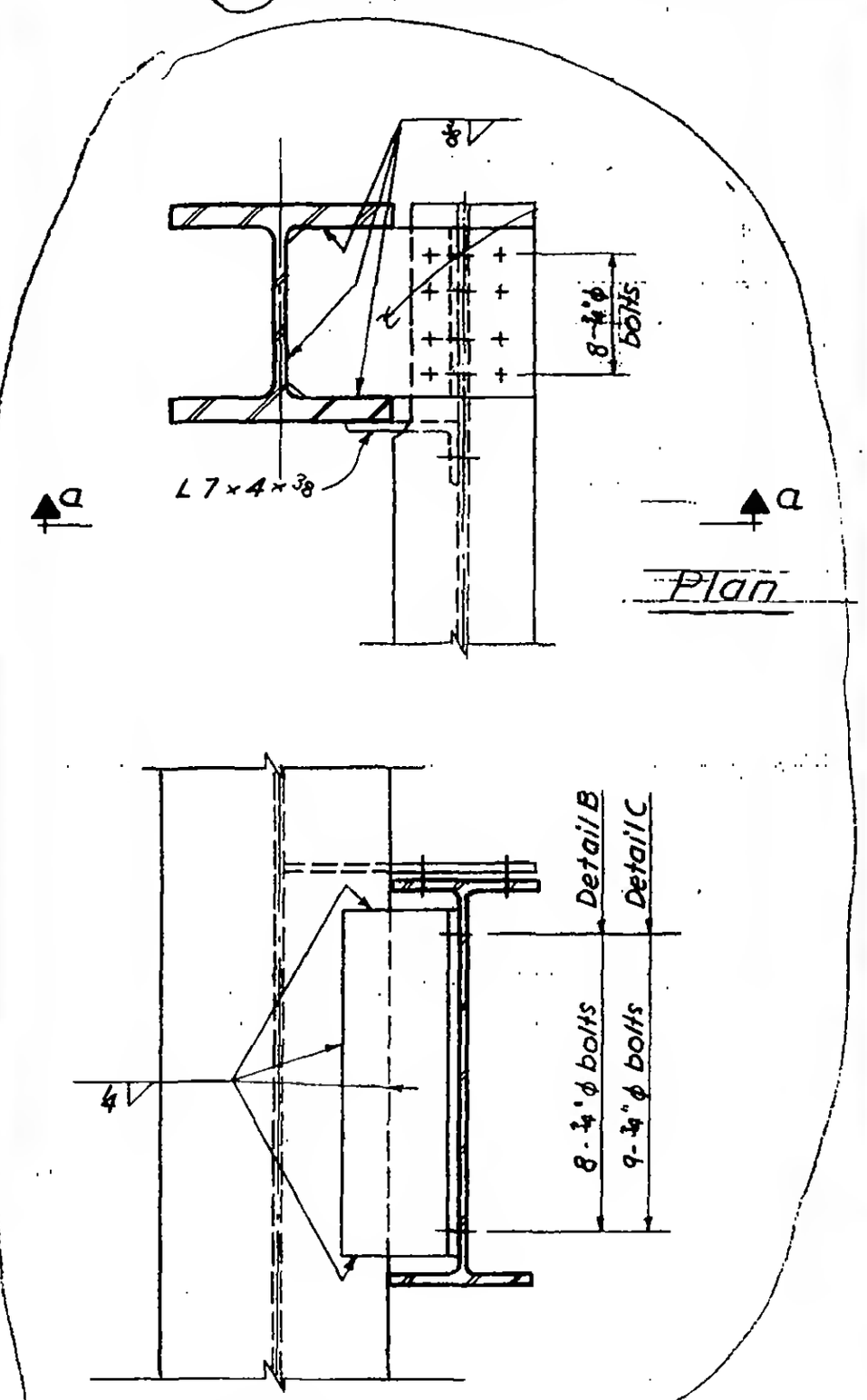

Section a-a

Detail 224 B & C

6-AB1-31

LICENSED PROFESSIONAL ENGINEER
LESLIE E. ROBERTSON
No. 34360
OF THE STATE OF NEW YORK