WORTHINGTON, SKILLING, HELLE & JACKSON — Civil & Structural Engineers

PROJECT: THE WORLD TRADE CENTER | TITLE: CONNECTION DETAIL 232 A, B & C | DATE: 5-1-67

REVISIONS
5-9-67
7-28-67
9-15-67
11-10-67
12-7-67

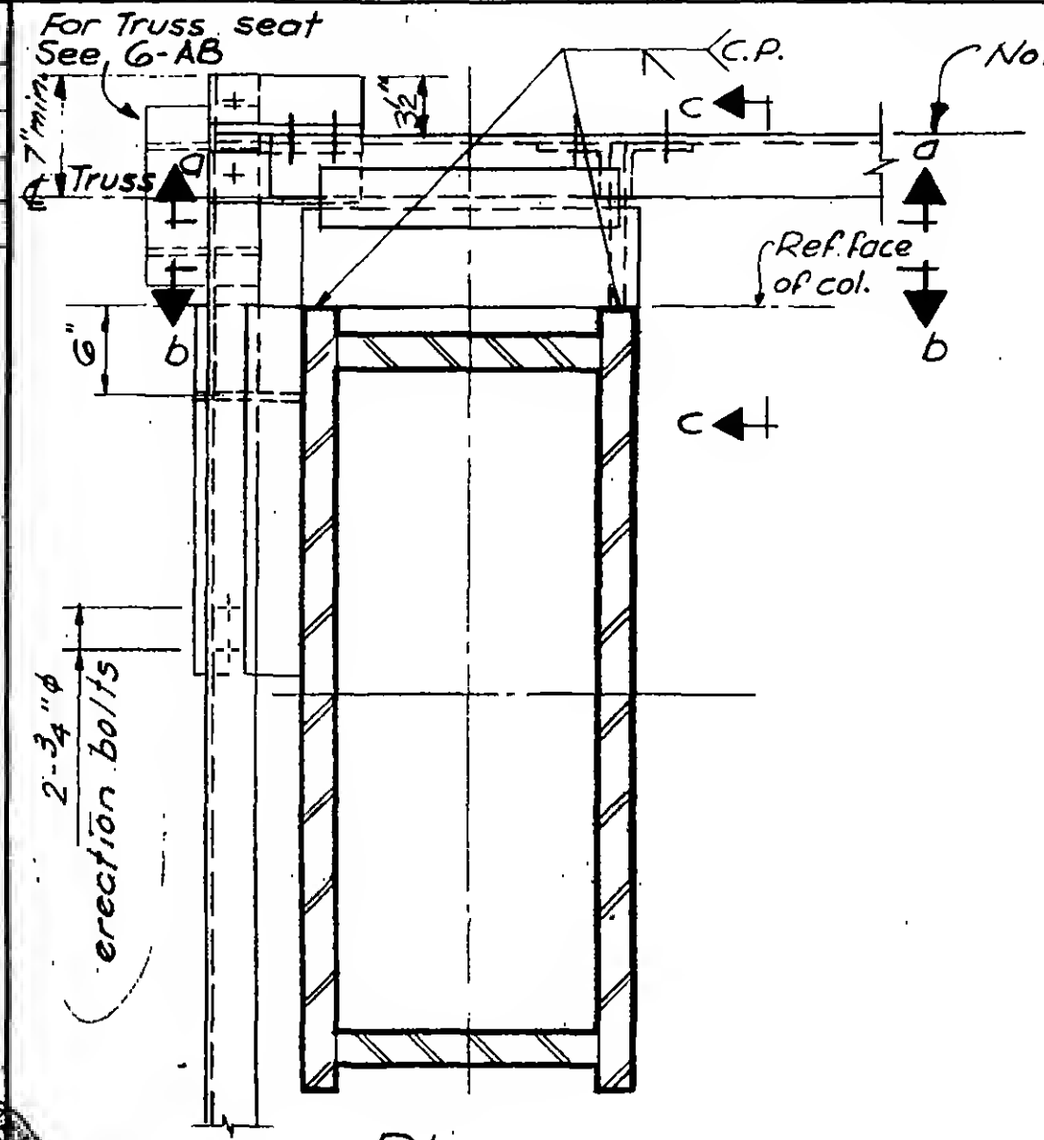

Plan

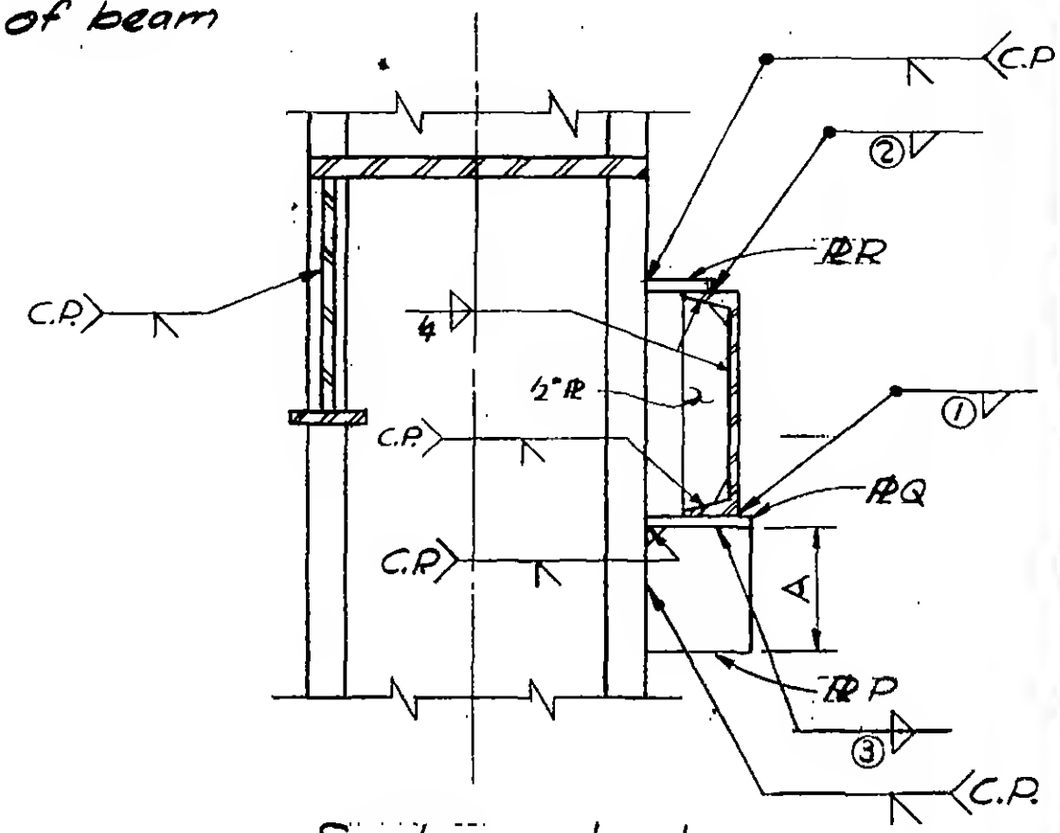

Section b-b

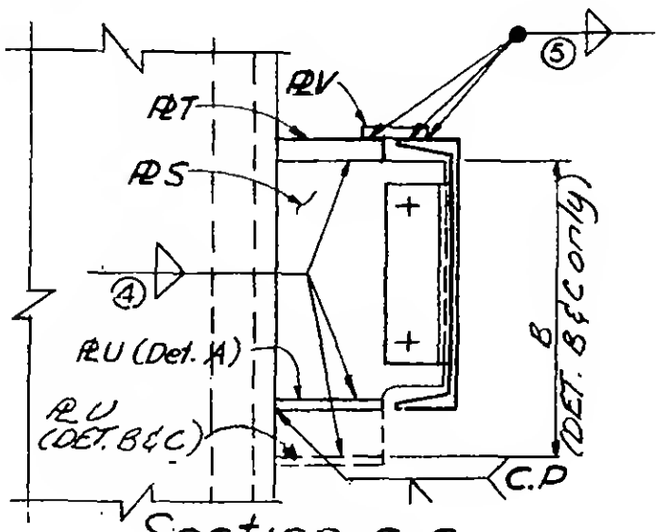

Section c-c

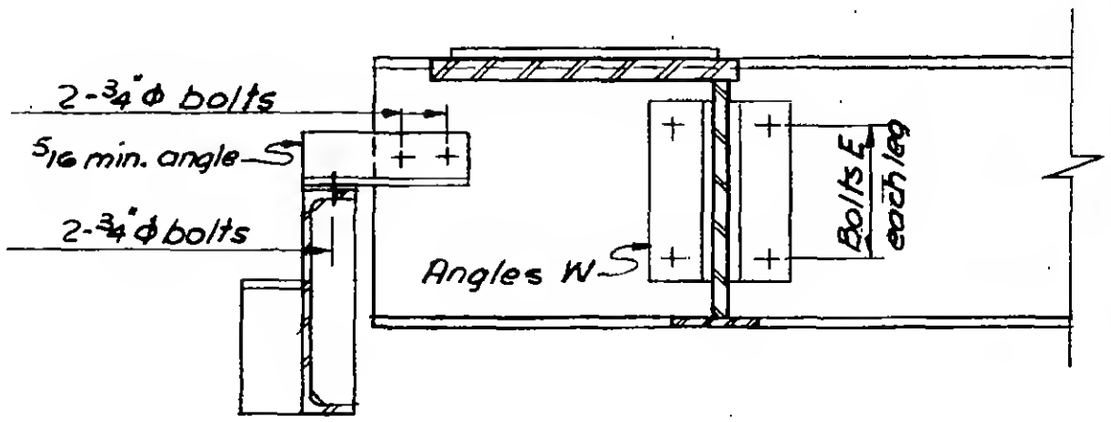

Section a-a

REGISTERED PROFESSIONAL ENGINEER
LEONARD S. ROSENTHAL
No. 34360
UNIVERSITY OF THE STATE OF NEW YORK

6-AB1-39