WORTHINGTON, SKILLING, HELLE & JACKSON — Civil & Structural Engineers

PROJECT: THE WORLD TRADE CENTER | TITLE: CONNECTION DETAIL 233 A | DATE: 5-1-67

REVISIONS

7-28-67

11-17-67

12-7-67

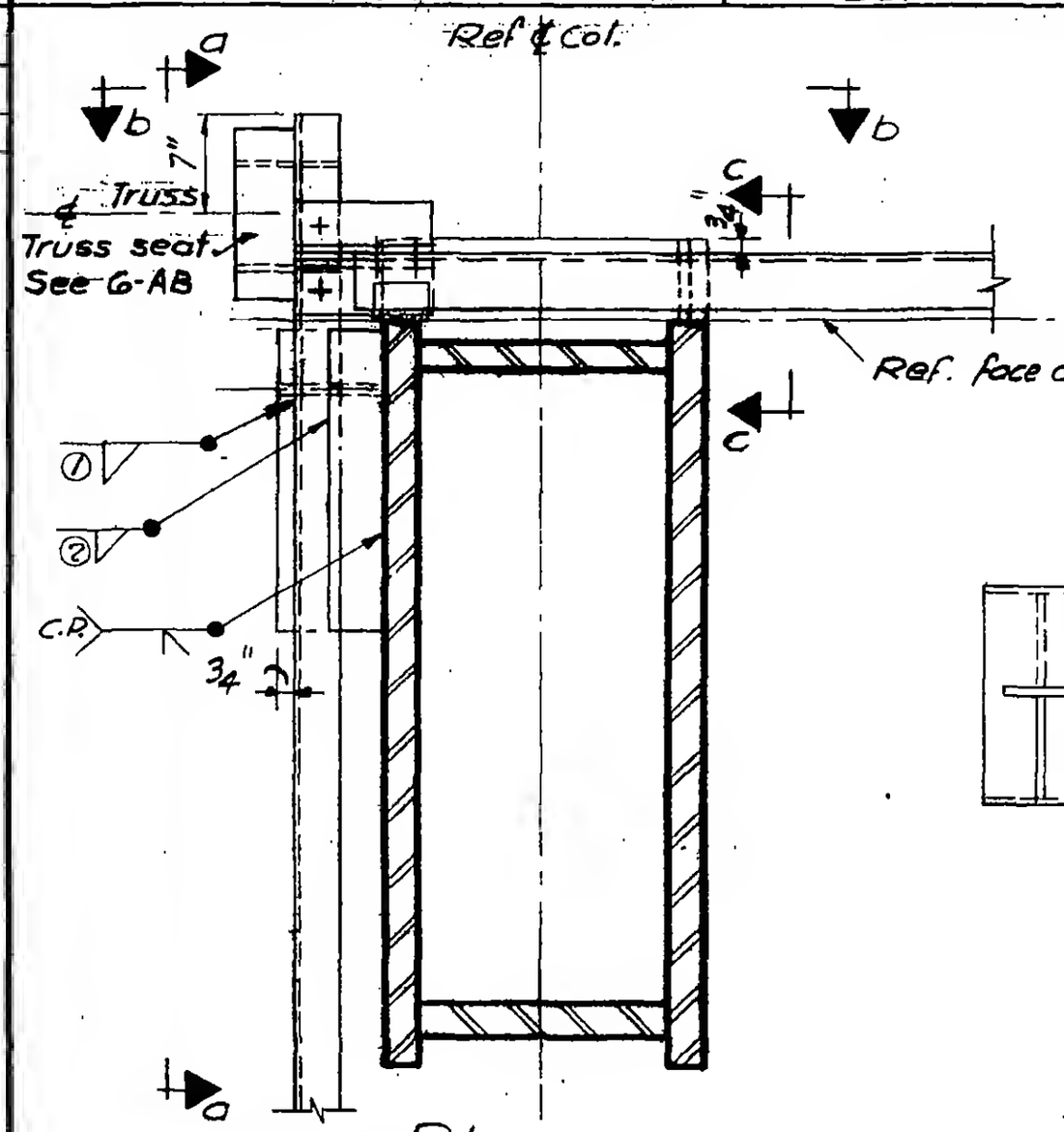

Plan

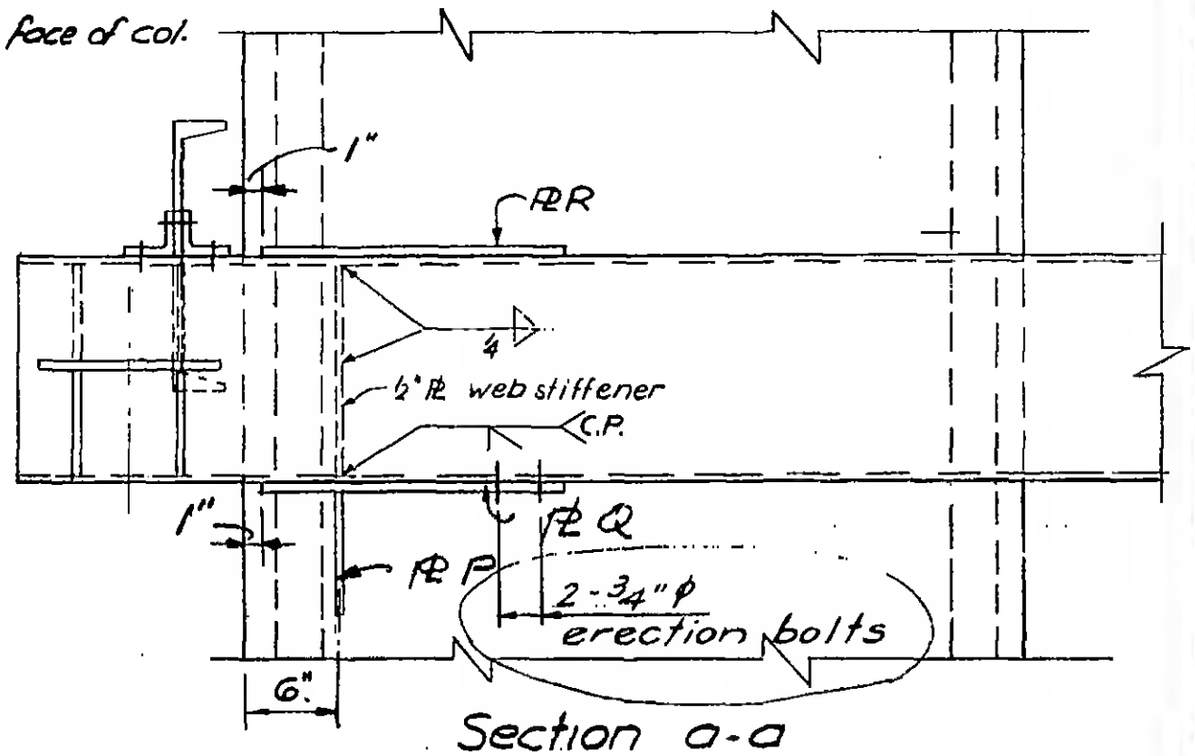

Section a-a

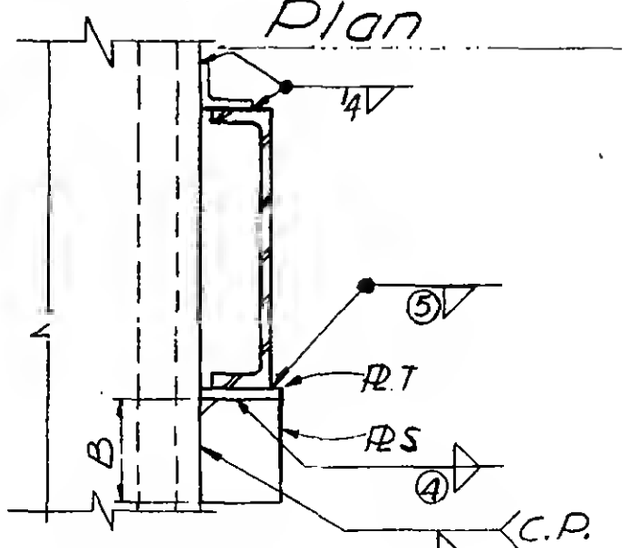

Section c-c

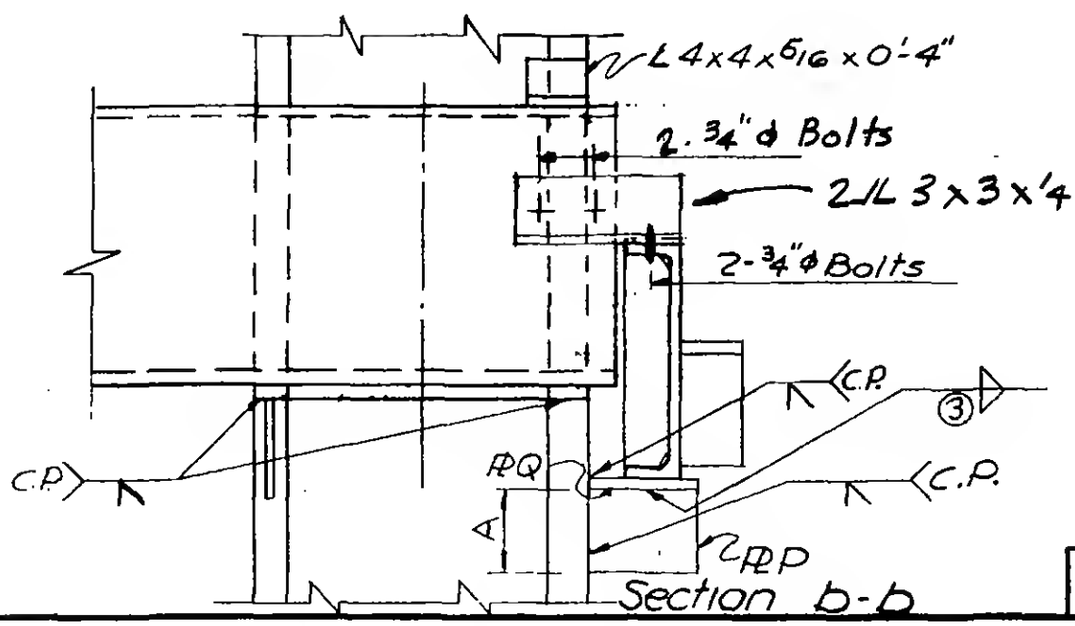

Section b-b

6-AB1-40

LICENSED PROFESSIONAL ENGINEER — LESLIE E. ROBERTSON — No. 24560 — STATE OF NEW YORK