SKILLING - HELLE - CHRISTIANSEN - ROBERTSON Structural & Civil Engineers

PROJECT THE WORLD TRADE CENTER | TITLE CONNECTION DETAIL 2nd DEE | DATE 8-14-67

REVISIONS
2-9-68

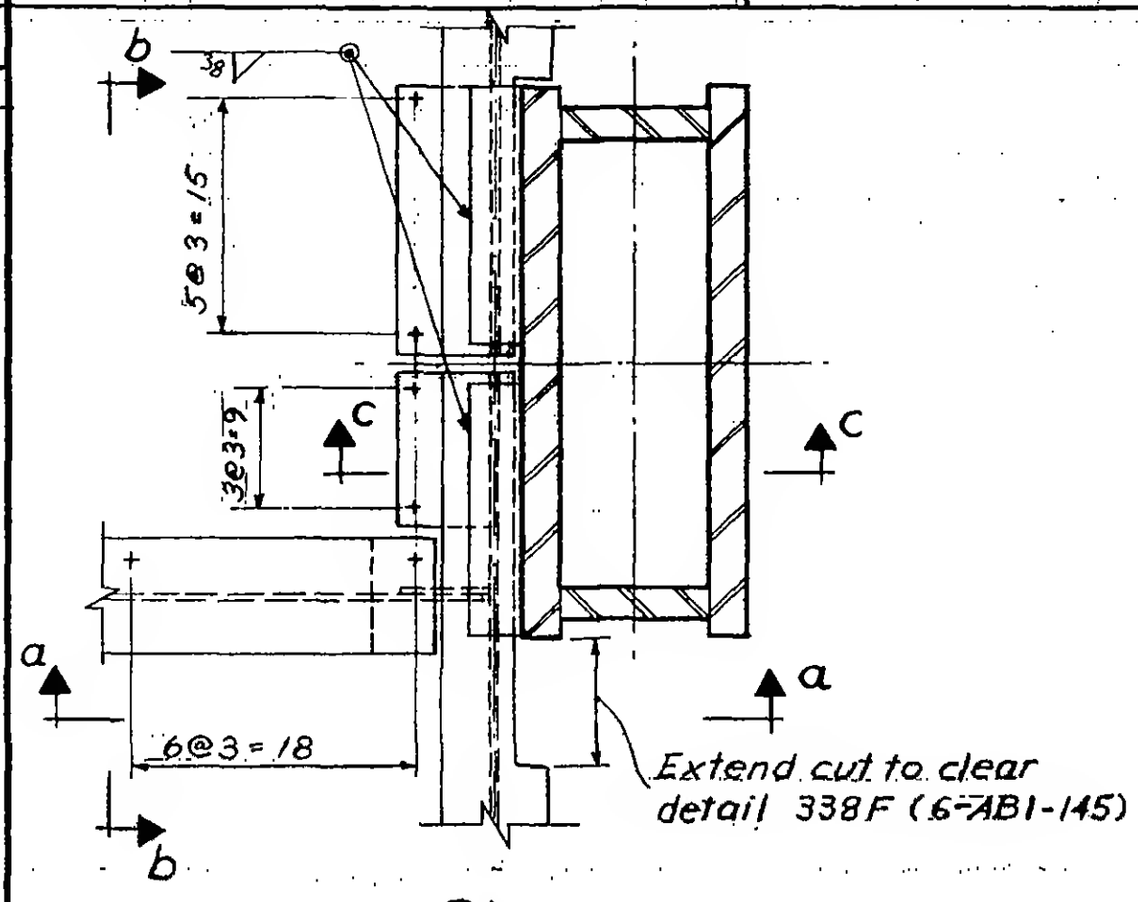

Plan

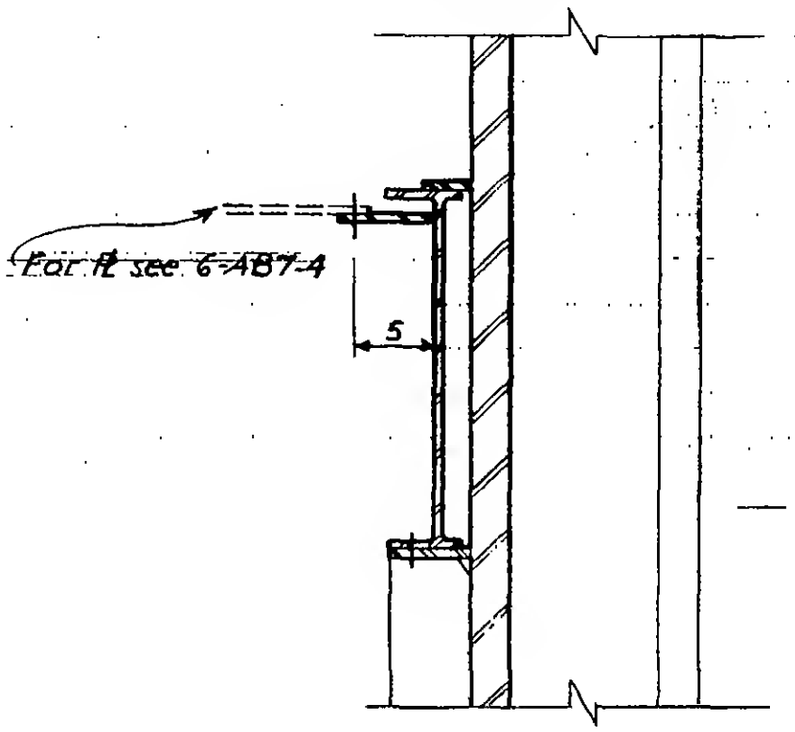

Section c-c

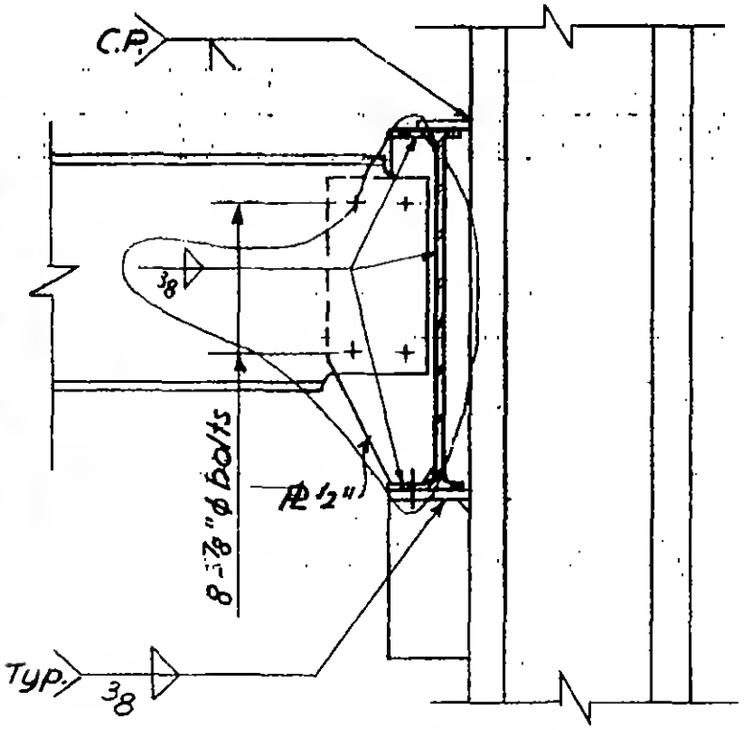

Section a-a

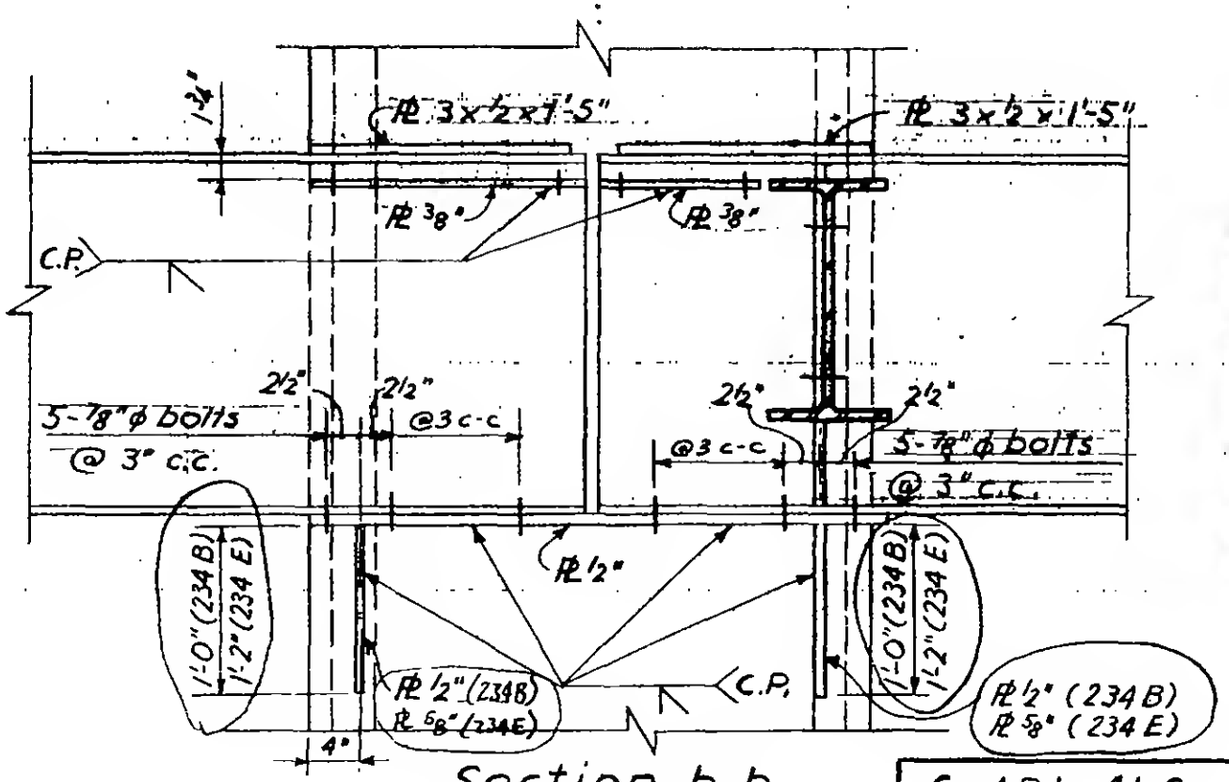

Section b-b

6-AB1-41.2

LICENSED PROFESSIONAL ENGINEER
LESLIE E. ROBERTSON
No. 34360
OF THE STATE OF NEW YORK