WORTHINGTON, SKILLING, HELLE & JACKSON — Civil & Structural Engineers

PROJECT: THE WORLD TRADE CENTER | TITLE: CONNECTION DETAIL 235 A-F | DATE: 5-1-67

REVISIONS
- 10-30-67
- 11-28-67
- 11-29-67
- 12-21-67

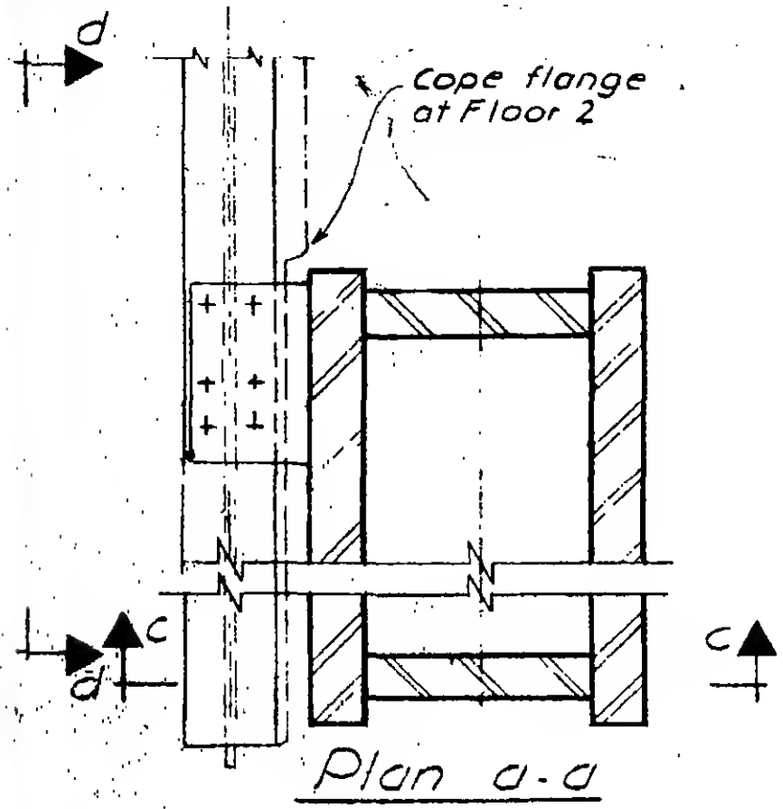

Plan a-a

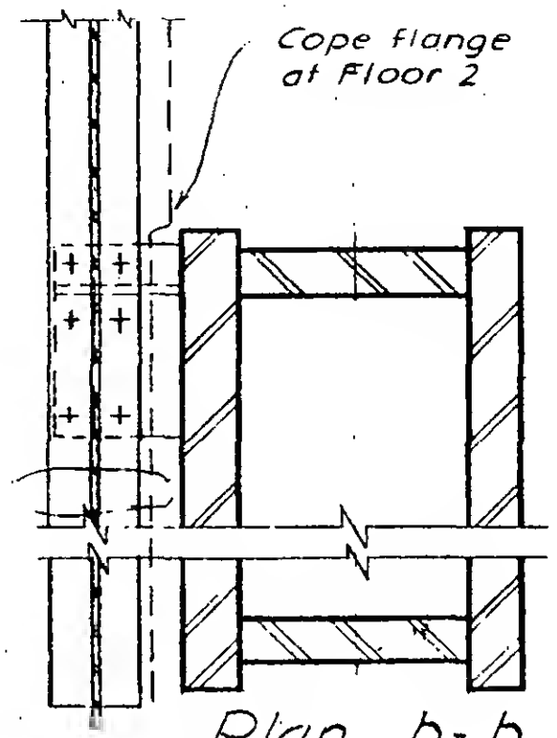

Plan b-b

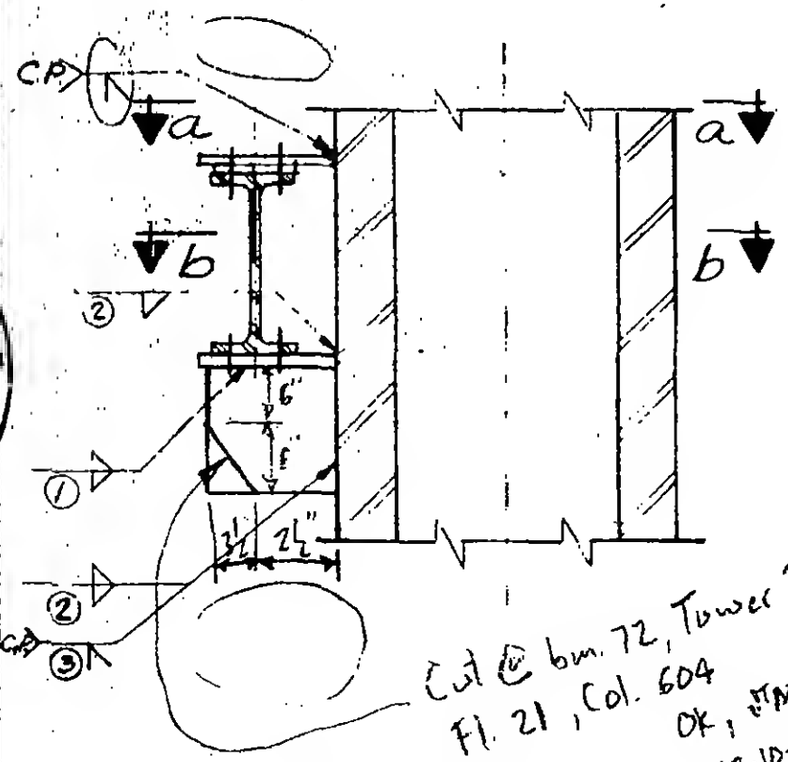

Cut @ bm. 72, Tower B, Fl. 21, Col. 604
OK, TM
12-10-74

Section c-c

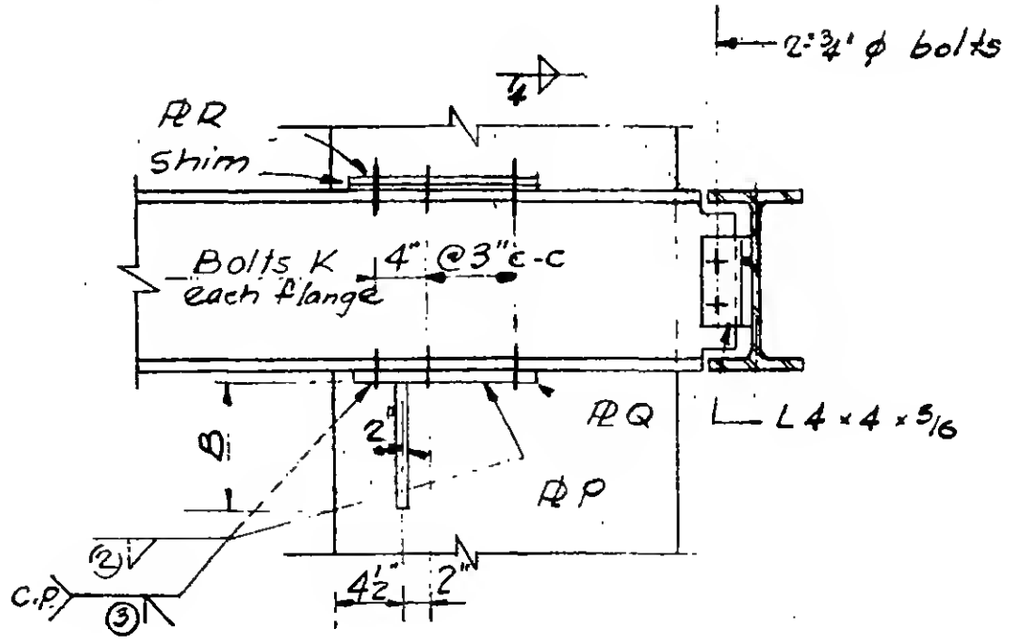

Section d-d

6-AB1-42