WORTHINGTON, SKILLING, HELLE & JACKSON — Civil & Structural Engineers

PROJECT: THE WORLD TRADE CENTER | TITLE: CONNECTION DETAIL 235 A-F. | DATE: 5-1-67

REVISIONS

6-30-67
7-28-67
9-29-67
12-21-67

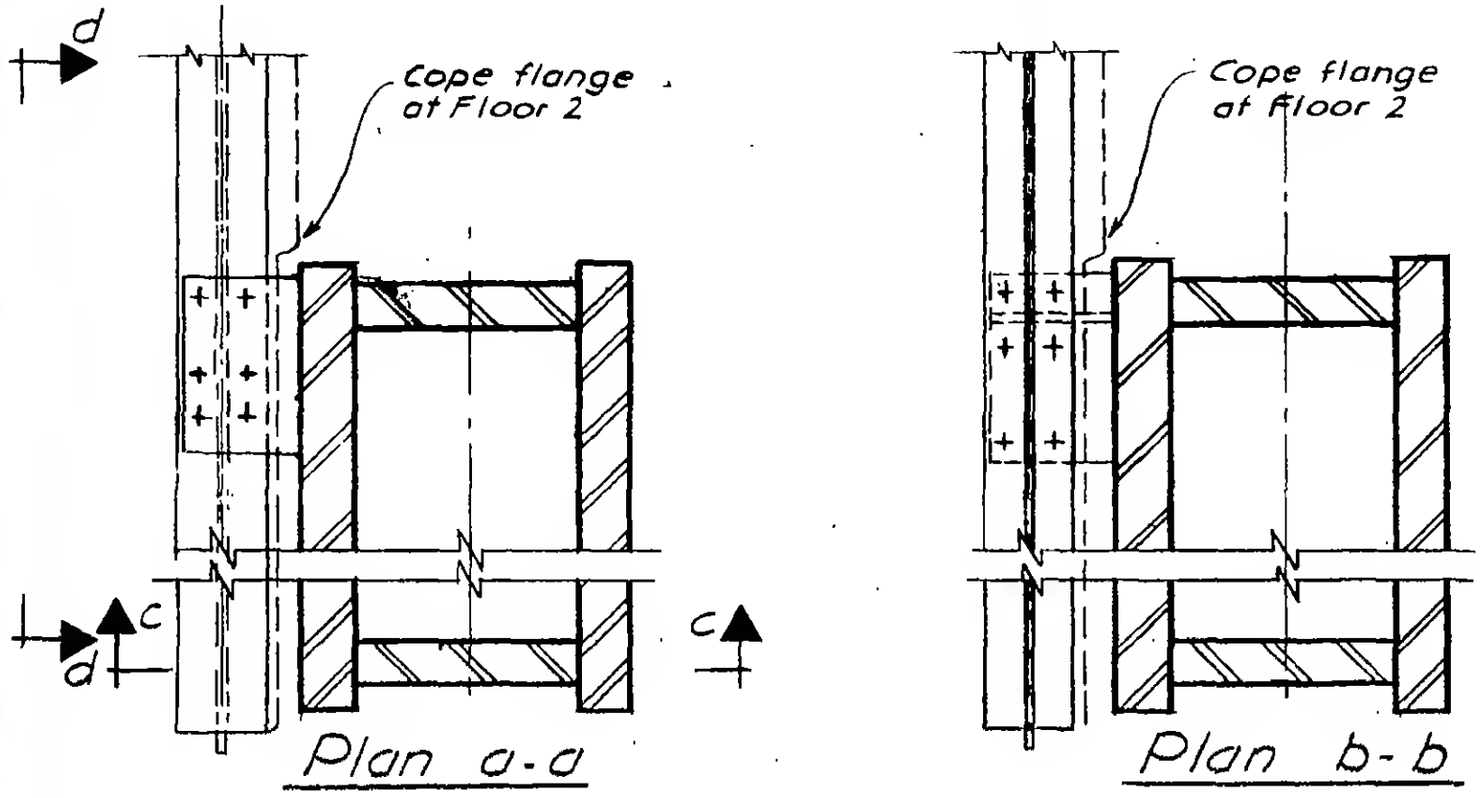

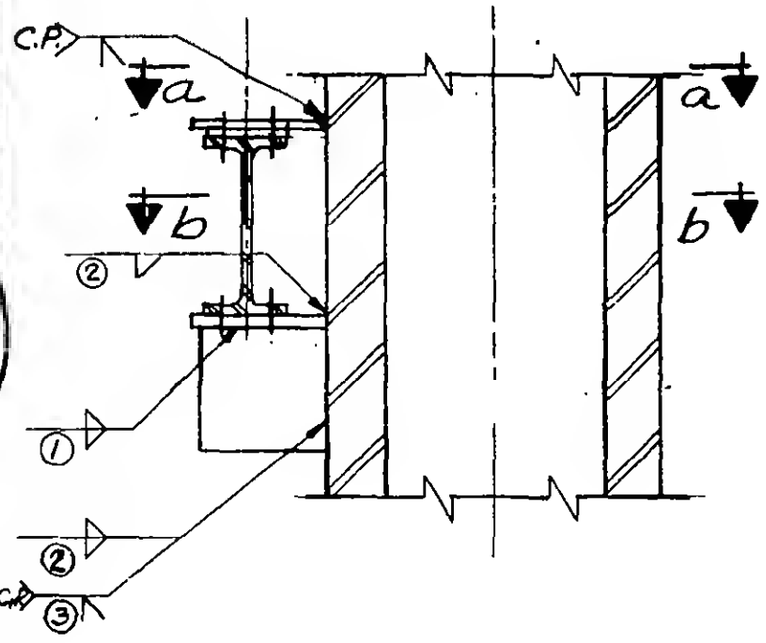

Section c-c

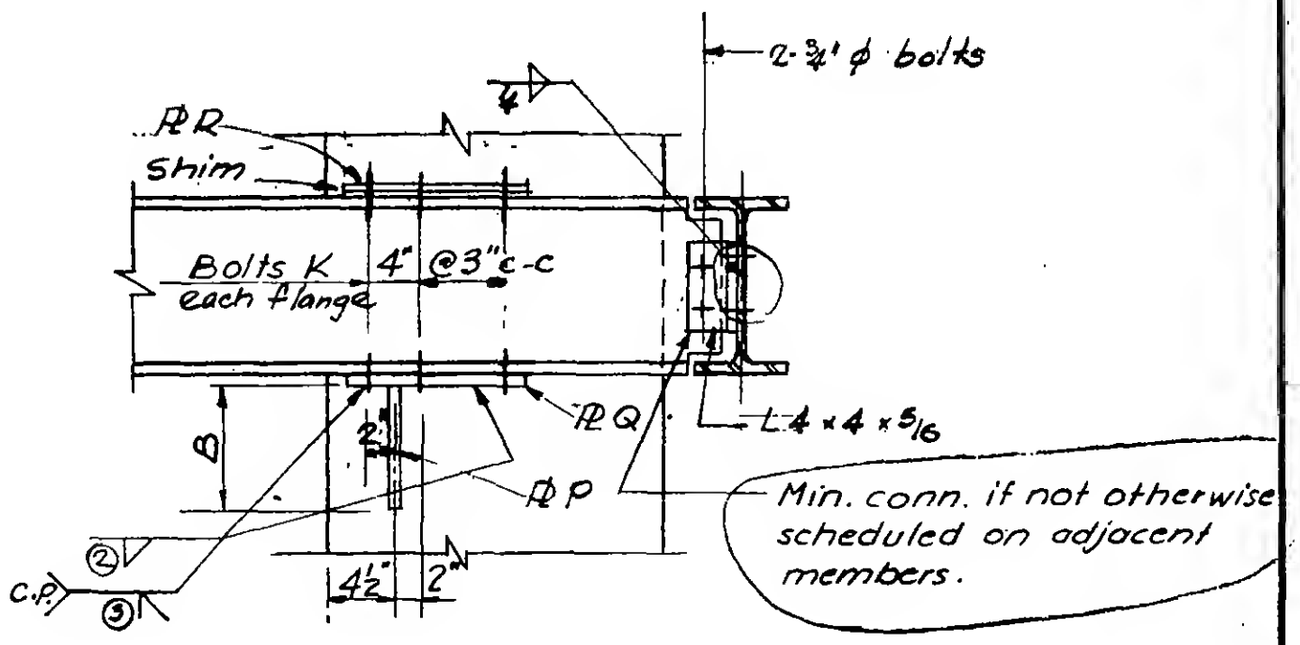

Section d-d

6-AB1-42