SKILLING - HELLE - CHRISTIANSEN - ROBERTSON — Structural & Civil Engineers

PROJECT THE WORLD TRADE CENTER | TITLE CONNECTION DETAIL 236A | DATE 6-30-67

REVISIONS
10-5-67

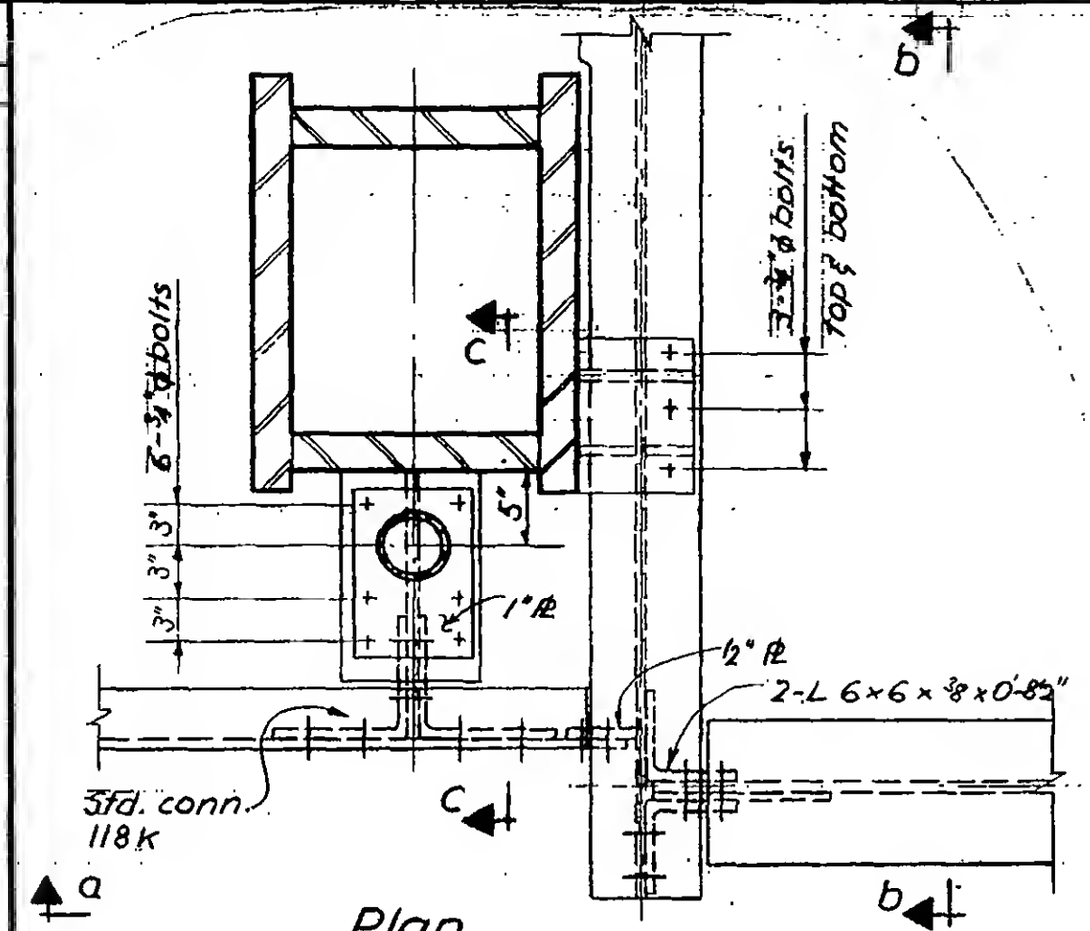

Plan

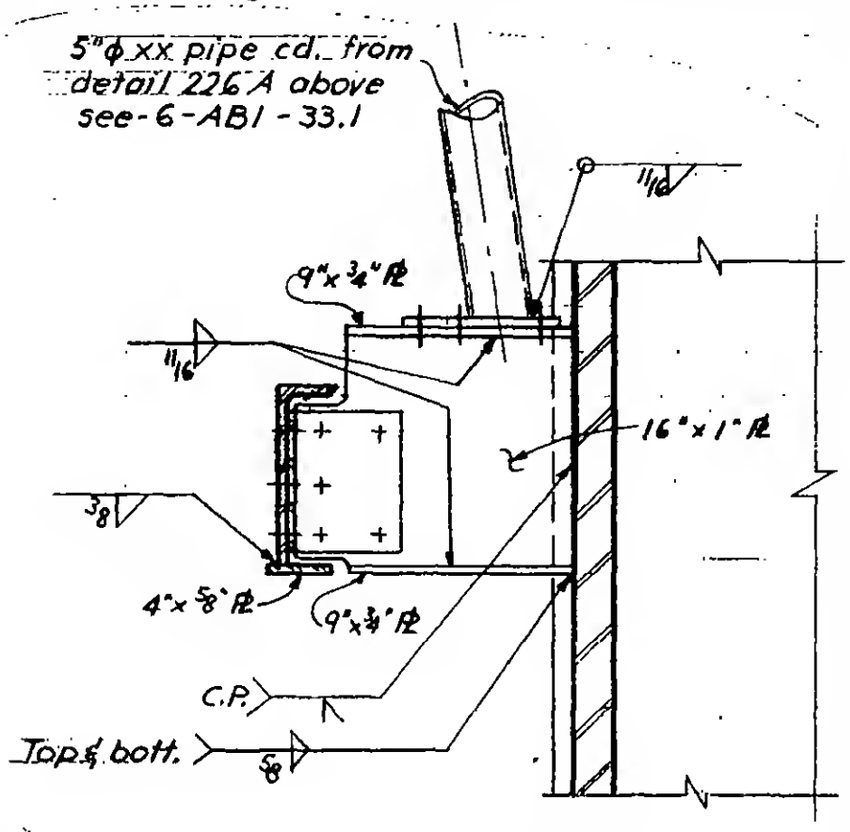

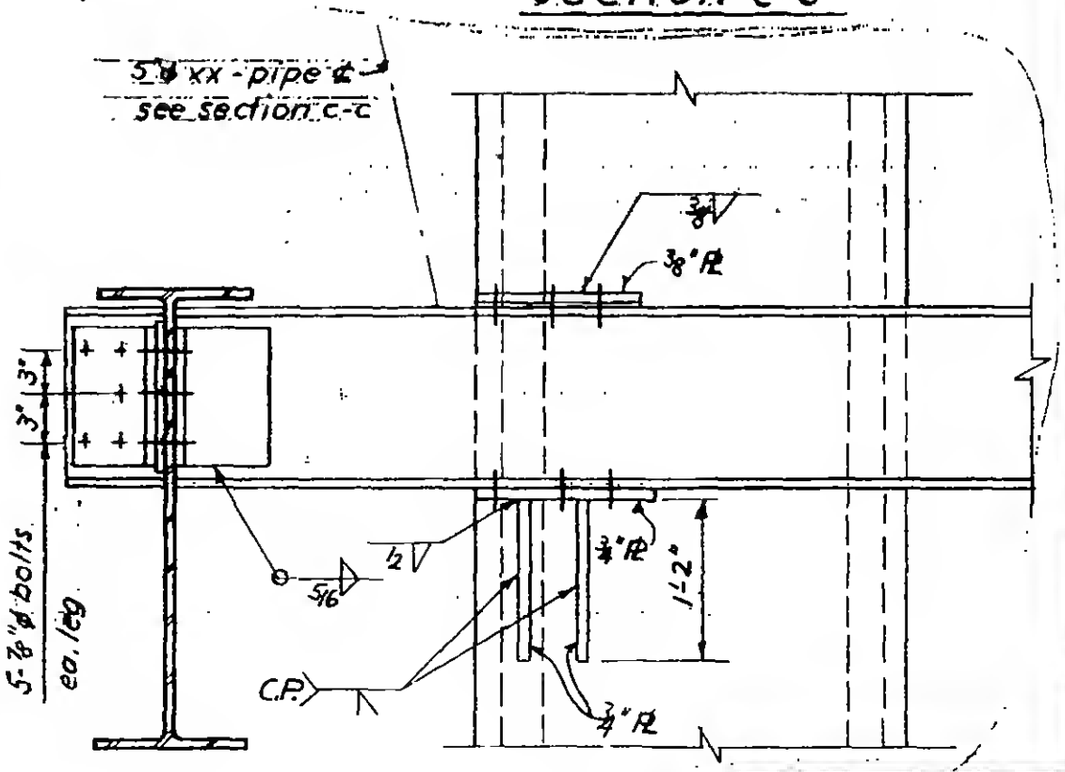

Section c-c

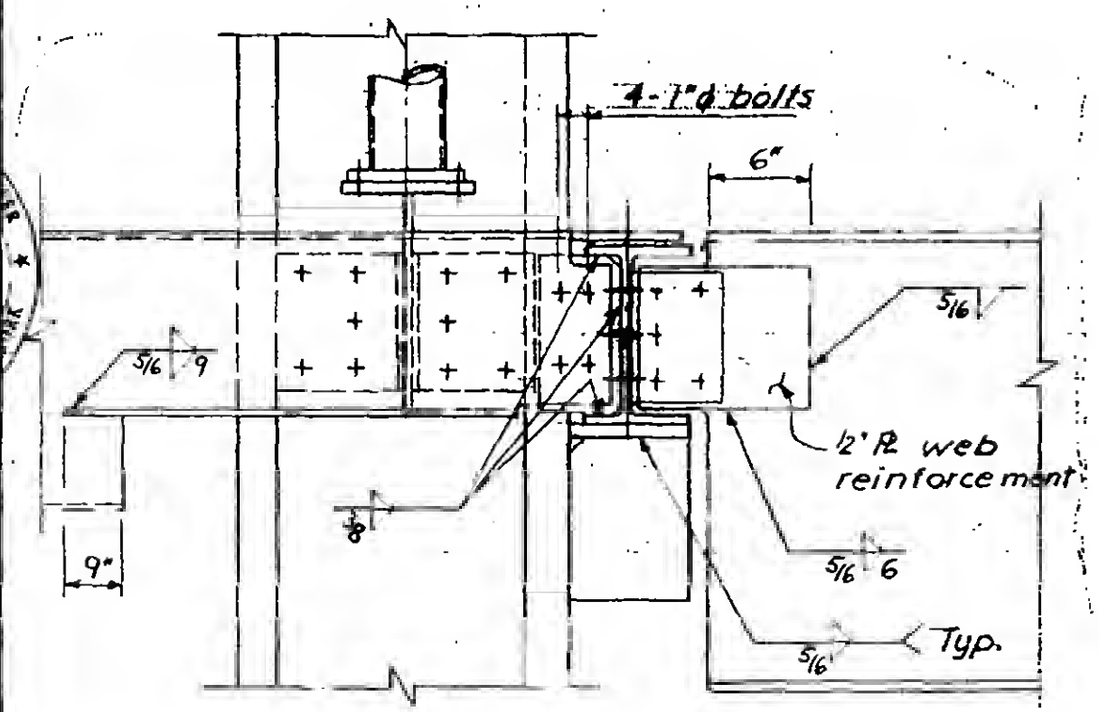

Section a-a

Section b-b

6-ABI-43

LICENSED PROFESSIONAL ENGINEER
LESLIE E. ROBERTSON
No. 34360
UNIVERSITY OF THE STATE OF NEW YORK