SKILLING - HELLE - CHRISTIANSEN - ROBERTSON  Structural & Civil Engineers

PROJECT THE WORLD TRADE CENTER | TITLE CONNECTION DETAIL 237 E & F | DATE 2-9-68

REVISIONS

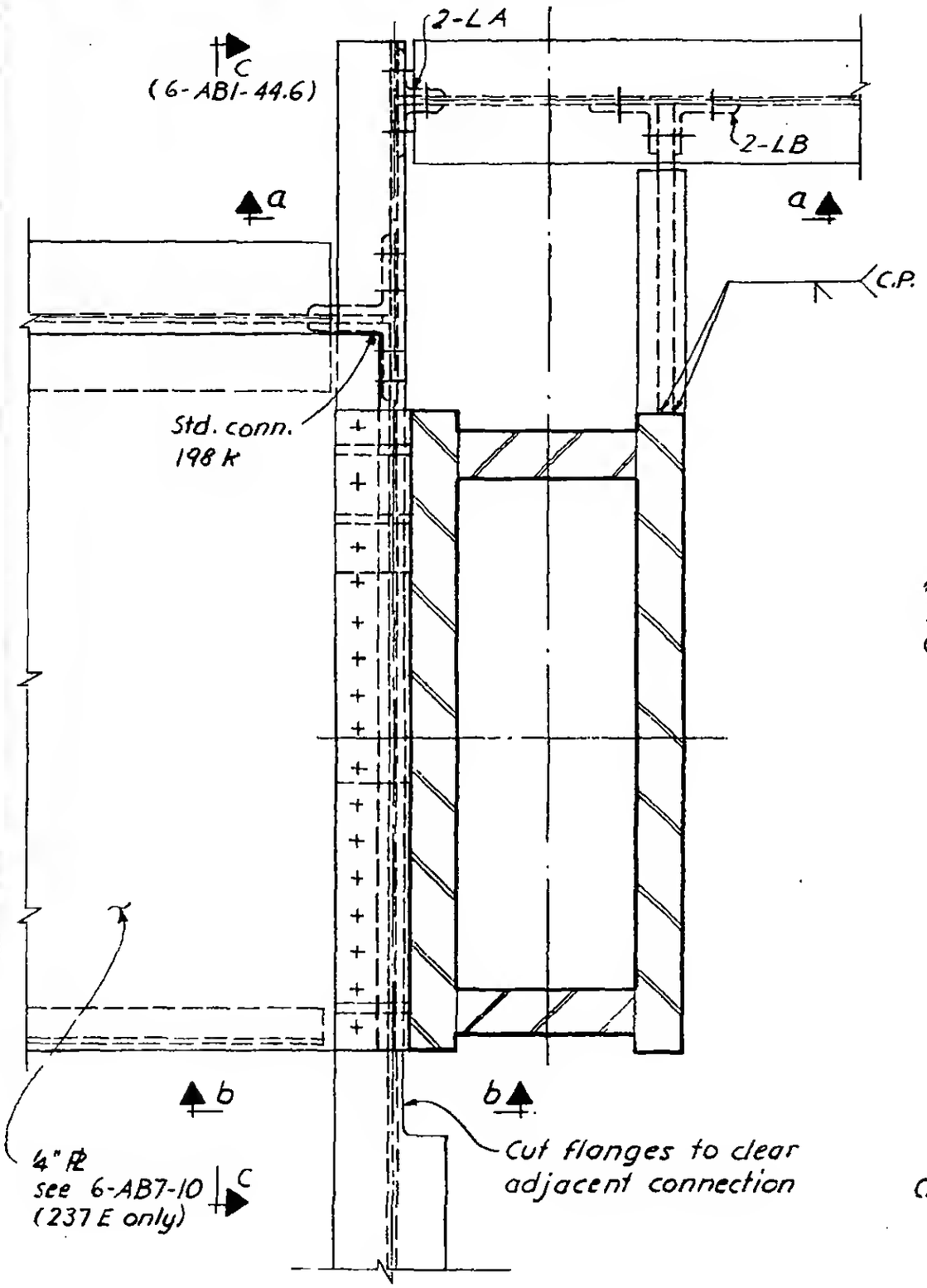


Plan

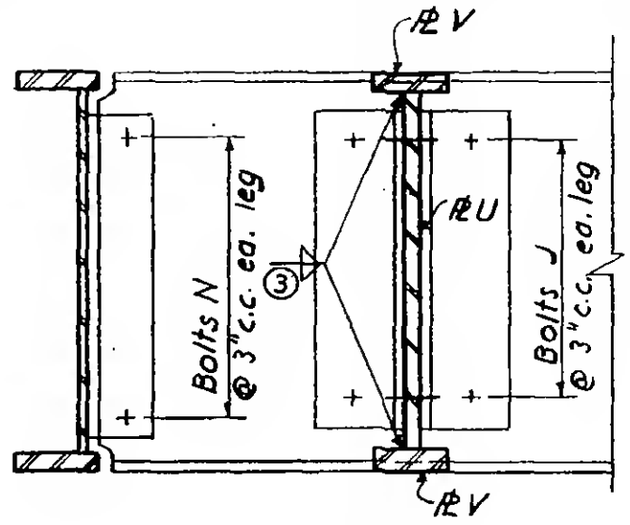


Section a-a

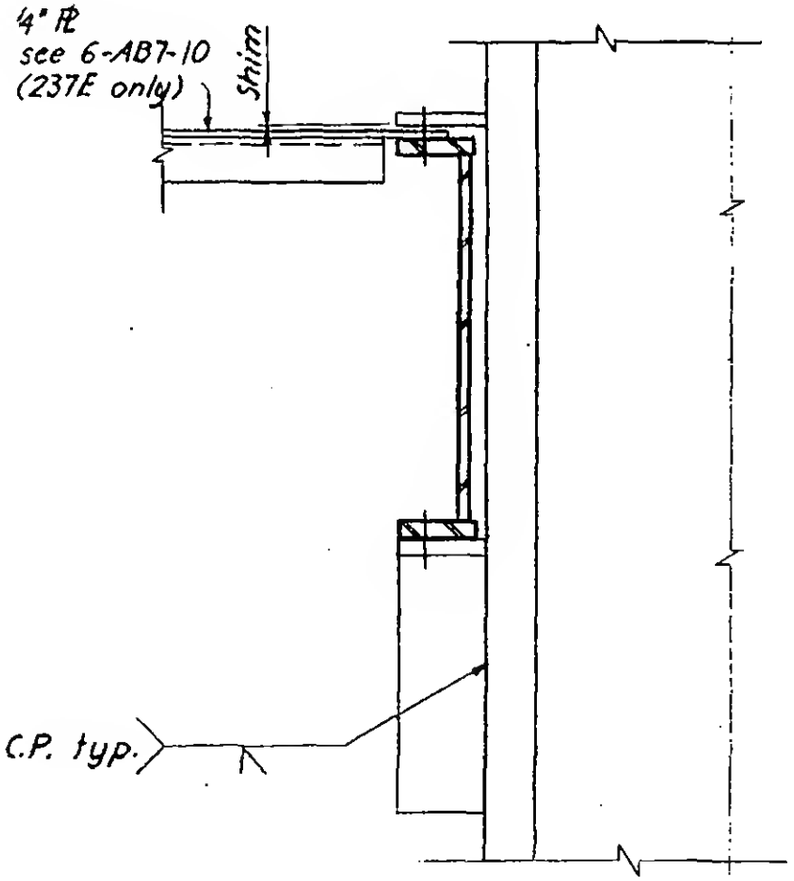


Section b-b

6-AB1-44.5

LICENSED PROFESSIONAL ENGINEER
LESLIE E. ROBERTSON
No. 34360
UNIVERSITY OF THE STATE OF NEW YORK