WORTHINGTON, SKILLING, HELLE & JACKSON — Civil & Structural Engineers

PROJECT THE WORLD TRADE CENTER | TITLE CONNECTION DETAIL 244A, B | DATE 6-5-67

REVISIONS

10-2-67
9-25-68

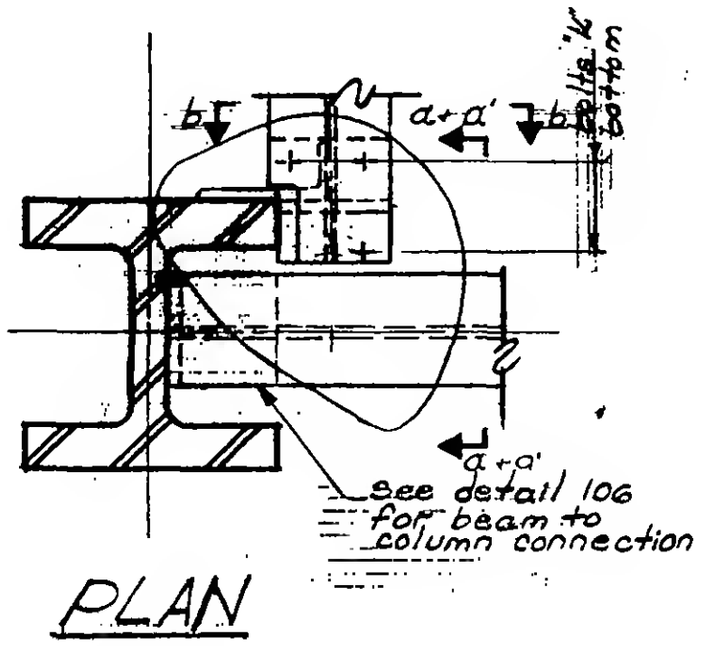

PLAN

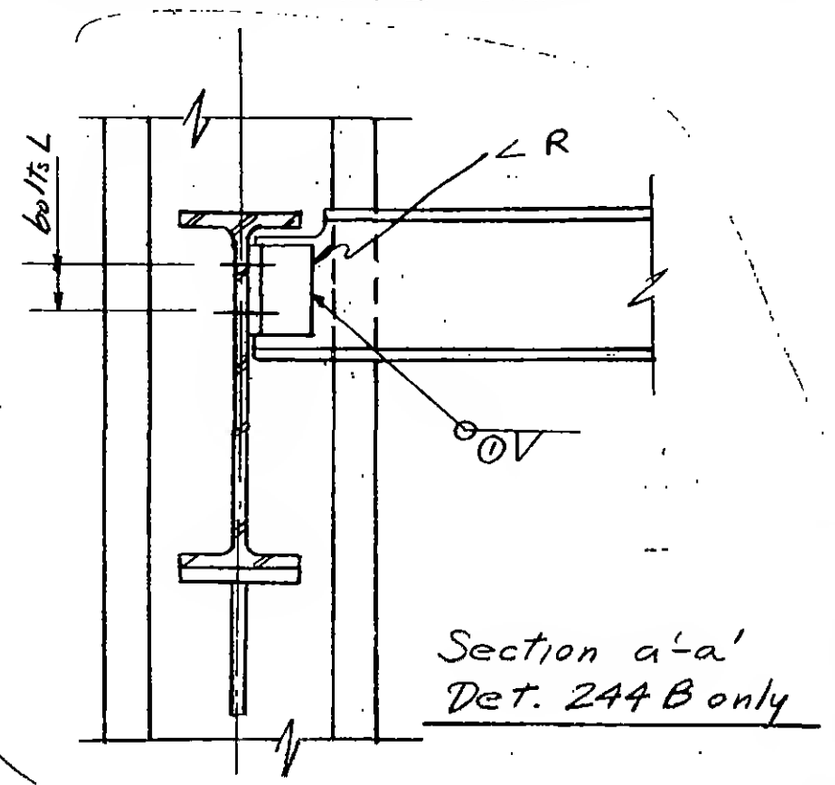

Section a-a' Det. 244B only

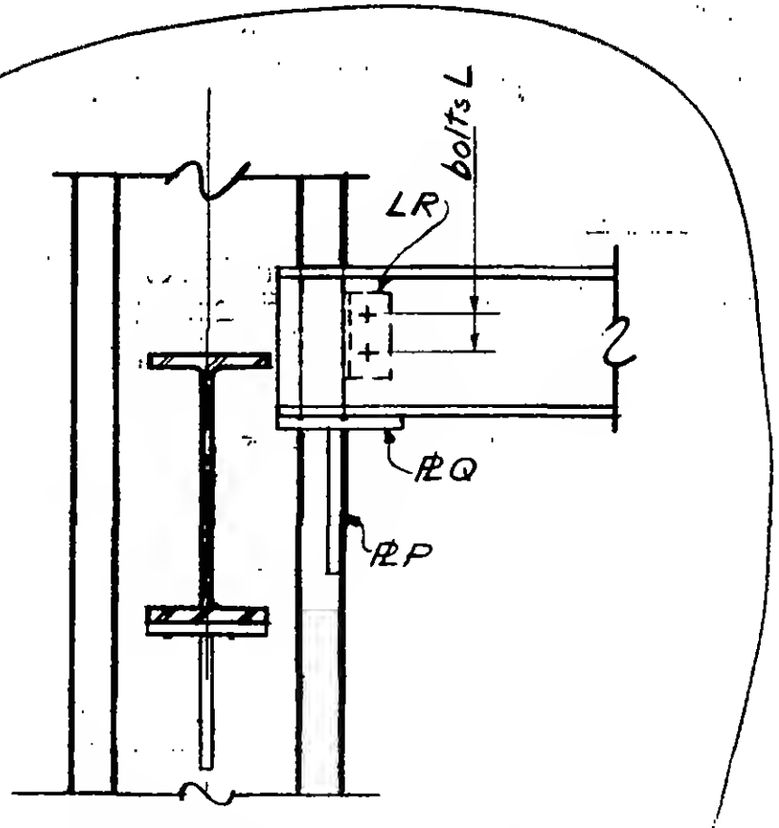

Section a-a det. 244A

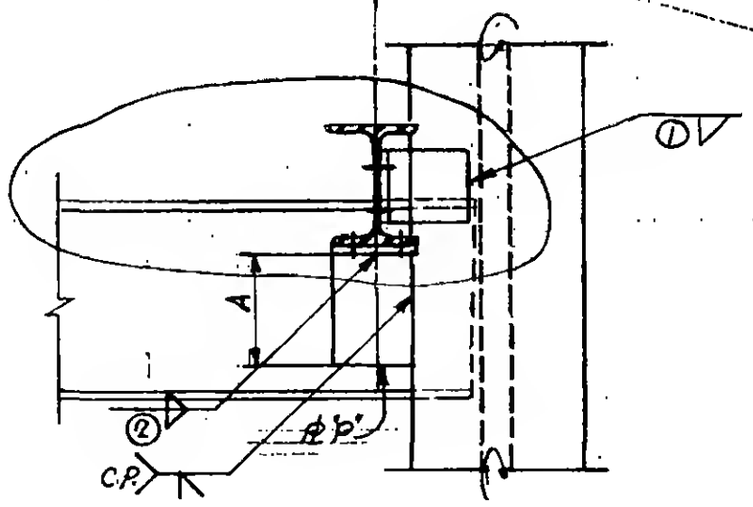

Section b-b det. 244A

LESLIE E. ROBERTSON LICENSED PROFESSIONAL ENGINEER No. 34360 STATE OF NEW YORK

6-AB1-50