WORTHINGTON, SKILLING, HELLE & JACKSON — Civil & Structural Engineers

PROJECT THE WORLD TRADE CENTER | TITLE CONNECTION DETAIL 249 A, B, C | DATE 5-1-67

REVISIONS

5-9-67
7-28-67
8-5-67
9-15-67
11-10-67
12-7-67

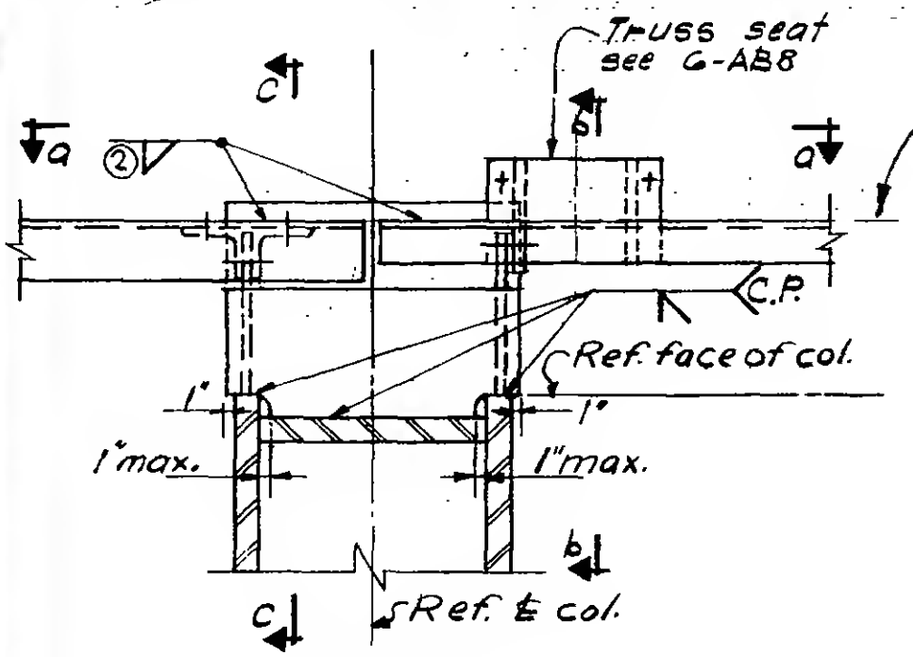

Plan

Note: See framing plan for location of beam

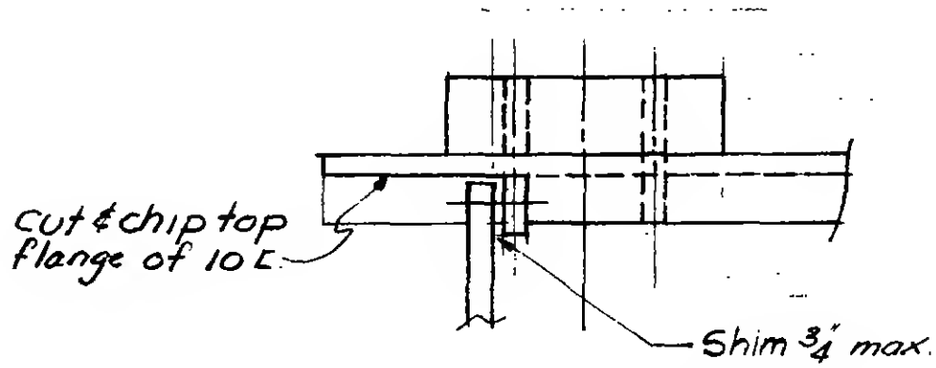

SECTION d-d

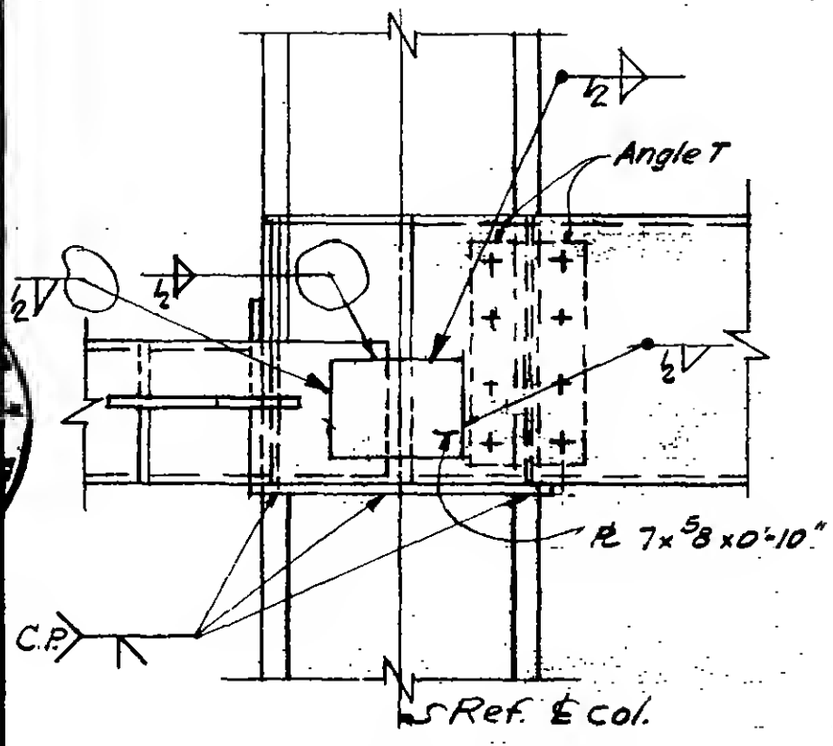

Section a-a

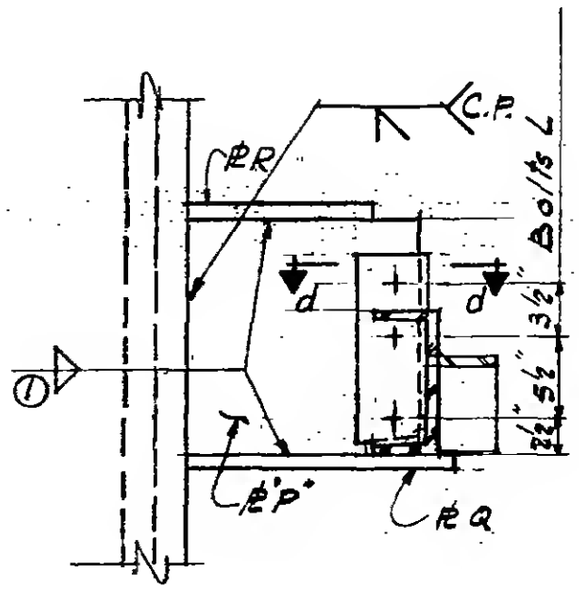

SECTION b-b

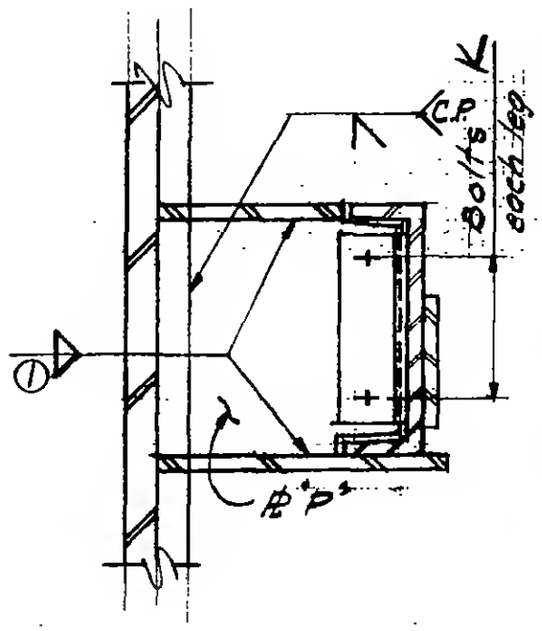

SECTION C-C

LICENSED PROFESSIONAL ENGINEER LESLIE E. ROBERTSON No. 24960 UNIVERSITY OF THE STATE OF NEW YORK

6-AB1-55