WORTHINGTON, SKILLING, HELLE & JACKSON — Civil & Structural Engineers

PROJECT: THE WORLD TRADE CENTER | TITLE: CONNECTION DETAIL — 260 A, B & D | DATE: 6-5-67

REVISIONS
7-5-67
7-28-67
10-2-67

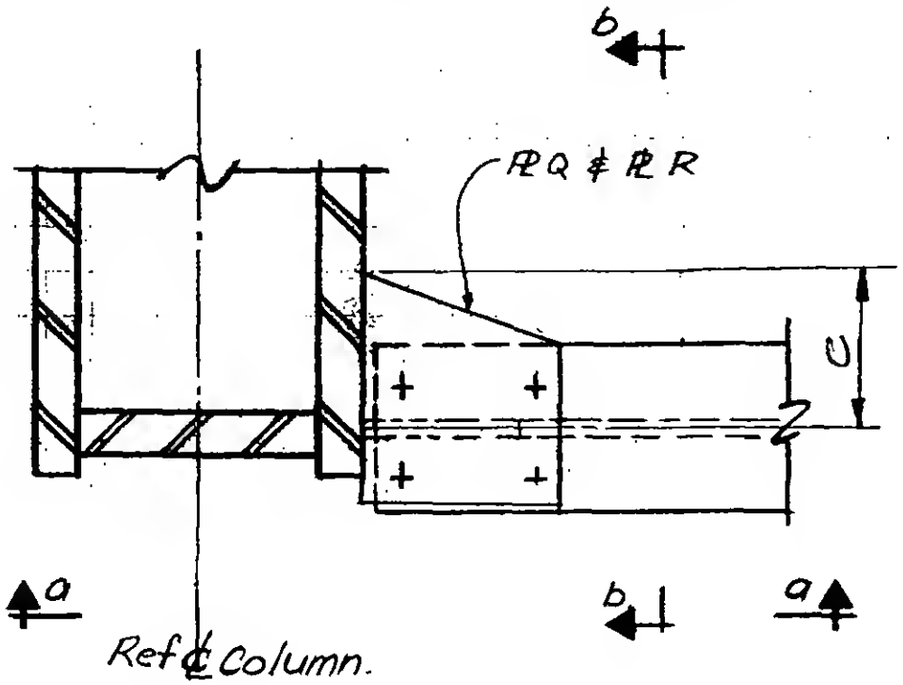

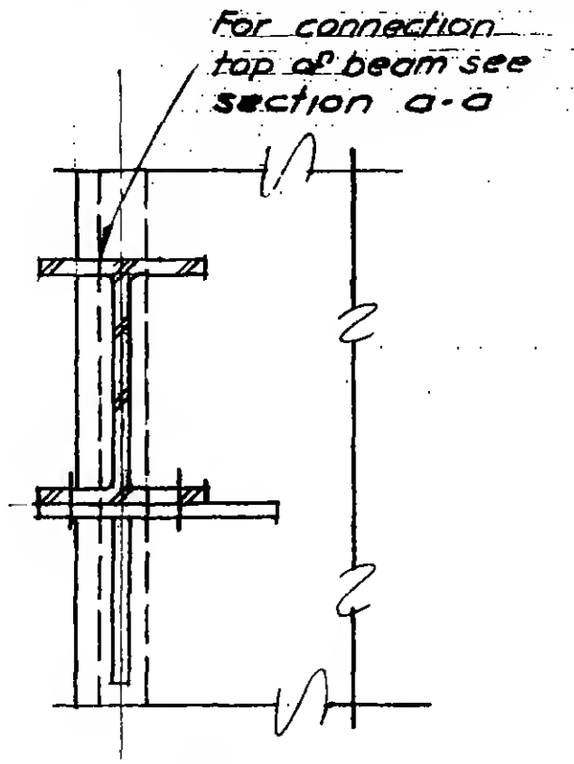

Plan.

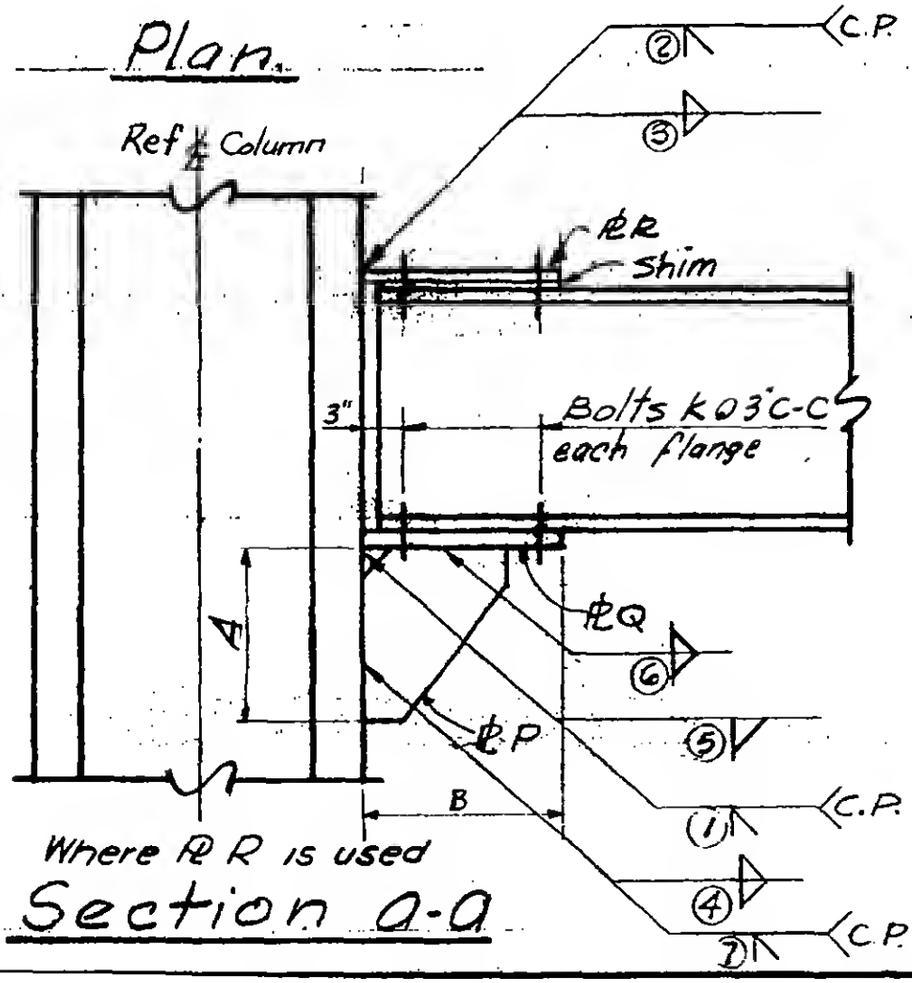

Where ℄R is used

Section a-a

Section b-b

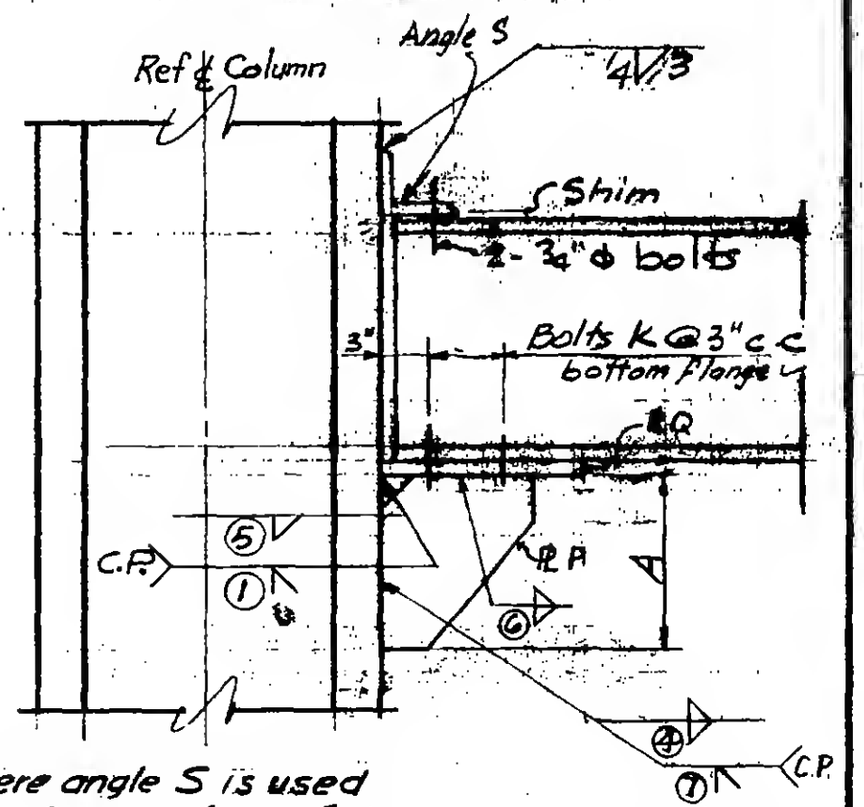

Where angle S is used

Section a-a

6-AB1-65

LESLIE E. ROBERTSON — No. 34360 — REGISTERED PROFESSIONAL ENGINEER — STATE OF NEW YORK