WORTHINGTON, SKILLING, HELLE & JACKSON — Civil & Structural Engineers

PROJECT: THE WORLD TRADE CENTER | TITLE: CONNECTION DETAIL 266 A, B | DATE: 6-30-67

REVISIONS

10-5-67

11-27-68

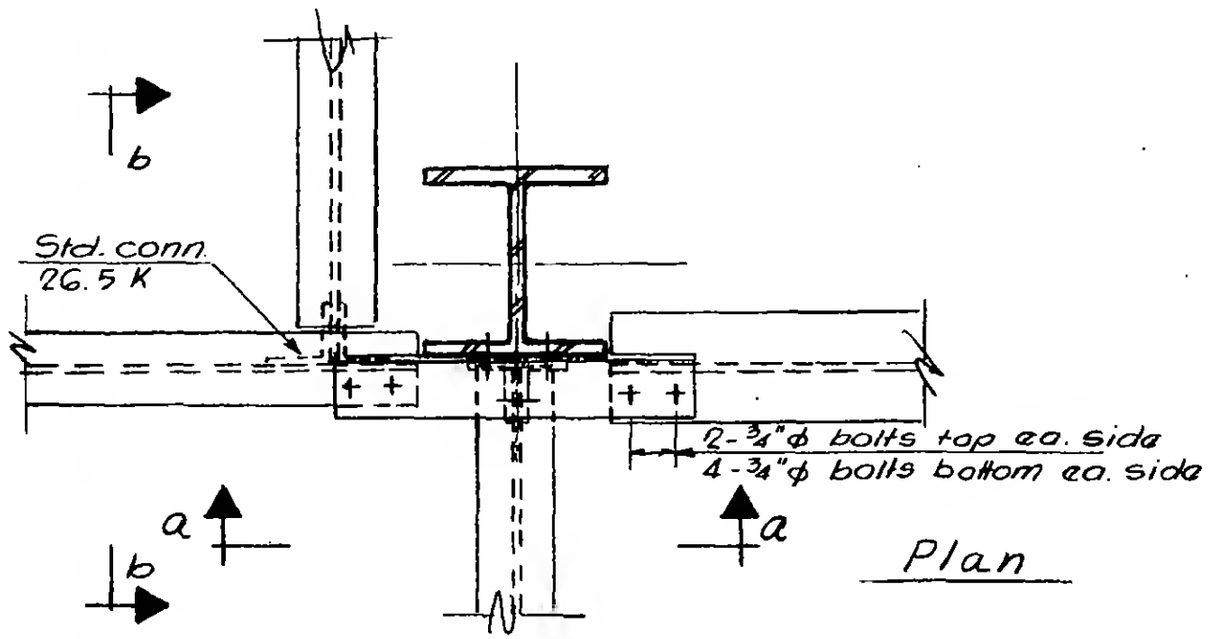

Plan

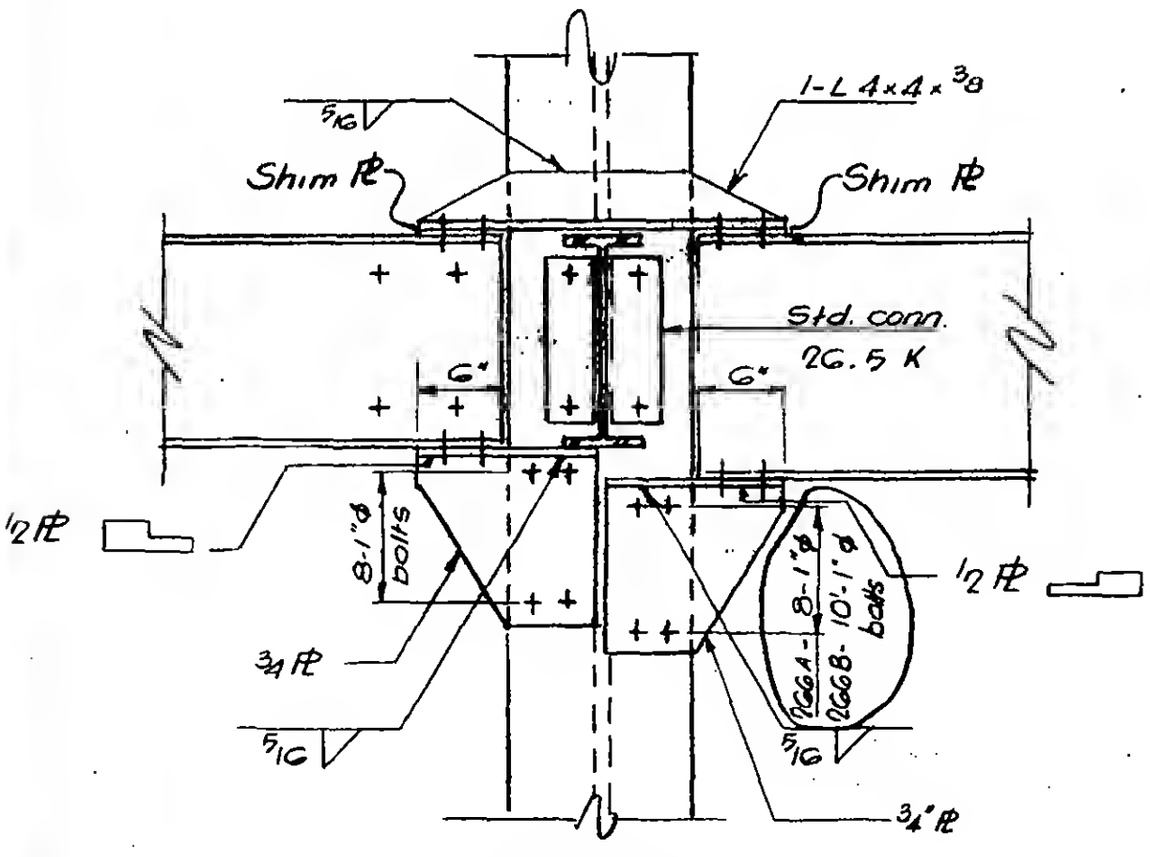

SECTION a-a

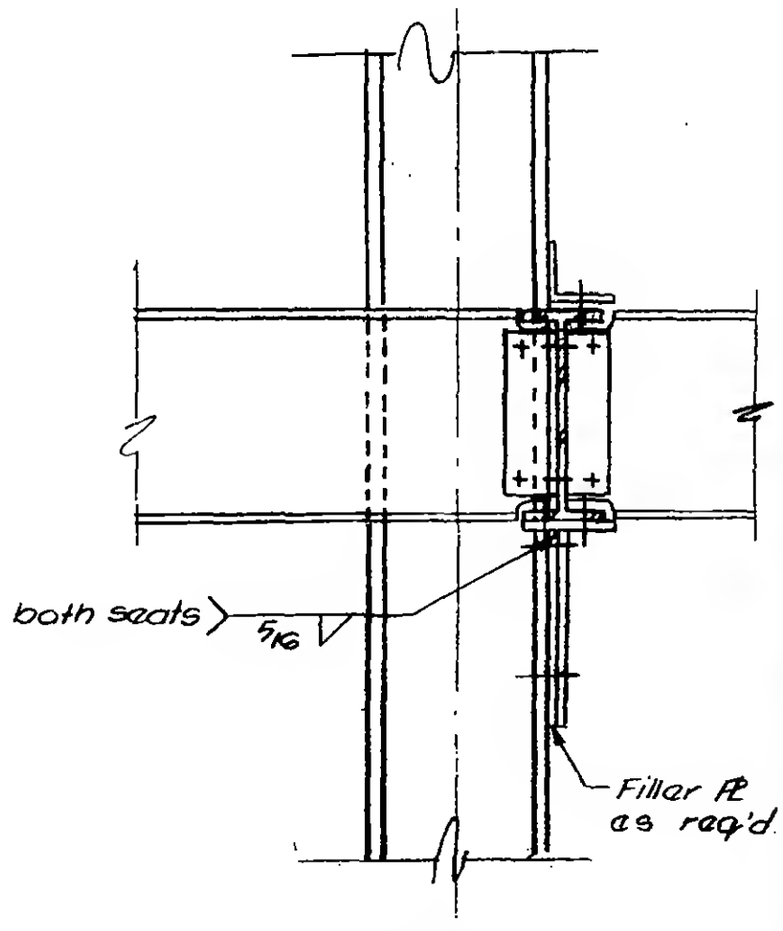

SECTION b-b

LICENSED PROFESSIONAL ENGINEER
LESLIE E. ROBERTSON
No. 24360
STATE OF NEW YORK

G-AB1-71