SKILLING - HELLE - CHRISTIANSEN - ROBERTSON — Structural & Civil Engineers

PROJECT: THE WORLD TRADE CENTER | TITLE: CONNECTION DETAIL 267A,B | DATE: 6-5-67

REVISIONS
9-15-67
11-10-67

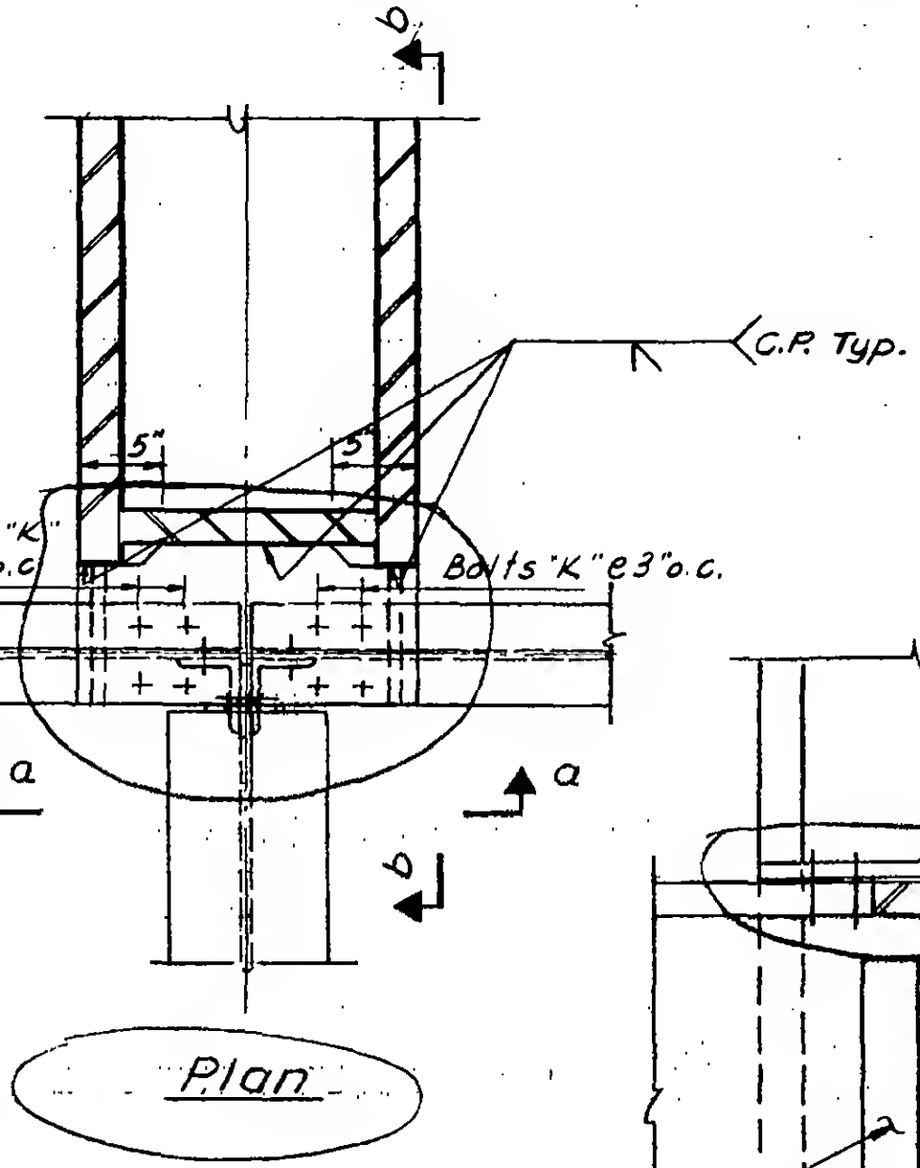

Plan

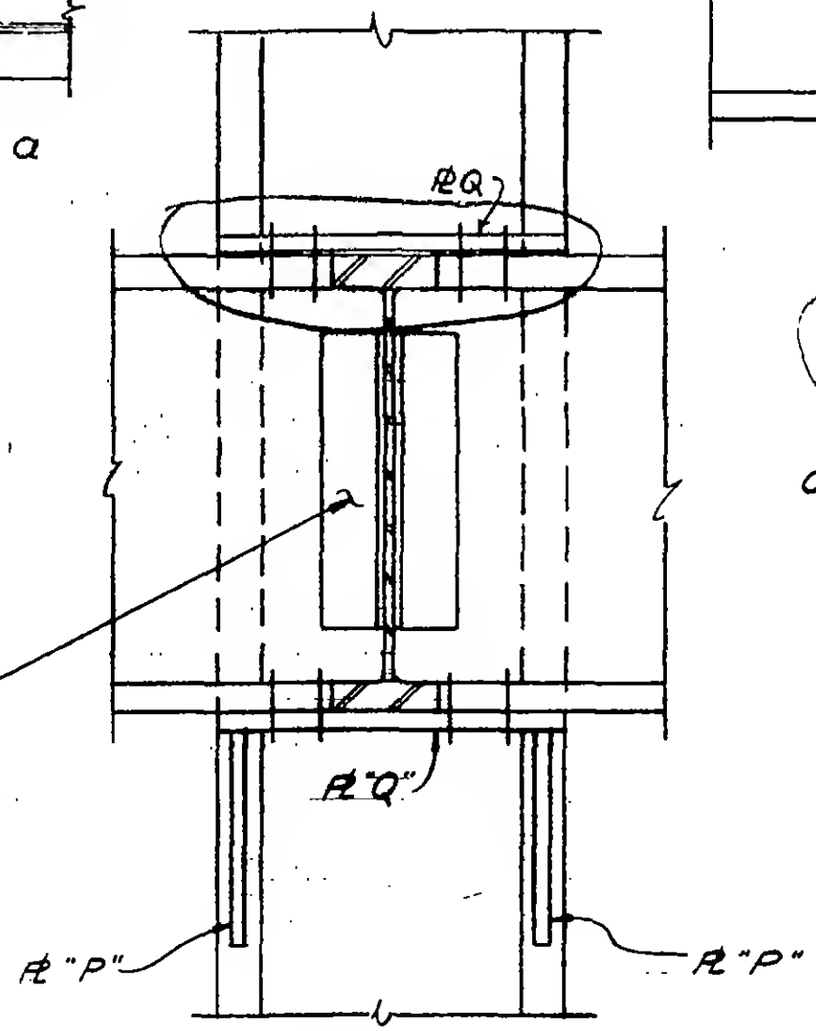

Section a-a

Standard conn's
R = 56ᵏ for 267A
R = 27ᵏ for 267B

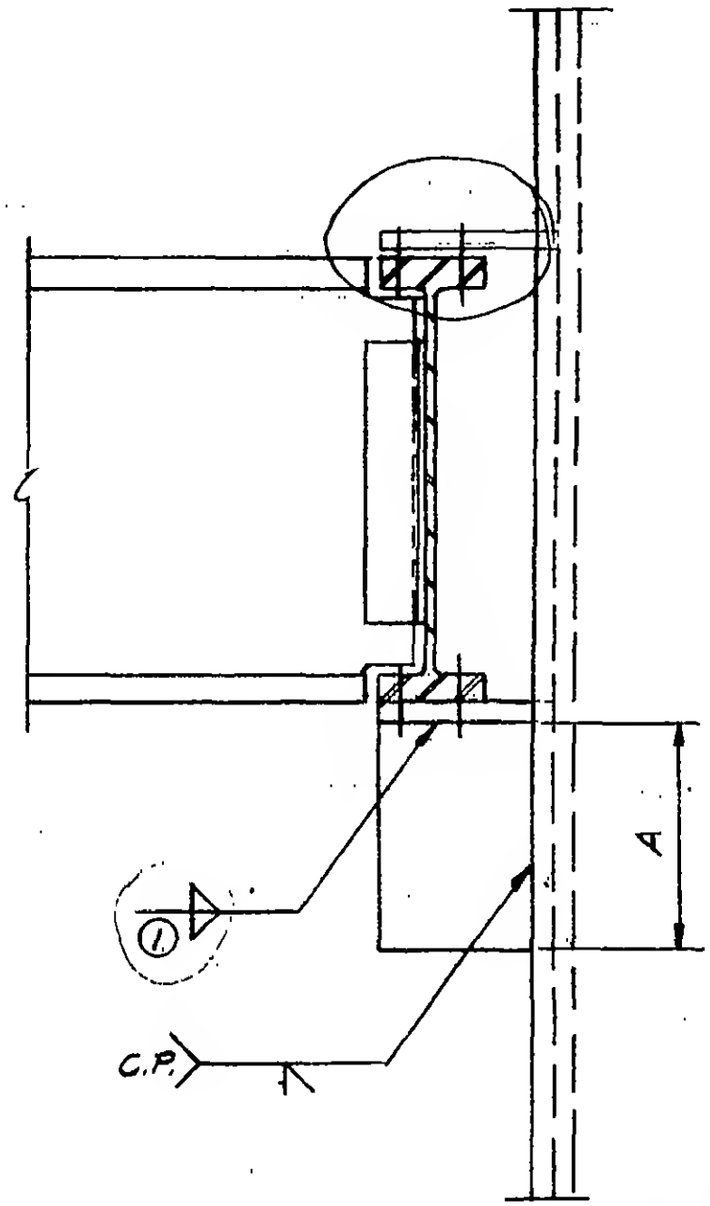

Section b-b

6-AB1-72