WORTHINGTON, SKILLING, HELLE & JACKSON — Civil & Structural Engineers

PROJECT THE WORLD TRADE CENTER | TITLE CONNECTION DETAIL 268A | DATE 7/14/67

REVISIONS
8-5-67
11-16-67

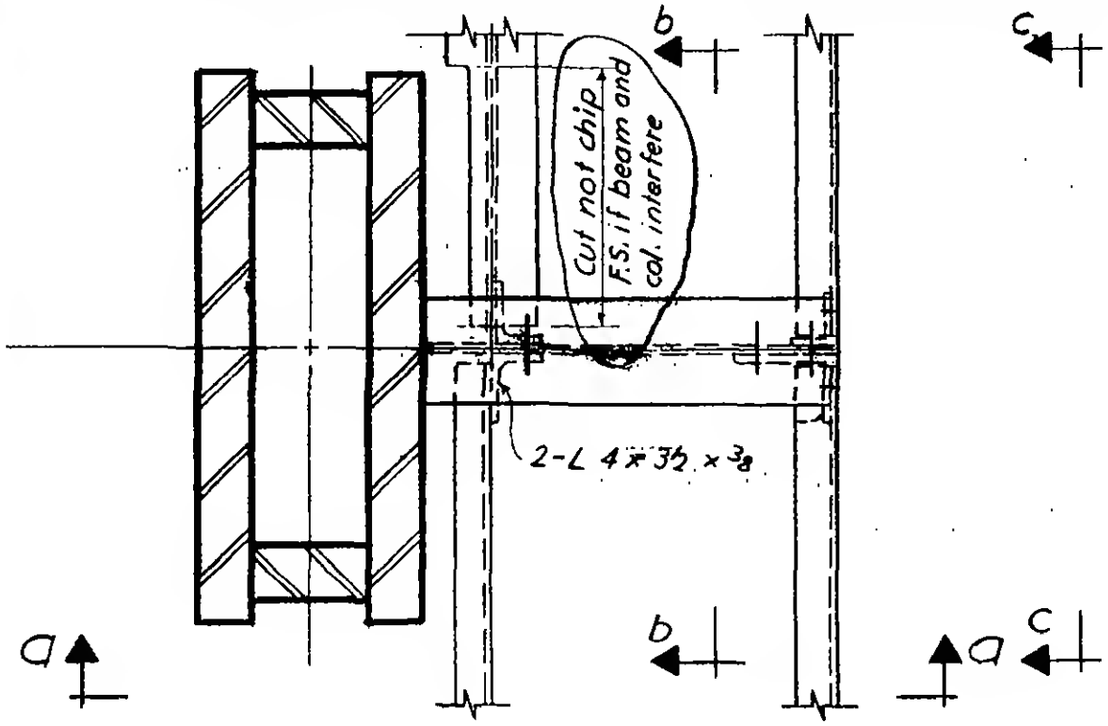

Plan

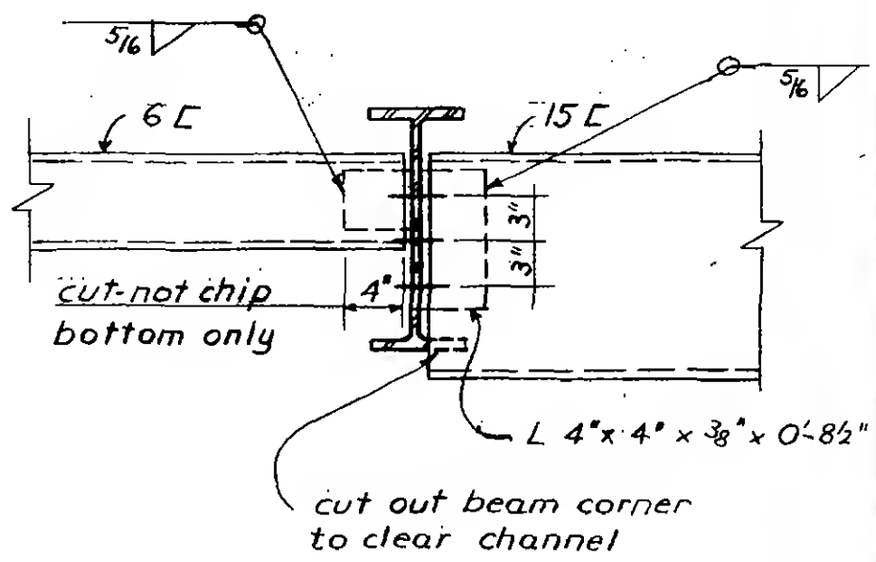

Section c-c

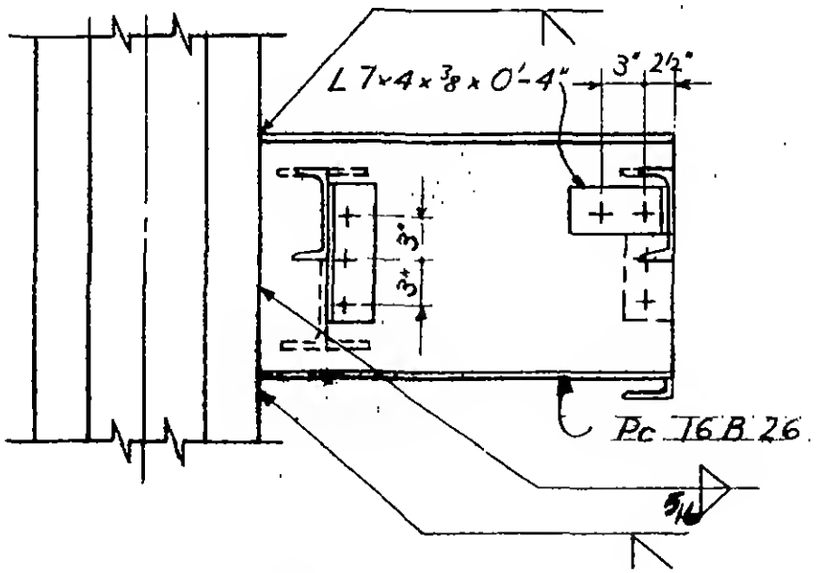

Section a-a

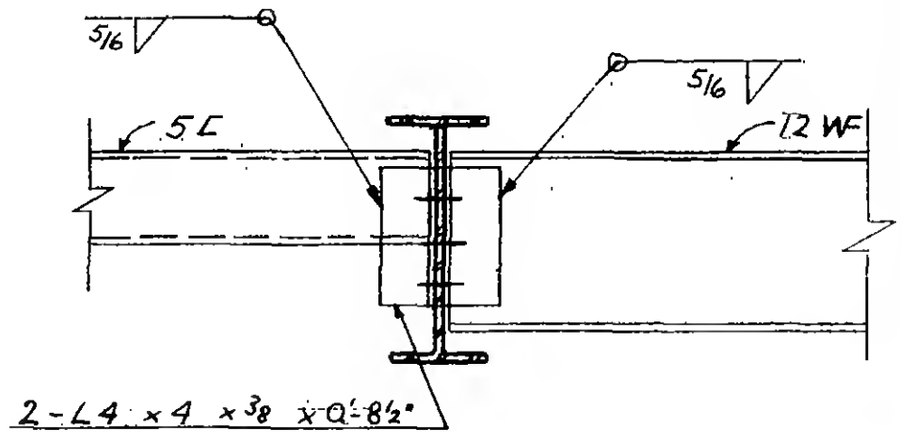

Section b-b

All bolts ¾" ϕ

LICENSED PROFESSIONAL ENGINEER
LESLIE E. ROBERTSON
No. 34360
STATE OF NEW YORK

6-AB1-73