SKILLING, HELLE, CHRISTIANSEN, ROBERTSON — Structural & Civil Engineers

PROJECT THE WORLD TRADE CENTER | TITLE CONNECTION DETAIL 272 C, D, G | DATE 9-18-68

REVISIONS

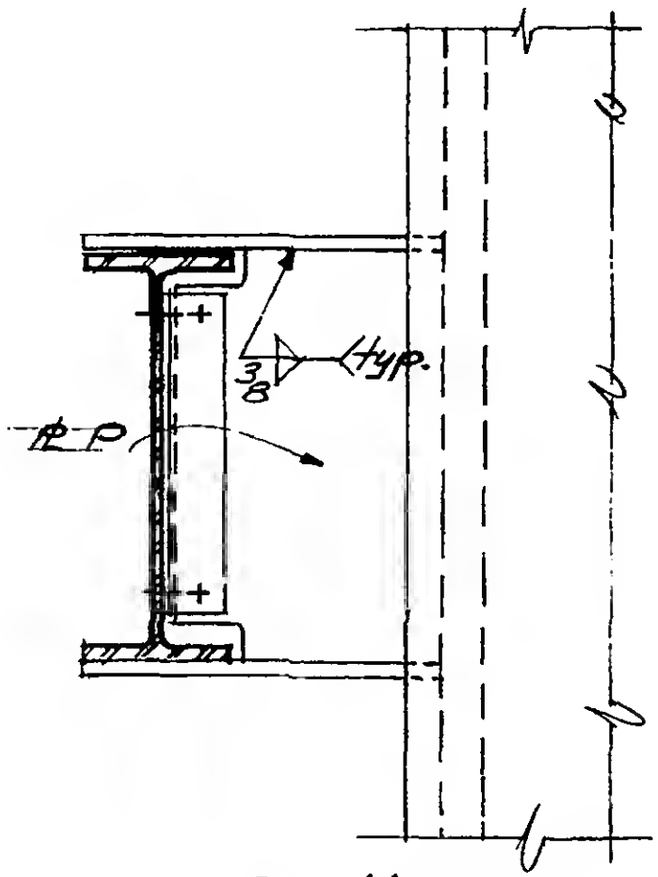

Section a-a

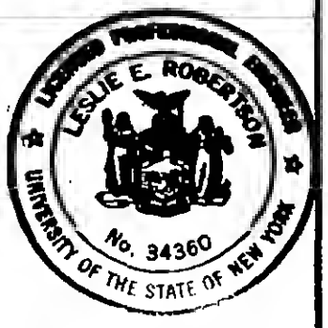

DESIGNED

DRAWN

REVIEWED

6-ABI-77.4