WORTHINGTON, SKILLING, HELLE & JACKSON — Civil & Structural Engineers

PROJECT: THE WORLD TRADE CENTER | TITLE: CONNECTION DETAIL 273 A & B | DATE: 6-5-67

REVISIONS

10-2-67

2-21-68

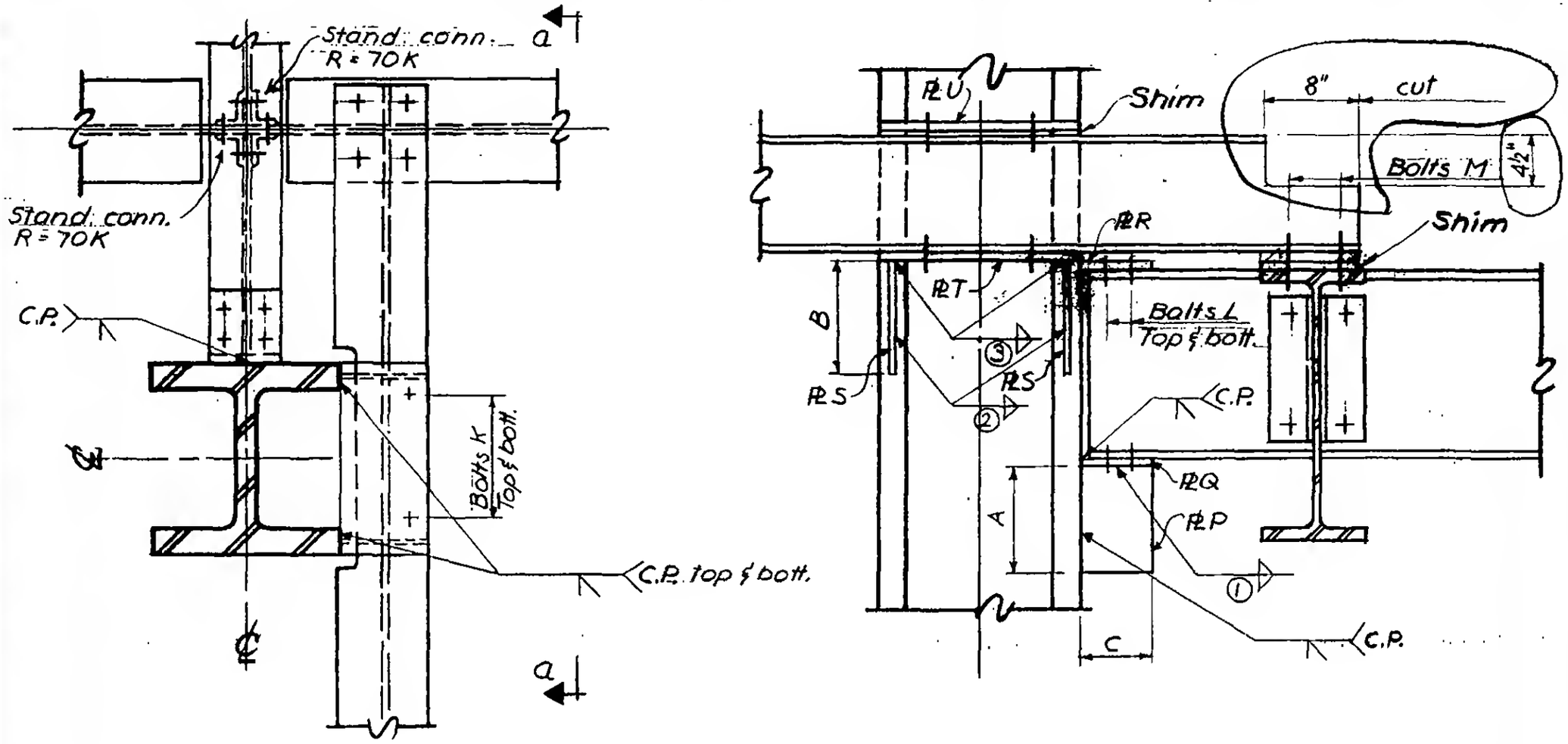


Plan

Section a-a

6-AB1-78