PROJECT	TITLE	DATE
THE WORLD TRADE CENTER	CONNECTION DETAIL 274A (ALT.)	5-9-67

REVISIONS
7-28-67
9-15-67
10-11-67

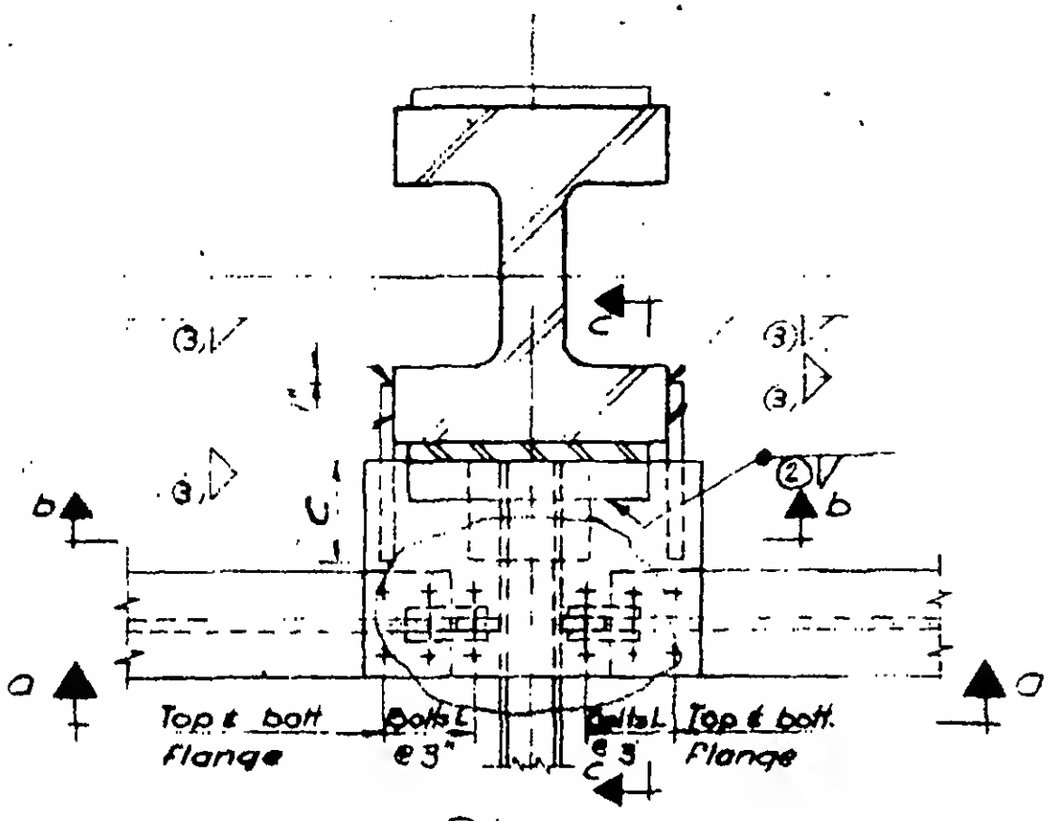

Plan

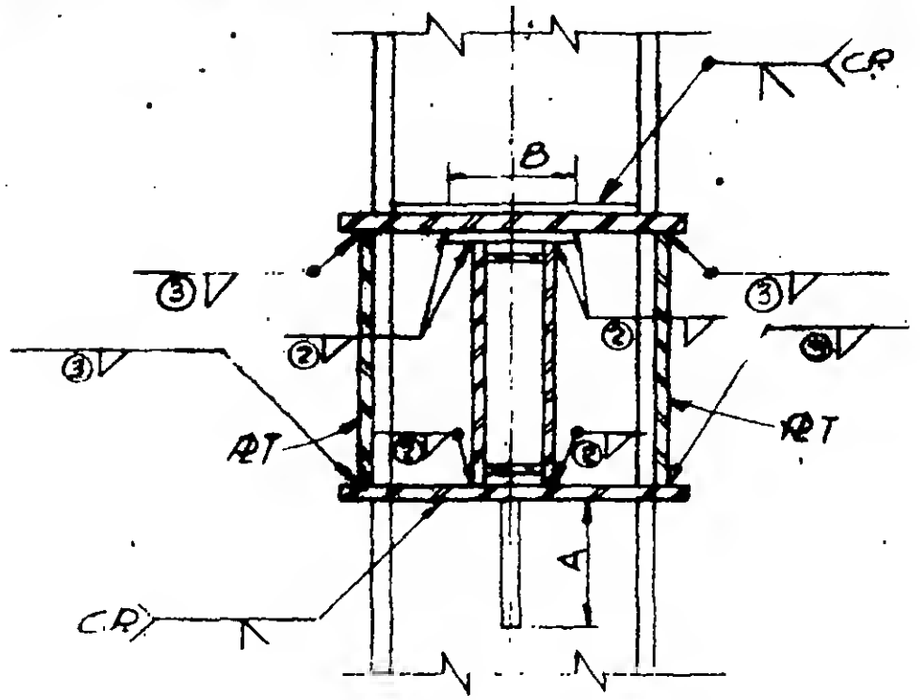

Section b-b

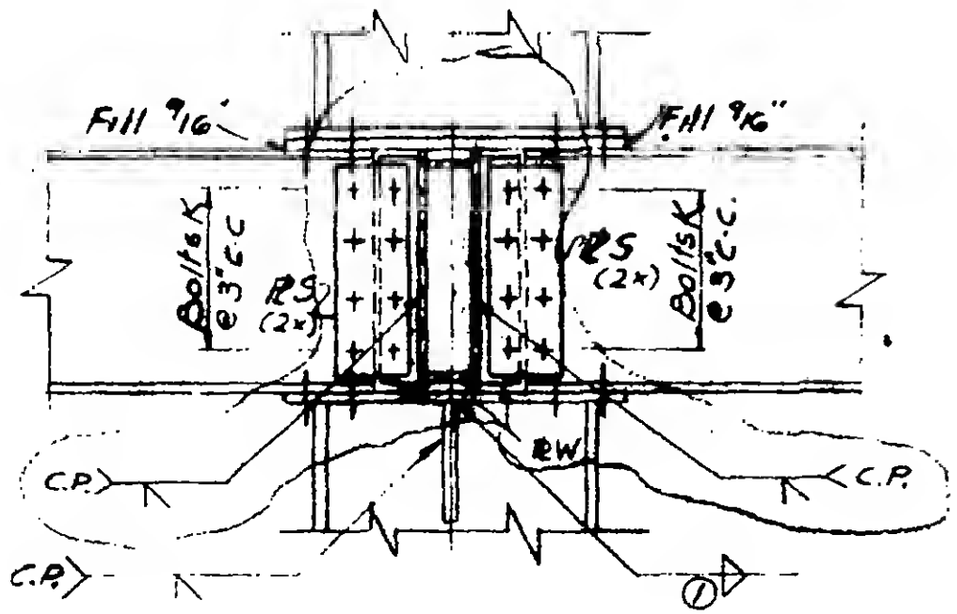

Section a-a

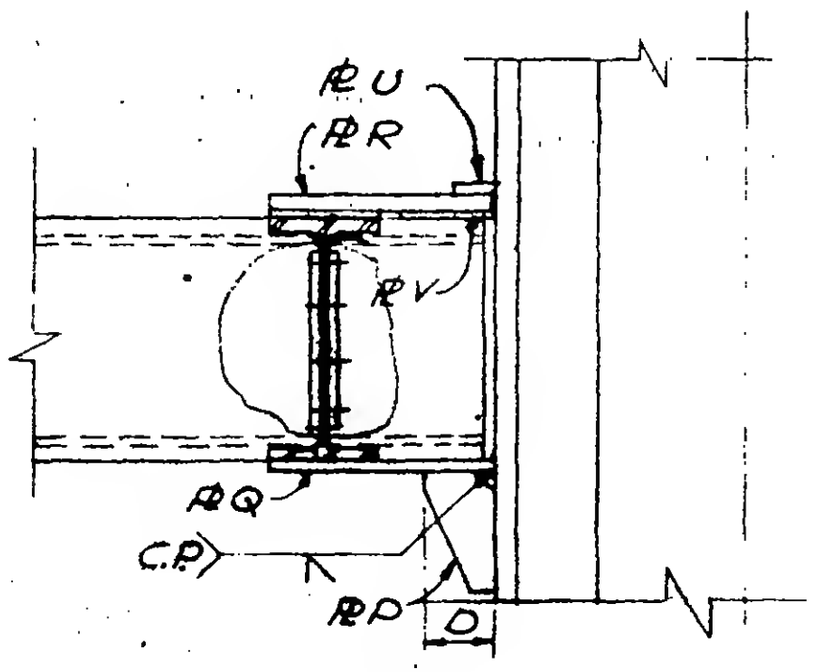

Section c-c

G-AB1-81 ALT.