WORTHINGTON, SKILLING, HELLE & JACKSON — Civil & Structural Engineers

PROJECT: THE WORLD TRADE CENTER | TITLE: CONNECTION DETAIL 274 A | DATE: 5-9-67

REVISIONS
7-28-67
9-15-67
11-14-67
12-7-67

Note: Use Alt. for all locations which do not have shop drawing approved for fabrication.

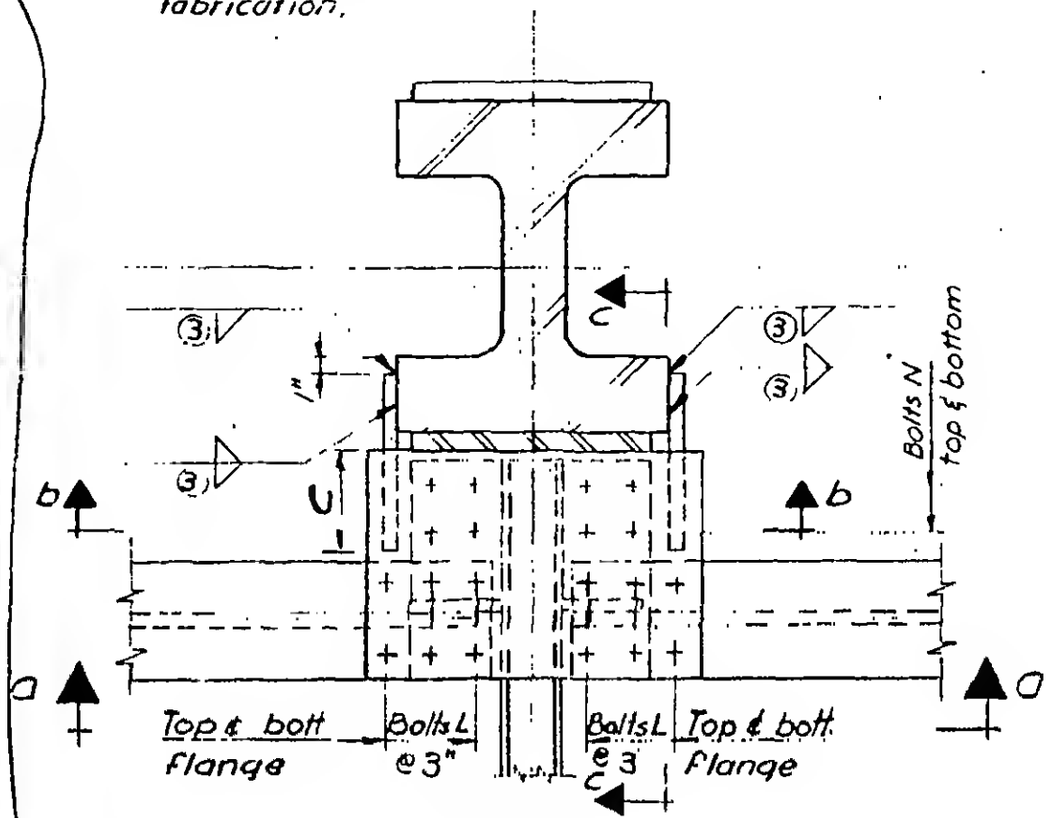

Plan

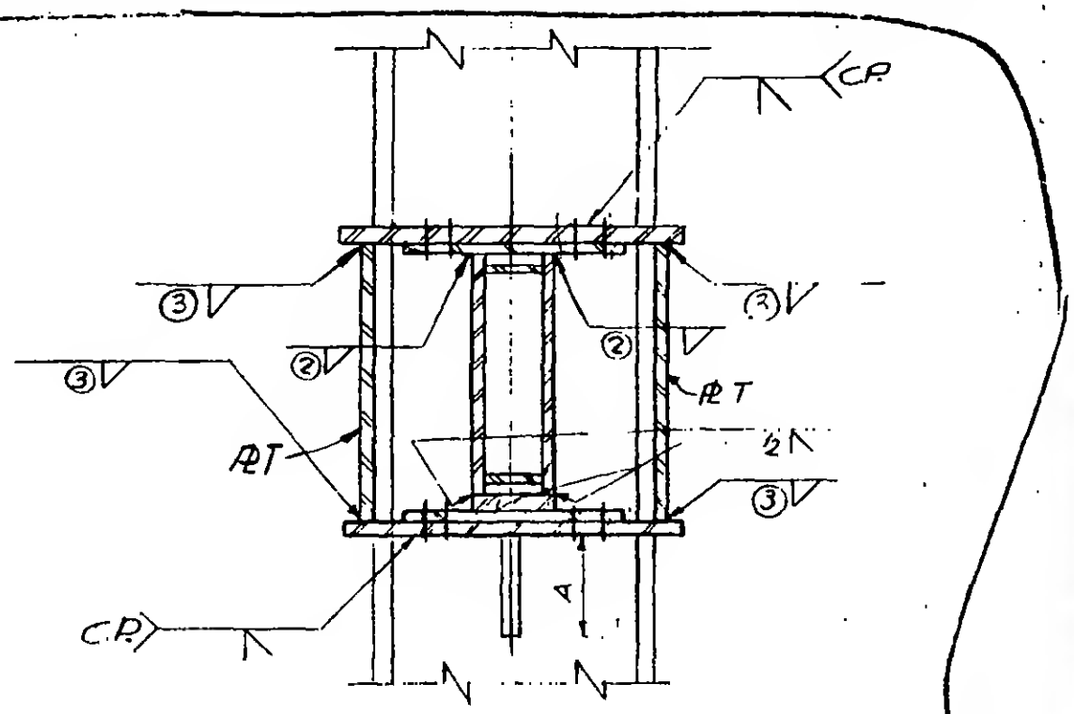

Section b-b

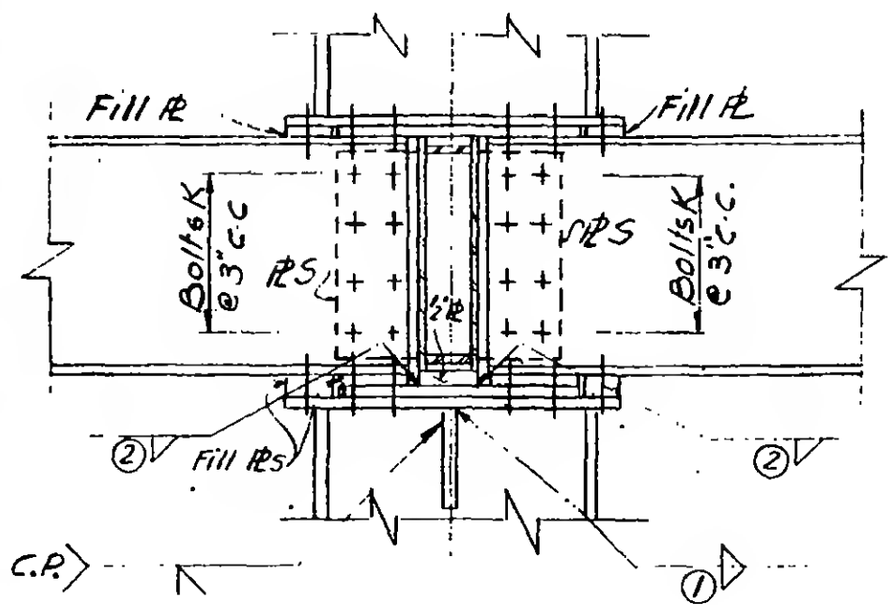

Section a-a

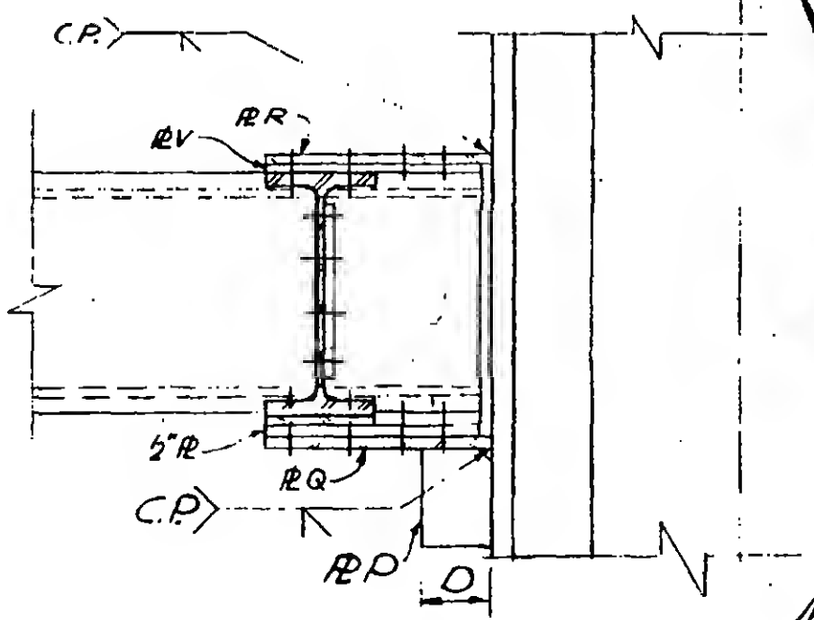

Section c-c

G-AB1-81 Alt.