WORTHINGTON, SKILLING, HELLE & JACKSON — Civil & Structural Engineers

PROJECT: THE WORLD TRADE CENTER | TITLE: CONNECTION [illegible] 274-A (ALT. 5) | DATE: [illegible]

REVISIONS

7-28-67
9-15-67
11-14-67
12-7-67
2-26-68

Note: Use Alt. for all locations which do not have shop drawing approved for fabrication.

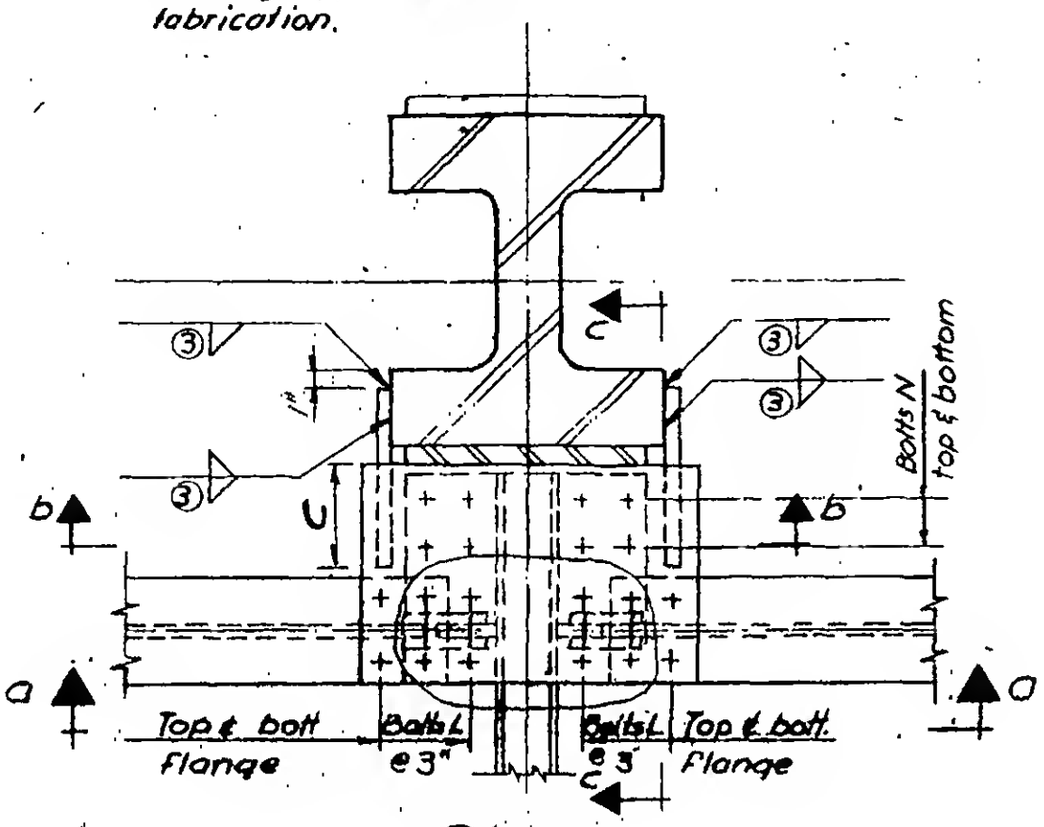

Plan

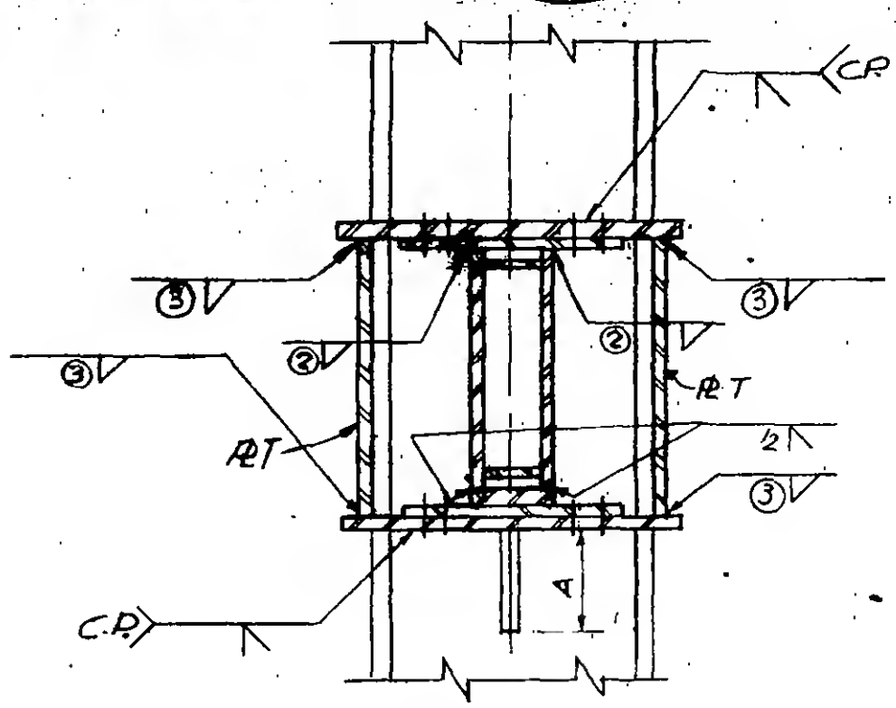

Section b-b

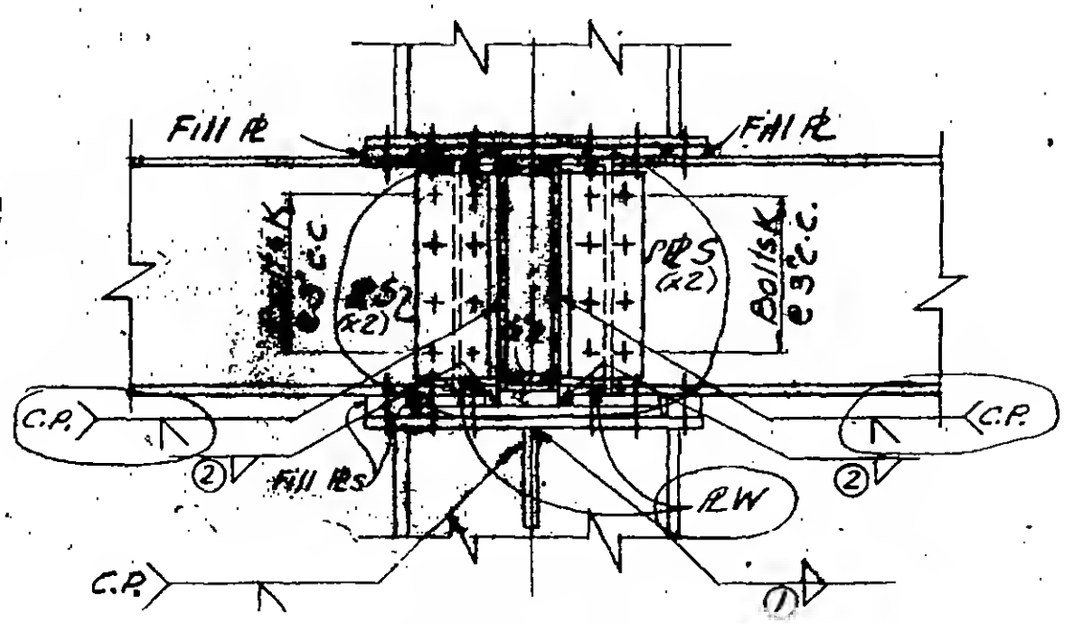

Section a-a

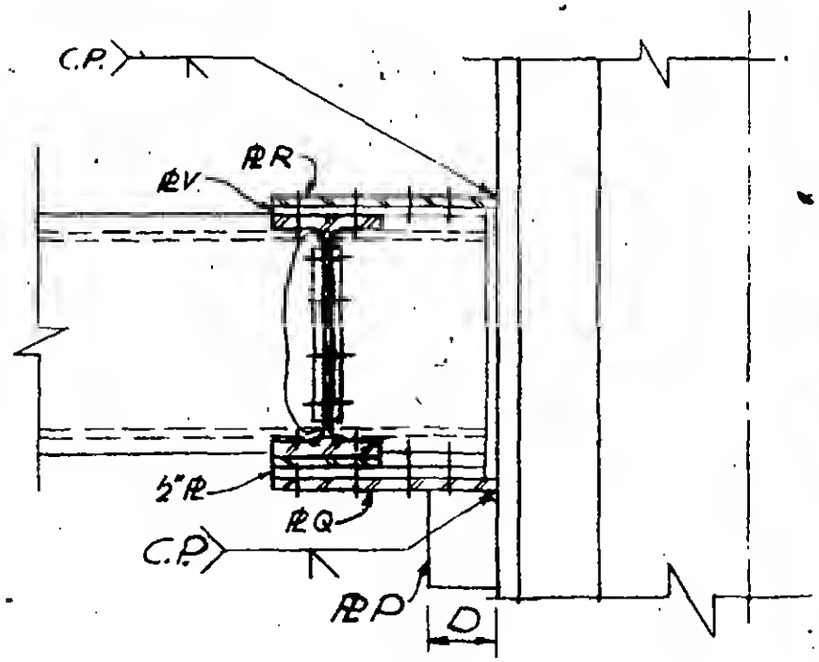

Section c-c

LICENSED PROFESSIONAL ENGINEER LESLIE E. ROBERTSON No. 34350 UNIVERSITY OF THE STATE OF NEW YORK

6-AB1-8 (ALT. 5)