SKILLING -- HELLE -- CHRISTIANSEN -- ROBERTSON Structural & Civil Engineers

PROJECT THE WORLD TRADE CENTER | TITLE CONNECTION DETAIL 274 B, C, D | DATE 9-15-67

REVISIONS
10-5-67

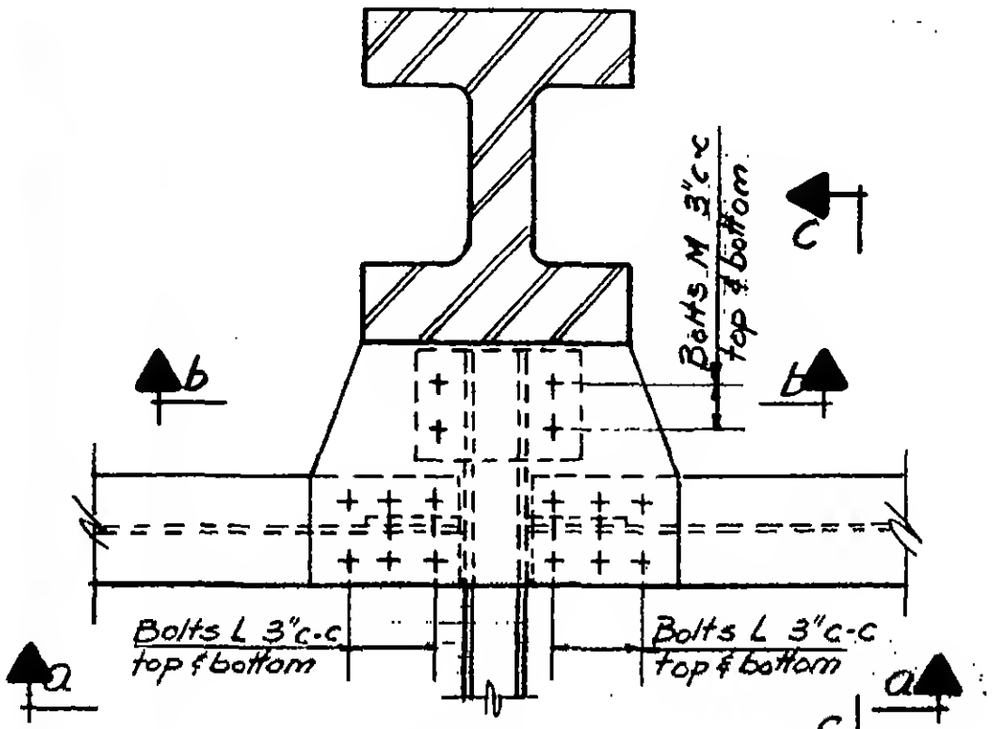

Plan

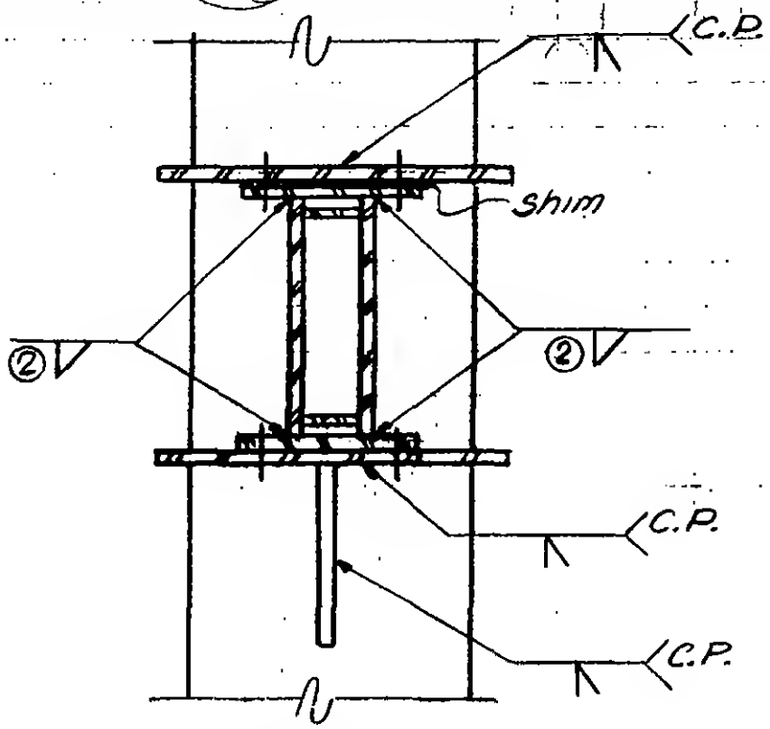

Section b-b

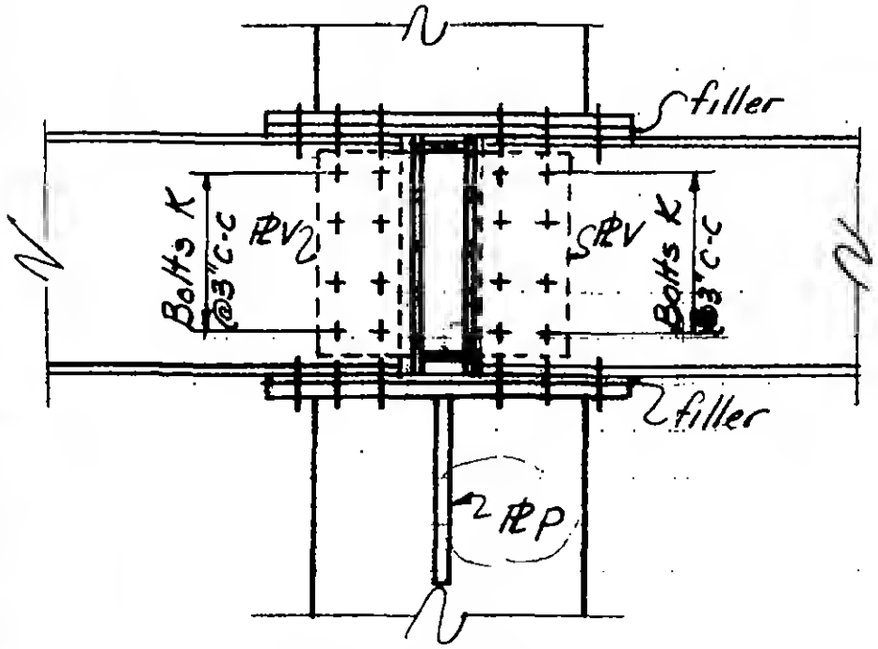

Section a-a

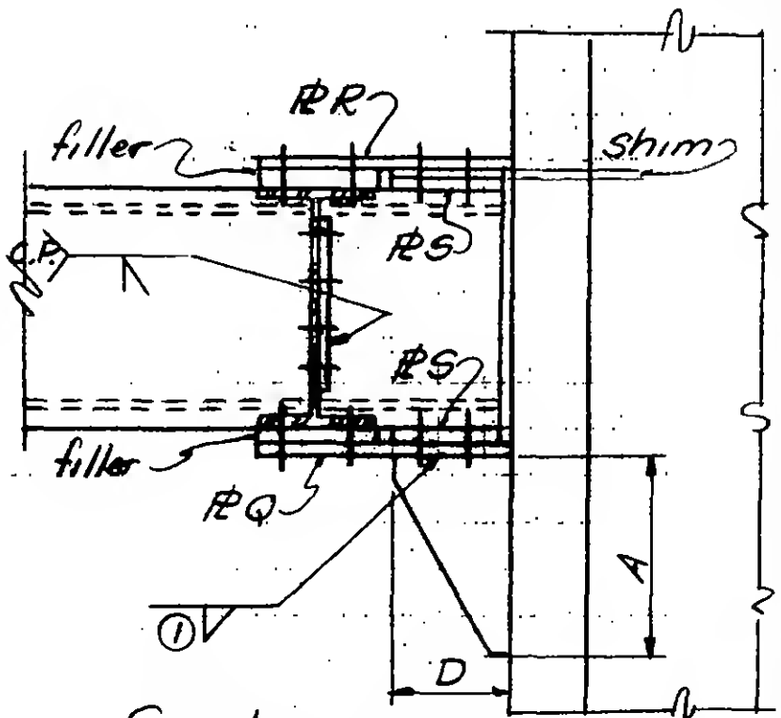

Section c-c

LICENSED PROFESSIONAL ENGINEER
LESLIE E. ROBERTSON
No. 34360
UNIVERSITY OF THE STATE OF NEW YORK

6-AB1-81.2