WORTHINGTON, SKILLING, HELLE & JACKSON — Civil & Structural Engineers

PROJECT	TITLE	DATE
THE WORLD TRADE CENTER	CONNECTION DETAIL 276 A,	6-5-67

REVISIONS

9-15-67

11-10-67

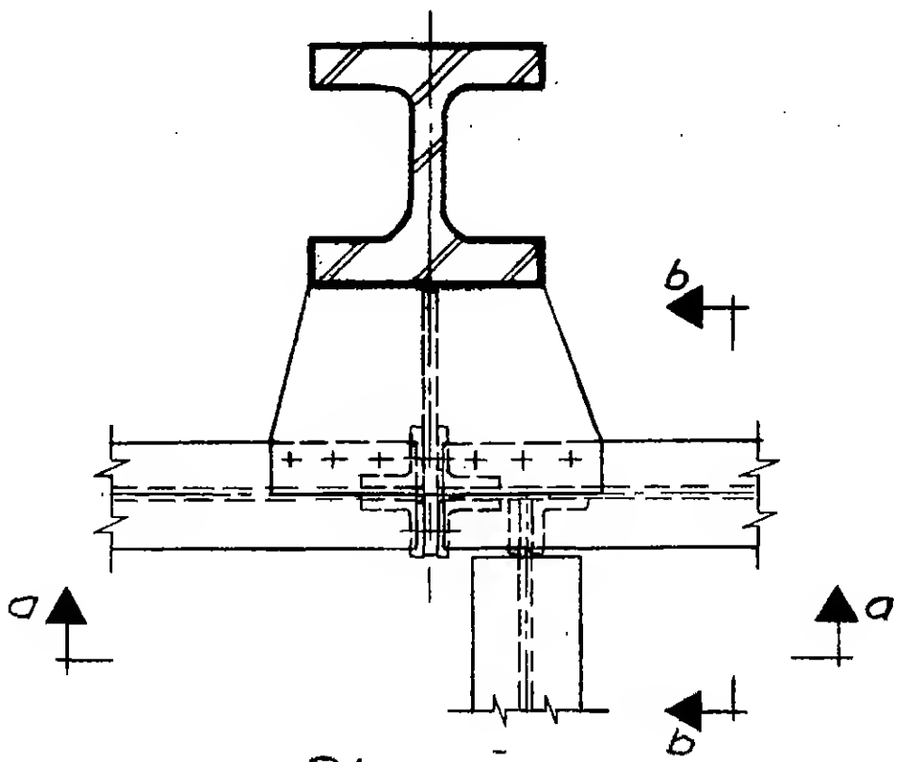

Plan

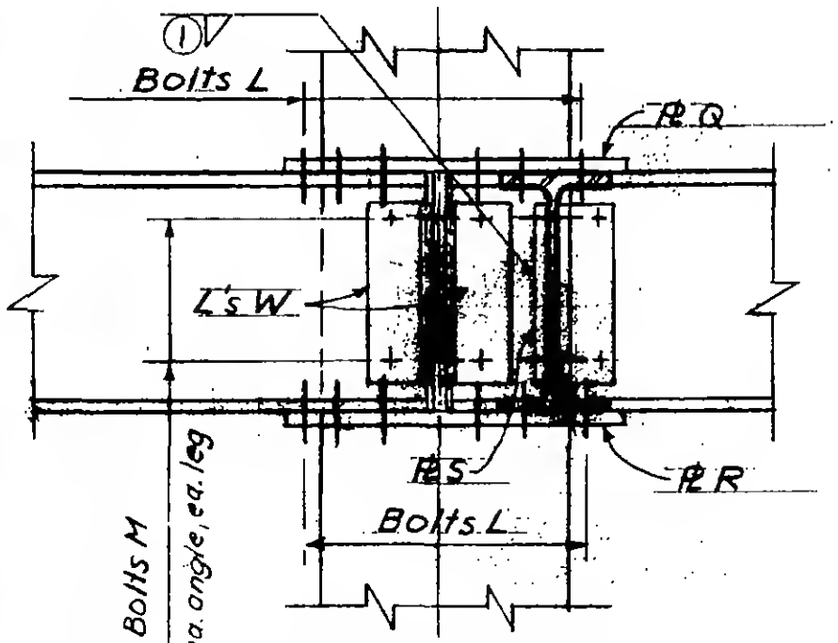

Section a-a

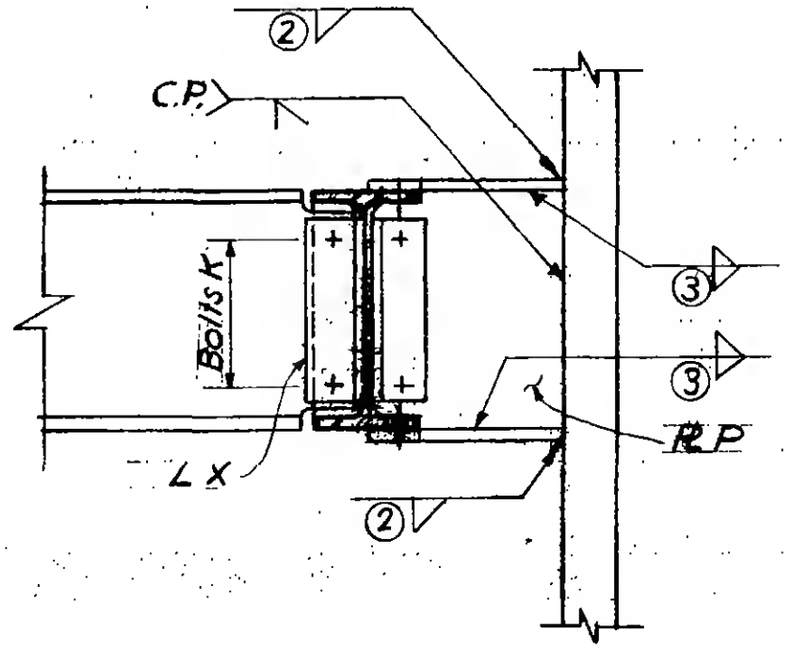

Section b-b

LESLIE E. ROBERTSON LICENSED PROFESSIONAL ENGINEER No. 34360 REGISTERED BY THE STATE OF NEW YORK

6-AB1-83