SKILLING - HELLE - CHRISTIANSEN - ROBERTSON Structural & Civil Engineers

PROJECT THE WORLD TRADE CENTER | TITLE CONNECTION DETAIL 283 P, R, U & V | DATE 9-15-67

REVISIONS

10-2-67

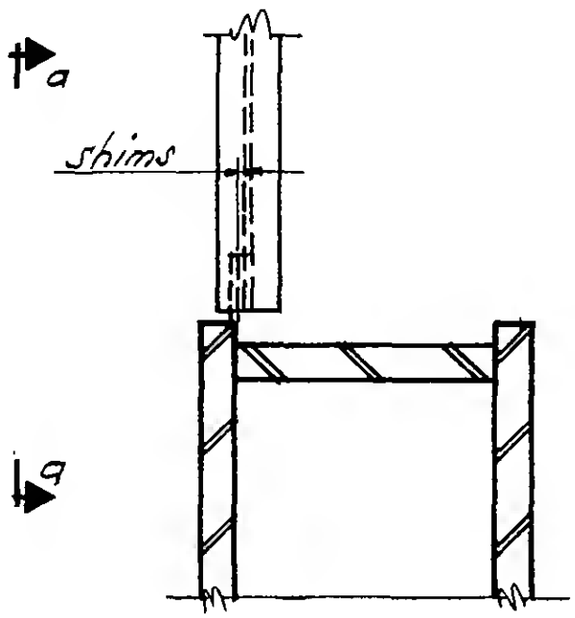

Plan

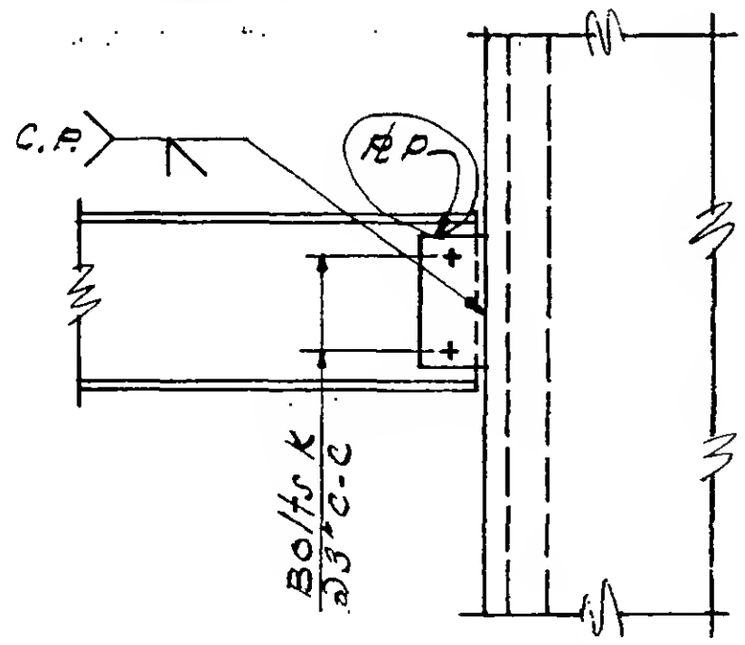

Section a-a

DETAIL 283 R & V

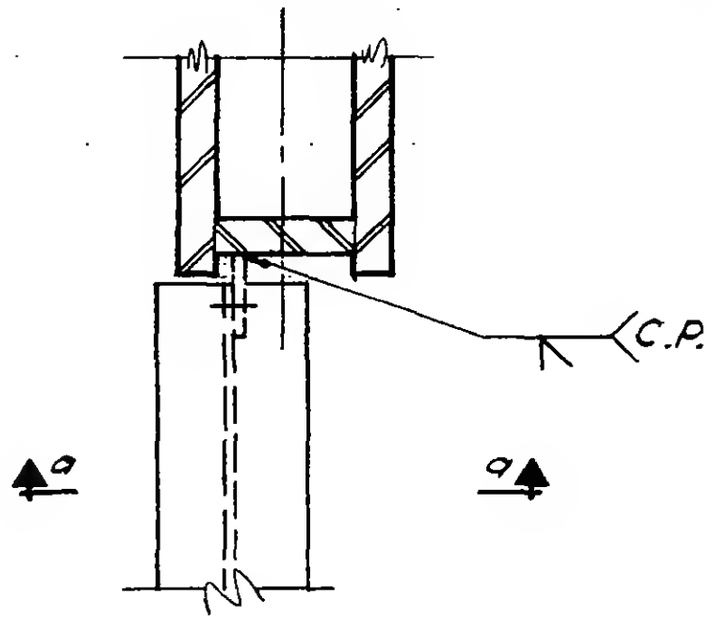

Plan

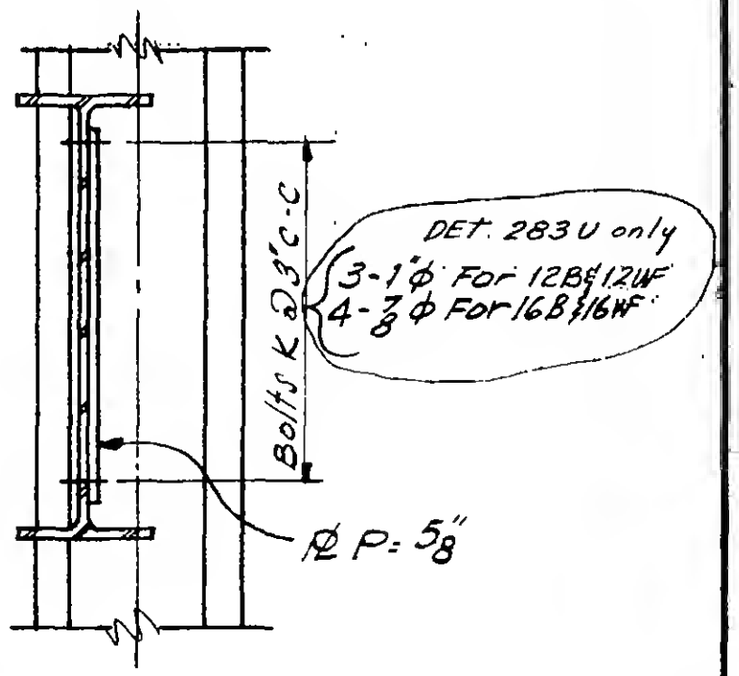

Section a-a

DETAIL 283 P & U

LICENSED PROFESSIONAL ENGINEER
LESLIE E. ROBERTSON
No. 34360
UNIVERSITY OF THE STATE OF NEW YORK

6-AB1-90.8