WORTHINGTON, SKILLING, HELLE & JACKSON — Civil & Structural Engineers

PROJECT: THE WORLD TRADE CENTER | TITLE: CONNECTION DETAIL 285 A | DATE: 5-22-67

REVISIONS
9-15-67
11-14-67

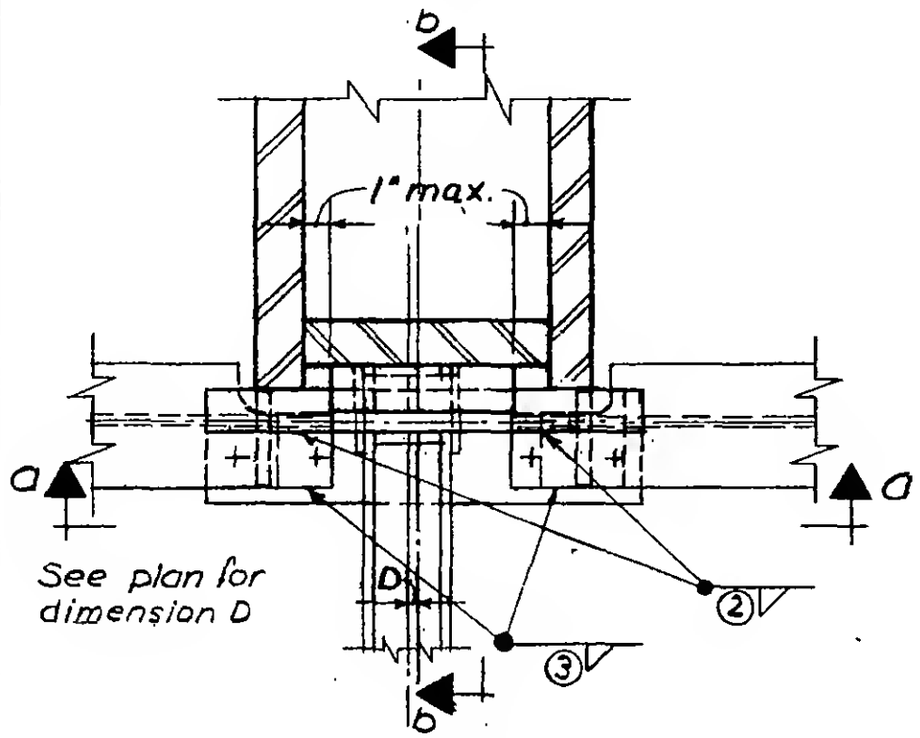

Plan

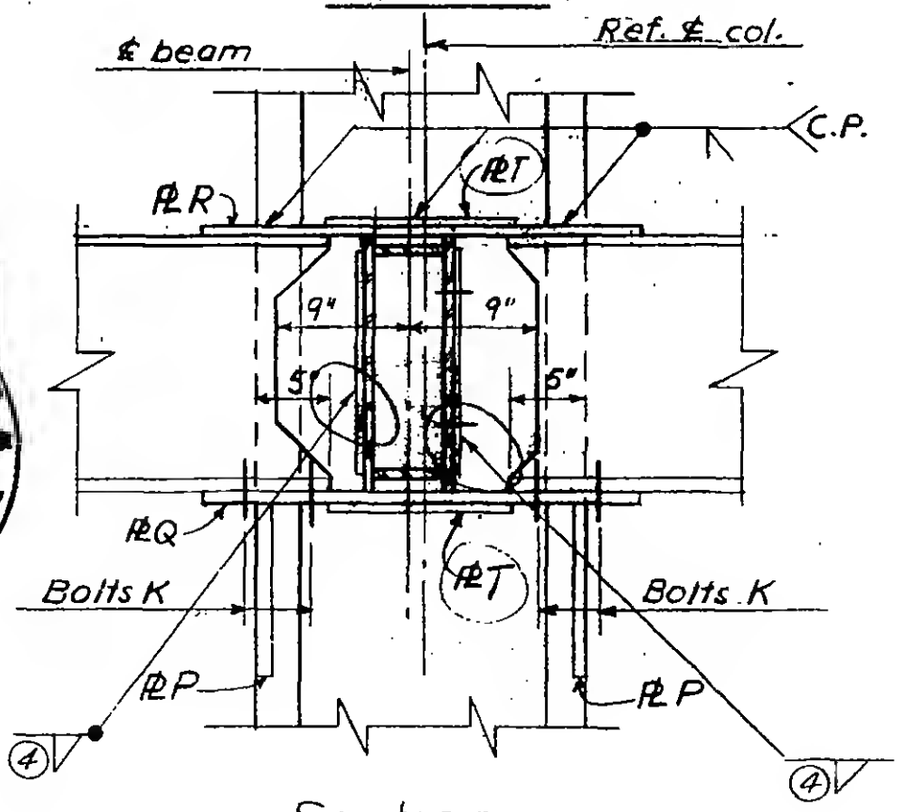

Section a-a

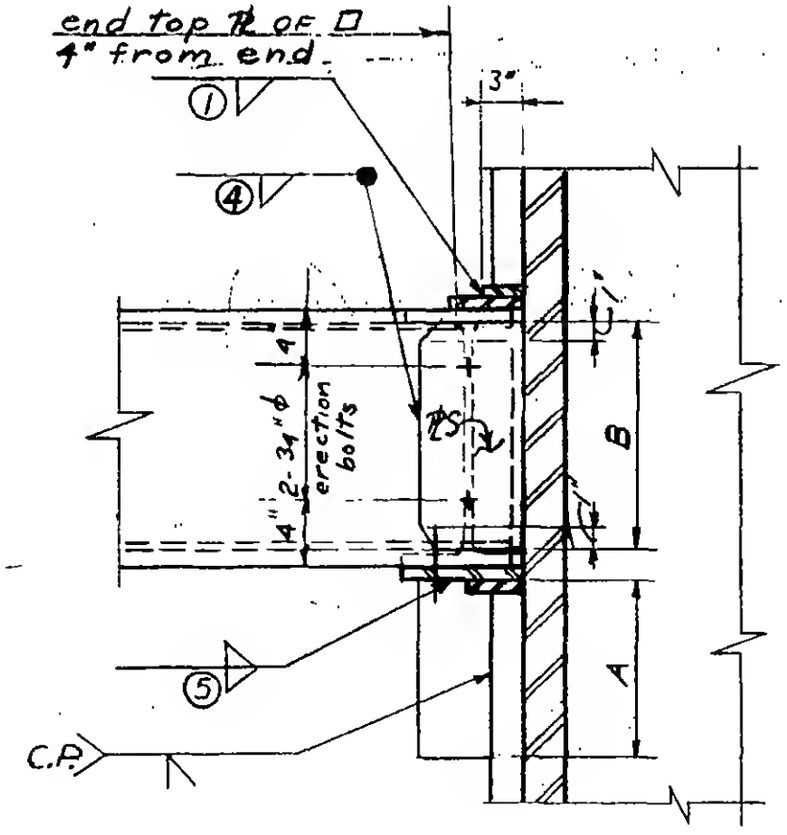

Section b-b

6-AB1-92