WORTHINGTON, SKILLING, HELLE & JACKSON — Civil & Structural Engineers

PROJECT THE WORLD TRADE CENTER | TITLE CONNECTION DETAIL 287 C, D, E, F, G, H | DATE 6-30-67

REVISIONS
7-28-67
8-5-67

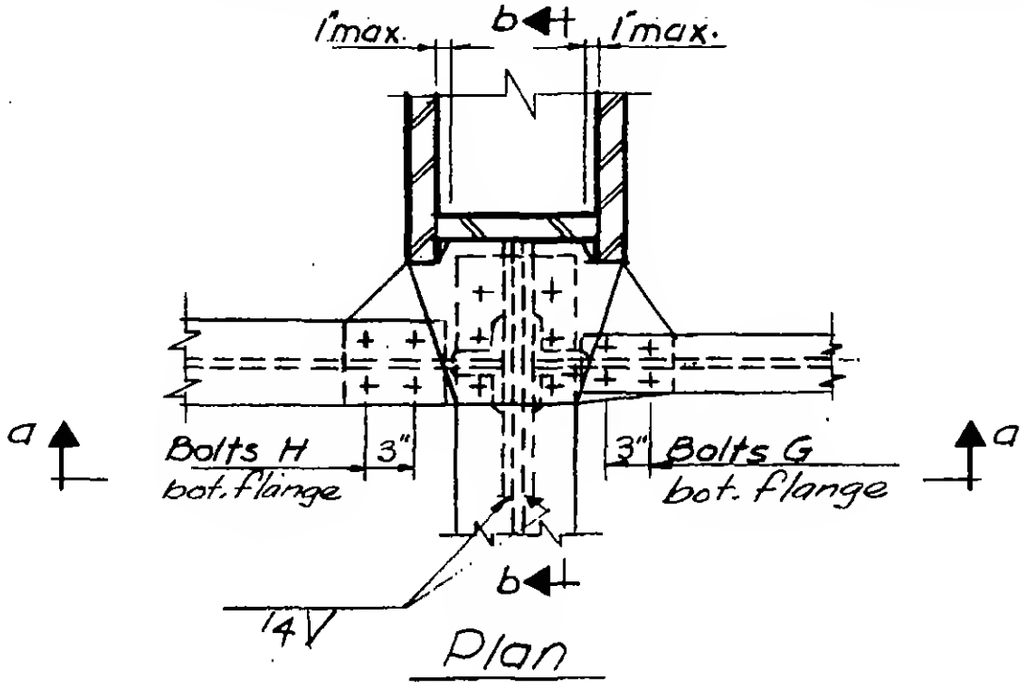

Plan

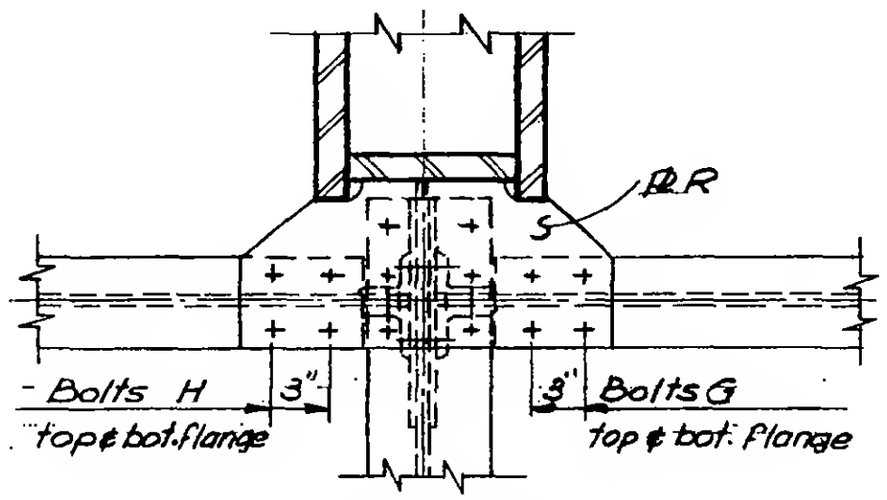

Plan
detail 287 G & H only

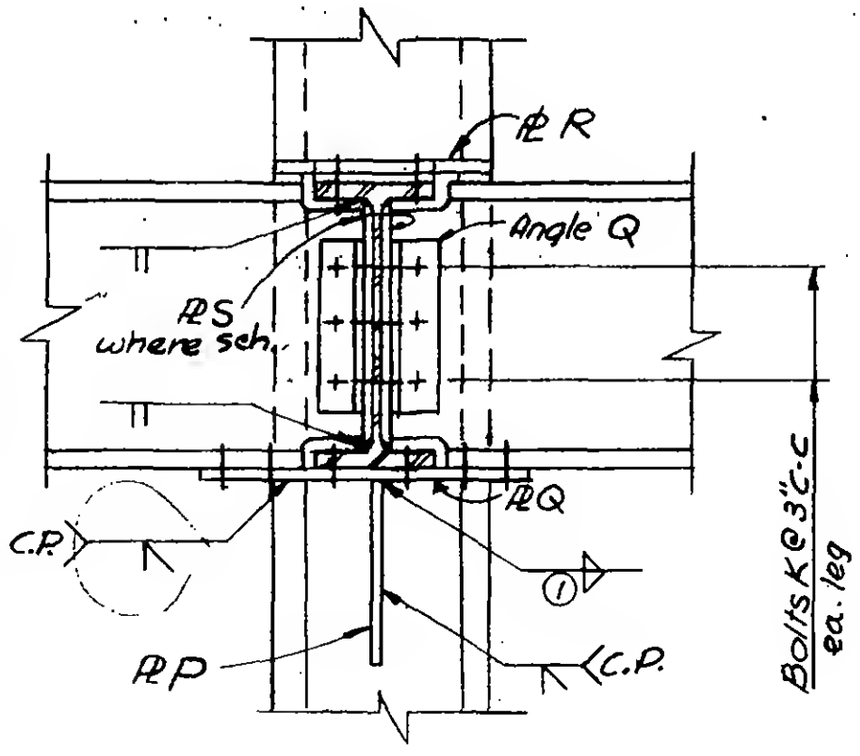

Section a-a

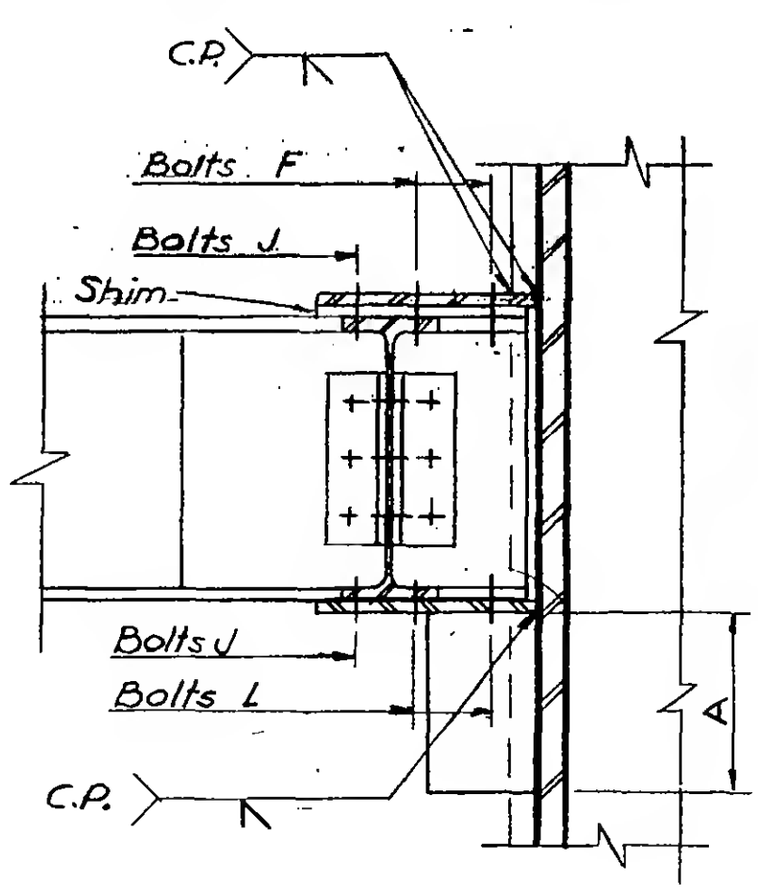

Section b-b

6-AB1-94.2

LICENSED PROFESSIONAL ENGINEER
LESLIE E. ROBERTSON
No. 34360
UNIVERSITY OF THE STATE OF NEW YORK